SLCS117C – NOVEMBER 1986 – REVISED NOVEMBER 2009

- **Push-Pull CMOS Output Drives Capacitive Loads Without Pullup Resistor, $I_O = \pm 8$ mA**
- **Very Low Power . . . 200 μW Typ at 5 V**
- **Fast Response Time . . . t_{PLH} = 2.7 μs Typ With 5-mV Overdrive**
- **Single Supply Operation . . . 3 V to 16 V**
  TLC3704M . . . 4 V to 16 V
- **On-Chip ESD Protection**

D, J, OR N PACKAGE
(TOP VIEW)

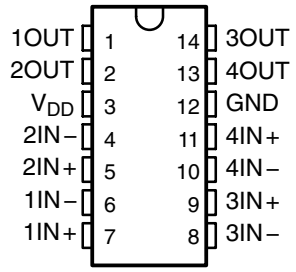

PW PACKAGE
(TOP VIEW)

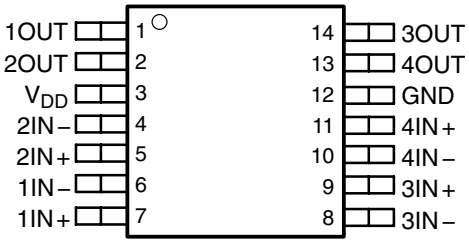

FK PACKAGE
(TOP VIEW)

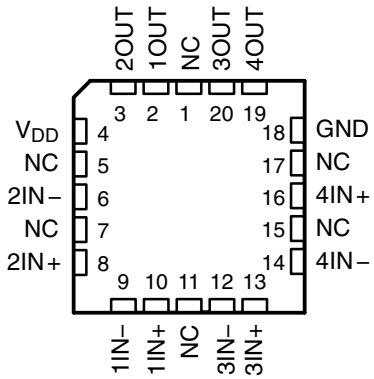

NC – No internal connection

description

The TLC3704 consists of four independent micropower voltage comparators designed to operate from a single supply and be compatible with modern HCMOS logic systems. They are functionally similar to the LM339 but use 1/20th the power for similar response times. The push-pull CMOS output stage drives capacitive loads directly without a power-consuming pullup resistor to achieve the stated response time. Eliminating the pullup resistor not only reduces power dissipation, but also saves board space and component cost. The output stage is also fully compatible with TTL requirements.

Texas Instruments LinCMOS™ process offers superior analog performance to standard CMOS processes. Along with the standard CMOS advantages of low power without sacrificing speed, high input impedance, and low bias currents, the LinCMOS process offers extremely stable input offset voltages with large differential input voltages. This characteristic makes it possible to build reliable CMOS comparators.

The TLC3704C is characterized for operation over the commercial temperature range of 0°C to 70°C. The TLC3704I is characterized for operation over the extended industrial temperature range of – 40°C to 85°C. The TLC3704M is characterized for operation over the full military temperature range of – 55°C to 125°C. The TLC3704Q is characterized for operation from – 40°C to 125°C.

symbol (each comparator)

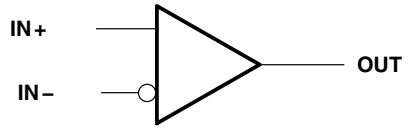

Please be aware that an important notice concerning availability, standard warranty, and use in critical applications of Texas Instruments semiconductor products and disclaimers thereto appears at the end of this data sheet.

LinCMOS is a trademark of Texas Instruments Incorporated.

PRODUCTION DATA information is current as of publication date. Products conform to specifications per the terms of Texas Instruments standard warranty. Production processing does not necessarily include testing of all parameters.

Copyright © 2009, Texas Instruments Incorporated

AVAILABLE OPTIONS

T_A	V_{IO}max at 25°C	PACKAGE				
		SMALL OUTLINE (D)	CERAMIC (FK)	CERAMIC DIP (J)	PLASTIC DIP (N)	TSSOP (PW)
0°C to 70°C	5 mV	TLC3704CD	—	—	TLC3704CN	TLC3704CPW
–40°C to 85°C	5 mV	TLC3704ID	—	—	TLC3704IN	TLC3704IPW
–55°C to 125°C	5 mV	TLC3704MD	TLC3704MFK	TLC3704MJ	—	—
–40°C to 125°C	5 mV	—	—	TLC3704QJ	—	—

The D and PW packages are available taped and reeled. Add R suffix to the device type (e.g., TLC3704CDR).

functional block diagram (each comparator)

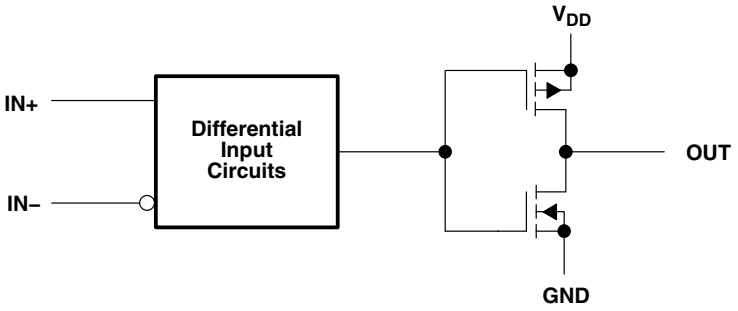

absolute maximum ratings over operating free-air temperature range (unless otherwise noted)†

Supply voltage range, V_{DD} (see Note 1) . . . . . –0.3 V to 18 V
Differential input voltage, V_{ID} (see Note 2) . . . . . ± 18 V
Input voltage range, V_I . . . . . –0.3 to V_{DD}
Output voltage range, V_O . . . . . –0.3 to V_{DD}
Input current, I_I . . . . . ±5 mA
Output current, I_O (each output) . . . . . ±20 mA
Total supply current into V_{DD} . . . . . 40 mA
Total current out of GND . . . . . 60 mA
Continuous total power dissipation . . . . . See Dissipation Rating Table
Operating free-air temperature range, T_A: TLC3704C . . . . . 0 to 70°C
TLC3704I . . . . . –40°C to 85°C
TLC3704M . . . . . –55°C to 125°C
TLC3704Q . . . . . –40°C to 125°C
Storage temperature range . . . . . –65°C to 150°C
Case temperature for 60 seconds: FK package . . . . . 260°C
Lead temperature 1,6 mm (1/16 inch) from case for 10 seconds: D or N package . . . . . 260°C
Lead temperature 1,6 mm (1/16 inch) from case for 60 seconds: J package . . . . . 300°C

† Stresses beyond those listed under “absolute maximum ratings” may cause permanent damage to the device. These are stress ratings only, and functional operation of the device at these or any other conditions beyond those indicated under “recommended operating conditions” is not implied. Exposure to absolute-maximum-rated conditions for extended periods may affect device reliability.

NOTES: 1. All voltage values, except differential voltages, are with respect to network ground.
2. Differential voltages are at IN+ with respect to IN–.

DISSIPATION RATING TABLE

PACKAGE	$T_A \leq 25°C$ POWER RATING	DERATING FACTOR ABOVE $T_A = 25°C$	$T_A = 70°C$ POWER RATING	$T_A = 85°C$ POWER RATING	$T_A = 125°C$ POWER RATING
D	950 mW	7.6 mW/°C	608 mW	494 mW	N/A
FK	1375 mW	11.0 mW/°C	880 mW	715 mW	275 mW
J	1375 mW	11.0 mW/°C	880 mW	715 mW	275 mW
N	1150 mW	9.2 mW/°C	736 mW	598 mW	N/A
PW	675 mW	5.4 mW/°C	432 mW	351 mW	N/A

recommended operating conditions

	TLC3704C			UNIT
	MIN	NOM	MAX	
Supply voltage, V_{DD}	3	5	16	V
Common-mode input voltage, V_{IC}	– 0.2		V_{DD} – 1.5	V
High-level output current, I_{OH}			– 20	mA
Low-level output current, I_{OL}			20	mA
Operating free-air temperature, T_A	0		70	°C

electrical characteristics at specified operating free-air temperature, V_{DD} = 5 V (unless otherwise noted)

PARAMETER		TEST CONDITIONS†		T_A	TLC3704C MIN	TLC3704C TYP	TLC3704C MAX	UNIT
V_{IO}	Input offset voltage	V_{DD} = 5 V to 10 V, $V_{IC} = V_{ICR}$min,	See Note 3	25°C		1.2	5	mV
				0°C to 70°C			6.5	
I_{IO}	Input offset current	V_{IC} = 2.5 V		25°C		1		pA
				70°C			0.3	nA
I_{IB}	Input bias current	V_{IC} = 2.5 V		25°C		5		pA
				70°C			0.6	nA
V_{ICR}	Common-mode input voltage range			25°C	0 to V_{DD} – 1			V
				0°C to 70°C	0 to V_{DD} – 1.5			
CMRR	Common-mode rejection ratio	$V_{IC} = V_{ICR}$min		25°C		84		dB
				70°C		84		
				0°C		84		
k_{SVR}	Supply-voltage rejection ratio	V_{DD} = 5 V to 10 V		25°C		85		dB
				70°C		85		
				0°C		85		
V_{OH}	High-level output voltage	V_{ID} = 1 V,	I_{OH} = –4 mA	25°C	4.5	4.7		V
				70°C	4.3			
V_{OL}	Low-level output voltage	V_{ID} = –1 V,	I_{OH} = 4 mA	25°C		210	300	mV
				70°C			375	
I_{DD}	Supply current (all four comparators)	Outputs low,	No load	25°C		35	80	µA
				0°C to 70°C			100	

† All characteristics are measured with zero common-mode voltage unless otherwise noted.
NOTE 3: The offset voltage limits given are the maximum values required to drive the output up to 4.5 V or down to 0.3 V.

recommended operating conditions

	TLC3704I			UNIT
	MIN	NOM	MAX	
Supply voltage, V_{DD}	3	5	16	V
Common-mode input voltage, V_{IC}	– 0.2		V_{DD} – 1.5	V
High-level output current, I_{OH}			– 20	mA
Low-level output current, I_{OL}			20	mA
Operating free-air temperature, T_A	– 40		85	°C

electrical characteristics at specified operating free-air temperature, V_{DD} = 5 V, V_{IC} = 0 (unless otherwise noted)

PARAMETER		TEST CONDITIONS	T_A	TLC3704I			UNIT
				MIN	TYP	MAX	
V_{IO}	Input offset voltage	V_{DD} = 5 V to 10 V, V_{IC} = V_{ICR}min, See Note 3	25°C		1.2	5	mV
			–40°C to 85°C			7	
I_{IO}	Input offset current	V_{IC} = 2.5 V	25°C		1		pA
			85°C			1	nA
I_{IB}	Input bias current	V_{IC} = 2.5 V	25°C		5		pA
			85°C			2	nA
V_{ICR}	Common-mode input voltage range		25°C	0 to V_{DD} – 1			V
			–40°C to 85°C	0 to V_{DD} – 1.5			
CMRR	Common-mode rejection ratio	V_{IC} = V_{ICR}min	25°C		84		dB
			85°C		84		
			–40°C		83		
k_{SVR}	Supply-voltage rejection ratio	V_{DD} = 5 V to 10 V	25°C		85		dB
			85°C		85		
			–40°C		83		
V_{OH}	High-level output voltage	V_{ID} = 1 V, I_{OH} = –4 mA	25°C	4.5	4.7		V
			85°C	4.3			
V_{OL}	Low-level output voltage	V_{ID} = –1 V, I_{OH} = 4 mA	25°C		210	300	mV
			85°C			400	
I_{DD}	Supply current (all four comparators)	Outputs low, No load	25°C		35	80	µA
			–40°C to 85°C			125	

NOTE 3: The offset voltage limits given are the maximum values required to drive the output up to 4.5 V or down to 0.3 V.

recommended operating conditions

	TLC3704M			UNIT
	MIN	NOM	MAX	
Supply voltage, V_{DD}	4	5	16	V
Common-mode input voltage, V_{IC}	0		V_{DD} – 1.5	V
High-level output current, I_{OH}			– 20	mA
Low-level output current, I_{OL}			20	mA
Operating free-air temperature, T_A	– 55		125	°C

electrical characteristics at specified operating free-air temperature, V_{DD} = 5 V, V_{IC} = 0 (unless otherwise noted)

PARAMETER		TEST CONDITIONS		T_A	TLC3704M			UNIT
					MIN	TYP	MAX	
V_{IO}	Input offset voltage	V_{DD} = 5 V to 10 V, V_{IC} = V_{ICR}min,	See Note 3	25°C		1.2	5	mV
				–55°C to 125°C			10	
I_{IO}	Input offset current	V_{IC} = 2.5 V		25°C		1		pA
				125°C			15	nA
I_{IB}	Input bias current	V_{IC} = 2.5 V		25°C		5		pA
				125°C			30	nA
V_{ICR}	Common-mode input voltage range			25°C	0 to V_{DD} – 1			V
				–55°C to 125°C	0 to V_{DD} – 1.5			
CMRR	Common-mode rejection ratio	V_{IC} = V_{ICR}min		25°C		84		dB
				125°C		83		
				–55°C		82		
k_{SVR}	Supply-voltage rejection ratio	V_{DD} = 5 V to 10 V		25°C		85		dB
				125°C		85		
				–55°C		82		
V_{OH}	High-level output voltage	V_{ID} = 1 V,	I_{OH} = –4 mA	25°C	4.5	4.7		V
				125°C	4.2			
V_{OL}	Low-level output voltage	V_{ID} = –1 V,	I_{OH} = 4 mA	25°C		210	300	mV
				125°C			500	
I_{DD}	Supply current (all four comparators)	Outputs low,	No load	25°C		35	80	µA
				–55°C to 125°C			175	

NOTE 3: The offset voltage limits given are the maximum values required to drive the output up to 4.5 V or down to 0.3 V.

recommended operating conditions

	TLC3704Q			UNIT
	MIN	NOM	MAX	
Supply voltage, V_{DD}	3	5	16	V
Common-mode input voltage, V_{IC}	−0.2		V_{DD} − 1.5	V
High-level output current, I_{OH}			− 20	mA
Low-level output current, I_{OL}			20	mA
Operating free-air temperature, T_A	− 40		125	°C

electrical characteristics at specified operating free-air temperature, V_{DD} = 5 V, V_{IC} = 0 (unless otherwise noted)

PARAMETER		TEST CONDITIONS	T_A	TLC3704Q			UNIT
				MIN	TYP	MAX	
V_{IO}	Input offset voltage	V_{DD} = 5 V to 10 V, V_{IC} = V_{ICR}min, See Note 3	25°C		1.2	5	mV
			−40°C to 125°C			7	
I_{IO}	Input offset current	V_{IC} = 2.5 V	25°C		1		pA
			125°C			15	nA
I_{IB}	Input bias current	V_{IC} = 2.5 V	25°C		5		pA
			125°C			30	nA
V_{ICR}	Common-mode input voltage range		25°C	0 to V_{DD} − 1			V
			−40°C to 125°C	0 to V_{DD} − 1.5			
CMRR	Common-mode rejection ratio	V_{IC} = V_{ICR}min	25°C		84		dB
			125°C		83		
			−40°C		83		
k_{SVR}	Supply-voltage rejection ratio	V_{DD} = 5 V to 10 V	25°C		85		dB
			125°C		85		
			−40°C		83		
V_{OH}	High-level output voltage	V_{ID} = 1 V, I_{OH} = −4 mA	25°C	4.5	4.7		V
			125°C	4.2			
V_{OL}	Low-level output voltage	V_{ID} = −1 V, I_{OH} = 4 mA	25°C		210	300	mV
			125°C			500	
I_{DD}	Supply current (all four comparators)	Outputs low, No load	25°C		35	80	µA
			−40°C to 125°C			175	

NOTE 3: The offset voltage limits given are the maximum values required to drive the output up to 4.5 V or down to 0.3 V.

switching characteristics, V_{DD} = 5 V, T_A = 25°C

PARAMETER		TEST CONDITIONS		TLC3704C, TLC3704I TLC3704M, TLC3704Q			UNIT
				MIN	TYP	MAX	
t_{PLH}	Propagation delay time, low-to-high-level output†	f = 10 kHz, C_L = 50 pF	Overdrive = 2 mV		4.5		µs
			Overdrive = 5 mV		2.7		
			Overdrive = 10 mV		1.9		
			Overdrive = 20 mV		1.4		
			Overdrive = 40 mV		1.1		
		V_I = 1.4-V step at IN+			1.1		
t_{PHL}	Propagation delay time, high-to-low-level output†	f = 10 kHz, C_L = 50 pF	Overdrive = 2 mV		4		µs
			Overdrive = 5 mV		2.3		
			Overdrive = 10 mV		1.5		
			Overdrive = 20 mV		0.95		
			Overdrive = 40 mV		0.65		
		V_I = 1.4-V step at IN+			0.15		
t_f	Fall time	f = 10 kHz, C_L = 50 pF	Overdrive = 50 mV		50		ns
t_r	Rise time	f = 10 kHz, C_L = 50 pF	Overdrive = 50 mV		125		ns

† Simultaneous switching of inputs causes degradation in output response.

PRINCIPLES OF OPERATION

LinCMOS process

The LinCMOS process is a linear polysilicon-gate CMOS process. Primarily designed for single-supply applications, LinCMOS products facilitate the design of a wide range of high-performance analog functions from operational amplifiers to complex mixed-mode converters.

This short guide is intended to answer the most frequently asked questions related to the quality and reliability of LinCMOS products. Direct further questions to the nearest TI field sales office.

electrostatic discharge

CMOS circuits are prone to gate oxide breakdown when exposed to high voltages even if the exposure is only for very short periods of time. Electrostatic discharge (ESD) is one of the most common causes of damage to CMOS devices. It can occur when a device is handled without proper consideration for environmental electrostatic charges, e.g., during board assembly. If a circuit in which one amplifier from a dual op amp is being used and the unused pins are left open, high voltages tends to develop. If there is no provision for ESD protection, these voltages may eventually punch through the gate oxide and cause the device to fail. To prevent voltage buildup, each pin is protected by internal circuitry.

Standard ESD-protection circuits safely shunt the ESD current by providing a mechanism whereby one or more transistors break down at voltages higher than the normal operating voltages but lower than the breakdown voltage of the input gate. This type of protection scheme is limited by leakage currents which flow through the shunting transistors during normal operation after an ESD voltage has occurred. Although these currents are small, on the order of tens of nanoamps, CMOS amplifiers are often specified to draw input currents as low as tens of picoamps.

To overcome this limitation, TI design engineers developed the patented ESD-protection circuit shown in Figure 1. This circuit can withstand several successive 2-kV ESD pulses, while reducing or eliminating leakage currents that may be drawn through the input pins. A more detailed discussion of the operation of the TI ESD-protection circuit is presented on the next page.

All input and output pins on LinCMOS and Advanced LinCMOS products have associated ESD-protection circuitry that undergoes qualification testing to withstand 2000 V discharged from a 100-pF capacitor through a 1500-Ω resistor (human body model) and 200 V from a 100-pF capacitor with no current-limiting resistor (charged device model). These tests simulate both operator and machine handling of devices during normal test and assembly operations.

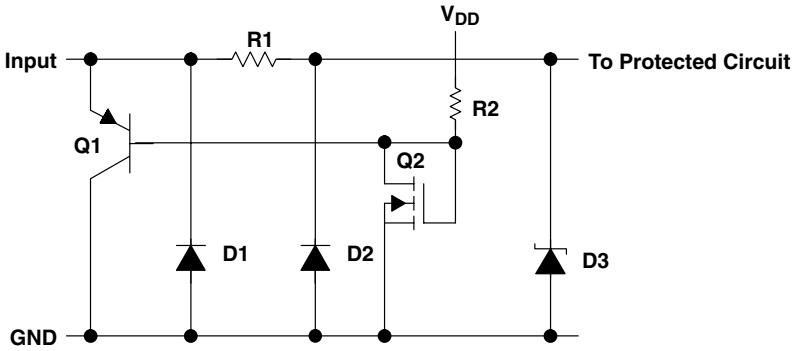

Figure 1. LinCMOS ESD-Protection Schematic

PRINCIPLES OF OPERATION

input protection circuit operation

Texas Instruments patented protection circuitry allows for both positive- and negative-going ESD transients. These transients are characterized by extremely fast rise times and usually low energies, and can occur both when the device has all pins open and when it is installed in a circuit.

positive ESD transients

Initial positive charged energy is shunted through Q1 to V_{SS}. Q1 turns on when the voltage at the input rises above the voltage on the V_{DD} pin by a value equal to the V_{BE} of Q1. The base current increases through R2 with input current as Q1 saturates. The base current through R2 forces the voltage at the drain and gate of Q2 to exceed its threshold level ($V_T \sim 22$ to 26 V) and turn Q2 on. The shunted input current through Q1 to V_{SS} is now shunted through the n-channel enhancement-type MOSFET Q2 to V_{SS}. If the voltage on the input pin continues to rise, the breakdown voltage of the zener diode D3 is exceeded, and all remaining energy is dissipated in R1 and D3. The breakdown voltage of D3 is designed to be 24 to 27 V, which is well below the gate-oxide voltage of the circuit to be protected.

negative ESD transients

The negative charged ESD transients are shunted directly through D1. Additional energy is dissipated in R1 and D2 as D2 becomes forward biased. The voltage seen by the protected circuit is – 0.3 V to –1 V (the forward voltage of D1 and D2).

circuit-design considerations

LinCMOS products are being used in actual circuit environments that have input voltages that exceed the recommended common-mode input voltage range and activate the input protection circuit. Even under normal operation, these conditions occur during circuit power up or power down, and in many cases, when the device is being used for a signal conditioning function. The input voltages can exceed V_{ICR} and not damage the device only if the inputs are current limited. The recommended current limit shown on most product data sheets is ±5 mA. Figures 2 and 3 show typical characteristics for input voltage versus input current.

Normal operation and correct output state can be expected even when the input voltage exceeds the positive supply voltage. Again, the input current should be externally limited even though internal positive current limiting is achieved in the input protection circuit by the action of Q1. When Q1 is on, it saturates and limits the current to approximately 5-mA collector current by design. When saturated, Q1 base current increases with input current. This base current is forced into the V_{DD} pin and into the device I_{DD} or the V_{DD} supply through R2 producing the current limiting effects shown in Figure 2. This internal limiting lasts only as long as the input voltage is below the V_T of Q2.

When the input voltage exceeds the negative supply voltage, normal operation is affected and output voltage states may not be correct. Also, the isolation between channels of multiple devices (duals and quads) can be severely affected. External current limiting must be used since this current is directly shunted by D1 and D2 and no internal limiting is achieved. If normal output voltage states are required, an external input voltage clamp is required (see Figure 4).

PRINCIPLES OF OPERATION

circuit-design considerations (continued)

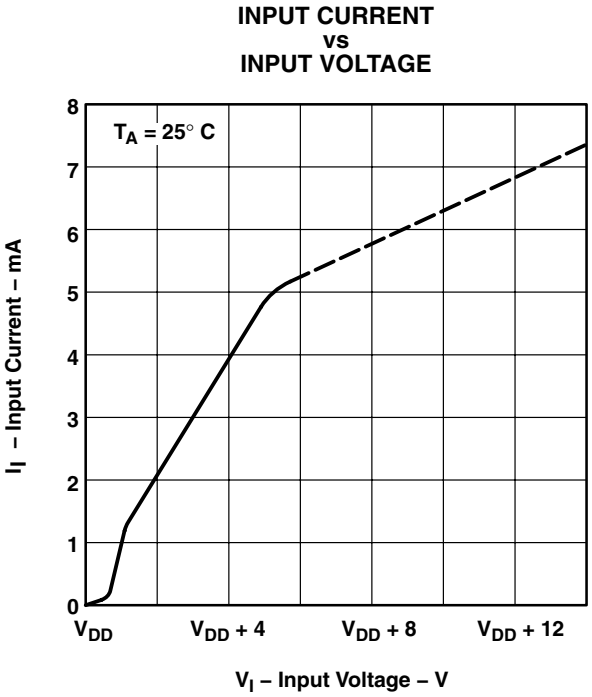

Figure 2

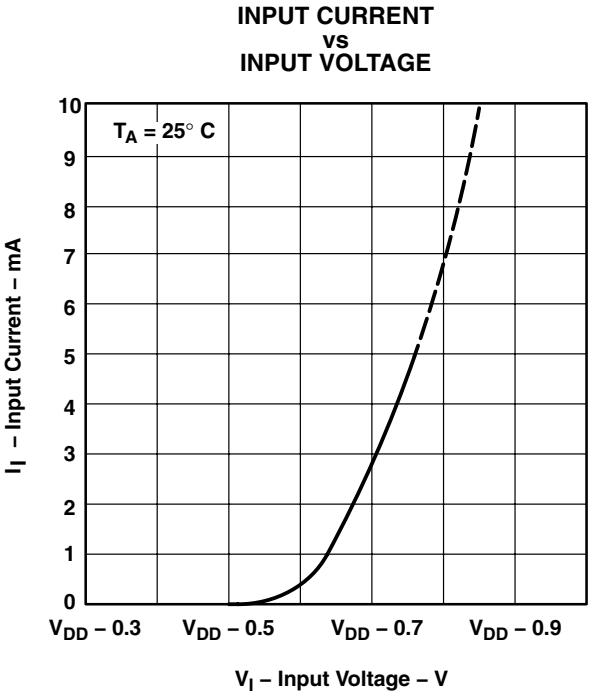

Figure 3

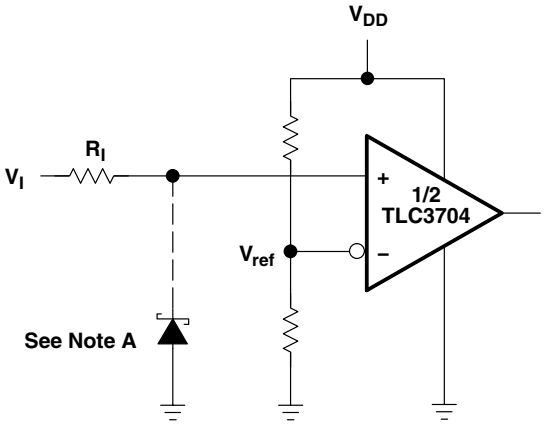

Positive Voltage Input Current Limit :

$$R_I = \frac{V_I - V_{DD} - 0.3\ V}{5\ mA}$$

Negative Voltage Input Current Limit :

$$R_I = \frac{-V_I - V_{DD} - (-0.3\ V)}{5\ mA}$$

NOTE A: If the correct input state is required when the negative input exceeds GND, a Schottky clamp is required.

Figure 4. Typical Input Current-Limiting Configuration for a LinCMOS Comparator

PARAMETER MEASUREMENT INFORMATION

The TLC3704 contains a digital output stage which, if held in the linear region of the transfer curve, can cause damage to the device. Conventional operational amplifier/comparator testing incorporates the use of a servo loop which is designed to force the device output to a level within this linear region. Since the servo-loop method of testing cannot be used, we offer the following alternatives for measuring parameters such as input offset voltage, common-mode rejection, etc.

To verify that the input offset voltage falls within the limits specified, the limit value is applied to the input as shown in Figure 5(a). With the noninverting input positive with respect to the inverting input, the output should be high. With the input polarity reversed, the output should be low.

A similar test can be made to verify the input offset voltage at the common-mode extremes. The supply voltages can be slewed as shown in Figure 5(b) for the V_{ICR} test, rather than changing the input voltages, to provide greater accuracy.

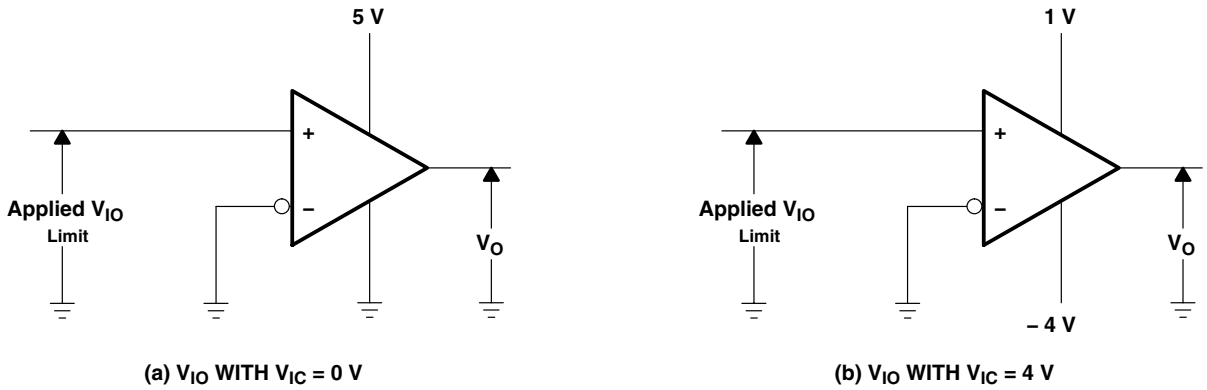

Figure 5. Method for Verifying That Input Offset Voltage Is Within Specified Limits

A close approximation of the input offset voltage can be obtained by using a binary search method to vary the differential input voltage while monitoring the output state. When the applied input voltage differential is equal, but opposite in polarity, to the input offset voltage, the output changes states.

Figure 6 illustrates a practical circuit for direct dc measurement of input offset voltage that does not bias the comparator in the linear region. The circuit consists of a switching mode servo loop in which IC1a generates a triangular waveform of approximately 20-mV amplitude. IC1b acts as a buffer, with C2 and R4 removing any residual d.c. offset. The signal is then applied to the inverting input of the comparator under test, while the noninverting input is driven by the output of the integrator formed by IC1c through the voltage divider formed by R8 and R9. The loop reaches a stable operating point when the output of the comparator under test has a duty cycle of exactly 50%, which can only occur when the incoming triangle wave is sliced symmetrically or when the voltage at the noninverting input exactly equals the input offset voltage.

Voltage divider R8 and R9 provides an increase in the input offset voltage by a factor of 100 to make measurement easier. The values of R5, R7, R8, and R9 can significantly influence the accuracy of the reading; therefore, it is suggested that their tolerance level be one percent or lower.

Measuring the extremely low values of input current requires isolation from all other sources of leakage current and compensation for the leakage of the test socket and board. With a good picoammeter, the socket and board leakage can be measured with no device in the socket. Subsequently, this open socket leakage value can be subtracted from the measurement obtained with a device in the socket to obtain the actual input current of the device.

PARAMETER MEASUREMENT INFORMATION

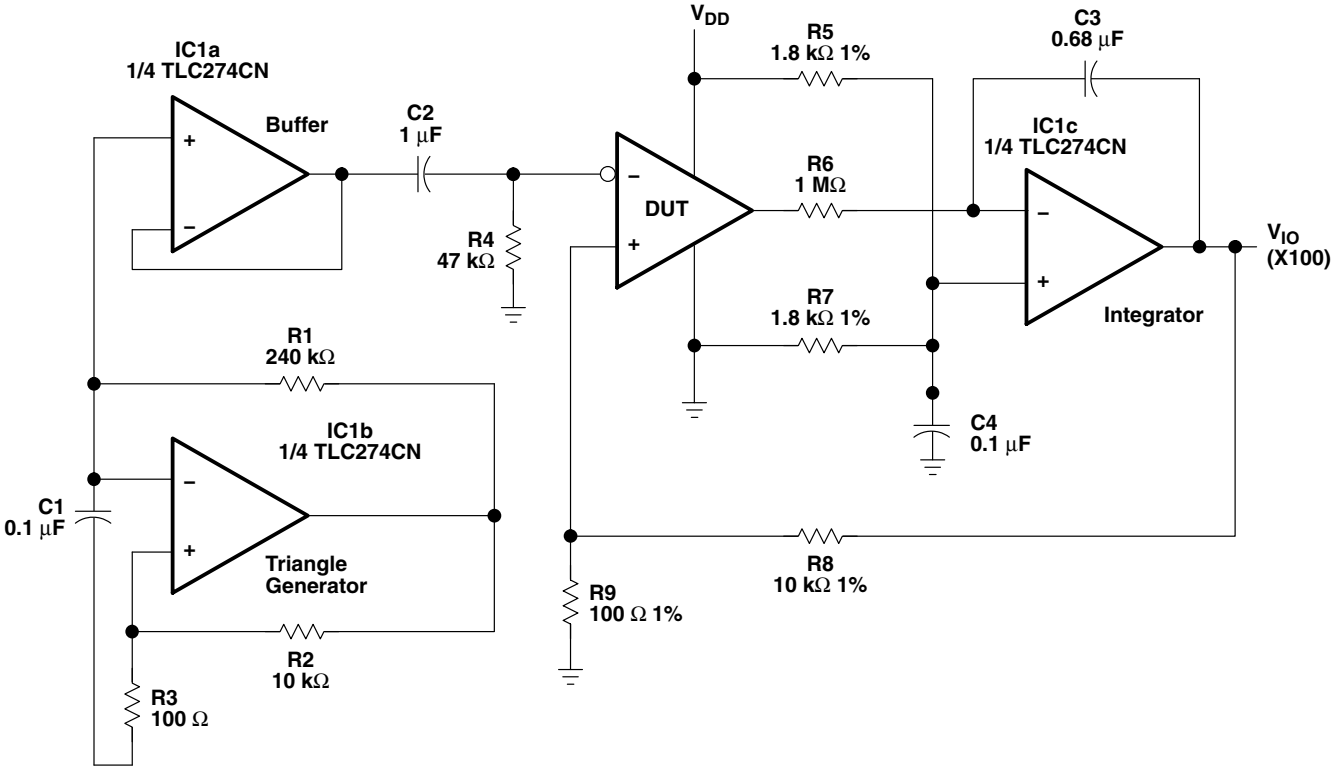

Figure 6. Circuit for Input Offset Voltage Measurement

Response time is defined as the interval between the application of an input step function and the instant when the output reaches 50% of its maximum value. Response time for the low-to-high-level output is measured from the leading edge of the input pulse, while response time for the high-to-low-level output is measured from the trailing edge of the input pulse. Response time measurement at low input signal levels can be greatly affected by the input offset voltage. The offset voltage should be balanced by the adjustment at the inverting input as shown in Figure 7, so that the circuit is just at the transition point. A low signal, for example 105-mV or 5-mV overdrive, causes the output to change state.

PARAMETER MEASUREMENT INFORMATION

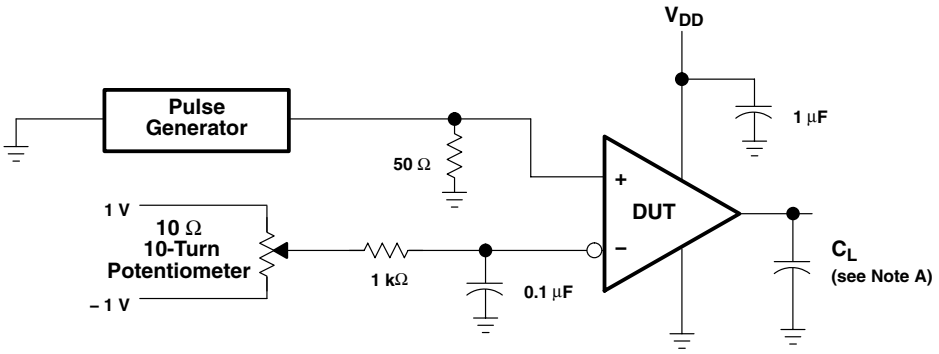

TEST CIRCUIT

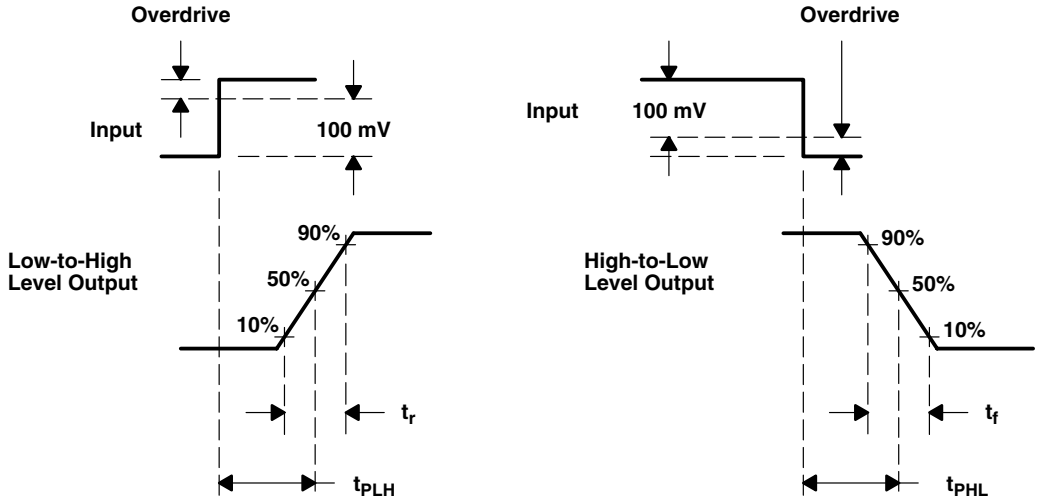

VOLTAGE WAVEFORMS

NOTE A: C_L includes probe and jig capacitance.

Figure 7. Response, Rise, and Fall Times Circuit and Voltage Waveforms

TYPICAL CHARACTERISTICS

Table of Graphs

			FIGURE
V_{IO}	Input offset voltage	Distribution	8
I_{IB}	Input bias current	vs Free-air temperature	9
CMRR	Common-mode rejection ratio	vs Free-air temperature	10
k_{SVR}	Supply-voltage rejection ratio	vs Free-air temperature	11
V_{OH}	High-level output current	vs Free-air temperature vs High-level output current	12 13
V_{OL}	Low-level output voltage	vs Low-level output current vs Free-air temperature	14 15
t_t	Output transition time	vs Load capacitance	16
	Supply current response to an output voltage transition		17
	Low-to-high-level output response for various input overdrives		18
	High-to-low-level output response for various input overdrives		19
t_{PLH}	Low-to-high-level output response time	vs Supply voltage	20
t_{PHL}	High-to-low-level output response time	vs Supply voltage	21
I_{DD}	Supply current	vs Frequency vs Supply voltage vs Free-air temperature	22 23 24

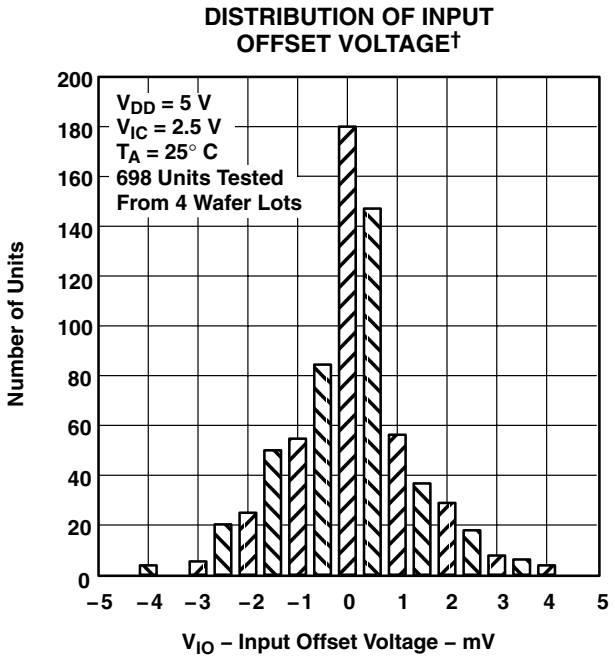

Figure 8

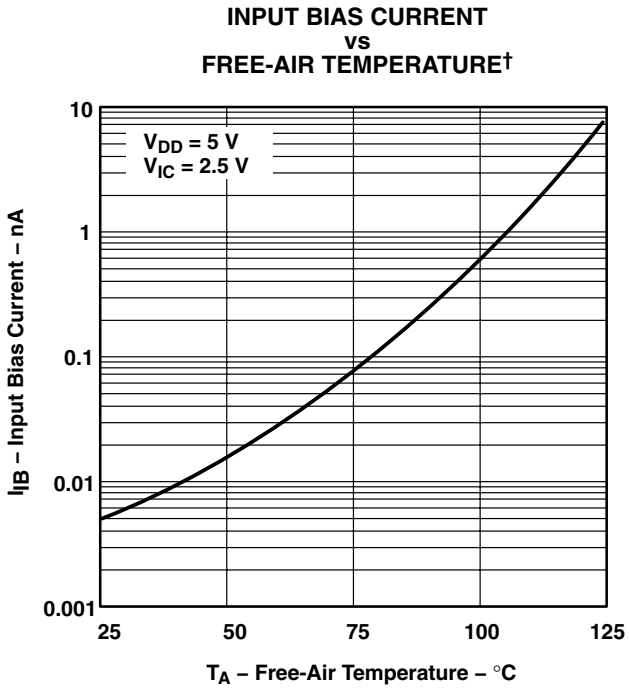

Figure 9

† Data at high and low temperatures are applicable only within the rated operating free-air temperature ranges of the various devices.

TYPICAL CHARACTERISTICS†

COMMON-MODE REJECTION RATIO vs FREE-AIR TEMPERATURE

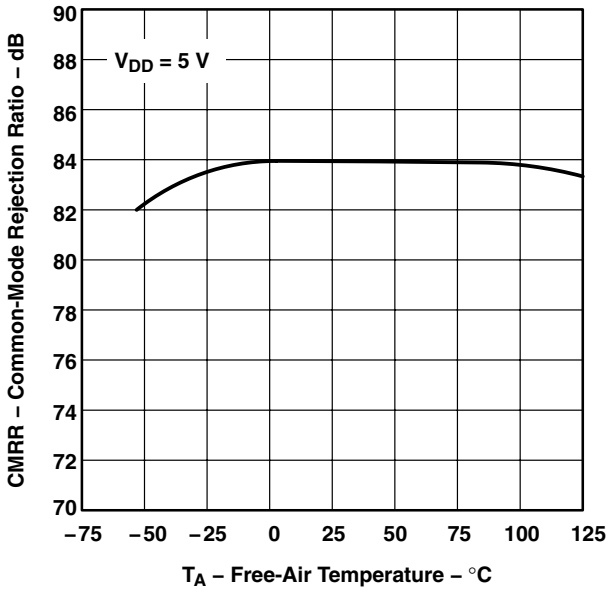

Figure 10

SUPPLY VOLTAGE REJECTION RATIO vs FREE-AIR TEMPERATURE

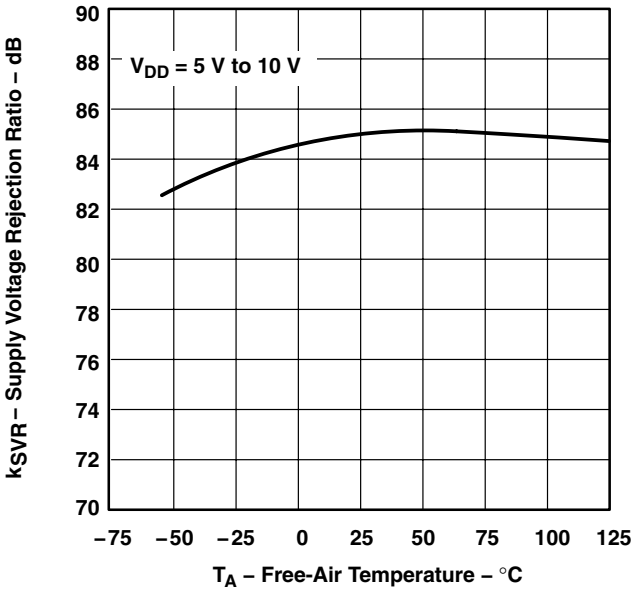

Figure 11

HIGH-LEVEL OUTPUT VOLTAGE vs FREE-AIR TEMPERATURE

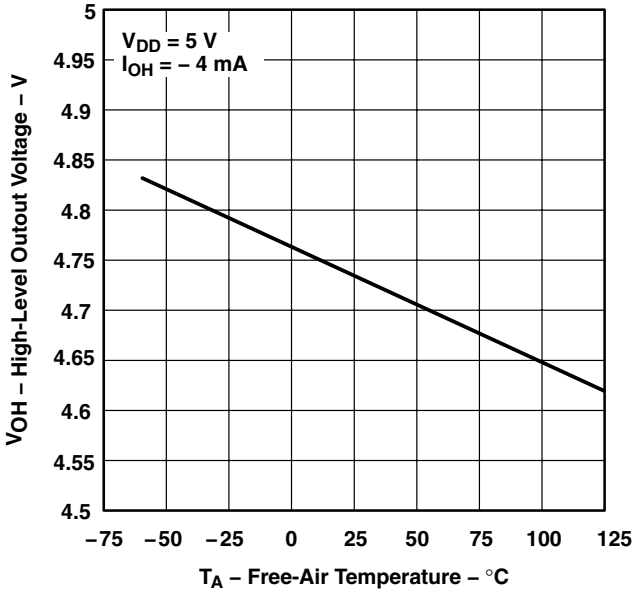

Figure 12

HIGH-LEVEL OUTPUT VOLTAGE vs HIGH-LEVEL OUTPUT CURRENT

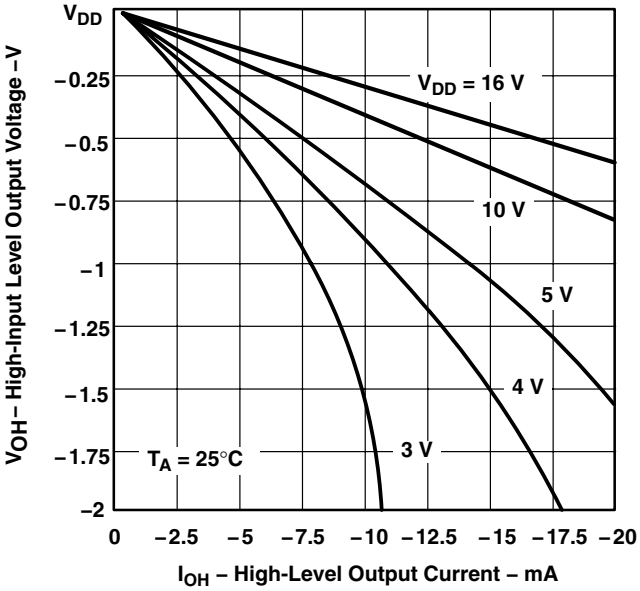

Figure 13

† Data at high and low temperatures are applicable only within the rated operating free-air temperature ranges of the various devices.

TYPICAL CHARACTERISTICS†

LOW-LEVEL OUTPUT VOLTAGE vs LOW-LEVEL OUTPUT CURRENT

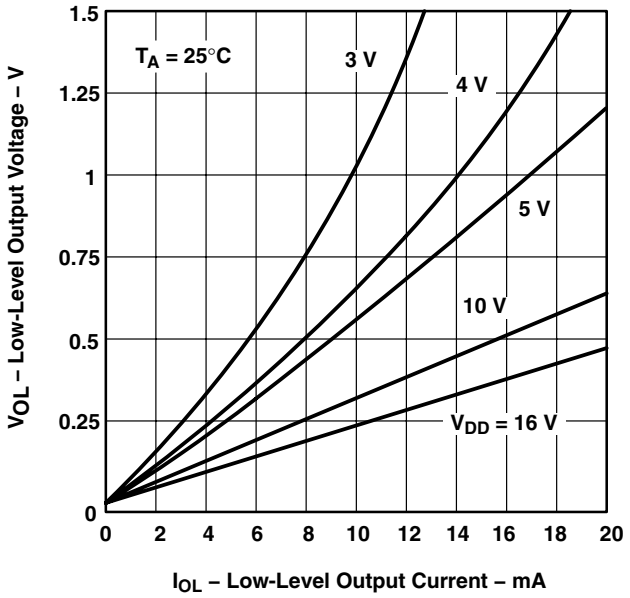

Figure 14

LOW-LEVEL OUTPUT VOLTAGE vs FREE-AIR TEMPERATURE

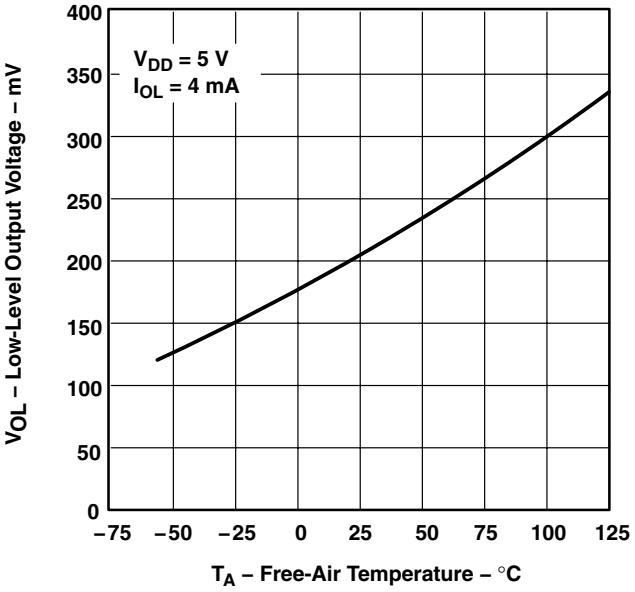

Figure 15

OUTPUT TRANSITION TIME vs LOAD CAPACITANCE

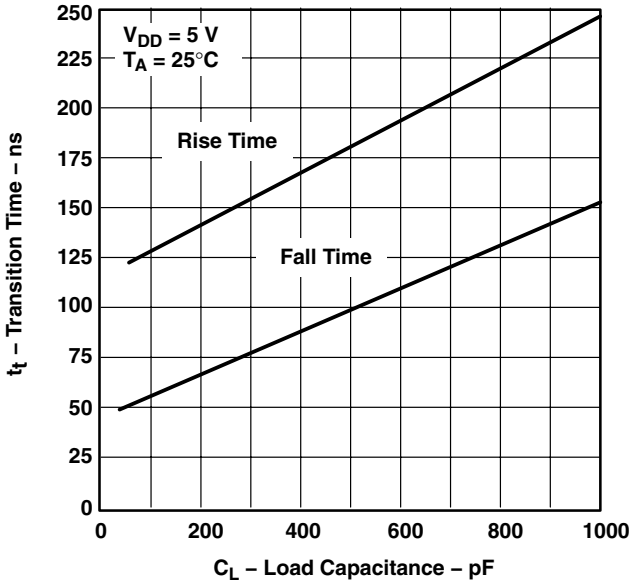

Figure 16

SUPPLY CURRENT RESPONSE TO AN OUTPUT VOLTAGE TRANSITION

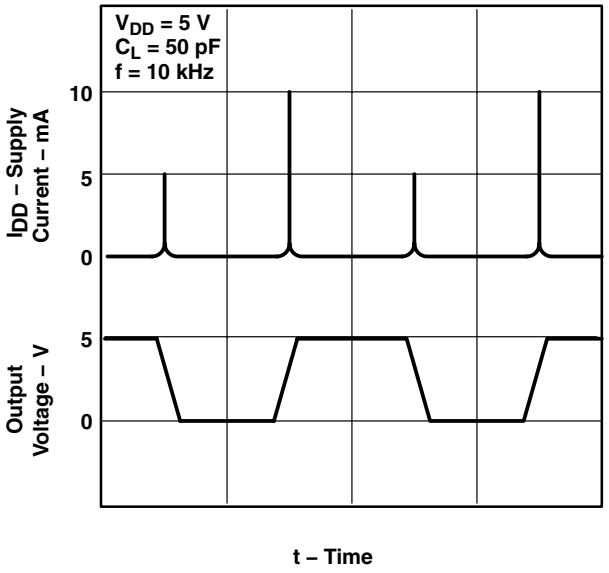

Figure 17

† Data at high and low temperatures are applicable only within the rated operating free-air temperature ranges of the various devices.

TYPICAL CHARACTERISTICS

LOW-TO-HIGH-LEVEL OUTPUT RESPONSE FOR VARIOUS INPUT OVERDRIVES

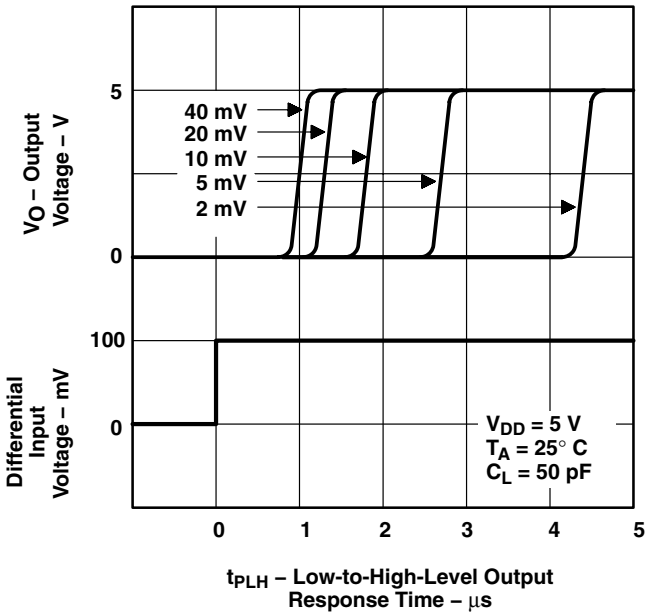

Figure 18

HIGH-TO-LOW-LEVEL OUTPUT RESPONSE FOR VARIOUS INPUT OVERDRIVES

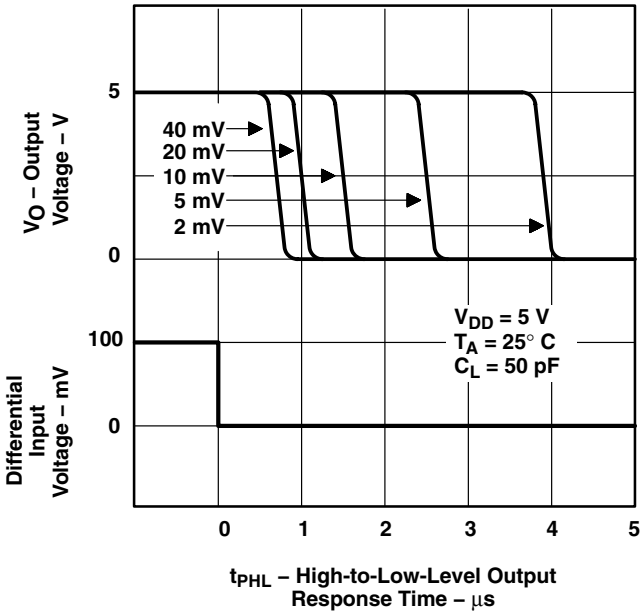

Figure 19

LOW-TO-HIGH-LEVEL OUTPUT RESPONSE TIME vs SUPPLY VOLTAGE

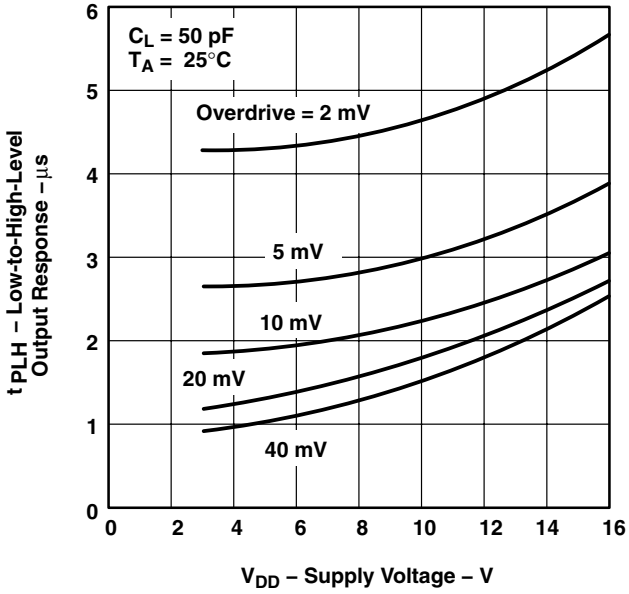

Figure 20

HIGH-TO-LOW-LEVEL OUTPUT RESPONSE TIME vs SUPPLY VOLTAGE

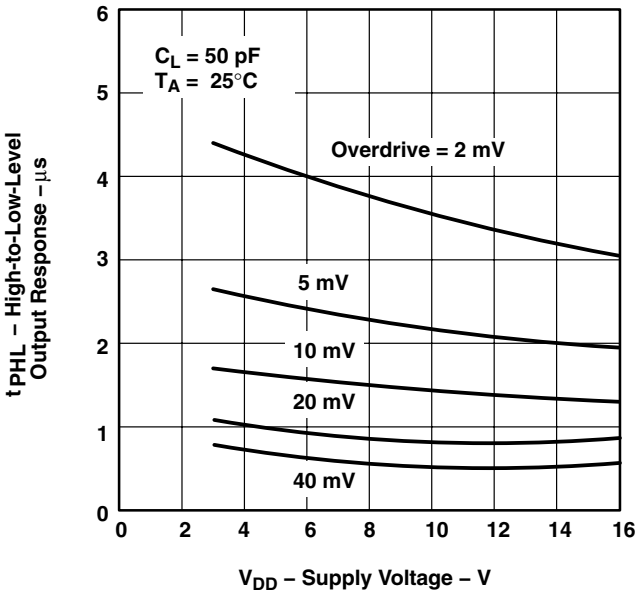

Figure 21

TYPICAL CHARACTERISTICS†

AVERAGE SUPPLY CURRENT (PER COMPARATOR) vs FREQUENCY

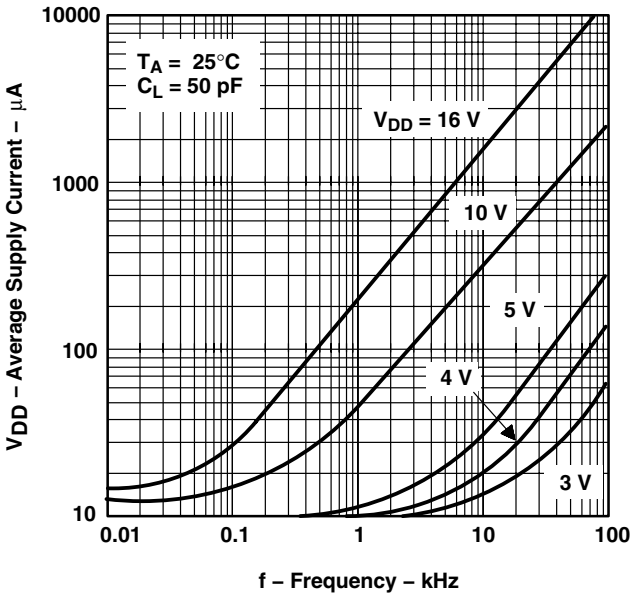

Figure 22

SUPPLY CURRENT vs SUPPLY VOLTAGE

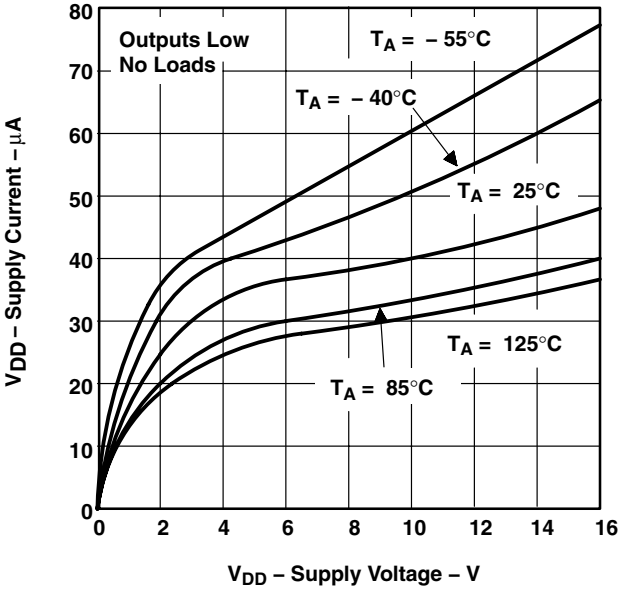

Figure 23

SUPPLY CURRENT vs FREE-AIR TEMPERATURE

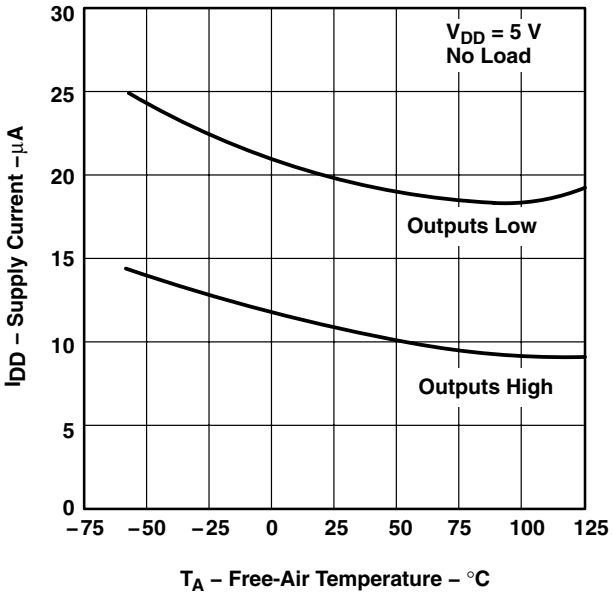

Figure 24

† Data at high and low temperatures are applicable only within the rated operating free-air temperature ranges of the various devices.

APPLICATION INFORMATION

The inputs should always remain within the supply rails in order to avoid forward biasing the diodes in the electrostatic discharge (ESD) protection structure. If either input exceeds this range, the device is not damaged as long as the input is limited to less than 5 mA. To maintain the expected output state, the inputs must remain within the common-mode range. For example, at 25°C with V_{DD} = 5 V, both inputs must remain between – 0.2 V and 4 V to ensure proper device operation. To ensure reliable operation, the supply should be decoupled with a capacitor (0.1 μF) that is positioned as close to the device as possible.

Output and supply current limitations should be watched carefully since the TLC3704 does not provide current protection. For example, each output can source or sink a maximum of 20 mA; however, the total current to ground can only be an absolute maximum of 60 mA. This prohibits sinking 20 mA from each of the four outputs simultaneously since the total current to ground would be 80 mA.

The TLC3704 has internal ESD-protection circuits that prevents functional failures at voltages up to 2000 V as tested under MIL-STD-883C, Method 3015.2; however, care should be exercised in handling these devices as exposure to ESD may result in the degradation of the device parametric performance.

Table of Applications

	FIGURE
Pulse-width-modulated motor speed controller	25
Enhanced supply supervisor	26
Two-phase nonoverlapping clock generator	27
Micropower switching regulator	28

APPLICATION INFORMATION

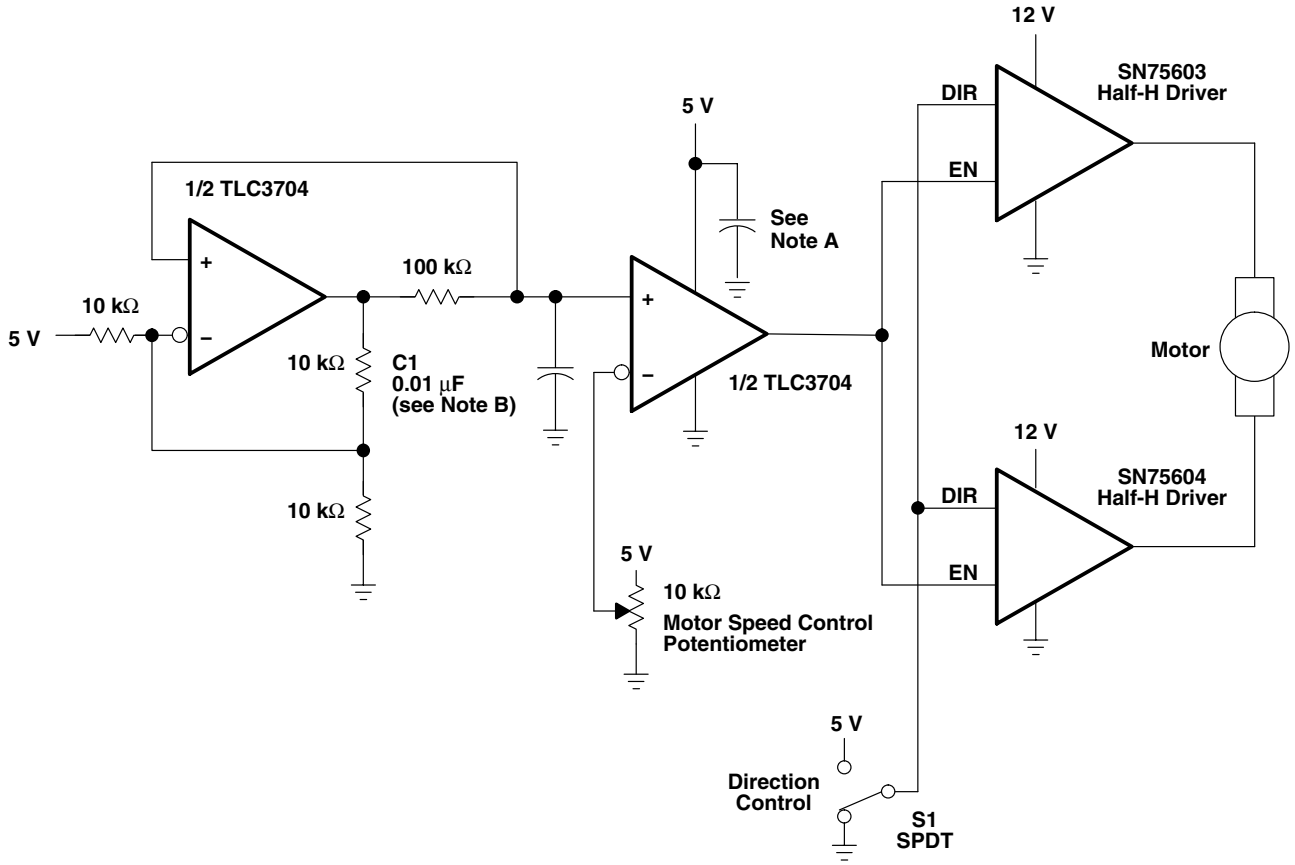

NOTES: A. The recommended minimum capacitance is 10 µF to eliminate common ground switching noise.
B. Adjust C1 for change in oscillator frequency

Figure 25. Pulse-Width-Modulated Motor Speed Controller

APPLICATION INFORMATION

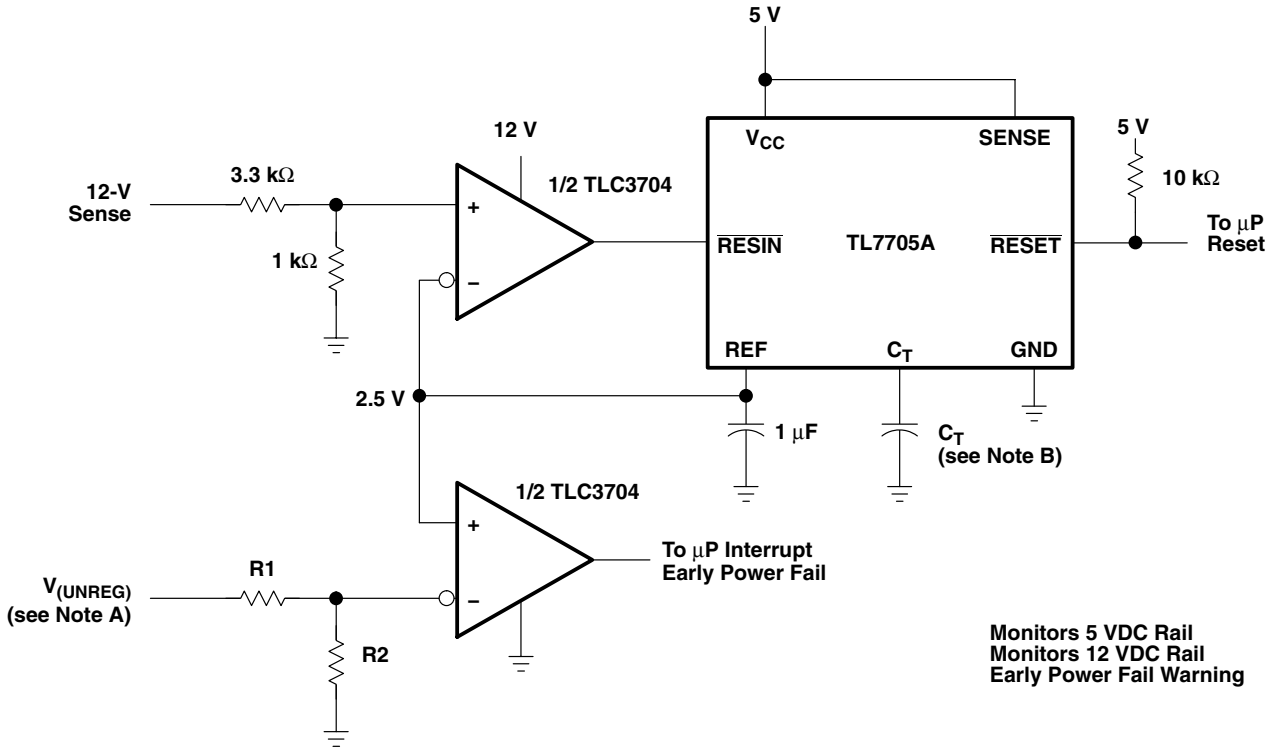

NOTES: A. $V_{(UNREG)} = 2.5\frac{(R1 + R2)}{R2}$

B. The value of C_T determines the time delay of reset.

Figure 26. Enhanced Supply Supervisor

APPLICATION INFORMATION

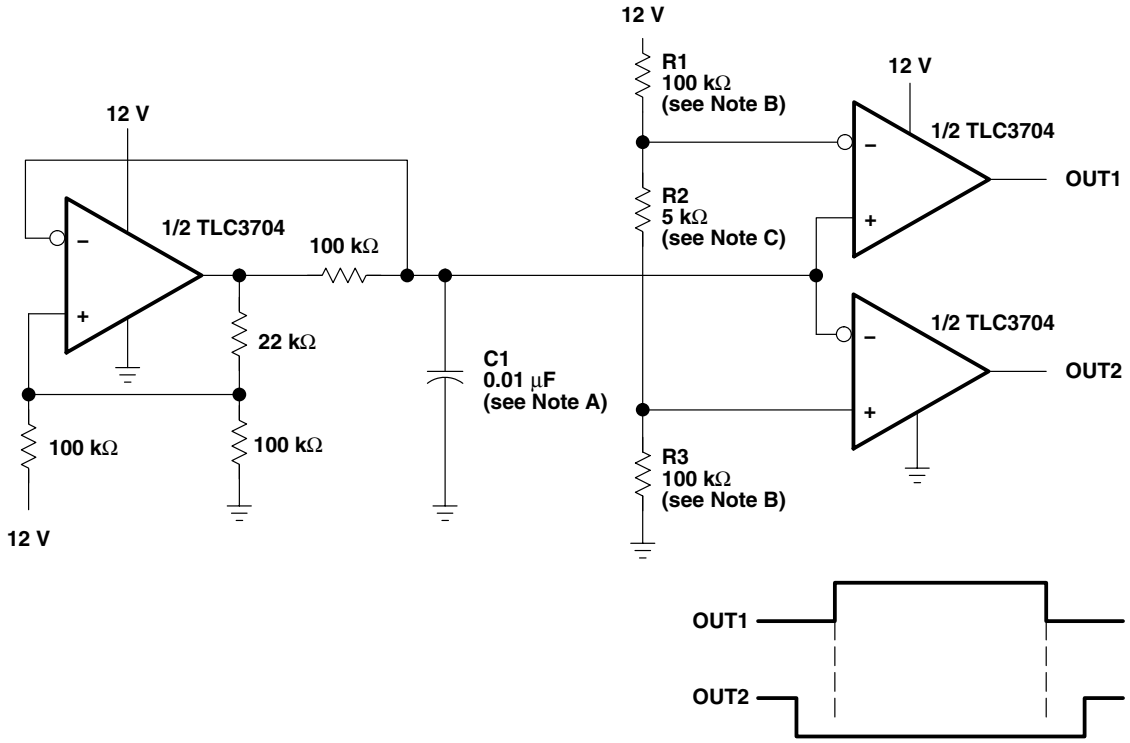

NOTES: A. Adjust C1 for a change in oscillator frequency where:
$1/f = 1.85(100\ k\Omega)C1$
B. Adjust R1 and R3 to change duty cycle
C. Adjust R2 to change deadtime

Figure 27. Two-Phase Nonoverlapping Clock Generator

APPLICATION INFORMATION

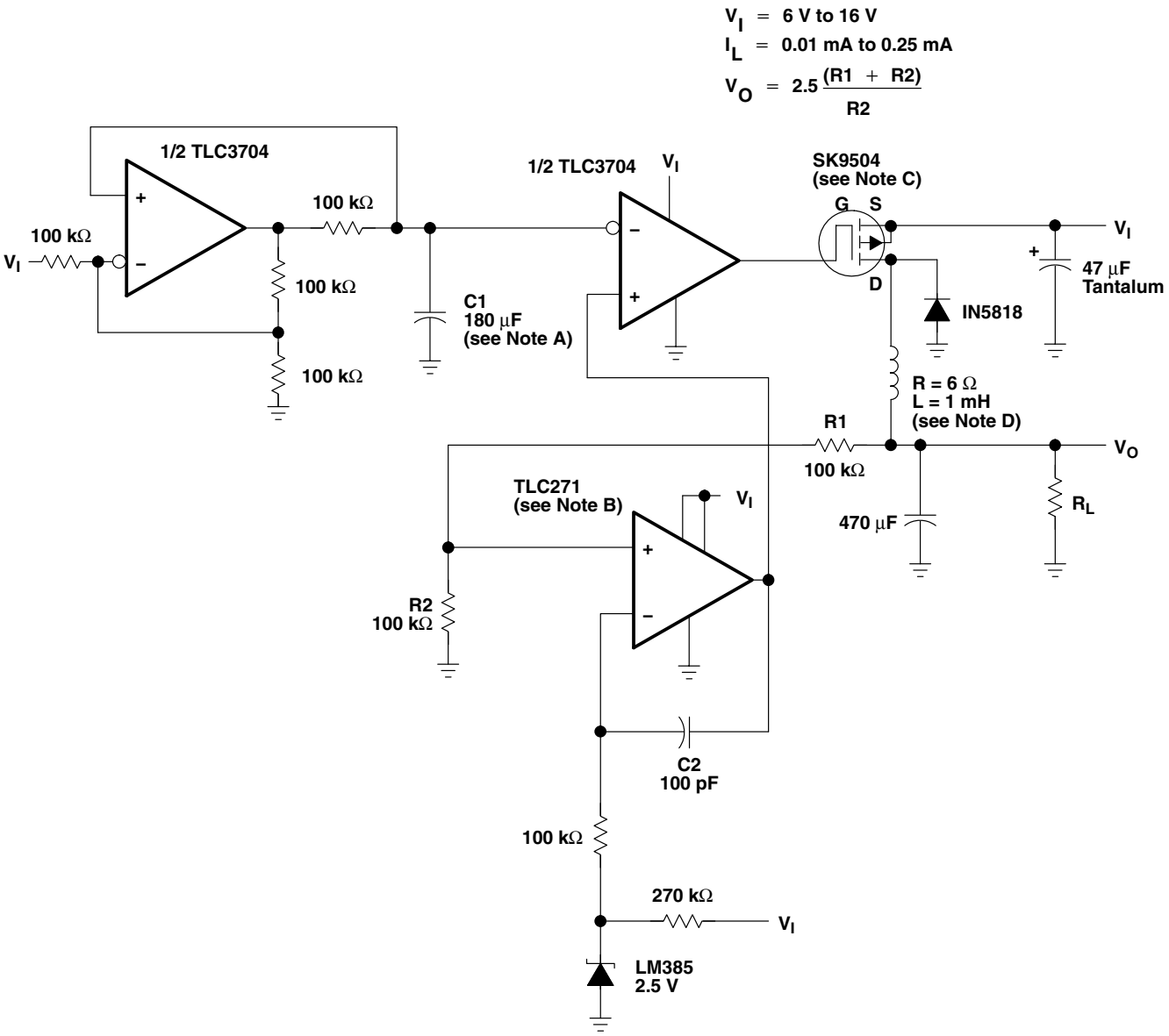

NOTES: A. Adjust C1 for a change in oscillator frequency
B. TLC271 – Tie pin 8 to pin 7 for low bias operation
C. SK9504 – VDS = 40 V
IDS = 1 Awill
D. To achieve microampere current drive, the inductance of the circuit must be increased.

Figure 28. Micropower Switching Regulator

PACKAGING INFORMATION

Orderable Device	Status (1)	Package Type	Package Drawing	Pins	Package Qty	Eco Plan (2)	Lead finish/ Ball material (6)	MSL Peak Temp (3)	Op Temp (°C)	Device Marking (4/5)	Samples
5962-9096901M2A	ACTIVE	LCCC	FK	20	1	Non-RoHS & Green	SNPB	N / A for Pkg Type	-55 to 125	5962-9096901M2A TLC3704 MFKB	Samples
5962-9096901MCA	ACTIVE	CDIP	J	14	1	Non-RoHS & Green	SNPB	N / A for Pkg Type	-55 to 125	5962-9096901MCA TLC3704MJB	Samples
TLC3704CD	ACTIVE	SOIC	D	14	50	RoHS & Green	NIPDAU	Level-1-260C-UNLIM	0 to 70	TLC3704C	Samples
TLC3704CDR	ACTIVE	SOIC	D	14	2500	RoHS & Green	NIPDAU	Level-1-260C-UNLIM	0 to 70	TLC3704C	Samples
TLC3704CN	ACTIVE	PDIP	N	14	25	RoHS & Green	NIPDAU	N / A for Pkg Type	0 to 70	TLC3704CN	Samples
TLC3704CNSR	ACTIVE	SO	NS	14	2000	RoHS & Green	NIPDAU	Level-1-260C-UNLIM	0 to 70	TLC3704	Samples
TLC3704CPW	ACTIVE	TSSOP	PW	14	90	RoHS & Green	NIPDAU	Level-1-260C-UNLIM	0 to 70	P3704	Samples
TLC3704CPWR	ACTIVE	TSSOP	PW	14	2000	RoHS & Green	NIPDAU	Level-1-260C-UNLIM	0 to 70	P3704	Samples
TLC3704CPWRG4	ACTIVE	TSSOP	PW	14	2000	RoHS & Green	NIPDAU	Level-1-260C-UNLIM	0 to 70	P3704	Samples
TLC3704ID	ACTIVE	SOIC	D	14	50	RoHS & Green	NIPDAU	Level-1-260C-UNLIM	-40 to 85	TLC3704I	Samples
TLC3704IDG4	ACTIVE	SOIC	D	14	50	RoHS & Green	NIPDAU	Level-1-260C-UNLIM	-40 to 85	TLC3704I	Samples
TLC3704IDR	ACTIVE	SOIC	D	14	2500	RoHS & Green	NIPDAU	Level-1-260C-UNLIM	-40 to 85	TLC3704I	Samples
TLC3704IN	ACTIVE	PDIP	N	14	25	RoHS & Green	NIPDAU	N / A for Pkg Type	-40 to 85	TLC3704IN	Samples
TLC3704IPW	ACTIVE	TSSOP	PW	14	90	RoHS & Green	NIPDAU	Level-1-260C-UNLIM	-40 to 85	P3704I	Samples
TLC3704IPWR	ACTIVE	TSSOP	PW	14	2000	RoHS & Green	NIPDAU	Level-1-260C-UNLIM	-40 to 85	P3704I	Samples
TLC3704MD	ACTIVE	SOIC	D	14	50	RoHS & Green	NIPDAU	Level-1-260C-UNLIM	-55 to 125	TLC3704MD	Samples
TLC3704MDR	ACTIVE	SOIC	D	14	2500	RoHS & Green	NIPDAU	Level-1-260C-UNLIM	-55 to 125	TLC3704MD	Samples
TLC3704MFKB	ACTIVE	LCCC	FK	20	1	Non-RoHS & Green	SNPB	N / A for Pkg Type	-55 to 125	5962-9096901M2A	Samples

Orderable Device	Status (1)	Package Type	Package Drawing	Pins	Package Qty	Eco Plan (2)	Lead finish/ Ball material (6)	MSL Peak Temp (3)	Op Temp (°C)	Device Marking (4/5)	Samples
										TLC3704 MFKB	
TLC3704MJB	ACTIVE	CDIP	J	14	1	Non-RoHS & Green	SNPB	N / A for Pkg Type	-55 to 125	5962-9096901MCA TLC3704MJB	Samples

(1) The marketing status values are defined as follows:
ACTIVE: Product device recommended for new designs.
LIFEBUY: TI has announced that the device will be discontinued, and a lifetime-buy period is in effect.
NRND: Not recommended for new designs. Device is in production to support existing customers, but TI does not recommend using this part in a new design.
PREVIEW: Device has been announced but is not in production. Samples may or may not be available.
OBSOLETE: TI has discontinued the production of the device.

(2) **RoHS:** TI defines "RoHS" to mean semiconductor products that are compliant with the current EU RoHS requirements for all 10 RoHS substances, including the requirement that RoHS substance do not exceed 0.1% by weight in homogeneous materials. Where designed to be soldered at high temperatures, "RoHS" products are suitable for use in specified lead-free processes. TI may reference these types of products as "Pb-Free".
RoHS Exempt: TI defines "RoHS Exempt" to mean products that contain lead but are compliant with EU RoHS pursuant to a specific EU RoHS exemption.
Green: TI defines "Green" to mean the content of Chlorine (Cl) and Bromine (Br) based flame retardants meet JS709B low halogen requirements of <=1000ppm threshold. Antimony trioxide based flame retardants must also meet the <=1000ppm threshold requirement.

(3) MSL, Peak Temp. - The Moisture Sensitivity Level rating according to the JEDEC industry standard classifications, and peak solder temperature.

(4) There may be additional marking, which relates to the logo, the lot trace code information, or the environmental category on the device.

(5) Multiple Device Markings will be inside parentheses. Only one Device Marking contained in parentheses and separated by a "~" will appear on a device. If a line is indented then it is a continuation of the previous line and the two combined represent the entire Device Marking for that device.

(6) Lead finish/Ball material - Orderable Devices may have multiple material finish options. Finish options are separated by a vertical ruled line. Lead finish/Ball material values may wrap to two lines if the finish value exceeds the maximum column width.

Important Information and Disclaimer: The information provided on this page represents TI's knowledge and belief as of the date that it is provided. TI bases its knowledge and belief on information provided by third parties, and makes no representation or warranty as to the accuracy of such information. Efforts are underway to better integrate information from third parties. TI has taken and continues to take reasonable steps to provide representative and accurate information but may not have conducted destructive testing or chemical analysis on incoming materials and chemicals. TI and TI suppliers consider certain information to be proprietary, and thus CAS numbers and other limited information may not be available for release.

In no event shall TI's liability arising out of such information exceed the total purchase price of the TI part(s) at issue in this document sold by TI to Customer on an annual basis.

OTHER QUALIFIED VERSIONS OF TLC3704, TLC3704M :

- Catalog : TLC3704
- Automotive : TLC3704-Q1, TLC3704-Q1
- Military : TLC3704M

NOTE: Qualified Version Definitions:

- Catalog - TI's standard catalog product
- Automotive - Q100 devices qualified for high-reliability automotive applications targeting zero defects
- Military - QML certified for Military and Defense Applications

TAPE AND REEL INFORMATION

REEL DIMENSIONS

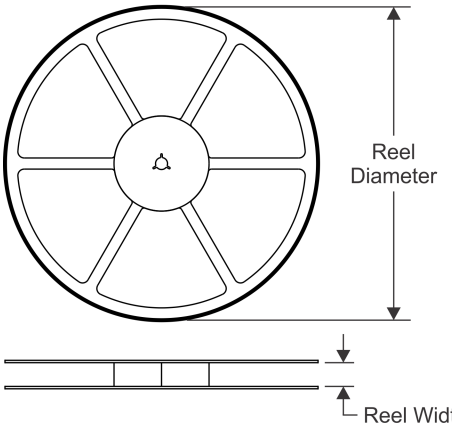

TAPE DIMENSIONS

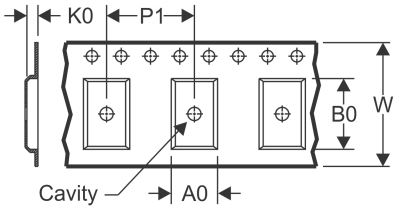

A0	Dimension designed to accommodate the component width
B0	Dimension designed to accommodate the component length
K0	Dimension designed to accommodate the component thickness
W	Overall width of the carrier tape
P1	Pitch between successive cavity centers

QUADRANT ASSIGNMENTS FOR PIN 1 ORIENTATION IN TAPE

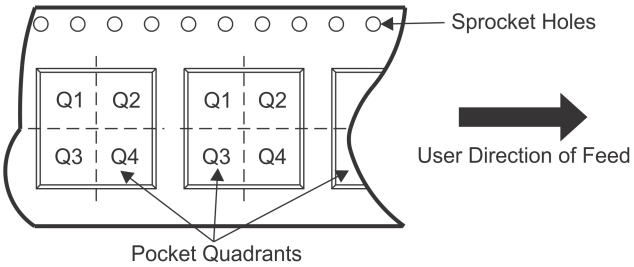

*All dimensions are nominal

Device	Package Type	Package Drawing	Pins	SPQ	Reel Diameter (mm)	Reel Width W1 (mm)	A0 (mm)	B0 (mm)	K0 (mm)	P1 (mm)	W (mm)	Pin1 Quadrant
TLC3704CDR	SOIC	D	14	2500	330.0	16.4	6.5	9.0	2.1	8.0	16.0	Q1
TLC3704CNSR	SO	NS	14	2000	330.0	16.4	8.2	10.5	2.5	12.0	16.0	Q1
TLC3704CPWR	TSSOP	PW	14	2000	330.0	12.4	6.9	5.6	1.6	8.0	12.0	Q1
TLC3704IDR	SOIC	D	14	2500	330.0	16.4	6.5	9.0	2.1	8.0	16.0	Q1
TLC3704IPWR	TSSOP	PW	14	2000	330.0	12.4	6.9	5.6	1.6	8.0	12.0	Q1
TLC3704MDR	SOIC	D	14	2500	330.0	16.4	6.5	9.0	2.1	8.0	16.0	Q1

TAPE AND REEL BOX DIMENSIONS

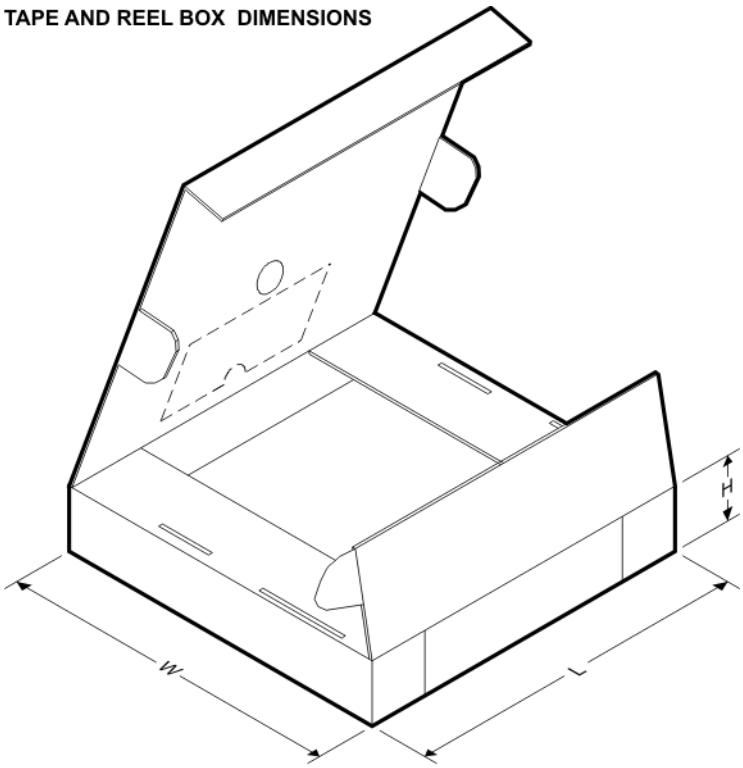

*All dimensions are nominal

Device	Package Type	Package Drawing	Pins	SPQ	Length (mm)	Width (mm)	Height (mm)
TLC3704CDR	SOIC	D	14	2500	350.0	350.0	43.0
TLC3704CNSR	SO	NS	14	2000	853.0	449.0	35.0
TLC3704CPWR	TSSOP	PW	14	2000	853.0	449.0	35.0
TLC3704IDR	SOIC	D	14	2500	350.0	350.0	43.0
TLC3704IPWR	TSSOP	PW	14	2000	853.0	449.0	35.0
TLC3704MDR	SOIC	D	14	2500	350.0	350.0	43.0

TUBE

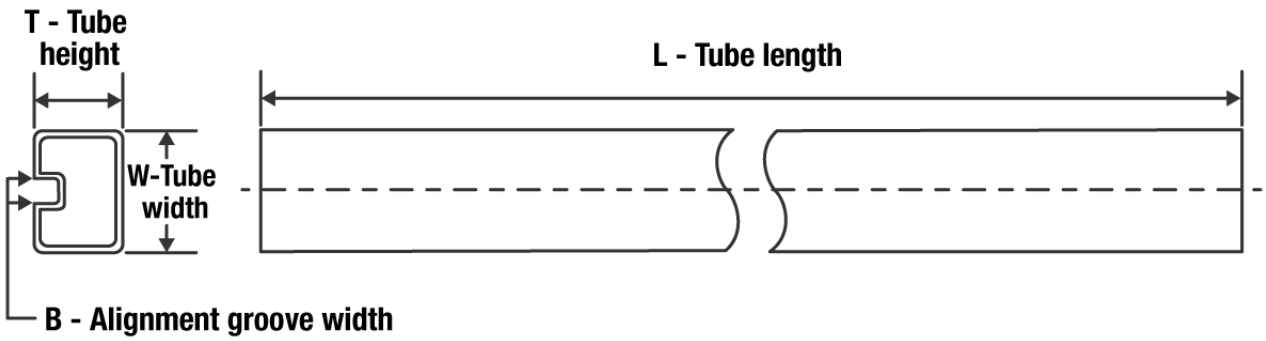

*All dimensions are nominal

Device	Package Name	Package Type	Pins	SPQ	L (mm)	W (mm)	T (µm)	B (mm)
5962-9096901M2A	FK	LCCC	20	1	506.98	12.06	2030	NA
TLC3704CD	D	SOIC	14	50	505.46	6.76	3810	4
TLC3704CN	N	PDIP	14	25	506	13.97	11230	4.32
TLC3704CPW	PW	TSSOP	14	90	530	10.2	3600	3.5
TLC3704ID	D	SOIC	14	50	505.46	6.76	3810	4
TLC3704IDG4	D	SOIC	14	50	505.46	6.76	3810	4
TLC3704IN	N	PDIP	14	25	506	13.97	11230	4.32
TLC3704IPW	PW	TSSOP	14	90	530	10.2	3600	3.5
TLC3704MD	D	SOIC	14	50	505.46	6.76	3810	4
TLC3704MFKB	FK	LCCC	20	1	506.98	12.06	2030	NA

FK (S–CQCC–N**) LEADLESS CERAMIC CHIP CARRIER

28 TERMINAL SHOWN

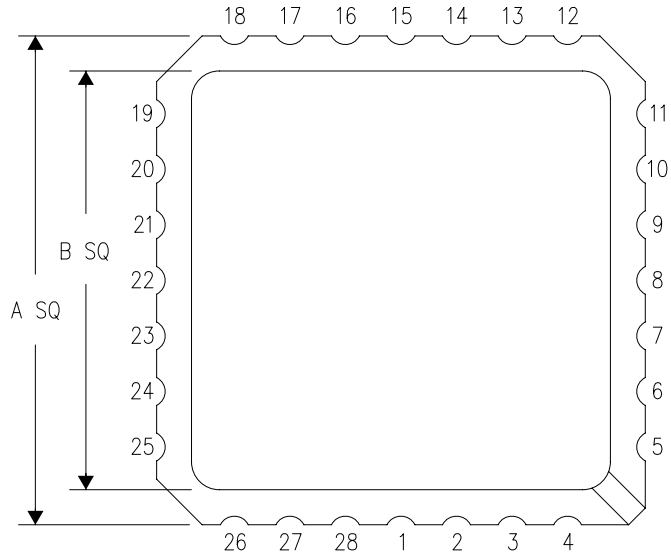

NO. OF TERMINALS **	A		B	
	MIN	MAX	MIN	MAX
20	0.342 (8,69)	0.358 (9,09)	0.307 (7,80)	0.358 (9,09)
28	0.442 (11,23)	0.458 (11,63)	0.406 (10,31)	0.458 (11,63)
44	0.640 (16,26)	0.660 (16,76)	0.495 (12,58)	0.560 (14,22)
52	0.740 (18,78)	0.761 (19,32)	0.495 (12,58)	0.560 (14,22)
68	0.938 (23,83)	0.962 (24,43)	0.850 (21,6)	0.858 (21,8)
84	1.141 (28,99)	1.165 (29,59)	1.047 (26,6)	1.063 (27,0)

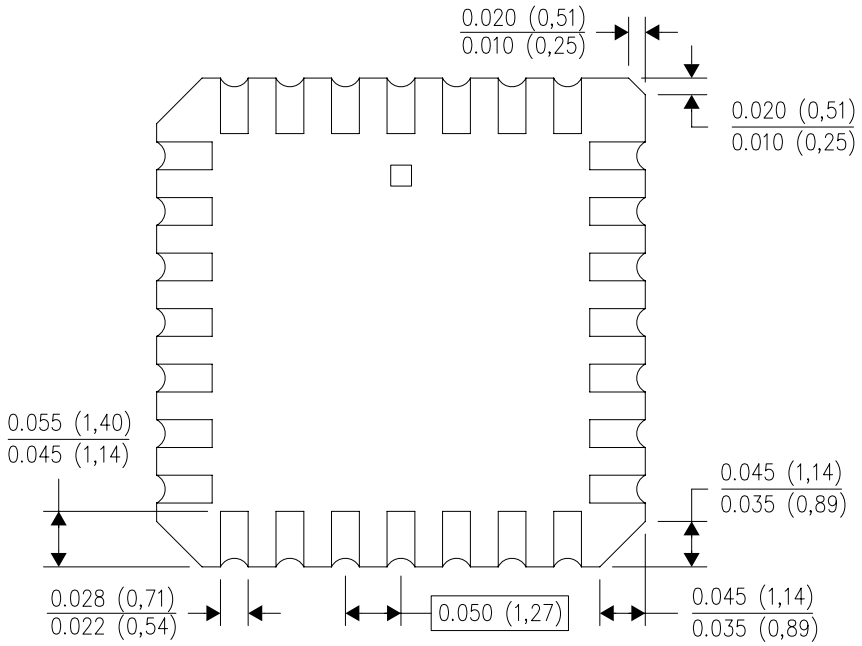

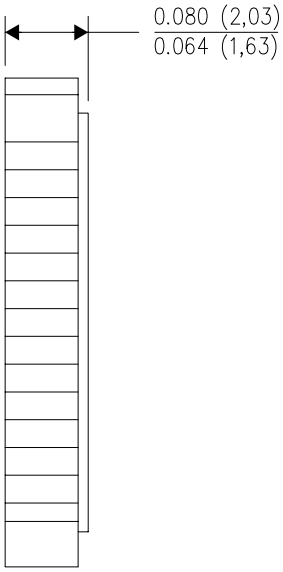

4040140/D 01/11

NOTES:
A. All linear dimensions are in inches (millimeters).
B. This drawing is subject to change without notice.
C. This package can be hermetically sealed with a metal lid.
D. Falls within JEDEC MS–004

MECHANICAL DATA

NS (R-PDSO-G)** **PLASTIC SMALL-OUTLINE PACKAGE**

14-PINS SHOWN

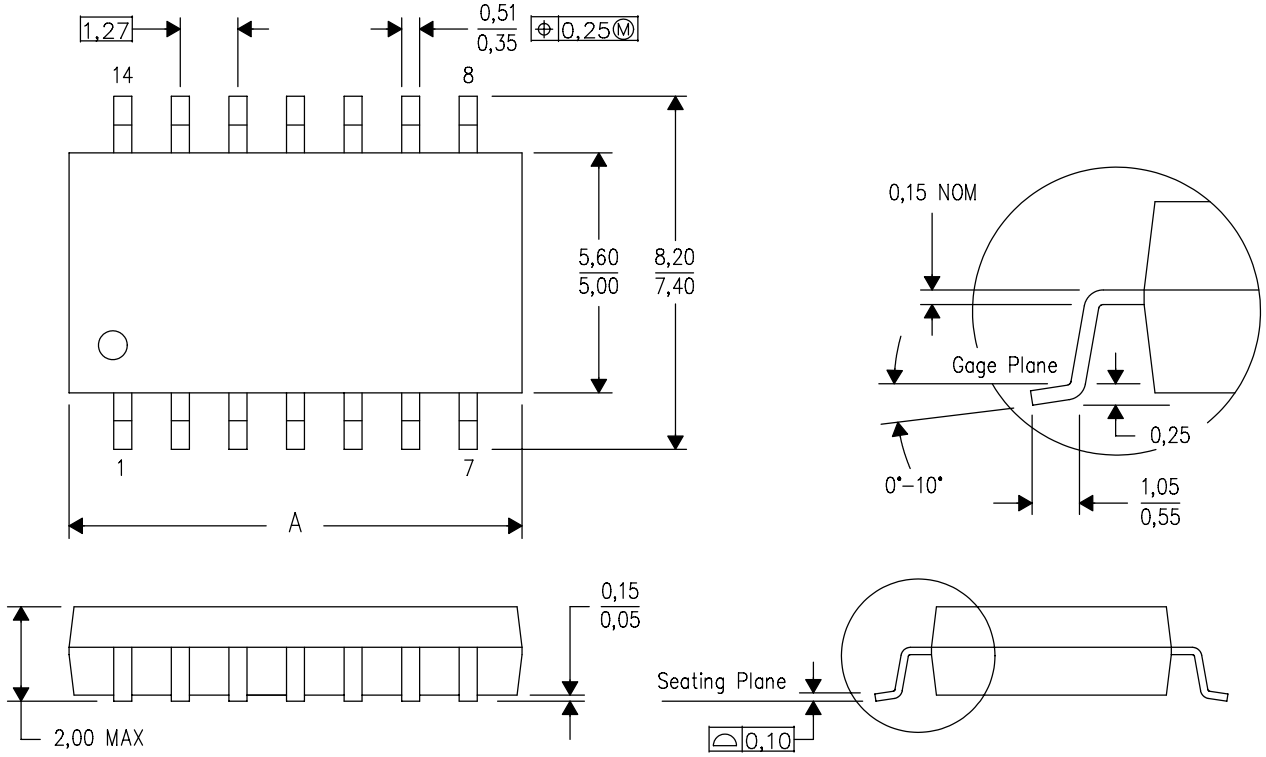

DIM \ PINS **	14	16	20	24
A MAX	10,50	10,50	12,90	15,30
A MIN	9,90	9,90	12,30	14,70

4040062/C 03/03

NOTES:
A. All linear dimensions are in millimeters.
B. This drawing is subject to change without notice.
C. Body dimensions do not include mold flash or protrusion, not to exceed 0,15.

J 14 CDIP - 5.08 mm max height

CERAMIC DUAL IN LINE PACKAGE

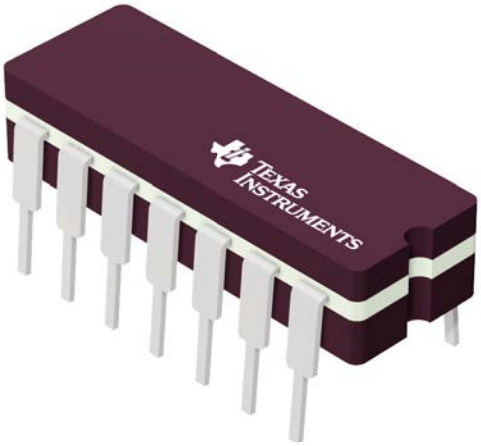

Images above are just a representation of the package family, actual package may vary.
Refer to the product data sheet for package details.

4040083-5/G

PACKAGE OUTLINE

J0014A

CDIP - 5.08 mm max height

CERAMIC DUAL IN LINE PACKAGE

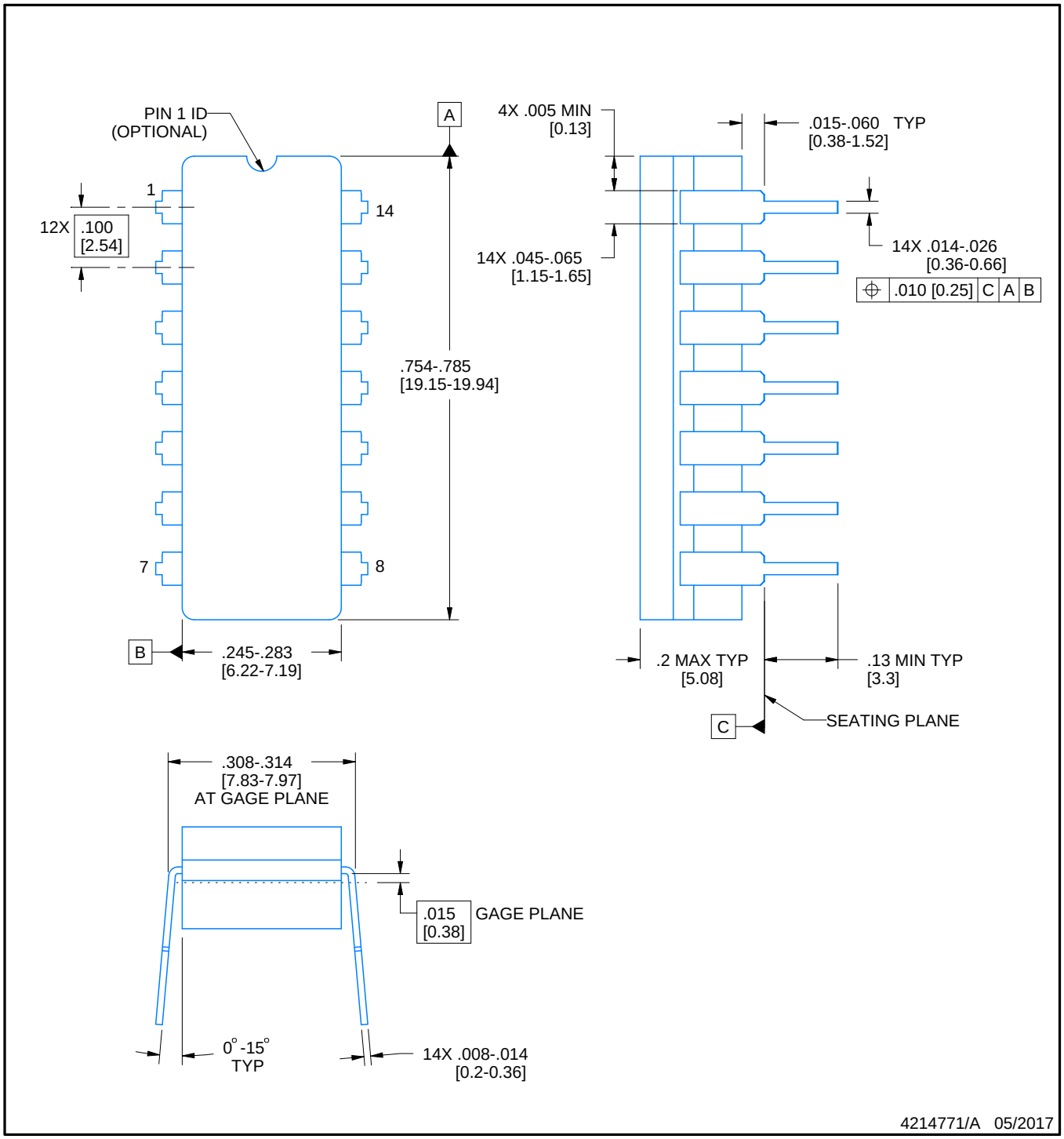

NOTES:

1. All controlling linear dimensions are in inches. Dimensions in brackets are in millimeters. Any dimension in brackets or parenthesis are for reference only. Dimensioning and tolerancing per ASME Y14.5M.
2. This drawing is subject to change without notice.
3. This package is hermitically sealed with a ceramic lid using glass frit.
4. Index point is provided on cap for terminal identification only and on press ceramic glass frit seal only.
5. Falls within MIL-STD-1835 and GDIP1-T14.

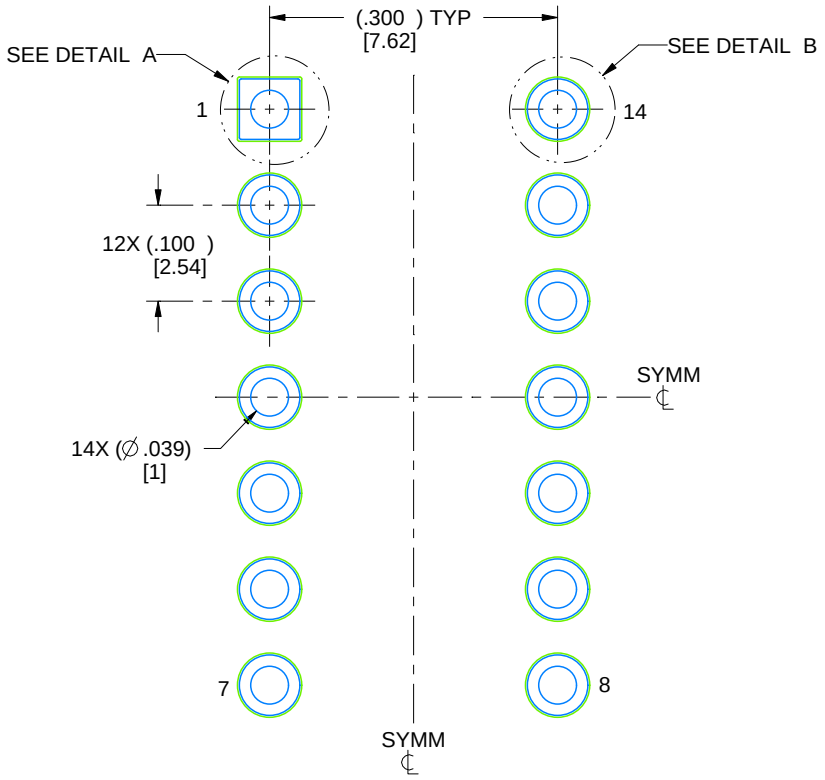

LAND PATTERN EXAMPLE
NON-SOLDER MASK DEFINED
SCALE: 5X

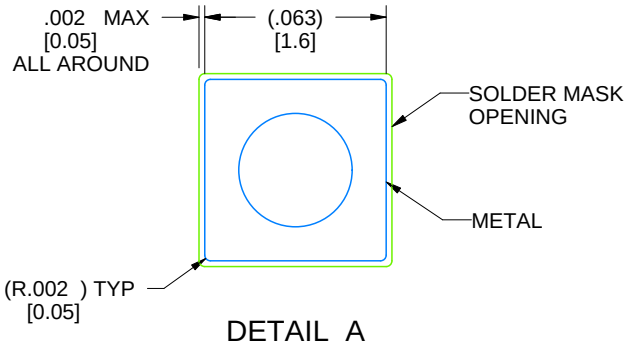

DETAIL A
SCALE: 15X

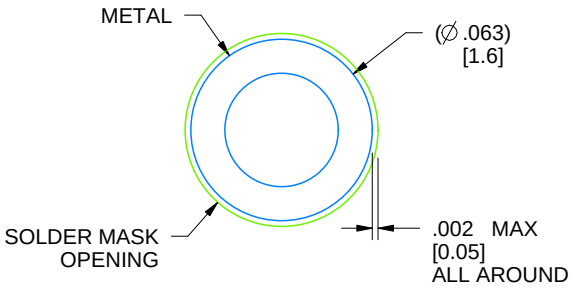

DETAIL B
13X, SCALE: 15X

4214771/A 05/2017

D (R–PDSO–G14) PLASTIC SMALL OUTLINE

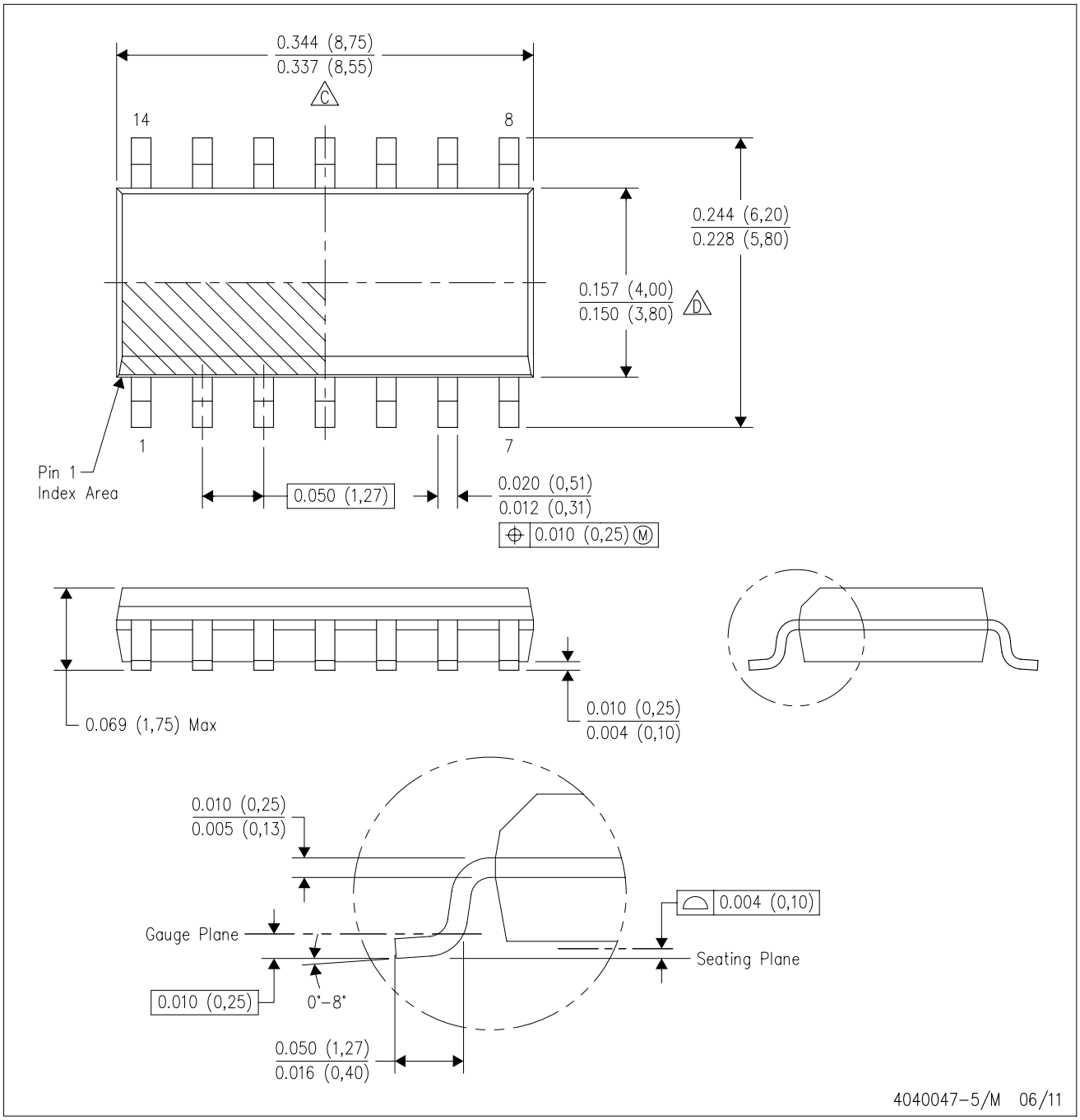

NOTES:
A. All linear dimensions are in inches (millimeters).
B. This drawing is subject to change without notice.
C. Body length does not include mold flash, protrusions, or gate burrs. Mold flash, protrusions, or gate burrs shall not exceed 0.006 (0,15) each side.
D. Body width does not include interlead flash. Interlead flash shall not exceed 0.017 (0,43) each side.
E. Reference JEDEC MS–012 variation AB.

D (R–PDSO–G14) PLASTIC SMALL OUTLINE

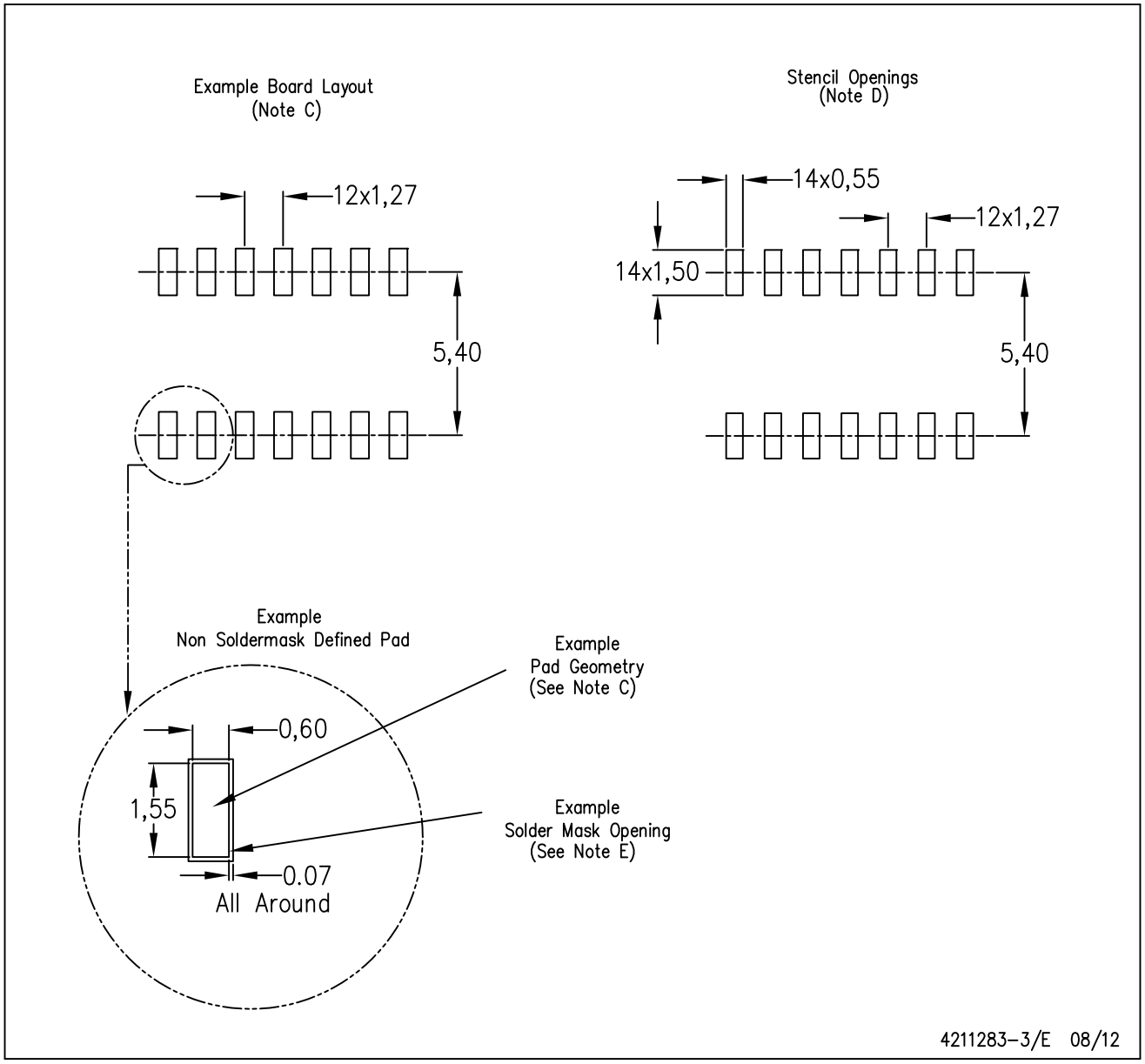

NOTES:
A. All linear dimensions are in millimeters.
B. This drawing is subject to change without notice.
C. Publication IPC–7351 is recommended for alternate designs.
D. Laser cutting apertures with trapezoidal walls and also rounding corners will offer better paste release. Customers should contact their board assembly site for stencil design recommendations. Refer to IPC–7525 for other stencil recommendations.
E. Customers should contact their board fabrication site for solder mask tolerances between and around signal pads.

PW (R–PDSO–G14) PLASTIC SMALL OUTLINE

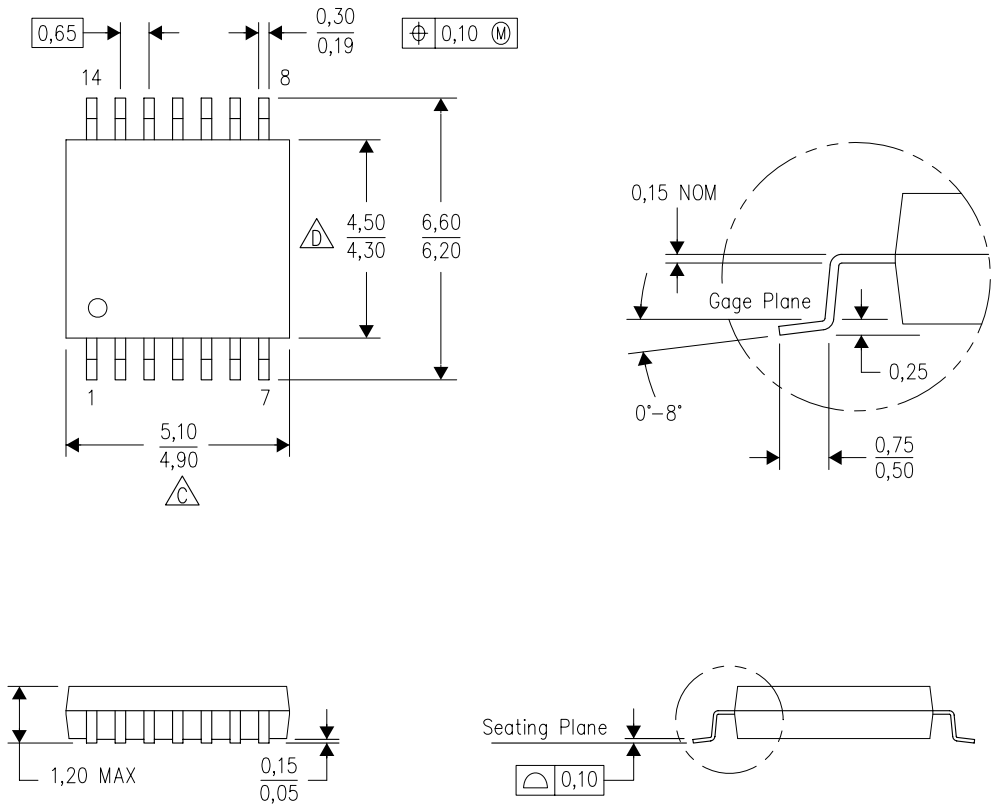

NOTES:
A. All linear dimensions are in millimeters. Dimensioning and tolerancing per ASME Y14.5M–1994.
B. This drawing is subject to change without notice.
C. Body length does not include mold flash, protrusions, or gate burrs. Mold flash, protrusions, or gate burrs shall not exceed 0,15 each side.
D. Body width does not include interlead flash. Interlead flash shall not exceed 0,25 each side.
E. Falls within JEDEC MO–153

N (R–PDIP–T**) PLASTIC DUAL–IN–LINE PACKAGE

16 PINS SHOWN

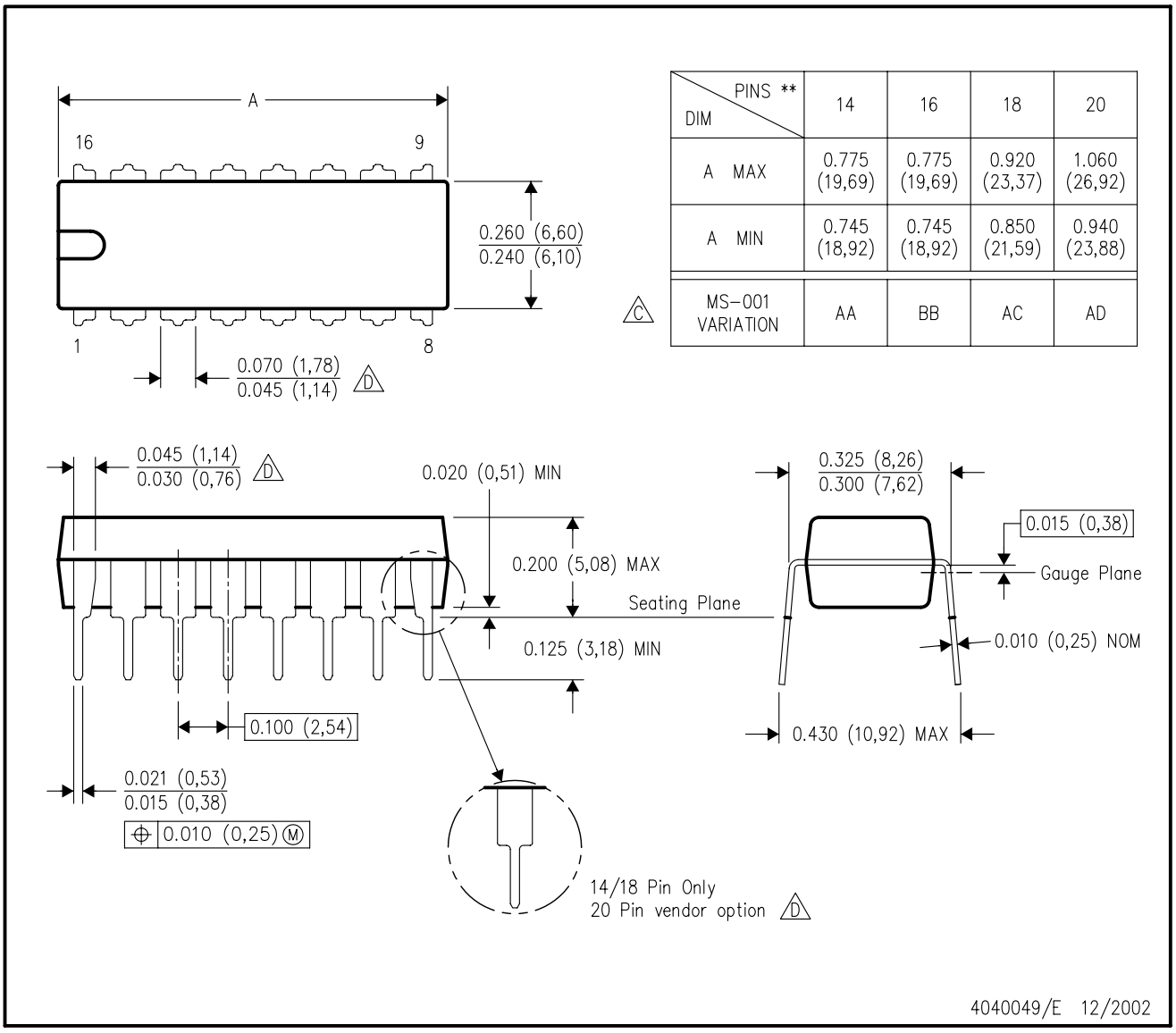

DIM \ PINS **	14	16	18	20
A MAX	0.775 (19,69)	0.775 (19,69)	0.920 (23,37)	1.060 (26,92)
A MIN	0.745 (18,92)	0.745 (18,92)	0.850 (21,59)	0.940 (23,88)
MS–001 VARIATION (C)	AA	BB	AC	AD

NOTES:
A. All linear dimensions are in inches (millimeters).
B. This drawing is subject to change without notice.
C. Falls within JEDEC MS–001, except 18 and 20 pin minimum body length (Dim A).
D. The 20 pin end lead shoulder width is a vendor option, either half or full width.

IMPORTANT NOTICE AND DISCLAIMER

TI PROVIDES TECHNICAL AND RELIABILITY DATA (INCLUDING DATA SHEETS), DESIGN RESOURCES (INCLUDING REFERENCE DESIGNS), APPLICATION OR OTHER DESIGN ADVICE, WEB TOOLS, SAFETY INFORMATION, AND OTHER RESOURCES “AS IS” AND WITH ALL FAULTS, AND DISCLAIMS ALL WARRANTIES, EXPRESS AND IMPLIED, INCLUDING WITHOUT LIMITATION ANY IMPLIED WARRANTIES OF MERCHANTABILITY, FITNESS FOR A PARTICULAR PURPOSE OR NON-INFRINGEMENT OF THIRD PARTY INTELLECTUAL PROPERTY RIGHTS.

These resources are intended for skilled developers designing with TI products. You are solely responsible for (1) selecting the appropriate TI products for your application, (2) designing, validating and testing your application, and (3) ensuring your application meets applicable standards, and any other safety, security, regulatory or other requirements.

These resources are subject to change without notice. TI grants you permission to use these resources only for development of an application that uses the TI products described in the resource. Other reproduction and display of these resources is prohibited. No license is granted to any other TI intellectual property right or to any third party intellectual property right. TI disclaims responsibility for, and you will fully indemnify TI and its representatives against, any claims, damages, costs, losses, and liabilities arising out of your use of these resources.

TI’s products are provided subject to TI’s Terms of Sale or other applicable terms available either on ti.com or provided in conjunction with such TI products. TI’s provision of these resources does not expand or otherwise alter TI’s applicable warranties or warranty disclaimers for TI products.

TI objects to and rejects any additional or different terms you may have proposed.

Mailing Address: Texas Instruments, Post Office Box 655303, Dallas, Texas 75265
Copyright © 2022, Texas Instruments Incorporated