FEATURES

- **Members of the Texas Instruments Widebus™ Family**
- **A-Port Outputs Have Equivalent 22-Ω Series Resistors, So No External Resistors Are Required**
- **Support Mixed-Mode Signal Operation (5-V Input and Output Voltages With 3.3-V V_{CC})**
- **Support Unregulated Battery Operation Down to 2.7 V**
- **Typical V_{OLP} (Output Ground Bounce) <0.8 V at V_{CC} = 3.3 V, T_A = 25°C**
- **I_{off} and Power-Up 3-State Support Hot Insertion**
- **Bus Hold on Data Inputs Eliminates the Need for External Pullup/Pulldown Resistors**
- **Distributed V_{CC} and GND Pins Minimize High-Speed Switching Noise**
- **Flow-Through Architecture Optimizes PCB Layout**
- **Latch-Up Performance Exceeds 500 mA Per JESD 17**
- **ESD Protection Exceeds JESD 22**
  - **2000-V Human-Body Model (A114-A)**
  - **200-V Machine Model (A115-A)**
  - **1000-V Charged-Device Model (C101)**

SN54LVTH162245 . . . WD PACKAGE
SN74LVTH162245 . . . DGG OR DL PACKAGE
(TOP VIEW)

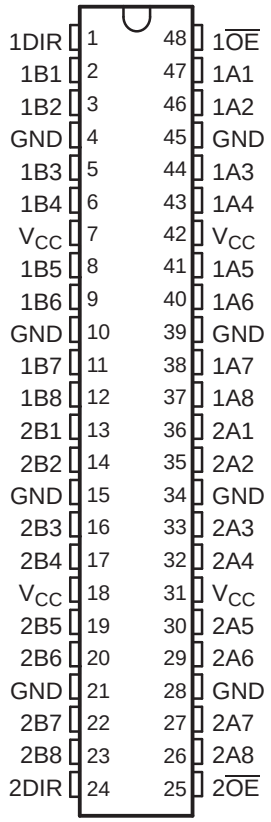

DESCRIPTION/ORDERING INFORMATION

The 'LVTH162245 devices are 16-bit (dual-octal) noninverting 3-state transceivers designed for low-voltage (3.3-V) V_{CC} operation, but with the capability to provide a TTL interface to a 5-V system environment.

These devices can be used as two 8-bit transceivers or one 16-bit transceiver. The devices allow data transmission from the A bus to the B bus or from the B bus to the A bus, depending on the logic level at the direction-control (DIR) input. The output-enable ($\overline{OE}$) input can be used to disable the device so that the buses are effectively isolated.

The logic levels of the direction-control (DIR) input and the output-enable ($\overline{OE}$) input activate either the B-port outputs or the A-port outputs or place both output ports into the high-impedance mode. The device transmits data from the A bus to the B bus when the B-port outputs are activated, and from the B bus to the A bus when the A-port outputs are activated. The input circuitry on both A and B ports is always active and must have a logic HIGH or LOW level applied to prevent excess I_{CC} and I_{CCZ}.

Active bus-hold circuitry holds unused or undriven inputs at a valid logic state. Use of pullup or pulldown resistors with the bus-hold circuitry is not recommended.

The A-port outputs, which are designed to source or sink up to 12 mA, include equivalent 22-Ω series resistors to reduce overshoot and undershoot.

Please be aware that an important notice concerning availability, standard warranty, and use in critical applications of Texas Instruments semiconductor products and disclaimers thereto appears at the end of this data sheet.

Widebus is a trademark of Texas Instruments.

PRODUCTION DATA information is current as of publication date. Products conform to specifications per the terms of the Texas Instruments standard warranty. Production processing does not necessarily include testing of all parameters.

Copyright © 1993–2006, Texas Instruments Incorporated
On products compliant to MIL-PRF-38535, all parameters are tested unless otherwise noted. On all other products, production processing does not necessarily include testing of all parameters.

DESCRIPTION/ORDERING INFORMATION (CONTINUED)

When V_{CC} is between 0 and 1.5 V, the devices are in the high-impedance state during power up or power down. However, to ensure the high-impedance state above 1.5 V, $\overline{OE}$ should be tied to V_{CC} through a pullup resistor; the minimum value of the resistor is determined by the current-sinking capability of the driver.

These devices are fully specified for hot-insertion applications using I_{off} and power-up 3-state. The I_{off} circuitry disables the outputs, preventing damaging current backflow through the devices when they are powered down. The power-up 3-state circuitry places the outputs in the high-impedance state during power up and power down, which prevents driver conflict.

ORDERING INFORMATION

T_A	PACKAGE(1)		ORDERABLE PART NUMBER	TOP-SIDE MARKING
–40°C to 85°C	FBGA – GRD	Reel of 1000	74LVTH162245GRDR	LL2245
	FBGA – ZRD (Pb-free)		74LVTH162245ZRDR	
	SSOP – DL	Tube of 25	SN74LVTH162245DL	LVTH162245
			SN74LVTH162245DLG4	
		Reel of 1000	SN74LVTH162245DLR	
			74LVTH162245DLRG4	
	TSSOP – DGG	Reel of 2000	SN74LVTH162245DGGR	LVTH162245
			74LVTH162245DGGRG4	
			74LVTH162245GRE4	
	VFBGA – GQL	Reel of 1000	SN74LVTH162245KR	LL2245
	VFBGA – ZQL (Pb-free)		74LVTH162245ZQLR	
–55°C to 125°C	CFP – WD	Tube	SNJ54LVTH162245WD	SNJ54LVTH162245WD

(1) Package drawings, standard packing quantities, thermal data, symbolization, and PCB design guidelines are available at www.ti.com/sc/package.

GQL OR ZQL PACKAGE
(TOP VIEW)

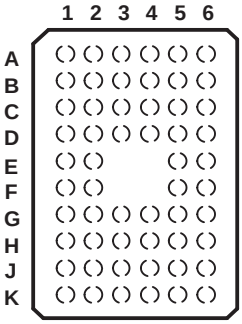

TERMINAL ASSIGNMENTS(1)
(56-Ball GQL/ZQL Package)

	1	2	3	4	5	6
A	1DIR	NC	NC	NC	NC	1$\overline{OE}$
B	1B2	1B1	GND	GND	1A1	1A2
C	1B4	1B3	V_{CC}	V_{CC}	1A3	1A4
D	1B6	1B5	GND	GND	1A5	1A6
E	1B8	1B7			1A7	1A8
F	2B1	2B2			2A2	2A1
G	2B3	2B4	GND	GND	2A4	2A3
H	2B5	2B6	V_{CC}	V_{CC}	2A6	2A5
J	2B7	2B8	GND	GND	2A8	2A7
K	2DIR	NC	NC	NC	NC	2$\overline{OE}$

(1) NC – No internal connection

GRD OR ZRD PACKAGE
(TOP VIEW)

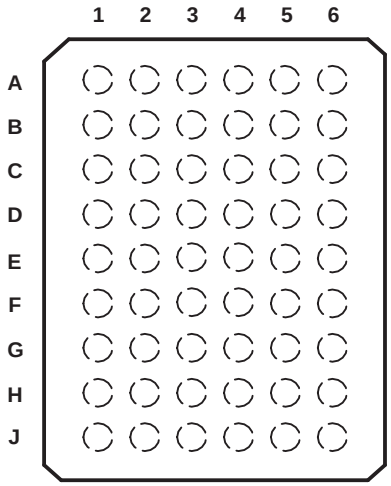

TERMINAL ASSIGNMENTS[(1)]
(54-Ball GRD/ZRD Package)

	1	2	3	4	5	6
A	1B1	NC	1DIR	1$\overline{OE}$	NC	1A1
B	1B3	1B2	NC	NC	1A2	1A3
C	1B5	1B4	V_{CC}	V_{CC}	1A4	1A5
D	1B7	1B6	GND	GND	1A6	1A7
E	2B1	1B8	GND	GND	1A8	2A1
F	2B3	2B2	GND	GND	2A2	2A3
G	2B5	2B4	V_{CC}	V_{CC}	2A4	2A5
H	2B7	2B6	NC	NC	2A6	2A7
J	2B8	NC	2DIR	2$\overline{OE}$	NC	2A8

(1) NC – No internal connection

FUNCTION TABLE[(1)]
(EACH 8-BIT SECTION)

CONTROL INPUTS		OUTPUT CIRCUITS		OPERATION
$\overline{OE}$	DIR	A PORT	B PORT	
L	L	Enabled	Hi-Z	B data to A bus
L	H	Hi-Z	Enabled	A data to B bus
H	X	Hi-Z	Hi-Z	Isolation

(1) Input circuits of the data I/Os always are active.

LOGIC DIAGRAM (POSITIVE LOGIC)

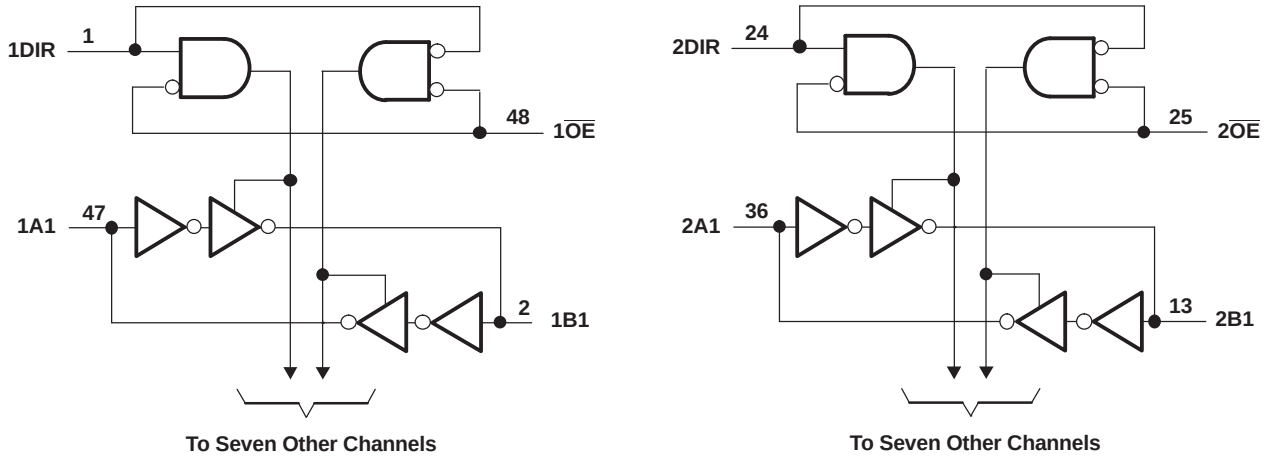

Absolute Maximum Ratings[1]

over operating free-air temperature range (unless otherwise noted)

			MIN	MAX	UNIT
V_{CC}	Supply voltage range		–0.5	4.6	V
V_I	Input voltage range[2]		–0.5	7	V
V_O	Voltage range applied to any output in the high-impedance or power-off state[2]		–0.5	7	V
V_O	Voltage range applied to any output in the high state[2]		–0.5	V_{CC} + 0.5	V
I_O	Current into any output in the low state	SN54LVTH162245 (B port)		96	mA
		SN74LVTH162245 (B port)		128	
		A port		30	
I_O	Current into any output in the high state[3]	SN54LVTH162245 (B port)		48	mA
		SN74LVTH162245 (B port)		64	
		A port		30	
I_{IK}	Input clamp current	$V_I < 0$		–50	mA
I_{OK}	Output clamp current	$V_O < 0$		–50	mA
θ_{JA}	Package thermal impedance[4]	DGG package		70	°C/W
		DL package		63	
		GQL/ZQL package		42	
		GRD/ZRD package		36	
T_{stg}	Storage temperature range		–65	150	°C

(1) Stresses beyond those listed under "absolute maximum ratings" may cause permanent damage to the device. These are stress ratings only, and functional operation of the device at these or any other conditions beyond those indicated under "recommended operating conditions" is not implied. Exposure to absolute-maximum-rated conditions for extended periods may affect device reliability.
(2) The input and output negative-voltage ratings may be exceeded if the input and output clamp-current ratings are observed.
(3) This current flows only when the output is in the high state and $V_O > V_{CC}$.
(4) The package thermal impedance is calculated in accordance with JESD 51-7.

Recommended Operating Conditions[1]

			SN54LVTH162245		SN74LVTH162245		UNIT
			MIN	MAX	MIN	MAX	
V_{CC}	Supply voltage		2.7	3.6	2.7	3.6	V
V_{IH}	High-level input voltage		2		2		V
V_{IL}	Low-level input voltage			0.8		0.8	V
V_I	Input voltage			5.5		5.5	V
I_{OH}	High-level output current	A port		–12		–12	mA
		B port		–24		–32	
I_{OL}	Low-level output current	A port		12		12	mA
		B port		48		64	
$\Delta t/\Delta v$	Input transition rise or fall rate	Outputs enabled		10		10	ns/V
$\Delta t/\Delta V_{CC}$	Power-up ramp rate		200		200		µs/V
T_A	Operating free-air temperature		–55	125	–40	85	°C

(1) All unused control inputs of the device must be held at V_{CC} or GND to ensure proper device operation. Refer to the TI application report, *Implications of Slow or Floating CMOS Inputs*, literature number SCBA004.

Electrical Characteristics

over recommended operating free-air temperature range (unless otherwise noted)

PARAMETER		TEST CONDITIONS		SN54LVTH162245			SN74LVTH162245			UNIT
				MIN	TYP(1)	MAX	MIN	TYP(1)	MAX	
V_{IK}		V_{CC} = 2.7 V,	I_I = –18 mA			–1.2			–1.2	V
V_{OH}	A port	V_{CC} = 2.7 V to 3.6 V,	I_{OH} = –100 µA	V_{CC} – 0.2			V_{CC} – 0.2			V
		V_{CC} = 3 V,	I_{OH} = –12 mA	2			2			
	B port	V_{CC} = 2.7 V to 3.6 V,	I_{OH} = –100 µA	V_{CC} – 0.2			V_{CC} – 0.2			
		V_{CC} = 2.7 V,	I_{OH} = –8 mA	2.4			2.4			
		V_{CC} = 3 V	I_{OH} = –24 mA	2						
			I_{OH} = –32 mA				2			
V_{OL}	A port	V_{CC} = 2.7 V to 3.6 V,	I_{OL} = 100 µA			0.2			0.2	V
		V_{CC} = 3 V,	I_{OL} = 12 mA			0.8			0.8	
	B port	V_{CC} = 2.7 V	I_{OL} = 100 µA			0.2			0.2	
			I_{OL} = 24 mA			0.5			0.5	
		V_{CC} = 3 V	I_{OL} = 16 mA			0.4			0.4	
			I_{OL} = 32 mA			0.5			0.5	
			I_{OL} = 48 mA			0.55				
			I_{OL} = 64 mA						0.55	
I_I	Control inputs	V_{CC} = 3.6 V,	V_I = V_{CC} or GND			±1			±1	µA
		V_{CC} = 0 or 3.6 V,	V_I = 5.5 V			10			10	
	A or B port(2)	V_{CC} = 3.6 V	V_I = 5.5 V			20			20	
			V_I = V_{CC}			5			5	
			V_I = 0			–10			–10	
I_{off}		V_{CC} = 0,	V_I or V_O = 0 to 4.5 V						±100	µA
$I_{I(hold)}$	A or B port	V_{CC} = 3 V	V_I = 0.8 V	75			75			µA
			V_I = 2 V	–75			–75			
		V_{CC} = 3.6 V,(3)	V_I = 0 to 3.6 V						500 –750	
I_{OZPU}		V_{CC} = 0 to 1.5 V, V_O = 0.5 V to 3 V, $\overline{OE}$ = don't care				±100(4)			±100	µA
I_{OZPD}		V_{CC} = 1.5 V to 0, V_O = 0.5 V to 3 V, $\overline{OE}$ = don't care				±100(4)			±100	µA
I_{CC}		V_{CC} = 3.6 V, I_O = 0, V_I = V_{CC} or GND	Outputs high			0.19			0.19	mA
			Outputs low			5			5	
			Outputs disabled			0.19			0.19	
ΔI_{CC}(5)		V_{CC} = 3 V to 3.6 V, One input at V_{CC} – 0.6 V, Other inputs at V_{CC} or GND				0.3			0.2	mA
C_I		V_I = 3 V or 0			4			4		pF
C_{io}		V_O = 3 V or 0			10			10		pF

(1) All typical values are at V_{CC} = 3.3 V, T_A = 25°C.
(2) Unused pins at V_{CC} or GND
(3) This is the bus-hold maximum dynamic current. It is the minimum overdrive current required to switch the input from one state to another.
(4) On products compliant to MIL-PRF-38535, this parameter is not production tested.
(5) This is the increase in supply current for each input that is at the specified TTL voltage level, rather than V_{CC} or GND.

Switching Characteristics

over recommended operating free-air temperature range, C_L = 50 pF (unless otherwise noted) (see Figure 1)

PARAMETER	FROM (INPUT)	TO (OUTPUT)	SN54LVTH162245				SN74LVTH162245					UNIT
			V_{CC} = 3.3 V ± 0.3 V		V_{CC} = 2.7 V		V_{CC} = 3.3 V ± 0.3 V			V_{CC} = 2.7 V		
			MIN	MAX	MIN	MAX	MIN	TYP(1)	MAX	MIN	MAX	
t_{PLH}	A	B	1	3.5		4	1	2.3	3.3		3.7	ns
t_{PHL}			1	3.5		3.9	1	2.2	3.3		3.5	
t_{PLH}	B	A	1	4.3		5.3	1	2.8	4		4.6	ns
t_{PHL}			1	4.2		4.5	1	2.5	3.4		3.6	
t_{PZH}	$\overline{OE}$	B	1	4.8		5.9	1	2.8	4.6		5.4	ns
t_{PZL}			1	4.8		5.5	1	3	4.6		5.2	
t_{PZH}	$\overline{OE}$	A	1	5.5		7.2	1	3.3	5.3		6.3	ns
t_{PZH}			1	5.4		6.4	1	3.3	5.1		5.8	
t_{PHZ}	$\overline{OE}$	B	1.5	5.5		5.8	1.5	3.8	5.2		5.5	ns
t_{PLZ}			1.5	5.5		5.8	1.5	3.5	5.1		5.4	
t_{PHZ}	$\overline{OE}$	A	1.5	5.8		6.5	1.5	4	5.6		5.9	ns
t_{PLZ}			1.2	6.3		6.3	1.5	3.8	5.5		5.5	
$t_{sk(LH)}$									0.5			ns
$t_{sk(HL)}$									0.5			

(1) All typical values are at V_{CC} = 3.3 V, T_A = 25°C.

PARAMETER MEASUREMENT INFORMATION

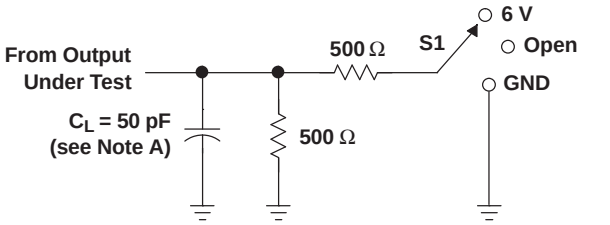

LOAD CIRCUIT

TEST	S1
t_{PLH}/t_{PHL}	Open
t_{PLZ}/t_{PZL}	6 V
t_{PHZ}/t_{PZH}	GND

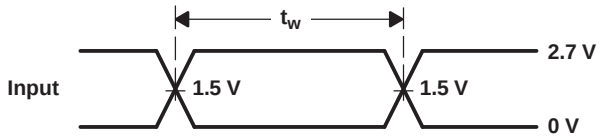

VOLTAGE WAVEFORMS
PULSE DURATION

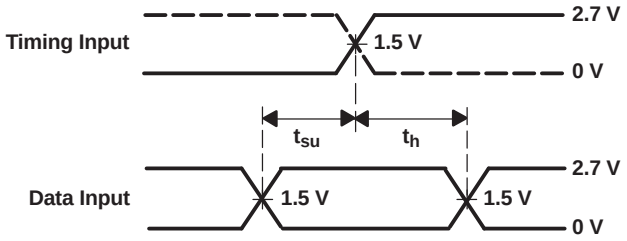

VOLTAGE WAVEFORMS
SETUP AND HOLD TIMES

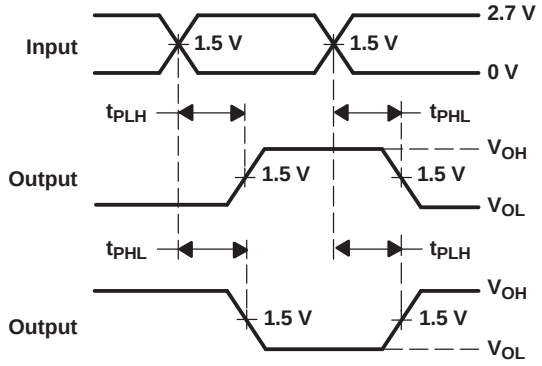

VOLTAGE WAVEFORMS
PROPAGATION DELAY TIMES
INVERTING AND NONINVERTING OUTPUTS

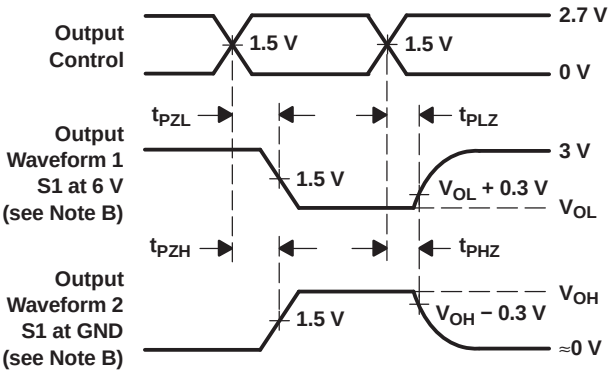

VOLTAGE WAVEFORMS
ENABLE AND DISABLE TIMES
LOW- AND HIGH-LEVEL ENABLING

NOTES: A. C_L includes probe and jig capacitance.
B. Waveform 1 is for an output with internal conditions such that the output is low, except when disabled by the output control. Waveform 2 is for an output with internal conditions such that the output is high, except when disabled by the output control.
C. All input pulses are supplied by generators having the following characteristics: PRR ≤ 10 MHz, Z_O = 50 Ω, t_r ≤ 2.5 ns, t_f ≤ 2.5 ns.
D. The outputs are measured one at a time, with one transition per measurement.

Figure 1. Load Circuit and Voltage Waveforms

PACKAGING INFORMATION

Orderable Device	Status (1)	Package Type	Package Drawing	Pins	Package Qty	Eco Plan (2)	Lead finish/ Ball material (6)	MSL Peak Temp (3)	Op Temp (°C)	Device Marking (4/5)	Samples
5962-9678001QXA	ACTIVE	CFP	WD	48	1	Non-RoHS & Green	SNPB	N / A for Pkg Type	-55 to 125	5962-9678001QX A SNJ54LVTH16224 5WD	Samples
5962-9678001VXA	ACTIVE	CFP	WD	48	1	Non-RoHS & Green	SNPB	N / A for Pkg Type	-55 to 125	5962-9678001VX A SNV54LVTH16224 5WD	Samples
74LVTH162245DGGRG4	ACTIVE	TSSOP	DGG	48	2000	RoHS & Green	NIPDAU	Level-1-260C-UNLIM	-40 to 85	LVTH162245	Samples
74LVTH162245GRE4	ACTIVE	TSSOP	DGG	48	2000	RoHS & Green	NIPDAU	Level-1-260C-UNLIM	-40 to 85	LVTH162245	Samples
SN74LVTH162245DGGR	ACTIVE	TSSOP	DGG	48	2000	RoHS & Green	NIPDAU	Level-1-260C-UNLIM	-40 to 85	LVTH162245	Samples
SN74LVTH162245DL	ACTIVE	SSOP	DL	48	25	RoHS & Green	NIPDAU	Level-1-260C-UNLIM	-40 to 85	LVTH162245	Samples
SN74LVTH162245DLG4	ACTIVE	SSOP	DL	48	25	RoHS & Green	NIPDAU	Level-1-260C-UNLIM	-40 to 85	LVTH162245	Samples
SN74LVTH162245DLR	ACTIVE	SSOP	DL	48	1000	RoHS & Green	NIPDAU	Level-1-260C-UNLIM	-40 to 85	LVTH162245	Samples
SNJ54LVTH162245WD	ACTIVE	CFP	WD	48	1	Non-RoHS & Green	SNPB	N / A for Pkg Type	-55 to 125	5962-9678001QX A SNJ54LVTH16224 5WD	Samples

(1) The marketing status values are defined as follows:
ACTIVE: Product device recommended for new designs.
LIFEBUY: TI has announced that the device will be discontinued, and a lifetime-buy period is in effect.
NRND: Not recommended for new designs. Device is in production to support existing customers, but TI does not recommend using this part in a new design.
PREVIEW: Device has been announced but is not in production. Samples may or may not be available.
OBSOLETE: TI has discontinued the production of the device.

(2) **RoHS:** TI defines "RoHS" to mean semiconductor products that are compliant with the current EU RoHS requirements for all 10 RoHS substances, including the requirement that RoHS substance do not exceed 0.1% by weight in homogeneous materials. Where designed to be soldered at high temperatures, "RoHS" products are suitable for use in specified lead-free processes. TI may reference these types of products as "Pb-Free".
RoHS Exempt: TI defines "RoHS Exempt" to mean products that contain lead but are compliant with EU RoHS pursuant to a specific EU RoHS exemption.
Green: TI defines "Green" to mean the content of Chlorine (Cl) and Bromine (Br) based flame retardants meet JS709B low halogen requirements of <=1000ppm threshold. Antimony trioxide based flame retardants must also meet the <=1000ppm threshold requirement.

(3) MSL, Peak Temp. - The Moisture Sensitivity Level rating according to the JEDEC industry standard classifications, and peak solder temperature.

(4) There may be additional marking, which relates to the logo, the lot trace code information, or the environmental category on the device.

(5) Multiple Device Markings will be inside parentheses. Only one Device Marking contained in parentheses and separated by a "~" will appear on a device. If a line is indented then it is a continuation of the previous line and the two combined represent the entire Device Marking for that device.

(6) Lead finish/Ball material - Orderable Devices may have multiple material finish options. Finish options are separated by a vertical ruled line. Lead finish/Ball material values may wrap to two lines if the finish value exceeds the maximum column width.

Important Information and Disclaimer: The information provided on this page represents TI's knowledge and belief as of the date that it is provided. TI bases its knowledge and belief on information provided by third parties, and makes no representation or warranty as to the accuracy of such information. Efforts are underway to better integrate information from third parties. TI has taken and continues to take reasonable steps to provide representative and accurate information but may not have conducted destructive testing or chemical analysis on incoming materials and chemicals. TI and TI suppliers consider certain information to be proprietary, and thus CAS numbers and other limited information may not be available for release.

In no event shall TI's liability arising out of such information exceed the total purchase price of the TI part(s) at issue in this document sold by TI to Customer on an annual basis.

OTHER QUALIFIED VERSIONS OF SN54LVTH162245, SN54LVTH162245-SP, SN74LVTH162245 :

- Catalog: SN74LVTH162245, SN54LVTH162245
- Enhanced Product: SN74LVTH162245-EP, SN74LVTH162245-EP
- Military: SN54LVTH162245
- Space: SN54LVTH162245-SP

NOTE: Qualified Version Definitions:

- Catalog - TI's standard catalog product
- Enhanced Product - Supports Defense, Aerospace and Medical Applications
- Military - QML certified for Military and Defense Applications
- Space - Radiation tolerant, ceramic packaging and qualified for use in Space-based application

TAPE AND REEL INFORMATION

REEL DIMENSIONS

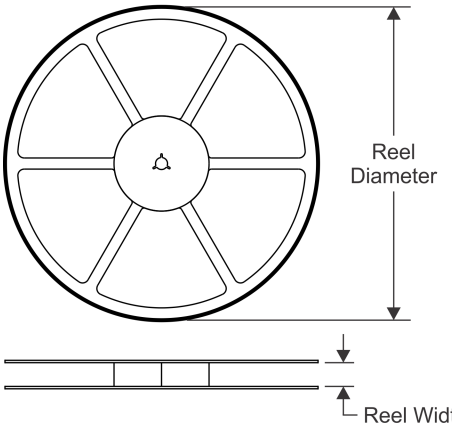

TAPE DIMENSIONS

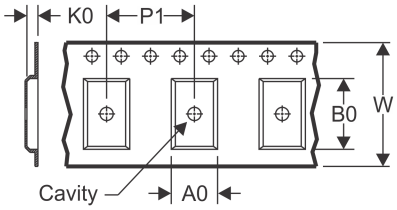

A0	Dimension designed to accommodate the component width
B0	Dimension designed to accommodate the component length
K0	Dimension designed to accommodate the component thickness
W	Overall width of the carrier tape
P1	Pitch between successive cavity centers

QUADRANT ASSIGNMENTS FOR PIN 1 ORIENTATION IN TAPE

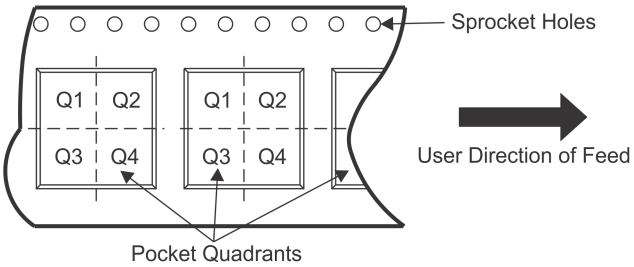

*All dimensions are nominal

Device	Package Type	Package Drawing	Pins	SPQ	Reel Diameter (mm)	Reel Width W1 (mm)	A0 (mm)	B0 (mm)	K0 (mm)	P1 (mm)	W (mm)	Pin1 Quadrant
SN74LVTH162245DGGR	TSSOP	DGG	48	2000	330.0	24.4	8.6	13.0	1.8	12.0	24.0	Q1
SN74LVTH162245DLR	SSOP	DL	48	1000	330.0	32.4	11.35	16.2	3.1	16.0	32.0	Q1

TAPE AND REEL BOX DIMENSIONS

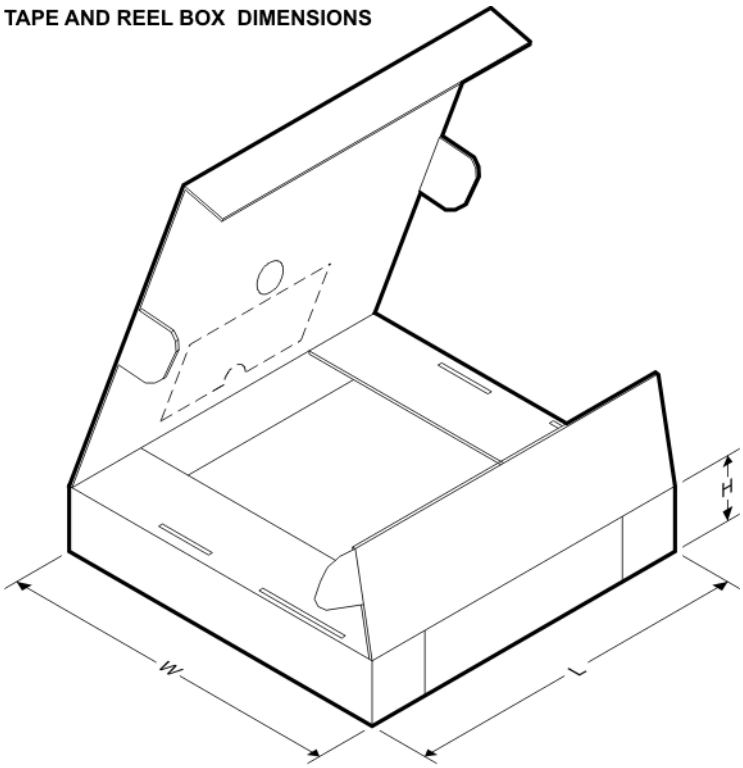

*All dimensions are nominal

Device	Package Type	Package Drawing	Pins	SPQ	Length (mm)	Width (mm)	Height (mm)
SN74LVTH162245DGGR	TSSOP	DGG	48	2000	367.0	367.0	45.0
SN74LVTH162245DLR	SSOP	DL	48	1000	367.0	367.0	55.0

TUBE

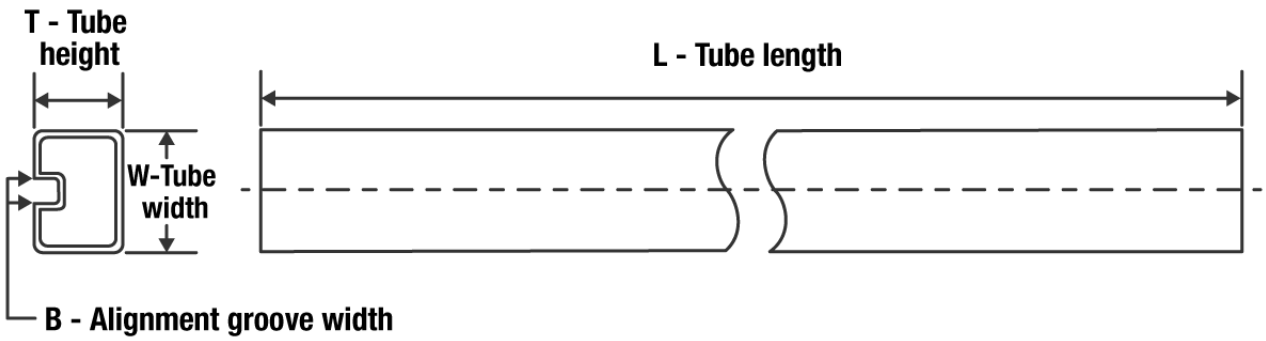

*All dimensions are nominal

Device	Package Name	Package Type	Pins	SPQ	L (mm)	W (mm)	T (µm)	B (mm)
SN74LVTH162245DL	DL	SSOP	48	25	473.7	14.24	5110	7.87
SN74LVTH162245DLG4	DL	SSOP	48	25	473.7	14.24	5110	7.87

WD (R-GDFP-F)** **CERAMIC DUAL FLATPACK**

48 LEADS SHOWN

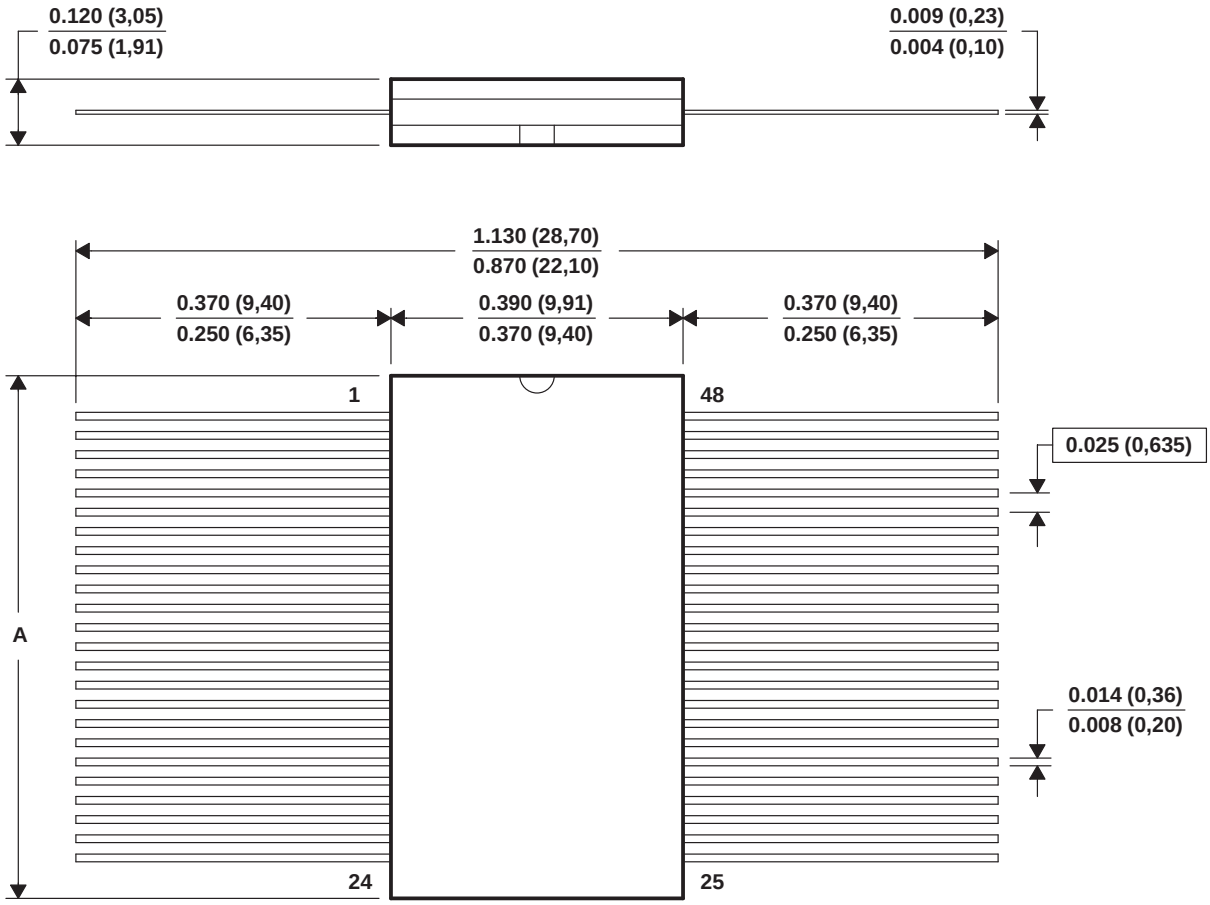

NO. OF LEADS**	48	56
A MAX	0.640 (16,26)	0.740 (18,80)
A MIN	0.610 (15,49)	0.710 (18,03)

4040176 / D 10/97

NOTES: A. All linear dimensions are in inches (millimeters).
B. This drawing is subject to change without notice.
C. This package can be hermetically sealed with a ceramic lid using glass frit.
D. Index point is provided on cap for terminal identification only
E. Falls within MIL STD 1835: GDFP1-F48 and JEDEC MO-146AA
GDFP1-F56 and JEDEC MO-146AB

DL (R–PDSO–G48) PLASTIC SMALL–OUTLINE PACKAGE

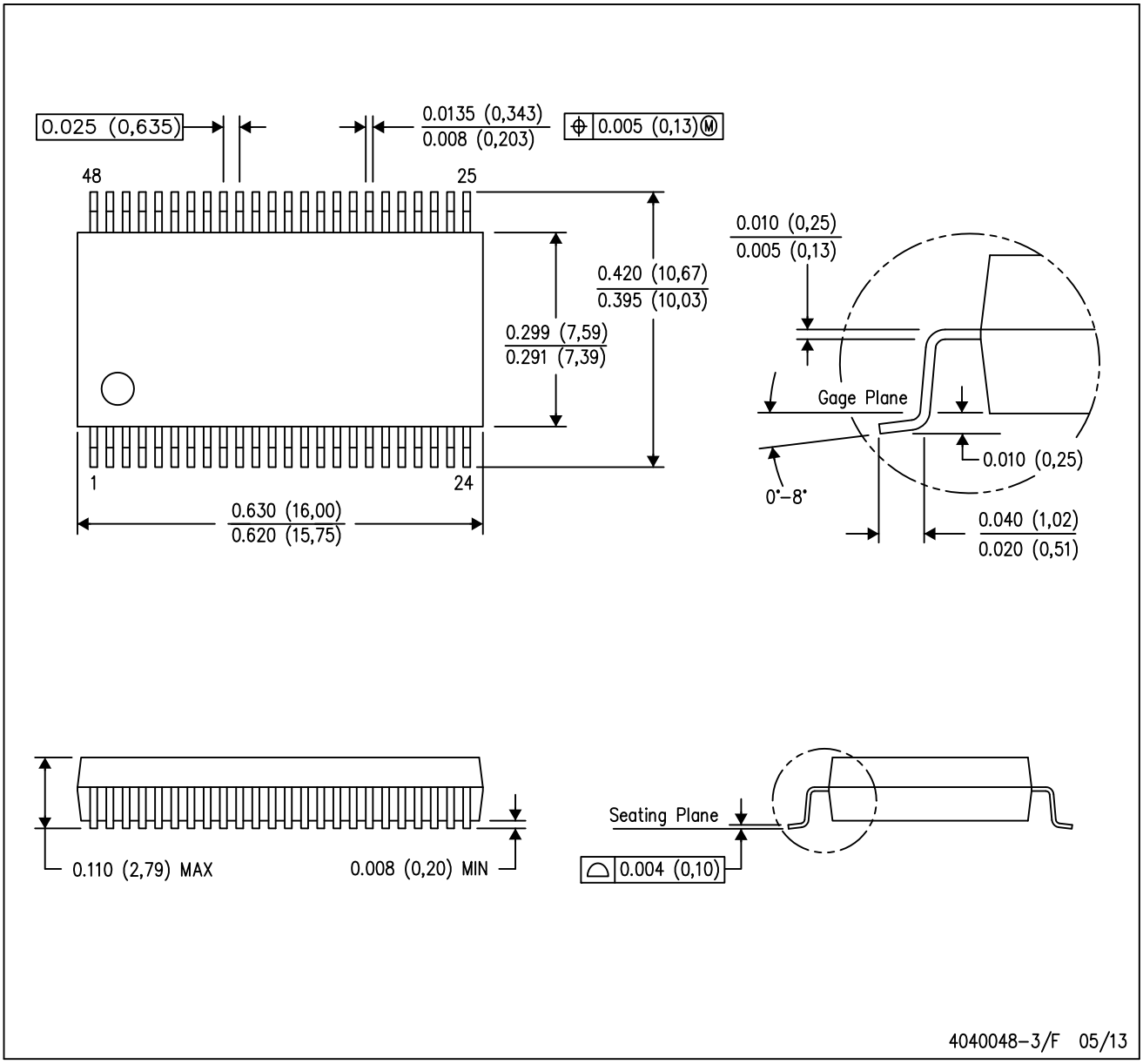

NOTES:
A. All linear dimensions are in inches (millimeters).
B. This drawing is subject to change without notice.
C. Body dimensions do not include mold flash or protrusion not to exceed 0.006 (0,15).
D. Falls within JEDEC MO–118

PowerPAD is a trademark of Texas Instruments.

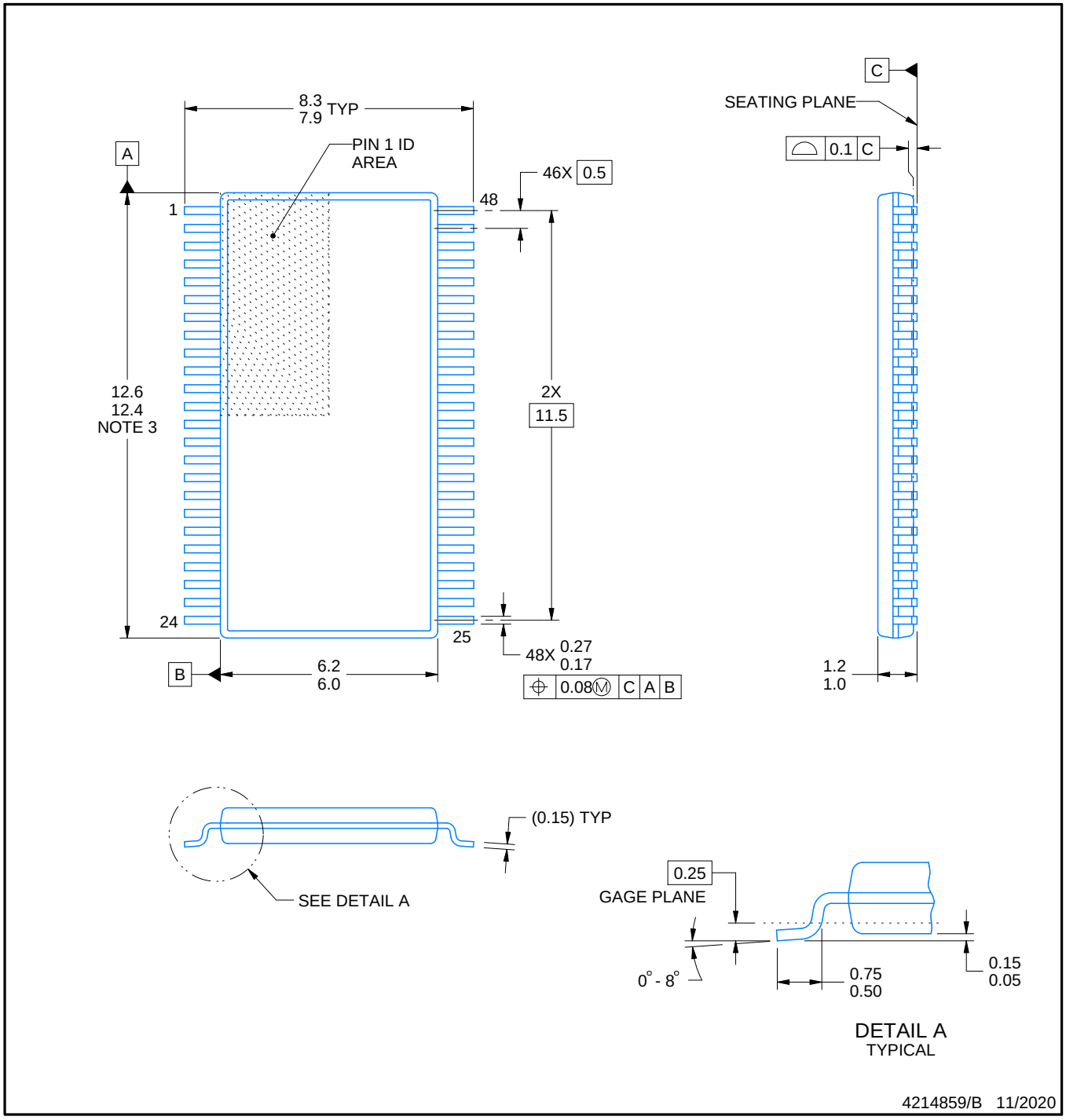

NOTES:

1. All linear dimensions are in millimeters. Any dimensions in parenthesis are for reference only. Dimensioning and tolerancing per ASME Y14.5M.
2. This drawing is subject to change without notice.
3. This dimension does not include mold flash, protrusions, or gate burrs. Mold flash, protrusions, or gate burrs shall not exceed 0.15 mm per side.
4. Reference JEDEC registration MO-153.

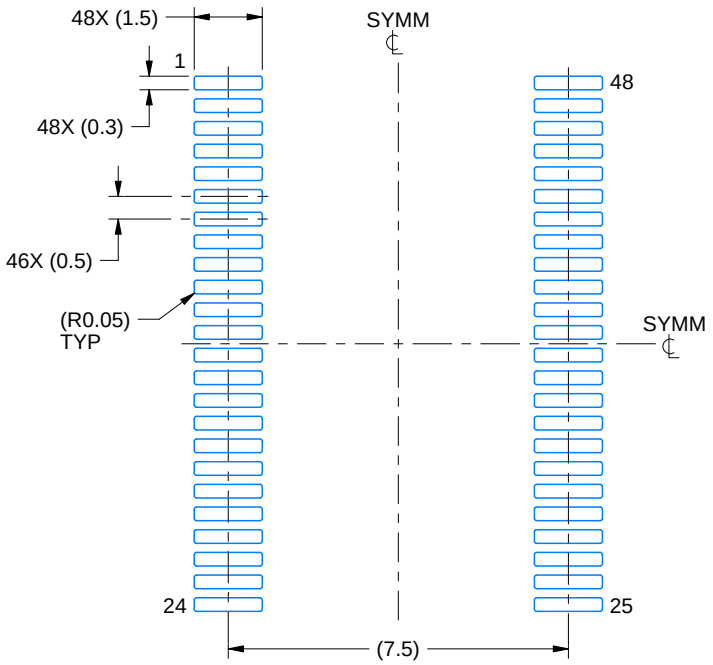

LAND PATTERN EXAMPLE
SCALE:6X

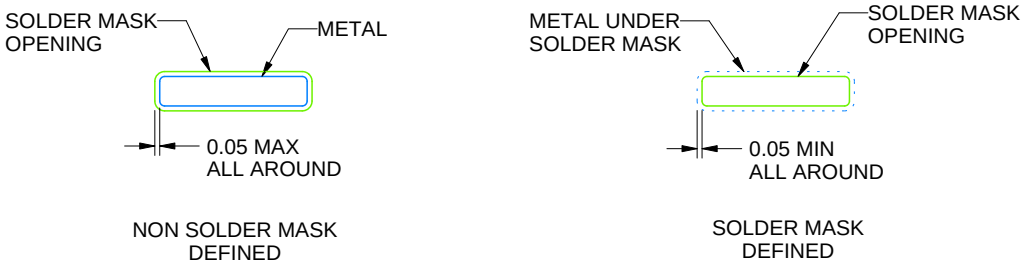

SOLDER MASK DETAILS

4214859/B 11/2020

NOTES: (continued)

5. Publication IPC-7351 may have alternate designs.
6. Solder mask tolerances between and around signal pads can vary based on board fabrication site.

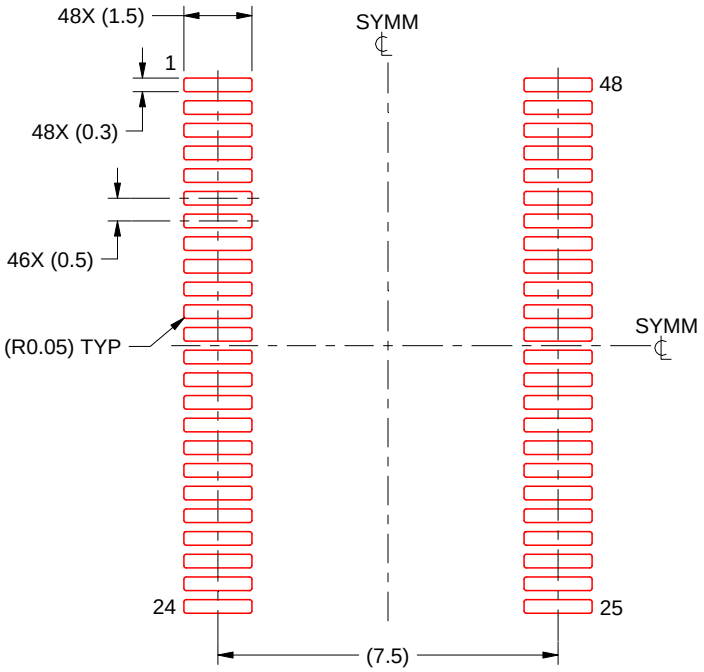

SOLDER PASTE EXAMPLE
BASED ON 0.125 mm THICK STENCIL
SCALE:6X

4214859/B 11/2020

NOTES: (continued)

7. Laser cutting apertures with trapezoidal walls and rounded corners may offer better paste release. IPC-7525 may have alternate design recommendations.
8. Board assembly site may have different recommendations for stencil design.

DGG (R-PDSO-G)** **PLASTIC SMALL-OUTLINE PACKAGE**

48 PINS SHOWN

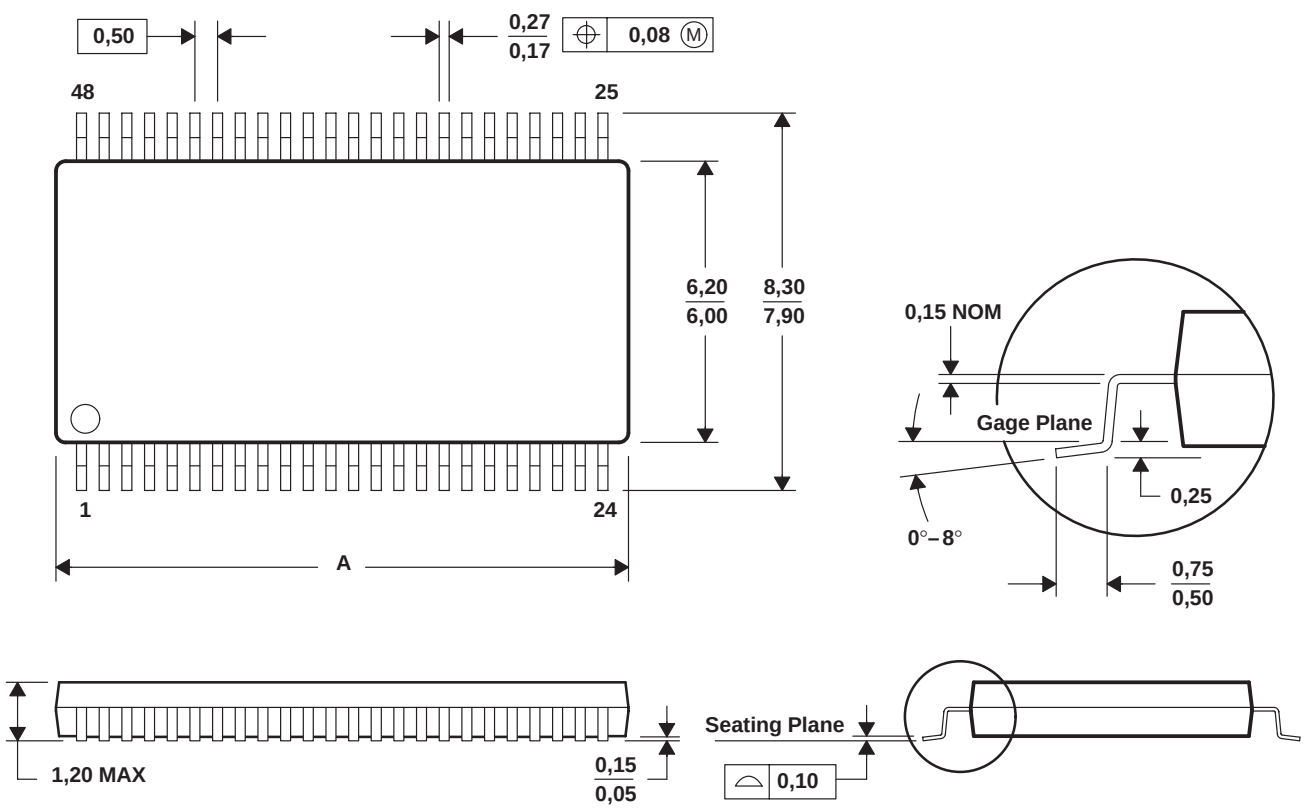

DIM \ PINS **	48	56	64
A MAX	12,60	14,10	17,10
A MIN	12,40	13,90	16,90

4040078/F 12/97

NOTES: A. All linear dimensions are in millimeters.
B. This drawing is subject to change without notice.
C. Body dimensions do not include mold protrusion not to exceed 0,15.
D. Falls within JEDEC MO-153

IMPORTANT NOTICE AND DISCLAIMER

TI PROVIDES TECHNICAL AND RELIABILITY DATA (INCLUDING DATA SHEETS), DESIGN RESOURCES (INCLUDING REFERENCE DESIGNS), APPLICATION OR OTHER DESIGN ADVICE, WEB TOOLS, SAFETY INFORMATION, AND OTHER RESOURCES “AS IS” AND WITH ALL FAULTS, AND DISCLAIMS ALL WARRANTIES, EXPRESS AND IMPLIED, INCLUDING WITHOUT LIMITATION ANY IMPLIED WARRANTIES OF MERCHANTABILITY, FITNESS FOR A PARTICULAR PURPOSE OR NON-INFRINGEMENT OF THIRD PARTY INTELLECTUAL PROPERTY RIGHTS.

These resources are intended for skilled developers designing with TI products. You are solely responsible for (1) selecting the appropriate TI products for your application, (2) designing, validating and testing your application, and (3) ensuring your application meets applicable standards, and any other safety, security, regulatory or other requirements.

These resources are subject to change without notice. TI grants you permission to use these resources only for development of an application that uses the TI products described in the resource. Other reproduction and display of these resources is prohibited. No license is granted to any other TI intellectual property right or to any third party intellectual property right. TI disclaims responsibility for, and you will fully indemnify TI and its representatives against, any claims, damages, costs, losses, and liabilities arising out of your use of these resources.

TI’s products are provided subject to TI’s Terms of Sale or other applicable terms available either on ti.com or provided in conjunction with such TI products. TI’s provision of these resources does not expand or otherwise alter TI’s applicable warranties or warranty disclaimers for TI products.

TI objects to and rejects any additional or different terms you may have proposed.

Mailing Address: Texas Instruments, Post Office Box 655303, Dallas, Texas 75265
Copyright © 2022, Texas Instruments Incorporated