- **Low Noise**
  10 Hz . . . 15 nV/√Hz
  1 kHz . . . 10.5 nV/√Hz
- **10000-pF Load Capability**
- **20-mA Min Short-Circuit Output Current**
- **27-V/μs Min Slew Rate**
- **High Gain-Bandwidth Product . . . 5.9 MHz**
- **Low V_{IO} . . . 500 μV Max at 25°C**
- **Single or Split Supply . . . 4 V to 44 V**
- **Fast Settling Time**
  340 ns to 0.1%
  400 ns to 0.01%
- **Saturation Recovery . . . 150 ns**
- **Large Output Swing**
  V_{CC-} +0.1 V to V_{CC+} – 1 V

description

The TLE214x and TLE214xA devices are high-performance, internally compensated operational amplifiers built using Texas Instruments complementary bipolar Excalibur process. The TLE214xA is a tighter offset voltage grade of the TLE214x. Both are pin-compatible upgrades to standard industry products.

The design incorporates an input stage that simultaneously achieves low audio-band noise of 10.5 nV/√Hz with a 10-Hz 1/f corner and symmetrical 40-V/μs slew rate typically with loads up to 800 pF. The resulting low distortion and high power bandwidth are important in high-fidelity audio applications. A fast settling time of 340 ns to 0.1% of a 10-V step with a 2-kΩ/100-pF load is useful in fast actuator/positioning drivers. Under similar test conditions, settling time to 0.01% is 400 ns.

The devices are stable with capacitive loads up to 10 nF, although the 6-MHz bandwidth decreases to 1.8 MHz at this high loading level. As such, the TLE214x and TLE214xA are useful for low-droop sample-and-holds and direct buffering of long cables, including 4-mA to 20-mA current loops.

The special design also exhibits an improved insensitivity to inherent integrated circuit component mismatches as is evidenced by a 500-μV maximum offset voltage and 1.7-μV/°C typical drift. Minimum common-mode rejection ratio and supply-voltage rejection ratio are 85 dB and 90 dB, respectively.

Device performance is relatively independent of supply voltage over the ±2-V to ±22-V range. Inputs can operate between V_{CC-} – 0.3 to V_{CC+} – 1.8 V without inducing phase reversal, although excessive input current may flow out of each input exceeding the lower common-mode input range. The all-npn output stage provides a nearly rail-to-rail output swing of V_{CC-} – 0.1 to V_{CC+} – 1 V under light current-loading conditions. The device can sustain shorts to either supply since output current is internally limited, but care must be taken to ensure that maximum package power dissipation is not exceeded.

Both versions can also be used as comparators. Differential inputs of $V_{CC\pm}$ can be maintained without damage to the device. Open-loop propagation delay with TTL supply levels is typically 200 ns. This gives a good indication as to output stage saturation recovery when the device is driven beyond the limits of recommended output swing.

Both the TLE214x and TLE214xA are available in a wide variety of packages, including both the industry-standard 8-pin small-outline version and chip form for high-density system applications. The C-suffix devices are characterized for operation from 0°C to 70°C, I-suffix devices from −40°C to 105°C, and M-suffix devices over the full military temperature range of −55°C to 125°C.

Please be aware that an important notice concerning availability, standard warranty, and use in critical applications of Texas Instruments semiconductor products and disclaimers thereto appears at the end of this data sheet.

PRODUCTION DATA information is current as of publication date. Products conform to specifications per the terms of Texas Instruments standard warranty. Production processing does not necessarily include testing of all parameters.

Copyright © 1997 – 2006, Texas Instruments Incorporated

TLE2141 AVAILABLE OPTIONS

T_A	V_{IO}max AT 25°C	PACKAGED DEVICES		
		SMALL OUTLINE† (D)	CERAMIC DIP (JG)	PLASTIC DIP (P)
0°C to 70°C	500 µV 900 µV	TLE2141ACD TLE2141CD	—	TLE2141ACP TLE2141CP
–40°C to 105°C	500 µV 900 µV	TLE2141AID TLE2141ID	—	TLE2141AIP TLE2141IP
–55°C to 125°C	500 µV 900 µV	— TLE2141MD	TLE2141AMJG TLE2141MJG	— —

† The D packages are available taped and reeled. Add R suffix to device type (e.g., TLE2141ACDR).

TLE2142 AVAILABLE OPTIONS

T_A	V_{IO}max AT 25°C	PACKAGED DEVICES					
		SMALL OUTLINE† (D)	CHIP CARRIER (FK)	CERAMIC DIP (JG)	PLASTIC DIP (P)	TSSOP‡ (PW)	CERAMIC FLAT PACK (U)
0°C to 70°C	750 µV	TLE2142ACD	—	—	TLE2142ACP	—	—
	1200 µV	TLE2142CD	—	—	TLE2142CP	TLE2142CPWLE	—
–40°C to 105°C	750 µV	TLE2142AID	—	—	TLC2142AIP	—	—
	1200 µV	TLE2142ID	—	—	TLC2142IP	—	—
–55°C to 125°C	750 µV	TLE2142AMD	TLE2142AMFK	TLE2142AMJG	—	—	TLE2142AMU
	1200 µV	TLE2142MD	TLE2142MFK	TLE2142MJG	—	—	TLE2142MU

† The D packages are available taped and reeled. Add R suffix to device type (e.g., TLC2142ACDR).
‡ The PW packages are available left-ended taped and reeled. Add LE the suffix to device type (e.g., TLC2142CPWLE).

TLE2144 AVAILABLE OPTIONS

T_A	V_{IO}max AT 25°C	PACKAGED DEVICES			
		SMALL OUTLINE† (DW)	CHIP CARRIER (FK)	CERAMIC DIP (J)	PLASTIC DIP (N)
0°C to 70°C	1.5 mV 2.4 mV	— TLE2144CDW	— —	— —	TLE2144ACN TLE2144CN
–40°C to 105°C	1.5 mV 2.4 mV	— TLE2144IDW	— —	— —	TLE2144AIN TLE2144IN
–55°C to 125°C	1.5 mV 2.5 mV	— TLE2144MDW	TLE2144AMFK TLE2144MFK	TLE2144AMJ TLE2144MJ	— —

† The DW packages are available taped and reeled. Add R suffix to device type (e.g., TLE2144CDWR).

symbol

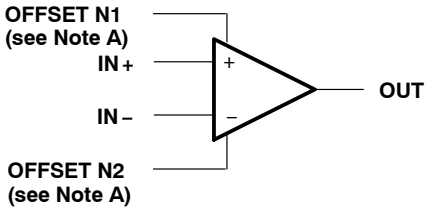

NOTES: A. OFFSET N1 AND OFFSET N2 are only availiable on the TLE2241x devices.

TLE2141
D, JG, OR P PACKAGE
(TOP VIEW)

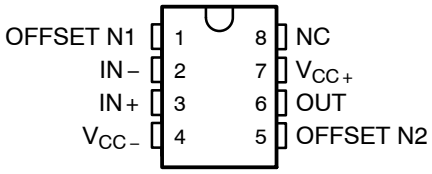

TLE2142
PW PACKAGE
(TOP VIEW)

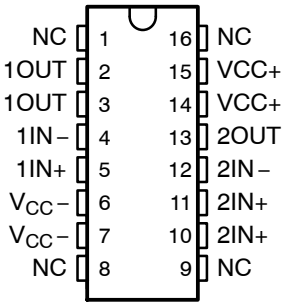

TLE2142
D, JG, OR P PACKAGE
(TOP VIEW)

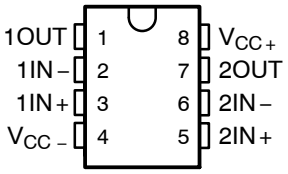

TLE2141
FK PACKAGE
(TOP VIEW)

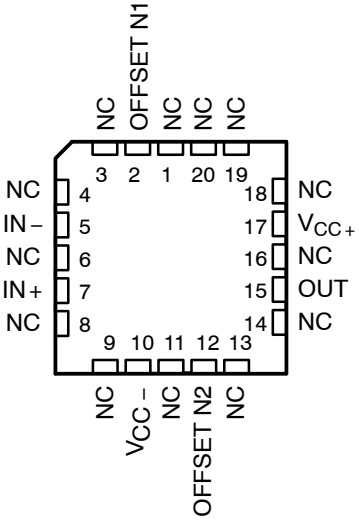

TLE2142
U PACKAGE
(TOP VIEW)

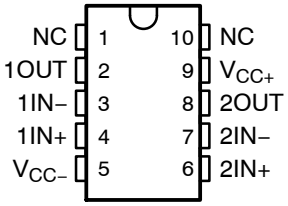

TLE2142
FK PACKAGE
(TOP VIEW)

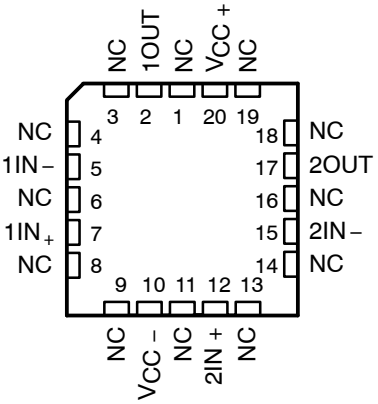

TLE2144
DW PACKAGE
(TOP VIEW)

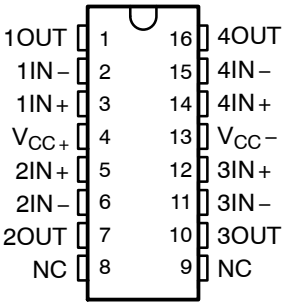

NC – No internal connection

TLE2144
J OR N PACKAGE
(TOP VIEW)

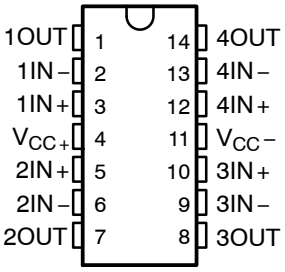

TLE2144
FK PACKAGE
(TOP VIEW)

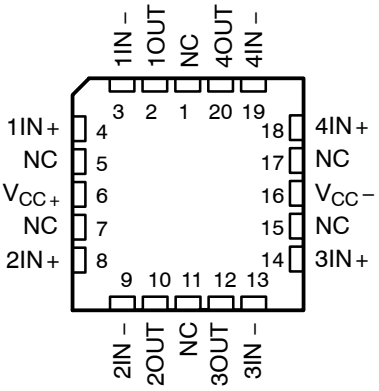

equivalent schematic

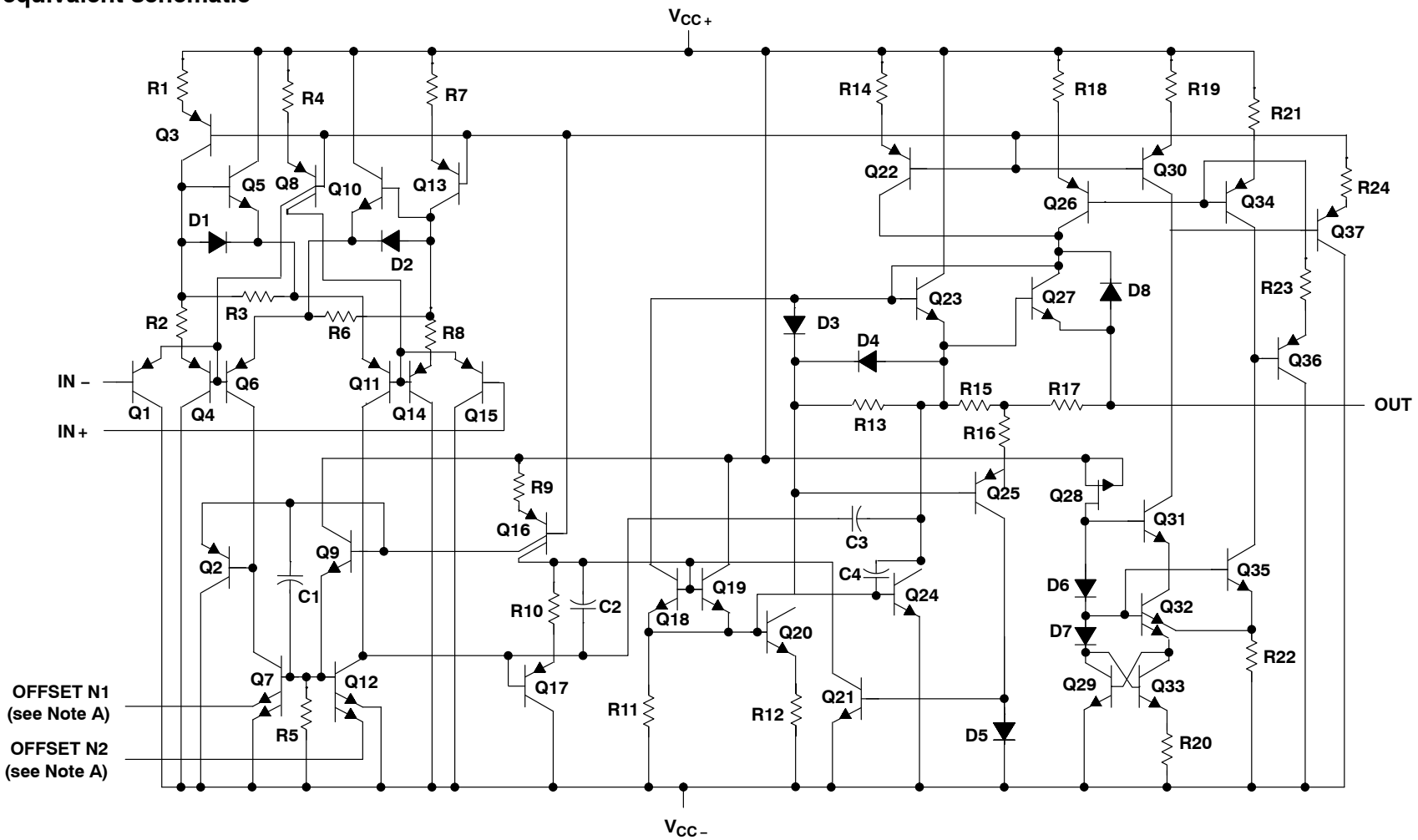

NOTE A: OFFSET N1 AND OFFSET N2 are only availiable on the TLE2141x devices.

ACTUAL DEVICE COMPONENT COUNT			
COMPONENT	TLE2141	TLE2142	TLE2144
Transistors	46	65	130
Resistors	24	43	86
Diodes	8	14	28
Capacitors	4	8	16
Epi-FET	1	1	2

absolute maximum ratings over operating free-air temperature range (unless otherwise noted)†

Supply voltage, V_{CC+} (see Note 1)		22 V
Supply voltage, V_{CC-}		−22 V
Differential input voltage, V_{ID} (see Note 2)		±44 V
Input voltage range, V_I (any input)		V_{CC+} to V_{CC-} − 0.3 V
Input current, I_I (each input)		±1 mA
Output current, I_O		±80 mA
Total current into V_{CC+}		80 mA
Total current out of V_{CC-}		80 mA
Duration of short-circuit current at (or below) 25°C (see Note 3)		unlimited
Package thermal impedance, θ_{JA} (see Notes 4 and 5):	D package	97.1°C/W
	DW package	57.3°C/W
	N package	79.7°C/W
	P package	84.6°C/W
	PW package	108.4°C/W
Package thermal impedance, θ_{JC} (see Notes 4 and 5):	FK package	5.6°C/W
	J package	15.1°C/W
	JG package	14.5°C/W
	U package	14.7°C/W
Operating free-air temperature range, T_A:	C suffix	0°C to 70°C
	I suffix	−40°C to 105°C
	M suffix	−55°C to 125°C
Storage temperature range		−65°C to 150°C
Case temperature for 60 seconds: FK package		260°C
Lead temperature 1,6 mm (1/16 inch) from case for 10 seconds: D, DW, N, P, or PW package		260°C
Lead temperature 1,6 mm (1/16 inch) from case for 60 seconds: J or JG package		300°C

† Stresses beyond those listed under "absolute maximum ratings" may cause permanent damage to the device. These are stress ratings only, and functional operation of the device at these or any other conditions beyond those indicated under "recommended operating conditions" is not implied. Exposure to absolute-maximum-rated conditions for extended periods may affect device reliability.

NOTES:
1. All voltage values, except differential voltages, are with respect to the midpoint between V_{CC+} and V_{CC-}.
2. Differential voltages are at IN+ with respect to IN−. Excessive current flows, if input, are brought below V_{CC-} − 0.3 V.
3. The output may be shorted to either supply. Temperature and/or supply voltages must be limited to ensure that the maximum dissipation rating is not exceeded.
4. Maximum power dissipation is a function of $T_J(max)$, θ_{JA}, and T_A. The maximum allowable power dissipation at any allowable ambient temperature is $P_D = (T_J(max) - T_A)/\theta_{JA}$. Operating at the absolute maximum T_J of 150°C can affect reliability.
5. The package thermal impedance is calculated in accordance with JESD 51-7 (plastic) or MIL-STD-883 Method 1012 (ceramic).

recommended operating conditions

		C SUFFIX		I SUFFIX		M SUFFIX		UNIT
		MIN	MAX	MIN	MAX	MIN	MAX	
Supply voltage, $V_{CC\pm}$		±2	±22	±2	±22	±2	±22	V
Common-mode input voltage, V_{IC}	V_{CC} = 5 V	0	2.9	0	2.7	0	2.7	V
	$V_{CC\pm}$ = ±15 V	−15	12.9	−15	12.7	−15	12.7	
Operating free-air temperature, T_A		0	70	−40	105	−55	125	°C

TLE2141C electrical characteristics at specified free-air temperature, V_{CC} = 5 V (unless otherwise noted)

PARAMETER		TEST CONDITIONS	T_A†	TLE2141C			TLE2141AC			UNIT
				MIN	TYP	MAX	MIN	TYP	MAX	
V_{IO}	Input offset voltage	V_O = 2.5 V, V_{IC} = 2.5 V, R_S = 50 Ω	25°C		225	1400		200	1000	μV
			Full range			1700			1300	
α_{VIO}	Temperature coefficient of input offset voltage		Full range		1.7			1.7		μV/°C
I_{IO}	Input offset current		25°C		8	100		8	100	nA
			Full range			150			150	
I_{IB}	Input bias current		25°C		−0.8	−2		−0.8	−2	μA
			Full range			−2.1			−2.1	
V_{ICR}	Common-mode input voltage range	R_S = 50 Ω	25°C	0 to 3	−0.3 to 3.2		0 to 3	−0.3 to 3.2		V
			Full range	0 to 2.9			0 to 2.9			
V_{OH}	High-level output voltage	I_{OH} = −150 μA	25°C	3.9	4.1		3.9	4.1		V
			Full range	3.8			3.8			
		I_{OH} = −1.5 mA	25°C	3.8	4		3.8	4		
			Full range	3.7			3.7			
		I_{OH} = −15 mA	25°C	3.2	3.7		3.2	3.7		
			Full range	3.2			3.2			
V_{OL}	Low-level output voltage	I_{OL} = 150 μA	25°C		75	125		75	125	mV
			Full range			150			150	
		I_{OL} = 1.5 mA	25°C		150	225		150	225	
			Full range			250			250	
		I_{OL} = 15 mA	25°C		1.2	1.6		1.2	1.6	V
			Full range			1.7			1.7	
A_{VD}	Large-signal differential voltage amplification	V_{CC} = ±2.5 V, R_L = 2 kΩ, V_O = 1 V to −1.5 V	25°C	50	220		50	220		V/mV
			Full range	25			25			
r_i	Input resistance		25°C		70			70		MΩ
c_i	Input capacitance		25°C		2.5			2.5		pF
z_o	Open-loop output impedance	f = 1 MHz	25°C		30			30		Ω
CMRR	Common-mode rejection ratio	V_{IC} = V_{ICR}min, R_S = 50 Ω	25°C	85	118		85	118		dB
			Full range	80			80			
k_{SVR}	Supply-voltage rejection ratio ($\Delta V_{CC\pm}/\Delta V_{IO}$)	$V_{CC\pm}$ = ±2.5 V to ±15 V, R_S = 50 Ω	25°C	90	106		90	106		dB
			Full range	85			85			
I_{CC}	Supply current	V_O = 2.5 V, V_{IC} = 2.5 V, No load,	25°C		3.4	4.4		3.4	4.4	mA
			Full range			4.6			4.6	

† Full range is 0°C to 70°C.

TLE2141C operating characteristics, V_{CC} = 5 V, T_A = 25°C

PARAMETER		TEST CONDITIONS		TLE2141C			TLE2141AC			UNIT
				MIN	TYP	MAX	MIN	TYP	MAX	
SR+	Positive slew rate	A_{VD} = –1, C_L = 500 pF†,	R_L = 2 kΩ,†,		45			45		V/µs
SR–	Negative slew rate				42			42		
t_s	Settling time	A_{VD} = –1, 2.5-V step	To 0.1%		0.16			0.16		µs
			To 0.01%		0.22			0.22		
V_n	Equivalent input noise voltage	R_S = 20 Ω,	f = 10 Hz		15			15		nV/√Hz
		R_S = 20 Ω,	f = 1 kHz		10.5			10.5		
$V_{N(PP)}$	Peak-to-peak equivalent input noise voltage	f = 0.1 Hz to 1 Hz			0.48			0.48		µV
		f = 0.1 Hz to 10 Hz			0.51			0.51		
I_n	Equivalent input noise current	f = 10 Hz			1.92			1.92		pA/√Hz
		f = 1 kHz			0.5			0.5		
THD + N	Total harmonic distortion plus noise	V_O = 1 V to 3 V, A_{VD} = 2,	R_L = 2 kΩ†, f = 10 kHz		0.0052%			0.0052%		
B_1	Unity-gain bandwidth	R_L = 2 kΩ†,	C_L = 100 pF†		5.9			5.9		MHz
	Gain-bandwidth product	R_L = 2 kΩ†, f = 100 kHz	C_L = 100 pF†,		5.8			5.8		MHz
B_{OM}	Maximum output-swing bandwidth	$V_{O(PP)}$ = 2 V, A_{VD} = 1,	R_L = 2 kΩ†, C_L = 100 pF†		660			660		kHz
ϕ_m	Phase margin at unity gain	R_L = 2 kΩ†,	C_L = 100 pF†		57°			57°		

† R_L and C_L terminated to 2.5 V.

TLE2141C electrical characteristics at specified free-air temperature, $V_{CC\pm}$ = ±15 V (unless otherwise noted)

PARAMETER		TEST CONDITIONS		T_A†	TLE2141C MIN	TLE2141C TYP	TLE2141C MAX	TLE2141AC MIN	TLE2141AC TYP	TLE2141AC MAX	UNIT
V_{IO}	Input offset voltage	V_{IC} = 0, V_O = 0	R_S = 50 Ω,	25°C		200	900		175	500	μV
				Full range			1300			800	
α_{VIO}	Temperature coefficient of input offset voltage			Full range		1.7			1.7		μV/°C
I_{IO}	Input offset current			25°C		7	100		7	100	nA
				Full range			150			150	
I_{IB}	Input bias current			25°C		−0.7	−1.5		−0.7	−1.5	μA
				Full range			−1.6			−1.6	
V_{ICR}	Common-mode input voltage range	R_S = 50 Ω		25°C	−15 to 13	−15.3 to 13.2		−15 to 13	−15.3 to 13.2		V
				Full range	−15 to 12.9	−15.3 to 13.1		−15 to 12.9	−15.3 to 13.1		
V_{OM+}	Maximum positive peak output voltage swing	I_O = −150 μA		25°C	13.8	14.1		13.8	14.1		V
				Full range	13.7			13.7			
		I_O = −1.5 mA		25°C	13.7	14		13.7	14		
				Full range	13.6			13.6			
		I_O = −15 mA		25°C	13.1	13.7		13.1	13.7		
				Full range	13			13			
V_{OM-}	Maximum negative peak output voltage swing	I_O = 150 μA		25°C	−14.7	−14.9		−14.7	−14.9		V
				Full range	−14.6			−14.6			
		I_O = 1.5 mA		25°C	−14.5	−14.8		−14.5	−14.8		
				Full range	−14.4			−14.4			
		I_O = 15 mA		25°C	−13.4	−13.8		−13.4	−13.8		
				Full range	−13.3			−13.3			
A_{VD}	Large-signal differential voltage amplification	V_O = ±10 V		25°C	100	450		100	450		V/mV
				Full range	75			75			
r_i	Input resistance	R_L = 2 kΩ		25°C		65			65		MΩ
c_i	Input capacitance			25°C		2.5			2.5		pF
z_o	Open-loop output impedance	f = 1 MHz		25°C		30			30		Ω
CMRR	Common-mode rejection ratio	V_{IC} = V_{ICR}min,	R_S = 50 Ω	25°C	85	108		85	108		dB
				Full range	80			80			
k_{SVR}	Supply-voltage rejection ratio ($\Delta V_{CC\pm}/\Delta V_{IO}$)	$V_{CC\pm}$ = ±2.5 V to ±15 V, R_S = 50 Ω		25°C	90	106		90	106		dB
				Full range	85			85			
I_{OS}	Short-circuit output current	V_O = 0	V_{ID} = 1 V	25°C	−25	−50		−25	−50		mA
			V_{ID} = −1 V		20	31		20	31		
I_{CC}	Supply current	V_O = 0,	No load	25°C		3.5	4.5		3.5	4.5	mA
				Full range			4.7			4.7	

† Full range is 0°C to 70°C.

TLE2141C operating characteristics, $V_{CC\pm}$ = ±15 V, T_A = 25°C

PARAMETER		TEST CONDITIONS		TLE2141C			TLE2141AC			UNIT
				MIN	TYP	MAX	MIN	TYP	MAX	
SR+	Positive slew rate	A_{VD} = –1, C_L = 500 pF	R_L = 2 kΩ,	27	45		27	45		V/µs
SR–	Negative slew rate			27	42		27	42		
t_s	Settling time	A_{VD} = –1, 10-V step	To 0.1%		0.34			0.34		µs
			To 0.01%		0.4			0.4		
V_n	Equivalent input noise voltage	R_S = 20 Ω,	f = 10 Hz		15			15		nV/√Hz
		R_S = 20 Ω,	f = 1 kHz		10.5			10.5		
$V_{N(PP)}$	Peak-to-peak equivalent input noise voltage	f = 0.1 Hz to 1 Hz			0.48			0.48		µV
		f = 0.1 Hz to 10 Hz			0.51			0.51		
I_n	Equivalent input noise current	f = 10 Hz			1.89			1.89		pA/√Hz
		f = 1 kHz			0.47			0.47		
THD + N	Total harmonic distortion plus noise	$V_{O(PP)}$ = 20 V, A_{VD} = 10,	R_L = 2 kΩ, f = 10 kHz		0.01%			0.01%		
B_1	Unity-gain bandwidth	R_L = 2 kΩ,	C_L = 100 pF		6			6		MHz
	Gain-bandwidth product	R_L = 2 kΩ, f = 100 kHz	C_L = 100 pF,		5.9			5.9		MHz
B_{OM}	Maximum output-swing bandwidth	$V_{O(PP)}$ = 20 V, A_{VD} = 1,	R_L = 2 kΩ, C_L = 100 pF		668			668		kHz
ϕ_m	Phase margin at unity gain	R_L = 2 kΩ,	C_L = 100 pF		58°			58°		

TLE2142C electrical characteristics at specified free-air temperature, V_{CC} = 5 V (unless otherwise noted)

PARAMETER		TEST CONDITIONS	T_A†	TLE2142C			TLE2142AC			UNIT
				MIN	TYP	MAX	MIN	TYP	MAX	
V_{IO}	Input offset voltage	V_O = 2.5 V, R_S = 50 Ω, V_{IC} = 2.5 V	25°C		220	1900		200	1500	μV
			Full range			2200			1800	
α_{VIO}	Temperature coefficient of input offset voltage		Full range		1.7			1.7		μV/°C
I_{IO}	Input offset current		25°C		8	100		8	100	nA
			Full range			150			150	
I_{IB}	Input bias current		25°C		−0.8	−2		−0.8	−2	μA
			Full range			−2.1			−2.1	
V_{ICR}	Common-mode input voltage range	R_S = 50 Ω	25°C	0 to 3	−0.3 to 3.2		0 to 3	−0.3 to 3.2		V
			Full range	0 to 2.9			0 to 2.9			
V_{OH}	High-level output voltage	I_{OH} = −150 μA	25°C	3.9	4.1		3.9	4.1		V
			Full range	3.8			3.8			
		I_{OH} = −1.5 mA	25°C	3.8	4		3.8	4		
			Full range	3.7			3.7			
		I_{OH} = −15 mA	25°C	3.4	3.7		3.4	3.7		
			Full range	3.4			3.4			
V_{OL}	Low-level output voltage	I_{OL} = 150 μA	25°C		75	125		75	125	mV
			Full range			150			150	
		I_{OL} = 1.5 mA	25°C		150	225		150	225	
			Full range			250			250	
		I_{OL} = 15 mA	25°C		1.2	1.4		1.2	1.4	V
			Full range			1.5			1.5	
A_{VD}	Large-signal differential voltage amplification	V_{CC} = ±2.5 V, R_L = 2 kΩ, V_O = 1 V to −1.5 V	25°C	50	220		50	220		V/mV
			Full range	25			25			
r_i	Input resistance		25°C		70			70		MΩ
c_i	Input capacitance		25°C		2.5			2.5		pF
z_o	Open-loop output impedance	f = 1 MHz	25°C		30			30		Ω
CMRR	Common-mode rejection ratio	V_{IC} = V_{ICR}min, R_S = 50 Ω	25°C	85	118		85	118		dB
			Full range	80			80			
k_{SVR}	Supply-voltage rejection ratio ($\Delta V_{CC\pm}/\Delta V_{IO}$)	$V_{CC\pm}$ = ±2.5 V to ±15 V, R_S = 50 Ω	25°C	90	106		90	106		dB
			Full range	85			85			
I_{CC}	Supply current	V_O = 2.5 V, No load, V_{IC} = 2.5 V	25°C		6.6	8.8		6.6	8.8	mA
			Full range			9.2			9.2	

† Full range is 0°C to 70°C.

TLE2142C operating characteristics, V_{CC} = 5 V, T_A = 25°C

PARAMETER		TEST CONDITIONS		TLE2142C			TLE2142AC			UNIT
				MIN	TYP	MAX	MIN	TYP	MAX	
SR+	Positive slew rate	A_{VD} = –1, C_L = 500 pF	R_L = 2 kΩ†,		45			45		V/µs
SR–	Negative slew rate				42			42		
t_s	Settling time	A_{VD} = –1, 2.5-V step	To 0.1%		0.16			0.16		µs
			To 0.01%		0.22			0.22		
V_n	Equivalent input noise voltage	R_S = 20 Ω,	f = 10 Hz		15			15		nV/√Hz
		R_S = 20 Ω,	f = 1 kHz		10.5			10.5		
$V_{N(PP)}$	Peak-to-peak equivalent input noise voltage	f = 0.1 Hz to 1 Hz			0.48			0.48		µV
		f = 0.1 Hz to 10 Hz			0.51			0.51		
I_n	Equivalent input noise current	f = 10 Hz			1.92			1.92		pA/√Hz
		f = 1 kHz			0.5			0.5		
THD + N	Total harmonic distortion plus noise	V_O = 1 V to 3 V, A_{VD} = 2,	R_L = 2 kΩ†, f = 10 kHz		0.0052%			0.0052%		
B1	Unity-gain bandwidth	R_L = 2 kΩ†,	C_L = 100 pF		5.9			5.9		MHz
	Gain-bandwidth product	R_L = 2 kΩ†, f = 100 kHz	C_L = 100 pF,		5.8			5.8		MHz
B_{OM}	Maximum output-swing bandwidth	$V_{O(PP)}$ = 2 V, A_{VD} = 1,	R_L = 2 kΩ†, C_L = 100 pF		660			660		kHz
ϕ_m	Phase margin at unity gain	R_L = 2 kΩ†,	C_L = 100 pF		57°			57°		

† R_L terminates at 2.5 V.

TLE2142C electrical characteristics at specified free-air temperature, $V_{CC\pm}$ = ±15 V (unless otherwise noted)

PARAMETER		TEST CONDITIONS		T_A†	TLE2142C MIN	TLE2142C TYP	TLE2142C MAX	TLE2142AC MIN	TLE2142AC TYP	TLE2142AC MAX	UNIT
V_{IO}	Input offset voltage	V_{IC} = 0, V_O = 0	R_S = 50 Ω,	25°C		290	1200		275	750	µV
				Full range			1600			1200	
α_{VIO}	Temperature coefficient of input offset voltage			Full range		1.7			1.7		µV/°C
I_{IO}	Input offset current			25°C		7	100		7	100	nA
				Full range			150			150	
I_{IB}	Input bias current			25°C		−0.7	−1.5		−0.7	−1.5	µA
				Full range			−1.6			−1.6	
V_{ICR}	Common-mode input voltage range	R_S = 50 Ω		25°C	−15 to 13	−15.3 to 13.2		−15 to 13	−15.3 to 13.2		V
				Full range	−15 to 12.9	−15.3 to 13.1		−15 to 12.9	−15.3 to 13.1		
V_{OM+}	Maximum positive peak output voltage swing	I_O = −150 µA		25°C	13.8	14.1		13.8	14.1		V
				Full range	13.7			13.7			
		I_O = −1.5 mA		25°C	13.7	14		13.7	14		
				Full range	13.6			13.6			
		I_O = −15 mA		25°C	13.3	13.7		13.3	13.7		
				Full range	13.2			13.2			
V_{OM-}	Maximum negative peak output voltage swing	I_O = 150 µA		25°C	−14.7	−14.9		−14.7	−14.9		V
				Full range	−14.6			−14.6			
		I_O = 1.5 mA		25°C	−14.5	−14.8		−14.5	−14.8		
				Full range	−14.4			−14.4			
		I_O = 15 mA		25°C	−13.4	−13.8		−13.4	−13.8		
				Full range	−13.3			−13.3			
A_{VD}	Large-signal differential voltage amplification	V_O = ±10 V		25°C	100	450		100	450		V/mV
				Full range	75			75			
r_i	Input resistance	R_L = 2 kΩ		25°C		65			65		MΩ
c_i	Input capacitance			25°C		2.5			2.5		pF
z_o	Open-loop output impedance	f = 1 MHz		25°C		30			30		Ω
CMRR	Common-mode rejection ratio	V_{IC} = V_{ICR}min, R_S = 50 Ω		25°C	85	108		85	108		dB
				Full range	80			80			
k_{SVR}	Supply-voltage rejection ratio ($\Delta V_{CC\pm}/\Delta V_{IO}$)	$V_{CC\pm}$ = ± 2.5 V to ±15 V, R_S = 50 Ω		25°C	90	106		90	106		dB
				Full range	85			85			
I_{OS}	Short-circuit output current	V_O = 0	V_{ID} = 1 V	25°C	−25	−50		−25	−50		mA
			V_{ID} = −1 V		20	31		20	31		
I_{CC}	Supply current	V_O = 0,	No load	25°C		6.9	9		6.9	9	mA
				Full range			9.4			9.4	

† Full range is 0°C to 70°C.

TLE2142C operating characteristics, $V_{CC\pm}$ = ±15 V, T_A = 25°C

PARAMETER		TEST CONDITIONS		TLE2142C			TLE2142AC			UNIT
				MIN	TYP	MAX	MIN	TYP	MAX	
SR+	Positive slew rate	A_{VD} = –1, C_L = 500 pF	R_L = 2 kΩ,	27	45		27	45		V/µs
SR–	Negative slew rate			27	42		27	42		
t_s	Settling time	A_{VD} = –1, 10-V step	To 0.1%		0.34			0.34		µs
			To 0.01%		0.4			0.4		
V_n	Equivalent input noise voltage	R_S = 20 Ω,	f = 10 Hz		15			15		nV/√Hz
		R_S = 20 Ω,	f = 1 kHz		10.5			10.5		
$V_{N(PP)}$	Peak-to-peak equivalent input noise voltage	f = 0.1 Hz to 1 Hz			0.48			0.48		µV
		f = 0.1 Hz to 10 Hz			0.51			0.51		
I_n	Equivalent input noise current	f = 10 Hz			1.89			1.89		pA/√Hz
		f = 1 kHz			0.47			0.47		
THD + N	Total harmonic distortion plus noise	$V_{O(PP)}$ = 20 V, A_{VD} = 10,	R_L = 2 kΩ, f = 10 kHz		0.01%			0.01%		
B_1	Unity-gain bandwidth	R_L = 2 kΩ,	C_L = 100 pF		6			6		MHz
	Gain-bandwidth product	R_L = 2 kΩ,, f =100 kHz	C_L = 100 pF,		5.9			5.9		MHz
B_{OM}	Maximum output-swing bandwidth	$V_{O(PP)}$ = 20 V, A_{VD} = 1,	R_L = 2 kΩ, C_L = 100 pF		668			668		kHz
ϕ_m	Phase margin at unity gain	R_L = 2 kΩ,	C_L = 100 pF		58°			58°		

TLE2144C electrical characteristics at specified free-air temperature, V_{CC} = 5 V (unless otherwise noted)

PARAMETER		TEST CONDITIONS	T_A†	TLE2144C			TLE2144AC			UNIT
				MIN	TYP	MAX	MIN	TYP	MAX	
V_{IO}	Input offset voltage	V_O = 2.5 V, V_{IC} = 2.5 V, R_S = 50 Ω,	25°C		0.5	3.8		0.5	3	mV
			Full range			4.4			3.6	
α_{VIO}	Temperature coefficient of input offset voltage		Full range		1.7			1.7		μV/°C
I_{IO}	Input offset current		25°C		8	100		8	100	nA
			Full range			150			150	
I_{IB}	Input bias current		25°C		−0.8	−2		−0.8	−2	μA
			Full range			−2.1			−2.1	
V_{ICR}	Common-mode input voltage range	R_S = 50 Ω	25°C	0 to 3	−0.3 to 3.2		0 to 3	−0.3 to 3.2		V
			Full range	0 to 2.9			0 to 2.9			
V_{OH}	High-level output voltage	I_{OH} = −150 μA	25°C	3.9	4.1		3.9	4.1		V
			Full range	3.8			3.8			
		I_{OH} = −1.5 mA	25°C	3.8	4		3.8	4		
			Full range	3.7			3.7			
		I_{OH} = −15 mA	25°C	3.4	3.7		3.4	3.7		
			Full range	3.4			3.4			
V_{OL}	Low-level output voltage	I_{OL} = 150 μA	25°C		75	125		75	125	mV
			Full range			150			150	
		I_{OL} = 1.5 mA	25°C		150	225		150	225	
			Full range			250			250	
		I_{OL} = 15 mA	25°C		1.2	1.6		1.2	1.6	V
			Full range			1.7			1.7	
A_{VD}	Large-signal differential voltage amplification	V_{CC} = ±2.5 V, V_O = 1 V to −1.5 V, R_L = 2 kΩ,	25°C	50	95		50	95		V/mV
			Full range	25			25			
r_i	Input resistance		25°C		70			70		MΩ
c_i	Input capacitance		25°C		2.5			2.5		pF
z_o	Open-loop output impedance	f = 1 MHz	25°C		30			30		Ω
CMRR	Common-mode rejection ratio	V_{IC} = V_{ICR}min, R_S = 50 Ω	25°C	85	118		85	118		dB
			Full range	80			80			
k_{SVR}	Supply-voltage rejection ratio ($\Delta V_{CC\pm}/\Delta V_{IO}$)	$V_{CC\pm}$ = ±2.5 V to ±15 V, R_S = 50 Ω	25°C	90	106		90	106		dB
			Full range	85			85			
I_{CC}	Supply current	V_O = 2.5 V, V_{IC} = 2.5 V, No load,	25°C		13.2	17.6		13.2	17.6	mA
			Full range			18.5			18.5	

† Full range is 0°C to 70°C.

TLE2144C operating characteristics, V_{CC} = 5 V, T_A = 25°C

PARAMETER		TEST CONDITIONS		TLE2144C			TLE2144AC			UNIT
				MIN	TYP	MAX	MIN	TYP	MAX	
SR+	Positive slew rate	A_{VD} = –1, C_L = 500 pF	R_L = 2 kΩ†,		45			45		V/µs
SR–	Negative slew rate				42			42		
t_s	Settling time	A_{VD} = –1, 2.5-V step	To 0.1%		0.16			0.16		µs
			To 0.01%		0.22			0.22		
V_n	Equivalent input noise voltage	R_S = 20 Ω,	f = 10 Hz		15			15		nV/√Hz
		R_S = 20 Ω,	f = 1 kHz		10.5			10.5		
$V_{N(PP)}$	Peak-to-peak equivalent input noise voltage	f = 0.1 Hz to 1 Hz			0.48			0.48		µV
		f = 0.1 Hz to 10 Hz			0.51			0.51		
I_n	Equivalent input noise current	f = 10 Hz			1.92			1.92		pA/√Hz
		f = 1 kHz			0.5			0.5		
THD + N	Total harmonic distortion plus noise	V_O = 1 V to 3 V, A_{VD} = 2,	R_L = 2 kΩ†, f = 10 kHz		0.0052%			0.0052%		
B_1	Unity-gain bandwidth	R_L = 2 kΩ†,	C_L = 100 pF		5.9			5.9		MHz
	Gain-bandwidth product	R_L = 2 kΩ†, f = 100 kHz	C_L = 100 pF,		5.8			5.8		MHz
B_{OM}	Maximum output-swing bandwidth	$V_{O(PP)}$ = 2 V, A_{VD} = 1,	R_L = 2 kΩ†, C_L = 100 pF		660			660		kHz
ϕ_m	Phase margin at unity gain	R_L = 2 kΩ†,	C_L = 100 pF		57°			57°		

† R_L terminates at 2.5 V

TLE2144C electrical characteristics at specified free-air temperature, $V_{CC\pm}$ = ±15 V (unless otherwise noted)

PARAMETER		TEST CONDITIONS		T_A†	TLE2144C MIN	TLE2144C TYP	TLE2144C MAX	TLE2144AC MIN	TLE2144AC TYP	TLE2144AC MAX	UNIT
V_{IO}	Input offset voltage	V_{IC} = 0, V_O = 0	R_S = 50 Ω,	25°C		0.6	2.4		0.5	1.5	mV
				Full range			3.2			2.4	
α_{VIO}	Temperature coefficient of input offset voltage			Full range		1.7			1.7		µV/°C
I_{IO}	Input offset current			25°C		7	100		7	100	nA
				Full range			150			150	
I_{IB}	Input bias current			25°C		−0.7	−1.5		−0.7	−1.5	µA
				Full range			−1.6			−1.6	
V_{ICR}	Common-mode input voltage range	R_S = 50 Ω		25°C	−15 to 13	−15.3 to 13.2		−15 to 13	−15.3 to 13.2		V
				Full range	−15 to 12.9	−15.3 to 13.1		−15 to 12.9	−15 to 13.1		
V_{OM+}	Maximum positive peak output voltage swing	I_O = −150 µA		25°C	13.8	14.1		13.8	14.1		V
				Full range	13.7			13.7			
		I_O = −1.5 mA		25°C	13.7	14		13.7	14		
				Full range	13.6			13.6			
		I_O = −15 mA		25°C	13.1	13.7		13.1	13.7		
				Full range	13			13			
V_{OM-}	Maximum negative peak output voltage swing	I_O = 150 µA		25°C	−14.7	−14.9		−14.7	−14.9		V
				Full range	−14.6			−14.6			
		I_O = 1.5 mA		25°C	−14.5	−14.8		−14.5	−14.8		
				Full range	−14.4			−14.4			
		I_O = 15 mA		25°C	−13.4	−13.8		−13.4	−13.8		
				Full range	−13.3			−13.3			
A_{VD}	Large-signal differential voltage amplification	V_O = ±10 V		25°C	100	170		100	170		V/mV
				Full range	75			75			
r_i	Input resistance	R_L = 2 kΩ		25°C		65			65		MΩ
c_i	Input capacitance			25°C		2.5			2.5		pF
z_o	Open-loop output impedance	f = 1 MHz		25°C		30			30		Ω
CMRR	Common-mode rejection ratio	V_{IC} = V_{ICR}min,	R_S = 50 Ω	25°C	85	108		85	108		dB
				Full range	80			80			
k_{SVR}	Supply-voltage rejection ratio ($\Delta V_{CC\pm}/\Delta V_{IO}$)	$V_{CC\pm}$ = ±2.5 V to ±15 V, R_S = 50 Ω		25°C	90	106		90	106		dB
				Full range	85			85			
I_{OS}	Short-circuit output current	V_O = 0	V_{ID} = 1 V	25°C	−25	−50		−25	−50		mA
			V_{ID} = −1 V		20	31		20	31		
I_{CC}	Supply current	V_O = 0,	No load	25°C		13.8	18		13.8	18	mA
				Full range			18.8			18.8	

† Full range is 0°C to 70°C.

TLE2144C operating characteristics, $V_{CC\pm}$ = ±15 V, T_A = 25°C

PARAMETER		TEST CONDITIONS		TLE2144C			TLE2144AC			UNIT
				MIN	TYP	MAX	MIN	TYP	MAX	
SR+	Positive slew rate	A_{VD} = –1, C_L = 500 pF	R_L = 2 kΩ,	27	45		27	45		V/µs
SR–	Negative slew rate			27	42		27	42		
t_s	Settling time	A_{VD} = –1, 10-V step	To 0.1%		0.34			0.34		µs
			To 0.01%		0.4			0.4		
V_n	Equivalent input noise voltage	R_S = 20 Ω,	f = 10 Hz		15			15		nV/√Hz
		R_S = 20 Ω,	f = 1 kHz		10.5			10.5		
$V_{N(PP)}$	Peak-to-peak equivalent input noise voltage	f = 0.1 Hz to 1 Hz			0.48			0.48		µV
		f = 0.1 Hz to 10 Hz			0.51			0.51		
I_n	Equivalent input noise current	f = 10 Hz			1.89			1.89		pA/√Hz
		f = 1 kHz			0.47			0.47		
THD + N	Total harmonic distortion plus noise	$V_{O(PP)}$ = 20 V, A_{VD} = 10,	R_L = 2 kΩ, f = 10 kHz		0.01%			0.01%		
B_1	Unity-gain bandwidth	R_L = 2 kΩ,	C_L = 100 pF		6			6		MHz
	Gain-bandwidth product	R_L = 2 kΩ, f = 100 kHz	C_L = 100 pF,		5.9			5.9		MHz
B_{OM}	Maximum output-swing bandwidth	$V_{O(PP)}$ = 20 V, A_{VD} = 1,	R_L = 2 kΩ, C_L = 100 pF		668			668		kHz
ϕ_m	Phase margin at unity gain	R_L = 2 kΩ,	C_L = 100 pF		58°			58°		

TLE2141I electrical characteristics at specified free-air temperature, V_{CC} = 5 V (unless otherwise noted)

PARAMETER		TEST CONDITIONS	T_A†	TLE2141I			TLE2141AI			UNIT
				MIN	TYP	MAX	MIN	TYP	MAX	
V_{IO}	Input offset voltage	V_O = 2.5 V, R_S = 50 Ω, V_{IC} = 2.5 V	25°C		225	1400		200	1000	µV
			Full range			1900			1500	
α_{VIO}	Temperature coefficient of input offset voltage		Full range		1.7			1.7		µV/°C
I_{IO}	Input offset current		25°C		8	100		8	100	nA
			Full range			200			200	
I_{IB}	Input bias current		25°C		−0.8	−2		−0.8	−2	µA
			Full range			−2.2			−2.2	
V_{ICR}	Common-mode input voltage range	R_S = 50 Ω	25°C	0 to 3	−0.3 to 3.2		0 to 3	−0.3 to 3.2		V
			Full range	0 to 2.7	−0.3 to 2.9		0 to 2.7	−0.3 to 2.9		
V_{OH}	High-level output voltage	I_{OH} = −150 µA	25°C	3.9	4.1		3.9	4.1		V
		I_{OH} = −1.5 mA		3.8	4		3.8	4		
		I_{OH} = −15 mA		3.2	3.7		3.2	3.7		
		I_{OH} = −100 µA	Full range	3.8			3.8			
		I_{OH} = −1 mA		3.7			3.7			
		I_{OH} = −10 mA		3.3			3.3			
V_{OL}	Low-level output voltage	I_{OL} = 150 µA	25°C		75	125		75	125	mV
		I_{OL} = 1.5 µA			150	225		150	225	
		I_{OL} = 15 mA			1.2	1.6		1.2	1.6	V
		I_{OL} = 100 µA	Full range			175			175	mV
		I_{OL} = 1 mA				225			225	
		I_{OL} = 10 mA				1.4			1.4	V
A_{VD}	Large-signal differential voltage amplification	V_{CC} = ±2.5 V, R_L = 2 kΩ, V_O = 1 V to −1.5 V	25°C	50	220		50	220		V/mV
			Full range	10			10			
r_i	Input resistance		25°C		70			70		MΩ
c_i	Input capacitance		25°C		2.5			2.5		pF
z_o	Open-loop output impedance	f = 1 MHz	25°C		30			30		Ω
CMRR	Common-mode rejection ratio	V_{IC} = V_{ICR}min, R_S = 50 Ω	25°C	85	118		85	118		dB
			Full range	80			80			
k_{SVR}	Supply-voltage rejection ratio ($\Delta V_{CC\pm}/\Delta V_{IO}$)	$V_{CC\pm}$ = ±2.5 V to ±15 V, R_S = 50 Ω	25°C	90	106		90	106		dB
			Full range	85			85			
I_{CC}	Supply current	V_O = 2.5 V, No load, V_{IC} = 2.5 V	25°C		3.4	4.4		3.4	4.4	mA
			Full range			4.6			4.6	

† Full range is −40°C to 105°C.

TLE2141I operating characteristics, V_{CC} = 5 V, T_A = 25°C

PARAMETER		TEST CONDITIONS		TLE2141I			TLE2141AI			UNIT
				MIN	TYP	MAX	MIN	TYP	MAX	
SR+	Positive slew rate	A_{VD} = –1, C_L = 500 pF	R_L = 2 kΩ†,		45			45		V/µs
SR–	Negative slew rate				42			42		
t_s	Settling time	A_{VD} = –1, 2.5-V step	To 0.1%		0.16			0.16		µs
			To 0.01%		0.22			0.22		
V_n	Equivalent input noise voltage	R_S = 20 Ω,	f = 10 Hz		15			15		nV/√Hz
		R_S = 20 Ω,	f = 1 kHz		10.5			10.5		
$V_{N(PP)}$	Peak-to-peak equivalent input noise voltage	f = 0.1 Hz to 1 Hz			0.48			0.48		µV
		f = 0.1 Hz to 10 Hz			0.51			0.51		
I_n	Equivalent input noise current	f = 10 Hz			1.92			1.92		pA/√Hz
		f = 1 kHz			0.5			0.5		
THD + N	Total harmonic distortion plus noise	V_O = 1 V to 3 V, A_{VD} = 2,	R_L = 2 kΩ†, f = 10 kHz		0.0052%			0.0052%		
B_1	Unity-gain bandwidth	R_L = 2 kΩ†,	C_L = 100 pF†		5.9			5.9		MHz
	Gain-bandwidth product	R_L = 2 kΩ† f = 100 kHz	C_L = 100 pF†,		5.8			5.8		MHz
B_{OM}	Maximum output-swing bandwidth	$V_{O(PP)}$ = 2 V, A_{VD} = 1,	R_L = 2 kΩ†, C_L = 100 pF†		660			660		kHz
ϕ_m	Phase margin at unity gain	R_L = 2 kΩ†,	C_L = 100 pF†		57°			57°		

† R_L and C_L terminated to 2.5 V.

TLE2141I electrical characteristics at specified free-air temperature, $V_{CC\pm}$ = ±15 V (unless otherwise noted)

PARAMETER		TEST CONDITIONS		T_A†	TLE2141I MIN	TLE2141I TYP	TLE2141I MAX	TLE2141AI MIN	TLE2141AI TYP	TLE2141AI MAX	UNIT
V_{IO}	Input offset voltage	V_{IC} = 0, V_O = 0	R_S = 50 Ω,	25°C		200	900		175	500	µV
				Full range			1500			1000	
α_{VIO}	Temperature coefficient of input offset voltage			Full range		1.7			1.7		µV/°C
I_{IO}	Input offset current			25°C		7	100		7	100	nA
				Full range			200			200	
I_{IB}	Input bias current			25°C		–0.7	–1.5		–0.7	–1.5	µA
				Full range			–1.7			–1.7	
V_{ICR}	Common-mode input voltage range	R_S = 50 Ω		25°C	–15 to 13	–15.3 to 13.2		–15 to 13	–15.3 to 13.2		V
				Full range	–15 to 12.7	–15.3 to 12.9		–15 to 12.7	–15.3 to 12.9		
V_{OM+}	Maximum positive peak output voltage swing	I_O = –150 µA		25°C	13.8	14.1		13.8	14.1		V
		I_O = –1.5 mA			13.7	14		13.7	14		
		I_O = –15 mA			13.1	13.7		13.1	13.7		
		I_O = –100 µA		Full range	13.7			13.7			
		I_O = –1 mA			13.6			13.6			
		I_O = –10 mA			13.1			13.1			
V_{OM-}	Maximum negative peak output voltage swing	I_O = 150 µA		25°C	–14.7	–14.9		–14.7	–14.9		V
		I_O = 1.5 mA			–14.5	–14.8		–14.5	–14.8		
		I_O = 15 mA			–13.4	–13.8		–13.4	–13.8		
		I_O = 100 µA		Full range	–14.6			–14.6			
		I_O = 1 mA			–14.5			–14.5			
		I_O = 10 mA			–13.4			–13.4			
A_{VD}	Large-signal differential voltage amplification	V_O = ±10 V,	R_L = 2 kΩ	25°C	100	450		100	450		V/mV
				Full range	40			40			
r_i	Input resistance			25°C		65			65		MΩ
c_i	Input capacitance			25°C		2.5			2.5		pF
z_o	Open-loop output impedance	f = 1 MHz		25°C		30			30		Ω
CMRR	Common-mode rejection ratio	V_{IC} = V_{ICR}min, R_S = 50 Ω		25°C	85	108		85	108		dB
				Full range	80			80			
k_{SVR}	Supply-voltage rejection ratio ($\Delta V_{CC\pm}/\Delta V_{IO}$)	$V_{CC\pm}$ = ±2.5 V to ±15 V, R_S = 50 Ω		25°C	90	106		90	106		dB
				Full range	85			85			
I_{OS}	Short-circuit output current	V_O = 0	V_{ID} = 1 V	25°C	–25	–50		–25	–50		mA
			V_{ID} = –1 V		20	31		20	31		
I_{CC}	Supply current	V_O = 0,	No load	25°C		3.5	4.5		3.5	4.5	mA
				Full range			4.7			4.7	

† Full range is –40°C to 105°C.

TLE2141I operating characteristics, $V_{CC\pm}$ = ±15 V, T_A = 25°C

PARAMETER		TEST CONDITIONS		TLE2141I			TLE2141AI			UNIT
				MIN	TYP	MAX	MIN	TYP	MAX	
SR+	Positive slew rate	A_{VD} = –1, C_L = 500 pF	R_L = 2 kΩ,	27	45		27	45		V/µs
SR–	Negative slew rate			27	42		27	42		
t_s	Settling time	A_{VD} = –1, 10-V step	To 0.1%		0.34			0.34		µs
			To 0.01%		0.4			0.4		
V_n	Equivalent input noise voltage	R_S = 20 Ω,	f = 10 Hz		15			15		nV/√Hz
		R_S = 20 Ω,	f = 1 kHz		10.5			10.5		
$V_{N(PP)}$	Peak-to-peak equivalent input noise voltage	f = 0.1 Hz to 1 Hz			0.48			0.48		µV
		f = 0.1 Hz to 10 Hz			0.51			0.51		
I_n	Equivalent input noise current	f = 10 Hz			1.89			1.89		pA/√Hz
		f = 1 kHz			0.47			0.47		
THD + N	Total harmonic distortion plus noise	$V_{O(PP)}$ = 20 V, A_{VD} = 10,	R_L = 2 kΩ, f = 10 kHz		0.01%			0.01%		
B_1	Unity-gain bandwidth	R_L = 2 kΩ,	C_L = 100 pF		6			6		MHz
	Gain-bandwidth product	R_L = 2 kΩ, f = 100 kHz	C_L = 100 pF,		5.9			5.9		MHz
B_{OM}	Maximum output-swing bandwidth	$V_{O(PP)}$ = 20 V, A_{VD} = 1,	R_L = 2 kΩ, C_L = 100 pF		668			668		kHz
ϕ_m	Phase margin at unity gain	R_L = 2 kΩ,	C_L = 100 pF		58°			58°		

TLE2142I electrical characteristics at specified free-air temperature, V_{CC} = 5 V (unless otherwise noted)

PARAMETER		TEST CONDITIONS		T_A†	TLE2142I			TLE2142AI			UNIT
					MIN	TYP	MAX	MIN	TYP	MAX	
V_{IO}	Input offset voltage	V_O = 2.5 V, R_S = 50 Ω, V_{IC} = 2.5 V		25°C		220	1900		220	1500	µV
				Full range			2400			2000	
α_{VIO}	Temperature coefficient of input offset voltage			Full range		1.7			1.7		µV/°C
I_{IO}	Input offset current			25°C		8	100		8	100	nA
				Full range			200			200	
I_{IB}	Input bias current			25°C		–0.8	–2		–0.8	–2	µA
				Full range			–2.2			–2.2	
V_{ICR}	Common-mode input voltage range	R_S = 50 Ω		25°C	0 to 3	–0.3 to 3.2		0 to 3	–0.3 to 3.2		V
				Full range	0 to 2.7	–0.3 to 2.9		0 to 2.7	–0.3 to 2.9		
V_{OH}	High-level output voltage	I_{OH} = –150 µA		25°C	3.9	4.1		3.9	4.1		V
		I_{OH} = –1.5 mA			3.8	4		3.8	4		
		I_{OH} = –15 mA			3.4	3.7		3.4	3.7		
		I_{OH} = 100 µA		Full range	3.8			3.8			
		I_{OH} = 1 mA			3.7			3.7			
		I_{OH} = 10 mA			3.5			3.5			
V_{OL}	Low-level output voltage	I_{OI} = 150 µA		25°C		75	125		75	125	mV
		I_{OL} = 1.5 mA				150	225		150	225	
		I_{OL} = 15 mA				1.2	1.4		1.2	1.4	V
		I_{OL} = 100 µA		Full range			175			175	mV
		I_{OL} = 1 mA					225			225	
		I_{OL} = 10 mA					1.2			1.2	V
A_{VD}	Large-signal differential voltage amplification	V_{IC} = ±2.5 V, R_L = 2 kΩ, V_O = 1 V to –1.5 V		25°C	50	220		50	220		V/mV
				Full range	10			10			
r_i	Input resistance			25°C		70			70		MΩ
c_i	Input capacitance			25°C		2.5			2.5		pF
z_o	Open-loop output impedance	f = 1 MHz		25°C		30			30		Ω
CMRR	Common-mode rejection ratio	V_{IC} = V_{ICR}min, R_S = 50 Ω		25°C	85	118		85	118		dB
				Full range	80			80			
k_{SVR}	Supply-voltage rejection ratio ($\Delta V_{CC\pm}$ /ΔV_{IO})	$V_{CC\pm}$ = ±2.5 V to ±15 V, R_S = 50 Ω		25°C	90	106		90	106		dB
				Full range	85			85			
I_{CC}	Supply current	V_O = 2.5 V, V_{IC} = 2.5 V	No load,	25°C		6.6	8.8		6.6	8.8	mA
				Full range			9.2			9.2	

† Full range is – 40°C to 105°C.

TLE2142I operating characteristics, V_{CC} = 5 V, T_A = 25°C

PARAMETER		TEST CONDITIONS		TLE2142I			TLE2142AI			UNIT
				MIN	TYP	MAX	MIN	TYP	MAX	
SR+	Positive slew rate	A_{VD} = –1, C_L = 500 pF	R_L = 2 kΩ†,		45			45		V/µs
SR–	Negative slew rate				42			42		
t_s	Settling time	A_{VD} = –1, 2.5-V step	To 0.1%		0.16			0.16		µs
			To 0.01%		0.22			0.22		
V_n	Equivalent input noise voltage	R_S = 20 Ω,	f = 10 Hz		15			15		nV/√Hz
		R_S = 20 Ω,	f = 1 kHz		10.5			10.5		
$V_{N(PP)}$	Peak-to-peak equivalent input noise voltage	f = 0.1 Hz to 1 Hz			0.48			0.48		µV
		f = 0.1 Hz to 10 Hz			0.51			0.51		
I_n	Equivalent input noise current	f = 10 Hz			1.92			1.92		pA/√Hz
		f = 1 kHz			0.5			0.5		
THD + N	Total harmonic distortion plus noise	V_O = 1 V to 3 V, A_{VD} = 2,	R_L = 2 kΩ†, f = 10 kHz		0.0052%			0.0052%		
B_1	Unity-gain bandwidth	R_L = 2 kΩ†,	C_L = 100 pF		5.9			5.9		MHz
	Gain-bandwidth product	R_L = 2 kΩ†, f = 100 kHz	C_L = 100 pF,		5.8			5.8		MHz
B_{OM}	Maximum output-swing bandwidth	$V_{O(PP)}$ = 2 V, A_{VD} = 1,	R_L = 2 kΩ†, C_L = 100 pF		660			660		kHz
ϕ_m	Phase margin at unity gain	R_L = 2 kΩ†,	C_L = 100 pF		57°			57°		

† R_L terminates at 2.5 V.

TLE2142I electrical characteristics at specified free-air temperature, $V_{CC\pm}$ = ±15 V (unless otherwise noted)

PARAMETER		TEST CONDITIONS		T_A†	TLE2142I MIN	TLE2142I TYP	TLE2142I MAX	TLE2142I MIN	TLE2142I TYP	TLE2142I MAX	UNIT
V_{IO}	Input offset voltage	V_{IC} = 0, V_O = 0	R_S = 50 Ω,	25°C		290	1200		275	750	μV
				Full range			1800			1400	
α_{VIO}	Temperature coefficient of input offset voltage			Full range		1.7			1.7		μV/°C
I_{IO}	Input offset current			25°C		7	100		7	100	nA
				Full range			200			200	
I_{IB}	Input bias current			25°C		−0.7	−1.5		−0.7	−1.5	μA
				Full range			−1.7			−1.7	
V_{ICR}	Common-mode input voltage range	R_S = 50 Ω		25°C	−15 to 13	−15.3 to 13.2		−15 to 13	−15.3 to 13.2		V
				Full range	−15 to 12.7	−15.3 to 12.9		−15 to 12.7	−15.3 to 12.9		
V_{OM+}	Maximum positive peak output voltage swing	I_O = −150 μA		25°C	13.8	14.1		13.8	14.1		V
		I_O = −1.5 mA			13.7	14		13.7	14		
		I_O = −15 mA			13.3	13.7		13.3	13.7		
		I_O = −100 μA		Full range	13.7			13.7			
		I_O = −1 mA			13.6			13.6			
		I_O = −10 mA			13.3			13.3			
V_{OM-}	Maximum negative peak output voltage swing	I_O = 150 μA		25°C	−14.7	−14.9		−14.7	−14.9		V
		I_O = 1.5 mA			−14.5	−14.8		−14.5	−14.8		
		I_O = 15 mA			−13.4	−13.8		−13.4	−13.8		
		I_O = 100 μA		Full range	−14.6			−14.6			
		I_O = 1 mA			−14.5			−14.5			
		I_O = 10 mA			−13.4			−13.4			
A_{VD}	Large-signal differential voltage amplification	V_O = ±10 V,	R_L = 2 kΩ	25°C	100	450		100	450		V/mV
				Full range	40			40			
r_i	Input resistance			25°C		65			65		MΩ
c_i	Input capacitance			25°C		2.5			2.5		pF
z_o	Open-loop output impedance	f = 1 MHz		25°C		30			30		Ω
CMRR	Common-mode rejection ratio	V_{IC} = V_{ICR}min		25°C	85	108		85	108		dB
		R_S = 50 Ω		Full range	80			80			
k_{SVR}	Supply-voltage rejection ratio ($\Delta V_{CC\pm}$ /ΔV_{IO})	$V_{CC\pm}$ = ±2.5 V to ±15 V, R_S = 50 Ω		25°C	90	106		90	106		dB
				Full range	85			85			
I_{OS}	Short-circuit output current	V_O = 0	V_{ID} = 1 V	25°C	−25	−50		−25	−50		mA
			V_{ID} = −1 V		20	31		20	31		
I_{CC}	Supply current	V_O = 0,	No load	25°C		6.9	9		6.9	9	mA
				Full range			9.4			9.4	

† Full range is −40°C to 105°C.

TLE2142I operating characteristics, $V_{CC\pm}$ = ±15 V, T_A = 25°C

PARAMETER		TEST CONDITIONS		TLE2142I			TLE2142AI			UNIT
				MIN	TYP	MAX	MIN	TYP	MAX	
SR+	Positive slew rate	A_{VD} = –1, C_L = 500 pF	R_L = 2 kΩ,	30	45		30	45		V/µs
SR–	Negative slew rate			30	42		30	42		
t_s	Settling time	A_{VD} = –1, 10-V step	To 0.1%		0.34			0.34		µs
			To 0.01%		0.4			0.4		
V_n	Equivalent input noise voltage	R_S = 20 Ω,	f = 10 Hz		15			15		nV/√Hz
		R_S = 20 Ω,	f = 1 kHz		10.5			10.5		
$V_{N(PP)}$	Peak-to-peak equivalent input noise voltage	f = 0.1 Hz to 1 Hz			0.48			0.48		µV
		f = 0.1 Hz to 10 Hz			0.51			0.51		
I_n	Equivalent input noise current	f = 10 Hz			1.89			1.89		pA/√Hz
		f = 1 kHz			0.47			0.47		
THD + N	Total harmonic distortion plus noise	$V_{O(PP)}$ = 20 V, A_{VD} = 10,	R_L = 2 kΩ, f = 10 kHz		0.01%			0.01%		
B_1	Unity-gain bandwidth	R_L = 2 kΩ,	C_L = 100 pF		6			6		MHz
	Gain-bandwidth product	R_L = 2 kΩ, f =100 kHz	C_L = 100 pF,		5.9			5.9		MHz
B_{OM}	Maximum output-swing bandwidth	$V_{O(PP)}$ = 20 V, A_{VD} = 1,	R_L = 2 kΩ, C_L = 100 pF		668			668		kHz
ϕ_m	Phase margin at unity gain	R_L = 2 kΩ,	C_L = 100 pF		58°			58°		

TLE2144I electrical characteristics at specified free-air temperature, V_{CC} = 5 V (unless otherwise noted)

PARAMETER		TEST CONDITIONS	T_A†	TLE2144I			TLE2144AI			UNIT
				MIN	TYP	MAX	MIN	TYP	MAX	
V_{IO}	Input offset voltage	V_{IC} = 0, V_O = 0, R_S = 50 Ω	25°C		0.5	3.8		0.5	3	mV
			Full range			4.8			4	
α_{VIO}	Temperature coefficient of input offset voltage		Full range		1.7			1.7		µV/°C
I_{IO}	Input offset current		25°C		8	100		8	100	nA
			Full range			200			200	
I_{IB}	Input bias current		25°C		–0.8	–2		–0.8	–2	µA
			Full range			–2.2			–2.2	
V_{ICR}	Common-mode input voltage range	R_S = 50 Ω	25°C	0 to 3	–0.3 to 3.2		0 to 3	–0.3 to 3.2		V
			Full range	0 to 2.7	–0.3 to 2.9		0 to 2.7	–0.3 to 2.9		
V_{OH}	High-level output voltage	I_{OH} = –150 µA	25°C	3.9	4.1		3.9	4.1		V
		I_{OH} = –1.5 mA		3.8	4		3.8	4		
		I_{OH} = –15 mA		3.4	3.7		3.4	3.7		
		I_{OH} = 100 µA	Full range	3.8			3.8			
		I_{OH} = 1 mA		3.7			3.7			
		I_{OH} = 10 mA		3.5			3.5			
V_{OL}	Low-level output voltage	I_{OL} = 150 µA	25°C		75	125		75	125	mV
		I_{OL} = 1.5 µA			150	225		150	225	
		I_{OL} = 15 mA			1.2	1.6		1.2	1.6	V
		I_{OL} = 100 µA	Full range			175			175	mV
		I_{OL} = 1 mA				225			225	
		I_{OL} = 10 mA				1.4			1.4	V
A_{VD}	Large-signal differential voltage amplification	V_{IC} = ±2.5 V, V_O = 1 V to –1.5 V, R_L = 2 kΩ,	25°C	50	95		50	95		V/mV
			Full range	10			10			
r_i	Input resistance		25°C		70			70		MΩ
c_i	Input capacitance		25°C		2.5			2.5		pF
z_o	Open-loop output impedance	f = 1 MHz	25°C		30			30		Ω
CMRR	Common-mode rejection ratio	V_{IC} = V_{ICR}min, R_S = 50 Ω	25°C	85	118		85	118		dB
			Full range	80			80			
k_{SVR}	Supply-voltage rejection ratio ($\Delta V_{CC\pm}/\Delta V_{IO}$)	$V_{CC\pm}$ = ±2.5 V to ±15 V, R_S = 50 Ω	25°C	90	106		90	106		dB
			Full range	85			85			
I_{CC}	Supply current	V_O = 2.5 V, V_{IC} = 2.5 V, No load,	25°C		13.2	17.6		13.2	17.6	mA
			Full range			18.4			18.4	

† Full range is –40°C to 105°C.

TLE2144I operating characteristics, V_{CC} = 5 V, T_A = 25°C

PARAMETER		TEST CONDITIONS		TLE2144I			TLE2144AI			UNIT
				MIN	TYP	MAX	MIN	TYP	MAX	
SR+	Positive slew rate	A_{VD} = –1, C_L = 500 pF	R_L = 2 kΩ†,		45			45		V/µs
SR–	Negative slew rate				42			42		
t_s	Settling time	A_{VD} = –1, 2.5-V step	To 0.1%		0.16			0.16		µs
			To 0.01%		0.22			0.22		
V_n	Equivalent input noise voltage	R_S = 20 Ω,	f = 10 Hz		15			15		nV/√Hz
		R_S = 20 Ω,	f = 1 kHz		10.5			10.5		
$V_{N(PP)}$	Peak-to-peak equivalent input noise voltage	f = 0.1 Hz to 1 Hz			0.48			0.48		µV
		f = 0.1 Hz to 10 Hz			0.51			0.51		
I_n	Equivalent input noise current	f = 10 Hz			1.92			1.92		pA/√Hz
		f = 10 kHz			0.5			0.5		
THD + N	Total harmonic distortion plus noise	V_O = 1 V to 3 V, A_{VD} = 2,	R_L = 2 kΩ†, f = 10 kHz		0.0052%			0.0052%		
B_1	Unity-gain bandwidth	R_L = 2 kΩ†,	C_L = 100 pF		5.9			5.9		MHz
	Gain-bandwidth product	R_L = 2 kΩ†, f = 100 kHz	C_L = 100 pF,		5.8			5.8		MHz
B_{OM}	Maximum output-swing bandwidth	$V_{O(PP)}$ = 2 V, A_{VD} = 1,	R_L = 2 kΩ†, C_L = 100 pF		660			660		kHz
ϕ_m	Phase margin at unity gain	R_L = 2 kΩ†,	C_L = 100 pF		57°			57°		

† R_L terminates at 2.5 V

TLE2144I electrical characteristics at specified free-air temperature, $V_{CC\pm}$ = ±15 V (unless otherwise noted)

PARAMETER		TEST CONDITIONS		T_A†	TLE2144I			TLE2144AI			UNIT
					MIN	TYP	MAX	MIN	TYP	MAX	
V_{IO}	Input offset voltage	V_{IC} = 0, V_O = 0	R_S = 50 Ω,	25°C		0.6	2.4		0.5	1.5	mV
				Full range			3.2			2.8	
α_{VIO}	Temperature coefficient of input offset voltage			Full range		1.7			1.7		µV/°C
I_{IO}	Input offset current			25°C		7	100		7	100	nA
				Full range			200			200	
I_{IB}	Input bias current			25°C		–0.7	–1.5		–0.7	–1.5	µA
				Full range			–1.7			–1.7	
V_{ICR}	Common-mode input voltage range	R_S = 50 Ω		25°C	–15 to 13	–15.3 to 13.2		–15 to 13	–15.3 to 13.2		V
				Full range	–15 to 12.7	–15.3 to 12.9		–15 to 12.7	–15.3 to 12.9		
V_{OM+}	Maximum positive peak output voltage swing	I_O = –150 µA		25°C	13.8	14.1		13.8	14.1		V
		I_O = –1.5 mA			13.7	14		13.7	14		
		I_O = –15 mA			13.1	13.7		13.1	13.7		
		I_O = –100 µA		Full range	13.7			13.7			
		I_O = –1 mA			13.6			13.6			
		I_O = –10 mA			13.1			13.1			
V_{OM-}	Maximum negative peak output voltage swing	I_O = 150 µA		25°C	–14.7	–14.9		–14.7	–14.9		V
		I_O = 1.5 mA			–14.5	–14.8		–14.5	–14.8		
		I_O = 15 mA			–13.4	–13.8		–13.4	–13.8		
		I_O = 100 µA		Full range	–14.6			–14.6			
		I_O = 1 mA			–14.5			–14.5			
		I_O = 10 mA			–13.4			–13.4			
A_{VD}	Large-signal differential voltage amplification	V_O = ±10 V,	R_L = 2 kΩ	25°C	100	170		100	170		V/mV
				Full range	40			40			
r_i	Input resistance			25°C		65			65		MΩ
c_i	Input capacitance			25°C		2.5			2.5		pF
z_o	Open-loop output impedance	f = 1 MHz		25°C		30			30		Ω
CMRR	Common-mode rejection ratio	V_{IC} = V_{ICR}min,	R_S = 50 Ω	25°C	85	108		85	108		dB
				Full range	80			80			
k_{SVR}	Supply-voltage rejection ratio ($\Delta V_{CC\pm}/\Delta V_{IO}$)	$V_{CC\pm}$ = ±2.5 V to ±15 V, R_S = 50 Ω		25°C	90	106		90	106		dB
				Full range	85			85			
I_{OS}	Short-circuit output current	V_O = 0	V_{ID} = 1 V	25°C	–25	–50		–25	–50		mA
			V_{ID} = –1 V		20	31		20	31		
I_{CC}	Supply current	V_O = 0,	No load	25°C		13.8	18		13.8	18	mA
				Full range			18.8			18.8	

† Full range is –40°C to 105°C.

TLE2144I operating characteristics, $V_{CC\pm}$ = ±15 V, T_A = 25°C

PARAMETER		TEST CONDITIONS		TLE2144I			TLE2144AI			UNIT
				MIN	TYP	MAX	MIN	TYP	MAX	
SR+	Positive slew rate	A_{VD} = –1, C_L = 500 pF	R_L = 2 kΩ,	27	45		27	45		V/µs
SR–	Negative slew rate			27	42		27	42		
t_s	Settling time	A_{VD} = –1, 10-V step	To 0.1%		0.34			0.34		µs
			To 0.01%		0.4			0.4		
V_n	Equivalent input noise voltage	R_S = 20 Ω,	f = 10 Hz		15			15		nV/√Hz
		R_S = 20 Ω,	f = 1 kHz		10.5			10.5		
$V_{N(PP)}$	Peak-to-peak equivalent input noise voltage	f = 0.1 Hz to 1 Hz			0.48			0.48		µV
		f = 0.1 Hz to 10 Hz			0.51			0.51		
I_n	Equivalent input noise current	f = 10 Hz			1.89			1.89		pA/√Hz
		f = 1 kHz			0.47			0.47		
THD + N	Total harmonic distortion plus noise	$V_{O(PP)}$ = 20 V, A_{VD} = 10,	R_L = 2 kΩ, f = 10 kHz		0.01%			0.01%		
B_1	Unity-gain bandwidth	R_L = 2 kΩ,	C_L = 100 pF		6			6		MHz
	Gain-bandwidth product	R_L = 2 kΩ, f = 100 kHz	C_L = 100 pF,		5.9			5.9		MHz
B_{OM}	Maximum output-swing bandwidth	$V_{O(PP)}$ = 20 V, A_{VD} = 1,	R_L = 2 kΩ, C_L = 100 pF		668			668		kHz
ϕ_m	Phase margin at unity gain	R_L = 2 kΩ,	C_L = 100 pF		58°			58°		

TLE2141M electrical characteristics at specified free-air temperature, V_{CC} = 5 V (unless otherwise noted)

PARAMETER		TEST CONDITIONS	T_A†	TLE2141M			TLE2141AM			UNIT
				MIN	TYP	MAX	MIN	TYP	MAX	
V_{IO}	Input offset voltage	V_O = 2.5 V, V_{IC} = 2.5 V, R_S = 50 Ω	25°C		225	1400		200	1000	µV
			Full range			2100			1700	
α_{VIO}	Temperature coefficient of input offset voltage		Full range		1.7			1.7		µV/°C
I_{IO}	Input offset current		25°C		8	100		8	100	nA
			Full range			250			250	
I_{IB}	Input bias current		25°C		−0.8	−2		−0.8	−2	µA
			Full range			−2.3			−2.3	
V_{ICR}	Common-mode input voltage range	R_S = 50 Ω	25°C	0 to 3	−0.3 to 3.2		0 to 3	−0.3 to 3.2		V
			Full range	0 to 2.7	−0.3 to 2.9		0 to 2.7	−0.3 to 2.9		
V_{OH}	High-level output voltage	I_{OH} = −150 µA	25°C	3.9	4.1		3.9	4.1		V
		I_{OH} = −1.5 mA		3.8	4		3.8	4		
		I_{OH} = −15 mA		3.2	3.7		3.2	3.7		
		I_{OH} = −100 µA	Full range	3.75			3.75			
		I_{OH} = −1 mA		3.65			3.65			
		I_{OH} = −10 mA		3.25			3.25			
V_{OL}	Low-level output voltage	I_{OL} = 150 µA	25°C		75	125		75	125	mV
		I_{OL} = 1.5 µA			150	225		150	225	
		I_{OL} = 15 mA			1.2	1.4		1.2	1.4	V
		I_{OL} = 100 µA	Full range			200			200	mV
		I_{OL} = 1 mA				250			225	
		I_{OL} = 10 mA				1.25			1.25	V
A_{VD}	Large-signal differential voltage amplification	V_{IC} = ±2.5 V, V_O = 1 V to −1.5 V, R_L = 2 kΩ,	25°C	50	220		50	220		V/mV
			Full range	5			5			
r_i	Input resistance		25°C		70			70		MΩ
c_i	Input capacitance		25°C		2.5			2.5		pF
z_o	Open-loop output impedance	f = 1 MHz	25°C		30			30		Ω
CMRR	Common-mode rejection ratio	V_{IC} = V_{ICR}min, R_S = 50 Ω	25°C	85	118		85	118		dB
			Full range	80			80			
k_{SVR}	Supply-voltage rejection ratio ($\Delta V_{CC\pm}/\Delta V_{IO}$)	$V_{CC\pm}$ = ±2.5 V to ±15 V, R_S = 50 Ω	25°C	90	106		90	106		dB
			Full range	85			85			
I_{CC}	Supply current	V_O = 2.5 V, V_{IC} = 2.5 V, No load,	25°C		3.4	4.4		3.4	4.4	mA
			Full range			4.6			4.6	

† Full range is −55°C to 125°C.

TLE2141M operating characteristics, V_{CC} = 5 V, T_A = 25°C

PARAMETER		TEST CONDITIONS		TLE2141M			TLE2141AM			UNIT
				MIN	TYP	MAX	MIN	TYP	MAX	
SR+	Positive slew rate	A_{VD} = –1, C_L = 500 pF	R_L = 2 kΩ†,		45			45		V/µs
SR–	Negative slew rate				42			42		
t_s	Settling time	A_{VD} = –1, 2.5-V step	To 0.1%		0.16			0.16		µs
			To 0.01%		0.22			0.22		
V_n	Equivalent input noise voltage	R_S = 20 Ω,	f = 10 Hz		15			15		nV/√Hz
		R_S = 20 Ω,	f = 1 kHz		10.5			10.5		
$V_{N(PP)}$	Peak-to-peak equivalent input noise voltage	f = 0.1 Hz to 1 Hz			0.48			0.48		µV
		f = 0.1 Hz to 10 Hz			0.51			0.51		
I_n	Equivalent input noise current	f = 10 Hz			1.92			1.92		pA/√Hz
		f = 1 kHz			0.5			0.5		
THD + N	Total harmonic distortion plus noise	V_O = 1 V to 3 V, A_{VD} = 2,	R_L = 2 kΩ†, f = 10 kHz		0.0052%			0.0052%		
B_1	Unity-gain bandwidth	R_L = 2 kΩ†,	C_L = 100 pF†		5.9			5.9		MHz
	Gain-bandwidth product	R_L = 2 kΩ†, f = 100 kHz	C_L = 100 pF†,		5.8			5.8		MHz
B_{OM}	Maximum output-swing bandwidth	$V_{O(PP)}$ = 2 V, A_{VD} = 1	R_L = 2 kΩ†,		660			660		kHz
ϕ_m	Phase margin at unity gain	R_L = 2 kΩ†,	C_L = 100 pF†		57°			57°		

† R_L and C_L terminated to 2.5 V.

TLE2141M electrical characteristics at specified free-air temperature, $V_{CC\pm}$ = ±15 V (unless otherwise noted)

PARAMETER		TEST CONDITIONS		T_A†	TLE2141M MIN	TLE2141M TYP	TLE2141M MAX	TLE2141AM MIN	TLE2141AM TYP	TLE2141AM MAX	UNIT
V_{IO}	Input offset voltage	V_{IC} = 0,	R_S = 50 Ω	25°C		200	900		175	500	µV
				Full range			1700			1200	
α_{VIO}	Temperature coefficient of input offset voltage			Full range		1.7			1.7		µV/°C
I_{IO}	Input offset current			25°C		7	100		7	100	nA
				Full range			250			250	
I_{IB}	Input bias current			25°C		–0.7	–1.5		–0.7	–1.5	µA
				Full range			–1.8			–1.8	
V_{ICR}	Common-mode input voltage range	R_S = 50 Ω		25°C	–15 to 13	–15.3 to 13.2		–15 to 13	–15.3 to 13.2		V
				Full range	–15 to 12.7	–15.3 to 12.9		–15 to 12.7	–15.3 to 12.9		
V_{OM+}	Maximum positive peak output voltage swing	I_O = –150 µA		25°C	13.8	14.1		13.8	14.1		V
		I_O = –1.5 mA			13.7	14		13.7	14		
		I_O = –15 mA			13.1	13.7		13.1	13.7		
		I_O = –100 µA		Full range	13.7			13.7			
		I_O = –1 mA			13.6			13.6			
		I_O = –10 mA			13.1			13.1			
V_{OM-}	Maximum negative peak output voltage swing	I_O = 150 µA		25°C	–14.7	–14.9		–14.7	–14.9		V
		I_O = 1.5 mA			–14.5	–14.8		–14.5	–14.8		
		I_O = 15 mA			–13.4	–13.8		–13.4	–13.8		
		I_O = 100 µA		Full range	–14.6			–14.6			
		I_O = 1 mA			–14.5			–14.5			
		I_O = 10 mA			–13.4			–13.4			
A_{VD}	Large-signal differential voltage amplification	V_O = ±10 V,	R_L = 2 kΩ	25°C	100	450		100	450		V/mV
				Full range	20			20			
r_i	Input resistance			25°C		65			65		MΩ
c_i	Input capacitance			25°C		2.5			2.5		pF
z_o	Open-loop output impedance	f = 1 MHz		25°C		30			30		Ω
CMRR	Common-mode rejection ratio	V_{IC} = V_{ICR}min,	R_S = 50 Ω	25°C	85	108		85	108		dB
				Full range	80			80			
k_{SVR}	Supply-voltage rejection ratio ($\Delta V_{CC\pm}/\Delta V_{IO}$)	$V_{CC\pm}$ = ±2.5 V to ±15 V, R_S = 50 Ω		25°C	90	106		90	106		dB
				Full range	85			85			
I_{OS}	Short-circuit output current	V_O = 0	V_{ID} = 1 V	25°C	–25	–50		–25	–50		mA
			V_{ID} = –1 V		20	31		20	31		
I_{CC}	Supply current	V_O = 0, V_{IC} = 2.5 V	No load,	25°C		3.5	4.5		3.5	4.5	mA
				Full range			4.7			4.7	

† Full range is –55°C to 125°C.

TLE2141M operating characteristics, $V_{CC\pm}$ = ±15 V, T_A = 25°C

PARAMETER		TEST CONDITIONS		TLE2141M			TLE2141AM			UNIT
				MIN	TYP	MAX	MIN	TYP	MAX	
SR+	Positive slew rate	A_{VD} = –1, C_L = 100 pF	R_L = 2 kΩ,	27	45		27	45		V/µs
SR–	Negative slew rate			27	42		27	42		
t_s	Settling time	A_{VD} = –1, 10-V step	To 0.1%		0.34			0.34		µs
			To 0.01%		0.4			0.4		
V_n	Equivalent input noise voltage	R_S = 20 Ω,	f = 10 Hz		15			15		nV/√Hz
		R_S = 20 Ω,	f = 1 kHz		10.5			10.5		
$V_{N(PP)}$	Peak-to-peak equivalent input noise voltage	f = 0.1 Hz to 1 Hz			0.48			0.48		µV
		f = 0.1 Hz to 10 Hz			0.51			0.51		
I_n	Equivalent input noise current	f = 10 Hz			1.89			1.89		pA/√Hz
		f = 1 kHz			0.47			0.47		
THD + N	Total harmonic distortion plus noise	$V_{O(PP)}$ = 20 V, A_{VD} = 10,	R_L = 2 kΩ, f = 10 kHz		0.01%			0.01%		
B_1	Unity-gain bandwidth	R_L = 2 kΩ,	C_L = 100 pF		6			6		MHz
	Gain-bandwidth product	R_L = 2 kΩ, f = 100 kHz	C_L = 100 pF,		5.9			5.9		MHz
B_{OM}	Maximum output-swing bandwidth	$V_{O(PP)}$ = 20 V, A_{VD} = 1,	R_L = 2 kΩ, C_L = 100 pF		668			668		kHz
ϕ_m	Phase margin at unity gain	R_L = 2 kΩ,	C_L = 100 pF		58°			58°		

TLE2142M electrical characteristics at specified free-air temperature, V_{CC} = 5 V (unless otherwise noted)

PARAMETER		TEST CONDITIONS	T_A†	TLE2142M			TLE2142AM			UNIT
				MIN	TYP	MAX	MIN	TYP	MAX	
V_{IO}	Input offset voltage	V_O = 2.5 V, R_S = 50 Ω, V_{IC} = 2.5 V	25°C		220	1900		200	1500	µV
			Full range			2600			2200	
α_{VIO}	Temperature coefficient of input offset voltage		Full range		1.7			1.7		µV/°C
I_{IO}	Input offset current		25°C		8	100		8	100	nA
			Full range			200			200	
I_{IB}	Input bias current		25°C		−0.8	−2		−0.8	−2	µA
			Full range			−2.3			−2.3	
V_{ICR}	Common-mode input voltage range	R_S = 50 Ω	25°C	0 to 3	−0.3 to 3.2		0 to 3	−0.3 to 3.2		V
			Full range	0 to 2.7	−0.3 to 2.9		0 to 2.7	−0.3 to 2.9		
V_{OH}	High-level output voltage	I_{OH} = −150 µA	25°C	3.9	4.1		3.9	4.1		V
		I_{OH} = −1.5 mA		3.8	4		3.8	4		
		I_{OH} = −15 mA		3.4	3.7		3.4	3.7		
		I_{OH} = 100 µA	Full range	3.75			3.75			
		I_{OH} = 1 mA		3.65			3.65			
		I_{OH} = 10 mA		3.45			3.45			
V_{OL}	Low-level output voltage	I_{OL} = 150 µA	25°C		75	125		75	125	mV
		I_{OL} = 1.5 mA			150	225		150	225	
		I_{OL} = 15 mA			1.2	1.4		1.2	1.4	V
		I_{OL} = 100 µA	Full range			200			200	mV
		I_{OL} = 1 mA				250			250	
		I_{OL} = 10 mA				1.25			1.25	V
A_{VD}	Large-signal differential voltage amplification	V_{IC} = ±2.5 V, R_L = 2 kΩ, V_O = 1 V to −1.5 V	25°C	50	220		50	220		V/mV
			Full range	5			5			
r_i	Input resistance		25°C		70			70		MΩ
c_i	Input capacitance		25°C		2.5			2.5		pF
z_o	Open-loop output impedance	f = 1 MHz	25°C		30			30		Ω
CMRR	Common-mode rejection ratio	V_{IC} = V_{ICR}min, R_S = 50 Ω	25°C	85	118		85	118		dB
			Full range	80			80			
k_{SVR}	Supply-voltage rejection ratio ($\Delta V_{CC\pm}$ /ΔV_{IO})	$V_{CC\pm}$ = ±2.5 V to ±15 V, R_S = 50 Ω	25°C	90	106		90	106		dB
			Full range	85			85			
I_{CC}	Supply current	V_O = 2.5 V, No load, V_{IC} = 2.5 V	25°C		6.6	8.8		6.6	8.8	mA
			Full range			9.2			9.2	

† Full range is − 55°C to 125°C.

TLE2142M operating characteristics, V_{CC} = 5 V, T_A = 25°C

PARAMETER		TEST CONDITIONS		TLE2142M			TLE2142AM			UNIT
				MIN	TYP	MAX	MIN	TYP	MAX	
SR+	Positive slew rate	A_{VD} = –1, C_L = 500 pF	R_L = 2 kΩ†,		45			45		V/µs
SR–	Negative slew rate				42			42		
t_s	Settling time	A_{VD} = –1, 2.5-V step	To 0.1%		0.16			0.16		µs
			To 0.01%		0.22			0.22		
V_n	Equivalent input noise voltage	R_S = 20 Ω,	f = 10 Hz		15			15		nV/√Hz
		R_S = 20 Ω,	f = 1 kHz		10.5			10.5		
$V_{N(PP)}$	Peak-to-peak equivalent input noise voltage	f = 0.1 Hz to 1 Hz			0.48			0.48		µV
		f = 0.1 Hz to 10 Hz			0.51			0.51		
I_n	Equivalent input noise current	f = 10 Hz			1.92			1.92		pA/√Hz
		f = 1 kHz			0.5			0.5		
THD + N	Total harmonic distortion plus noise	V_O = 1 V to 3 V, A_{VD} = 2,	R_L = 2 kΩ†, f = 10 kHz		0.0052%			0.0052%		
B_1	Unity-gain bandwidth	R_L = 2 kΩ†,	C_L = 100 pF		5.9			5.9		MHz
	Gain-bandwidth product	R_L = 2 kΩ†, f = 100 kHz	C_L = 100 pF		5.8			5.8		MHz
B_{OM}	Maximum output-swing bandwidth	$V_{O(PP)}$ = 2 V, A_{VD} = 1,	R_L = 2 kΩ†, C_L = 100 pF		660			660		kHz
ϕ_m	Phase margin	R_L = 2 kΩ†,	C_L = 100 pF		57°			57°		

† R_L terminates at 2.5 V.

TLE2142M electrical characteristics at specified free-air temperature, $V_{CC\pm}$ = ±15 V (unless otherwise noted)

PARAMETER		TEST CONDITIONS		T_A†	TLE2142M MIN	TLE2142M TYP	TLE2142M MAX	TLE2142AM MIN	TLE2142AM TYP	TLE2142AM MAX	UNIT
V_{IO}	Input offset voltage	V_{IC} = 0,	R_S = 50 Ω	25°C		290	1200		275	750	µV
				Full range			2000			1600	
α_{VIO}	Temperature coefficient of input offset voltage			Full range		1.7			1.7		µV/°C
I_{IO}	Input offset current			25°C		7	100		7	100	nA
				Full range			250			250	
I_{IB}	Input bias current			25°C		–0.7	–1.5		–0.7	–1.5	µA
				Full range			–1.8			–1.8	
V_{ICR}	Common-mode input voltage range	R_S = 50 Ω		25°C	–15 to 13	–15.3 to 13.2		–15 to 13	–15.3 to 13.2		V
				Full range	–15 to 12.7	–15.3 to 12.9		–15 to 12.7	–15.3 to 12.9		
V_{OM+}	Maximum positive peak output voltage swing	I_O = –150 µA		25°C	13.8	14.1		13.8	14.1		V
		I_O = –1.5 mA			13.7	14		13.7	14		
		I_O = –15 mA			13.3	13.7		13.3	13.7		
		I_O = –100 µA		Full range	13.7			13.7			
		I_O = –1 mA			13.6			13.6			
		I_O = –10 mA			13.3			13.3			
V_{OM-}	Maximum negative peak output voltage swing	I_O = 150 µA		25°C	–14.7	–14.9		–14.7	–14.9		V
		I_O = 1.5 mA			–14.5	–14.8		–14.5	–14.8		
		I_O = 15 mA			–13.4	–13.8		–13.4	–13.8		
		I_O = 100 µA		Full range	–14.6			–14.6			
		I_O = 1 mA			–14.5			–14.5			
		I_O = 10 mA			–13.4			–13.4			
A_{VD}	Large-signal differential voltage amplification	V_O = ±10 V,	R_L = 2 kΩ	25°C	100	450		100	450		V/mV
				Full range	20			20			
r_i	Input resistance			25°C		65			65		MΩ
c_i	Input capacitance			25°C		2.5			2.5		pF
z_o	Open-loop output impedance	f = 1 MHz		25°C		30			30		Ω
CMRR	Common-mode rejection ratio	V_{IC} = V_{ICR}min, R_S = 50 Ω		25°C	85	108		85	108		dB
				Full range	80			80			
k_{SVR}	Supply-voltage rejection ratio ($\Delta V_{CC\pm}/\Delta V_{IO}$)	$V_{CC\pm}$ = ±2.5 V to ±15 V, R_S = 50 Ω		25°C	90	106		90	106		dB
				Full range	85			85			
I_{OS}	Short-circuit output current	V_O = 0	V_{ID} = 1 V	25°C	–25	–50		–25	–50		mA
			V_{ID} = –1 V		20	31		20	31		
I_{CC}	Supply current	V_O = 0, V_{IC} = 2.5 V	No load,	25°C		6.9	9		6.9	9	mA
				Full range			9.4			9.4	

† Full range is –55°C to 125°C.

TLE2142M operating characteristics, $V_{CC\pm}$ = ±15 V, T_A = 25°C

PARAMETER		TEST CONDITIONS		TLE2142M			TLE2142AM			UNIT
				MIN	TYP	MAX	MIN	TYP	MAX	
SR+	Positive slew rate	R_L = 2 kΩ, C_L = 100 pF	A_{VD} = –1,	27	45		27	45		V/µs
SR–	Negative slew rate			27	42		27	42		
t_s	Settling time	A_{VD} = –1, 10-V step	To 0.1%		0.34			0.34		µs
			To 0.01%		0.4			0.4		
V_n	Equivalent input noise voltage	R_S = 20 Ω,	f = 10 Hz		15			15		nV/√Hz
		R_S = 20 Ω,	f = 1 kHz		10.5			10.5		
$V_{N(PP)}$	Peak-to-peak equivalent input noise voltage	f = 0.1 Hz to 1 Hz			0.48			0.48		µV
		f = 0.1 Hz to 10 Hz			0.51			0.51		
I_n	Equivalent input noise current	f = 10 Hz			1.89			1.89		pA/√Hz
		f = 1 kHz			0.47			0.47		
THD + N	Total harmonic distortion plus noise	$V_{O(PP)}$ = 20 V, A_{VD} = 10,	R_L = 2 kΩ, f = 10 kHz		0.01%			0.01%		
B_1	Unity-gain bandwidth	R_L = 2 kΩ,	C_L = 100 pF		6			6		MHz
	Gain-bandwidth product	R_L = 2 kΩ, f = 100 kHz	C_L = 100 pF,		5.9			5.9		MHz
B_{OM}	Maximum output-swing band-width	$V_{O(PP)}$ = 20 V, A_{VD} = 1,	R_L = 2 kΩ, C_L = 100 pF		668			668		kHz
ϕ_m	Phase margin at unity gain	R_L = 2 kΩ,	C_L = 100 pF		58°			58°		

TLE2144M electrical characteristics at specified free-air temperature, V_{CC} = 5 V (unless otherwise noted)

PARAMETER		TEST CONDITIONS	T_A†	TLE2144M			TLE2144AM			UNIT
				MIN	TYP	MAX	MIN	TYP	MAX	
V_{IO}	Input offset voltage	V_O = 2.5 V, R_S = 50 Ω, V_{IC} = 2.5 V	25°C		0.5	3.8		0.5	3	mV
			Full range			5.2			4.4	
α_{VIO}	Temperature coefficient of input offset voltage		Full range		1.7			1.7		µV/°C
I_{IO}	Input offset current		25°C		8	100		8	100	nA
			Full range			250			250	
I_{IB}	Input bias current		25°C		−0.8	−2		−0.8	−2	µA
			Full range			−2.3			−2.3	
V_{ICR}	Common-mode input voltage range	R_S = 50 Ω	25°C	0 to 3	−0.3 to 3.2		0 to 3	−0.3 to 3.2		V
			Full range	0 to 2.7	−0.3 to 2.9		0 to 2.7	−0.3 to 2.9		
V_{OH}	High-level output voltage	I_{OH} = −150 µA	25°C	3.9	4.1		3.9	4.1		V
		I_{OH} = −1.5 mA		3.8	4		3.8	4		
		I_{OH} = −15 mA		3.4	3.7		3.4	3.7		
		I_{OH} = 100 µA	Full range	3.75			3.75			
		I_{OH} = 1 mA		3.65			3.65			
		I_{OH} = 10 mA		3.45			3.45			
V_{OL}	Low-level output voltage	I_{OL} = 150 µA	25°C		75	125		75	125	mV
		I_{OL} = 1.5 µA			150	225		150	225	
		I_{OL} = 15 mA			1.2	1.6		1.2	1.6	V
		I_{OL} = 100 µA	Full range			200			200	mV
		I_{OL} = 1 mA				250			250	
		I_{OL} = 10 mA				1.45			1.45	V
A_{VD}	Large-signal differential voltage amplification	V_{IC} = ±2.5 V, R_L = 2 kΩ, V_O = 1 V to −1.5 V	25°C	50	95		50	95		V/mV
			Full range	5			5			
r_i	Input resistance		25°C		70			70		MΩ
c_i	Input capacitance		25°C		2.5			2.5		pF
z_o	Open-loop output impedance	f = 1 MHz	25°C		30			30		Ω
CMRR	Common-mode rejection ratio	V_{IC} = V_{ICR}min, R_S = 50 Ω	25°C	85	118		85	118		dB
			Full range	80			80			
k_{SVR}	Supply-voltage rejection ratio ($\Delta V_{CC\pm}/\Delta V_{IO}$)	$V_{CC\pm}$ = ±2.5 V to ±15 V, R_S = 50 Ω	25°C	90	106		90	106		dB
			Full range	85			85			
I_{CC}	Supply current	V_O = 2.5 V, No load, V_{IC} = 2.5 V	25°C		13.2	17.6		13.2	17.6	mA
			Full range			18.4			18.4	

† Full range is −55°C to 125°C.

TLE2144M operating characteristics, V_{CC} = 5 V, T_A = 25°C

PARAMETER		TEST CONDITIONS		TLE2144M			TLE2144AM			UNIT
				MIN	TYP	MAX	MIN	TYP	MAX	
SR+	Positive slew rate	A_{VD} = –1, C_L = 500 pF	R_L = 2 kΩ†,		45			45		V/µs
SR–	Negative slew rate				42			42		
t_s	Settling time	A_{VD} = –1, 2.5-V step	To 0.1%		0.16			0.16		µs
			To 0.01%		0.22			0.22		
V_n	Equivalent input noise voltage	R_S = 20 Ω,	f = 10 Hz		15			15		nV/√Hz
		R_S = 20 Ω,	f = 1 kHz		10.5			10.5		
$V_{N(PP)}$	Peak-to-peak equivalent input noise voltage	f = 0.1 Hz to 1 Hz			0.48			0.48		µV
		f = 0.1 Hz to 10 Hz			0.51			0.51		
I_n	Equivalent input noise current	f = 10 Hz			1.92			1.92		pA/√Hz
		f = 1 kHz			0.5			0.5		
THD + N	Total harmonic distortion plus noise	V_O = 1 V to 3 V, A_{VD} = 2,	R_L = 2 kΩ†, f = 10 kHz		0.0052%			0.0052%		
B_1	Unity-gain bandwidth	R_L = 2 kΩ†,	C_L = 100 pF		5.9			5.9		MHz
	Gain-bandwidth product	R_L = 2 kΩ†, f = 100 kHz	C_L = 100 pF,		5.8			5.8		MHz
B_{OM}	Maximum output-swing bandwidth	$V_{O(PP)}$ = 2 V, A_{VD} = 1	R_L = 2 kΩ†,		660			660		kHz
ϕ_m	Phase margin	R_L = 2 kΩ†,	C_L = 100 pF		57°			57°		

† R_L terminates at 2.5 V

TLE2144M electrical characteristics at specified free-air temperature, $V_{CC\pm}$ = ±15 V (unless otherwise noted)

PARAMETER		TEST CONDITIONS		T_A†	TLE2144M MIN	TLE2144M TYP	TLE2144M MAX	TLE2144AM MIN	TLE2144AM TYP	TLE2144AM MAX	UNIT
V_{IO}	Input offset voltage	V_{IC} = 0,	R_S = 50 Ω	25°C		0.6	2.4		0.5	1.5	mV
				Full range			4			3.2	
α_{VIO}	Temperature coefficient of input offset voltage			Full range		1.7			1.7		µV/°C
I_{IO}	Input offset current			25°C		7	100		7	100	nA
				Full range			250			250	
I_{IB}	Input bias current			25°C		–0.7	–1.5		–0.7	–1.5	µA
				Full range			–1.8			–1.8	
V_{ICR}	Common-mode input voltage range	R_S = 50 Ω		25°C	–15 to 13	–15.3 to 13.2		–15 to 13	–15.3 to 13.2		V
				Full range	–15 to 12.7	–15.3 to 12.9		–15 to 12.7	–15.3 to 12.9		
V_{OM+}	Maximum positive peak output voltage swing	I_O = –150 µA		25°C	13.8	14.1		13.8	14.1		V
		I_O = –1.5 mA			13.7	14		13.7	14		
		I_O = –15 mA			13.1	13.7		13.1	13.7		
		I_O = –100 µA		Full range	13.7			13.7			
		I_O = –1 mA			13.6			13.6			
		I_O = –10 mA			13.1			13.1			
V_{OM-}	Maximum negative peak output voltage swing	I_O = 150 µA		25°C	–14.7	–14.9		–14.7	–14.9		V
		I_O = 1.5 mA			–14.5	–14.8		–14.5	–14.8		
		I_O = 15 mA			–13.4	–13.8		–13.4	–13.8		
		I_O = 100 µA		Full range	–14.6			–14.6			
		I_O = 1 mA			–14.5			–14.5			
		I_O = 10 mA			–13.4			–13.4			
A_{VD}	Large-signal differential voltage amplification	V_O = ±10 V,	R_L = 2 kΩ	25°C	100	170		100	170		V/mV
				Full range	20			20			
r_i	Input resistance			25°C		65			65		MΩ
c_i	Input capacitance			25°C		2.5			2.5		pF
z_o	Open-loop output impedance	f = 1 MHz		25°C		30			30		Ω
CMRR	Common-mode rejection ratio	V_{IC} = V_{ICR}min,	R_S = 50 Ω	25°C	85	108		85	108		dB
				Full range	80			80			
k_{SVR}	Supply-voltage rejection ratio ($\Delta V_{CC\pm}/\Delta V_{IO}$)	$V_{CC\pm}$ = ±2.5 V to ±15 V, R_S = 50 Ω		25°C	90	106		90	106		dB
				Full range	85			85			
I_{OS}	Short-circuit output current	V_O = 0	V_{ID} = 1 V	25°C	–25	–50		–25	–50		mA
			V_{ID} = –1 V		20	31		20	31		
I_{CC}	Supply current	V_O = 0, V_{IC} = 2.5 V	No load,	25°C		13.8	18		13.8	18	mA
				Full range			18.8			18.8	

† Full range is –55°C to 125°C

TLE2144M operating characteristics, $V_{CC\pm}$ = ±15 V, T_A = 25°C

PARAMETER		TEST CONDITIONS		TLE2144M			TLE2144AM			UNIT
				MIN	TYP	MAX	MIN	TYP	MAX	
SR+	Positive slew rate	R_L = 2 kΩ, C_L = 100 pF	A_{VD} = –1,	27	45		27	45		V/µs
SR–	Negative slew rate			27	42		27	42		
t_s	Settling time	A_{VD} = –1, 10-V step	To 0.1%		0.34			0.34		µs
			To 0.01%		.4			.4		
V_n	Equivalent input noise voltage	R_S = 20 Ω,	f = 10 Hz		15			15		nV/√Hz
		R_S = 20 Ω,	f = 1 kHz		10.5			10.5		
$V_{N(PP)}$	Peak-to-peak equivalent input noise voltage	f = 0.1 Hz to 1 Hz			0.48			0.48		µV
		f = 0.1 Hz to 10 Hz			0.51			0.51		
I_n	Equivalent input noise current	f = 10 Hz			1.89			1.89		pA/√Hz
		f = 10 kHz			0.47			0.47		
THD + N	Total harmonic distortion plus noise	$V_{O(PP)}$ = 20 V, A_{VD} = 10,	R_L = 2 kΩ, f = 10 kHz		0.01%			0.01%		
B_1	Unity-gain bandwidth	R_L = 2 kΩ,	C_L = 100 pF		6			6		MHz
	Gain-bandwidth product	R_L = 2 kΩ, f = 100 kHz	C_L = 100 pF,		5.9			5.9		MHz
B_{OM}	Maximum output-swing bandwidth	$V_{O(PP)}$ = 20 V, A_{VD} = 1,	R_L = 2 kΩ, C_L = 100 pF		668			668		kHz
ϕ_m	Phase margin at unity gain	R_L = 2 kΩ,	C_L = 100 pF		58°			58°		

TLE2141Y electrical characteristics at specified free-air temperature, $V_{CC\pm}$ = ±15 V, T_A = 25°C (unless otherwise noted)

PARAMETER		TEST CONDITIONS		TLE2141Y MIN	TLE2141Y TYP	TLE2141Y MAX	UNIT
V_{IO}	Input offset voltage	V_{IC} = 0, V_O = 0	R_S = 50 Ω,		200	1000	µV
I_{IO}	Input offset current				7	100	nA
I_{IB}	Input bias current				–0.7	–1.5	µA
V_{ICR}	Common-mode input voltage range	R_S = 50 Ω		–15 to 13	–15.3 to 13.2		V
V_{OM+}	Maximum positive peak output voltage swing	I_O = –150 µA		13.8	14.1		V
		I_O = –1.5 mA		13.7	14		
		I_O = –15 mA		13.3	13.7		
V_{OM-}	Maximum negative peak output voltage swing	I_O = 150 µA		–14.7	–14.9		V
		I_O = 1.5 mA		–14.5	–14.8		
		I_O = 15 mA		–13.4	–13.8		
A_{VD}	Large-signal differential voltage amplification	V_O = ±10 V,	R_L = 2 kΩ	100	450		V/mV
r_i	Input resistance				65		MΩ
c_i	Input capacitance				2.5		pF
z_o	Open-loop output impedance	f = 1 MHz			30		Ω
CMRR	Common-mode rejection ratio	V_{IC} = V_{ICR}min,	R_S = 50 Ω	80	108		dB
k_{SVR}	Supply-voltage rejection ratio ($\Delta V_{CC\pm}/\Delta V_{IO}$)	$V_{CC\pm}$ = ±2.5 V to ±15 V, R_S = 50 Ω		85	106		dB
I_{OS}	Short-circuit output current	V_O = 0	V_{ID} = 1 V	–25	–50		mA
			V_{ID} = –1 V	20	31		
I_{CC}	Supply current	V_O = 0,	No load		3.5	4.5	mA

TLE2142Y electrical characteristics at specified free-air temperature, $V_{CC\pm}$ = ±15 V, T_A = 25°C

PARAMETER		TEST CONDITIONS		TLE2142Y MIN	TLE2142Y TYP	TLE2142Y MAX	UNIT
V_{IO}	Input offset voltage	V_{IC} = 0, V_O = 0	R_S = 50 Ω,		150	875	μV
I_{IO}	Input offset current				7	100	nA
I_{IB}	Input bias current				−0.7	−1.5	μA
V_{ICR}	Common-mode input voltage range	R_S = 50 Ω		−15 to 13	−15.3 to 13.2		V
V_{OM+}	Maximum positive peak output voltage swing	I_O = −150 μA		13.8	14.1		V
		I_O = −1.5 mA		13.7	14		
		I_O = −15 mA		13.3	13.7		
V_{OM-}	Maximum negative peak output voltage swing	I_O = 150 μA		−14.7	−14.9		V
		I_O = 1.5 mA		−14.5	−14.8		
		I_O = 15 mA		−13.4	−13.8		
A_{VD}	Large-signal differential voltage amplification	V_O = ±10 V,	R_L = 2 kΩ	100	450		V/mV
r_i	Input resistance				65		MΩ
c_i	Input capacitance				2.5		pF
z_o	Open-loop output impedance	f = 1 MHz			30		Ω
CMRR	Common-mode rejection ratio	V_{IC} = V_{ICR}min,	R_S = 50 Ω	80	108		dB
k_{SVR}	Supply-voltage rejection ratio ($\Delta V_{CC\pm}/\Delta V_{IO}$)	$V_{CC\pm}$ = ±2.5 V to ±15 V, R_S = 50 Ω		85	106		dB
I_{OS}	Short-circuit output current	V_O = 0	V_{ID} = 1 V	−25	−50		mA
			V_{ID} = −1 V	20	31		
I_{CC}	Supply current	V_O = 0,	No load		6.9	9	mA

TLE2144Y electrical characteristics at $V_{CC\pm}$ = ±15 V, T_A = 25°C (unless otherwise noted)

PARAMETER		TEST CONDITIONS		TLE2144Y MIN	TLE2144Y TYP	TLE2144Y MAX	UNIT
V_{IO}	Input offset voltage	V_{IC} = 0, V_O = 0	R_S = 50 Ω,		0.3	1.8	mV
I_{IO}	Input offset current				7	100	nA
I_{IB}	Input bias current				–0.7	–1.5	µA
V_{ICR}	Common-mode input voltage range	R_S = 50 Ω		–15 to 13	–15.3 to 13.2		V
V_{OM+}	Maximum positive peak output voltage swing	I_O = –150 µA		13.8	14.1		V
		I_O = –1.5 mA		13.7	14		
		I_O = –15 mA		13.3	13.7		
V_{OM-}	Maximum negative peak output voltage swing	I_O = 150 µA		–14.7	–14.9		V
		I_O = 1.5 mA		–14.5	–14.8		
		I_O = 15 mA		–13.4	–13.8		
A_{VD}	Large-signal differential voltage amplification	V_O = ±10 V,	R_L = 2 kΩ	100	450		V/mV
r_i	Input resistance				65		MΩ
c_i	Input capacitance				2.5		pF
z_o	Open-loop output impedance	f = 1 MHz			30		Ω
CMRR	Common-mode rejection ratio	V_{IC} = V_{ICR}min,	R_S = 50 Ω	80	108		dB
k_{SVR}	Supply-voltage rejection ratio ($\Delta V_{CC\pm}/\Delta V_{IO}$)	$V_{CC\pm}$ = ±2.5 V to ±15 V,	R_S = 50 Ω	85	106		dB
I_{OS}	Short-circuit output current	V_O = 0	V_{ID} = 1 V	–25	–50		mA
			V_{ID} = –1 V	20	31		
I_{CC}	Supply current	V_O = 0,	No load		13.8	18	mA

TYPICAL CHARACTERISTICS

Table of Graphs

				FIGURE
V_{IO}	Input offset voltage		Distribution	1, 2, 3
I_{IO}	Input offset current		vs Free-air temperature	4
I_{IB}	Input bias current		vs Common-mode input voltage vs Free-air temperature	5 6
V_{OM+}	Maximum positive peak output voltage		vs Supply voltage vs Free-air temperature vs Output current vs Settling time	7 8 9 11
V_{OM-}	Maximum negative peak output voltage		vs Supply voltage vs Free-air temperature vs Output current vs Settling time	7 8 10 11
$V_{O(PP)}$	Maximum peak-to-peak output voltage		vs Frequency	12
V_{OH}	High-level output voltage		vs Output current	13
V_{OL}	Low-level output voltage		vs Output current	14
A_{VD}	Large-signal differential voltage amplification		vs Frequency vs Free-air temperature	15 16
z_o	Closed-loop output impedance		vs Frequency	17
I_{OS}	Short-circuit output current		vs Free-air temperature	18
CMRR	Common-mode rejection ratio		vs Frequency vs Free-air temperature	19 20
k_{SVR}	Supply-voltage rejection ratio		vs Frequency vs Free-air temperature	21 22
I_{CC}	Supply current		vs Supply voltage vs Free-air temperature	23 24
V_n	Equivalent input noise voltage		vs Frequency	25
V_n	Input noise voltage		Over a 10-second period	26
I_n	Noise current		vs Frequency	27
THD + N	Total harmonic distortion plus noise		vs Frequency	28
SR	Slew rate		vs Free-air temperature vs Load capacitance	29 30
	Pulse response	Noninverting large signal	vs Time	31
		Inverting large signal	vs Time	32
		Small signal	vs Time	33
B_1	Unity-gain bandwidth		vs Load capacitance	34
	Gain margin		vs Load capacitance	35
ϕ_m	Phase margin		vs Load capacitance	36
	Phase shift		vs Frequency	15

TYPICAL CHARACTERISTICS

TLE2141
DISTRIBUTION OF
INPUT OFFSET VOLTAGE

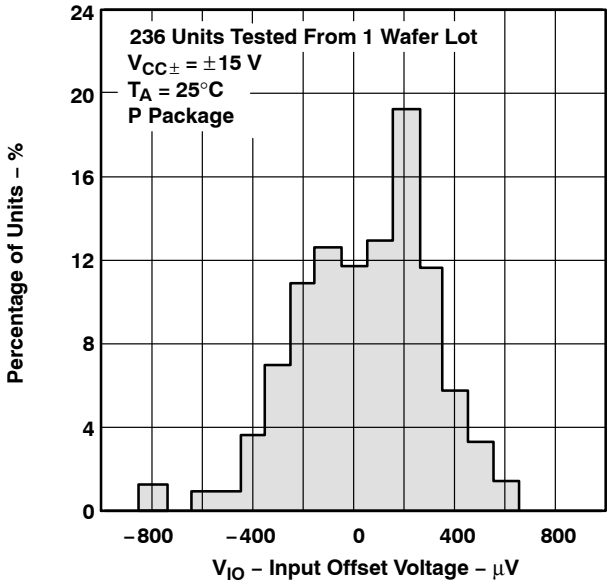

Figure 1

TLE2142
DISTRIBUTION OF
INPUT OFFSET VOLTAGE

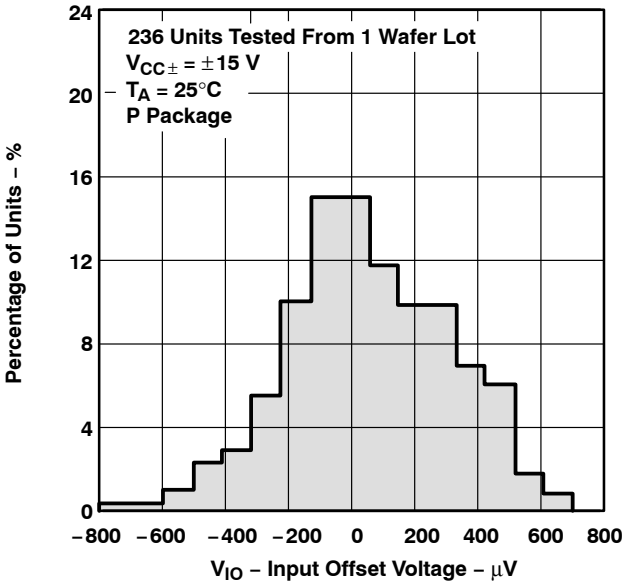

Figure 2

TLE2144
DISTRIBUTION OF
INPUT OFFSET VOLTAGE

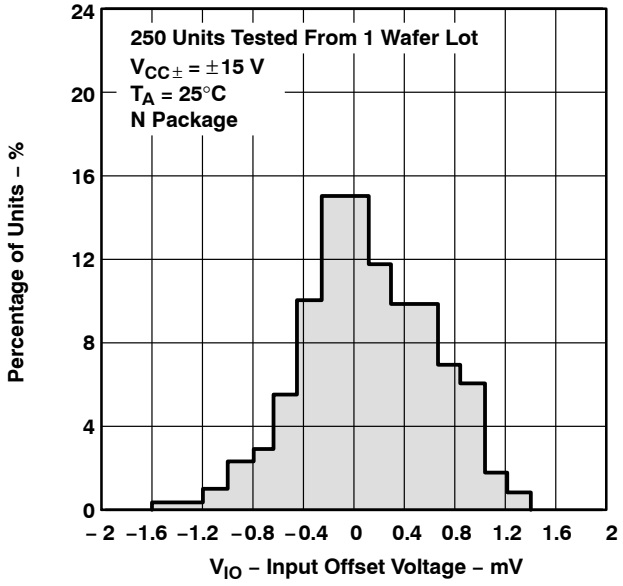

Figure 3

INPUT OFFSET CURRENT†
vs
FREE-AIR TEMPERATURE

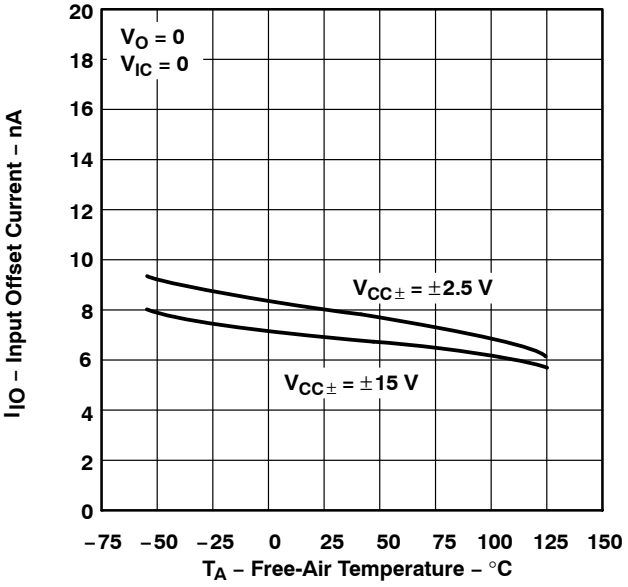

Figure 4

† Data at high and low temperatures are applicable only within the rated operating free-air temperature ranges of the various devices.

TYPICAL CHARACTERISTICS

INPUT BIAS CURRENT† vs COMMON-MODE INPUT VOLTAGE

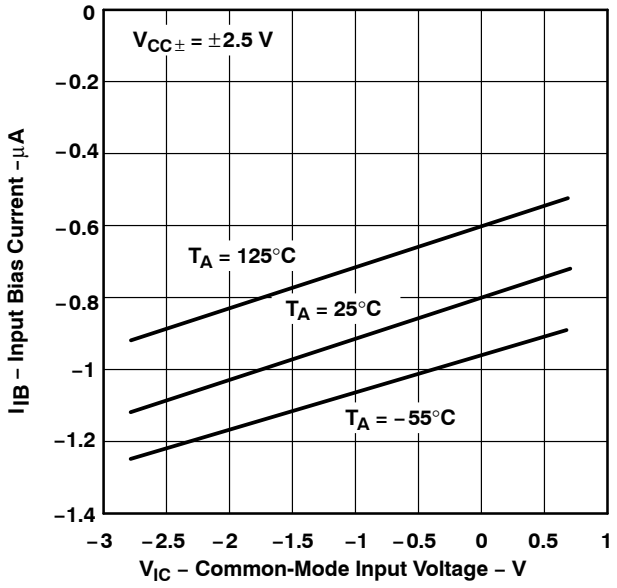

Figure 5

INPUT BIAS CURRENT† vs FREE-AIR TEMPERATURE

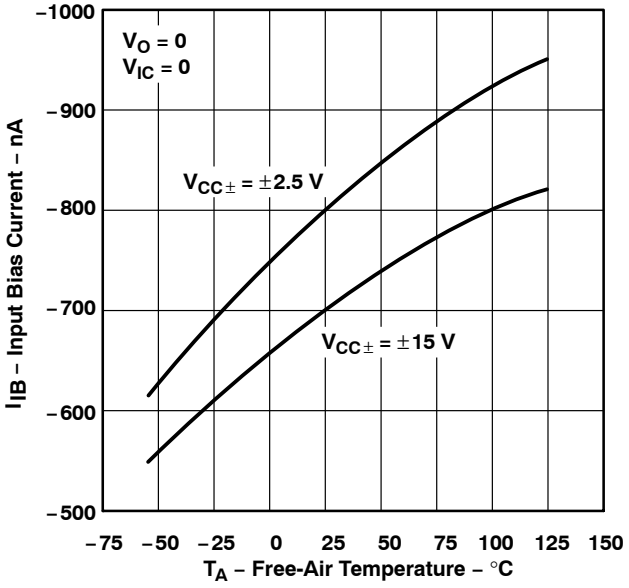

Figure 6

MAXIMUM PEAK OUTPUT VOLTAGE vs SUPPLY VOLTAGE

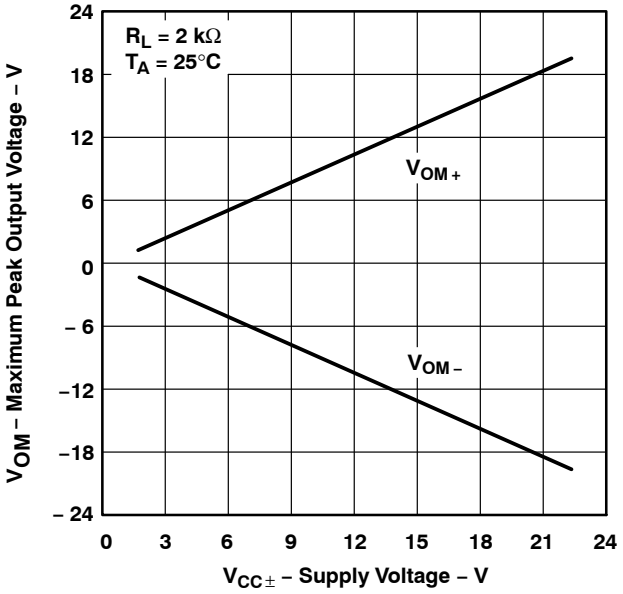

Figure 7

MAXIMUM PEAK OUTPUT VOLTAGE vs FREE-AIR TEMPERATURE

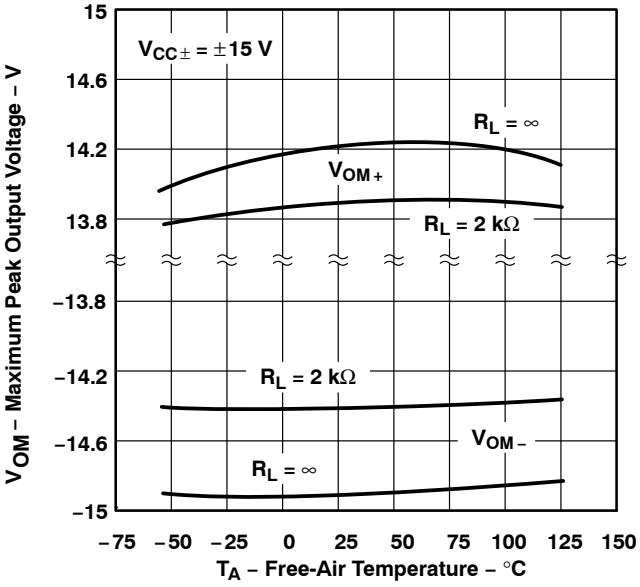

Figure 8

† Data at high and low temperatures are applicable only within the rated operating free-air temperature ranges of the various devices.

TYPICAL CHARACTERISTICS

MAXIMUM POSITIVE PEAK OUTPUT VOLTAGE† vs OUTPUT CURRENT

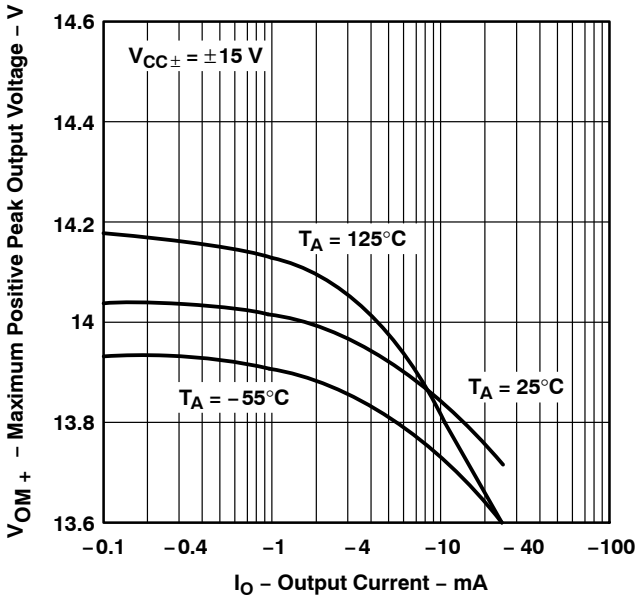

Figure 9

MAXIMUM NEGATIVE PEAK OUTPUT VOLTAGE† vs OUTPUT CURRENT

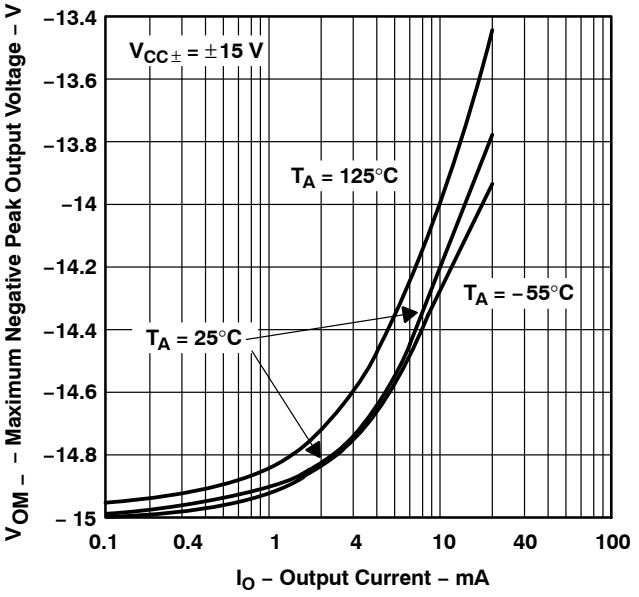

Figure 10

MAXIMUM PEAK OUTPUT VOLTAGE vs SETTLING TIME

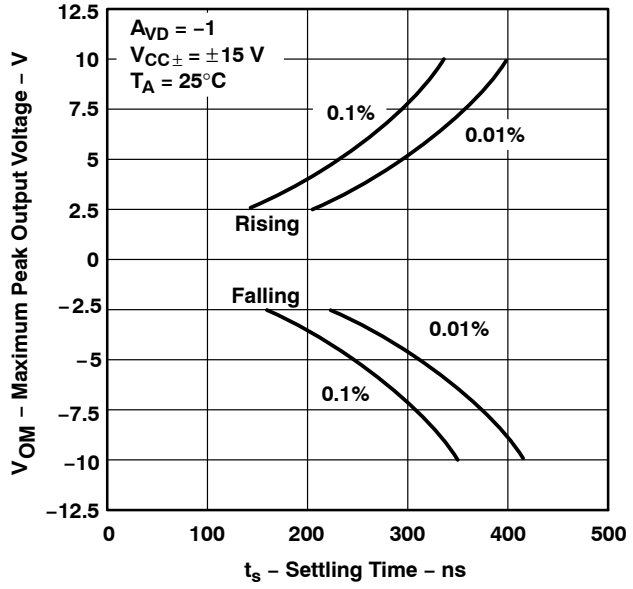

Figure 11

MAXIMUM PEAK-TO-PEAK OUTPUT VOLTAGE† vs FREQUENCY

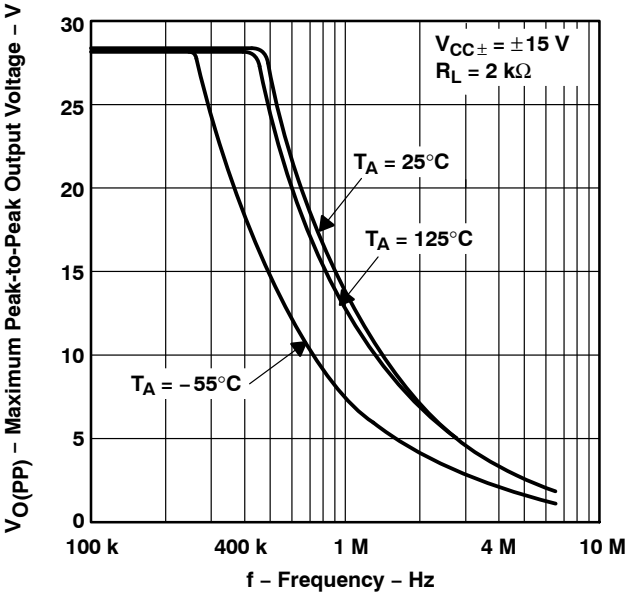

Figure 12

† Data at high and low temperatures are applicable only within the rated operating free-air temperature ranges of the various devices.

TYPICAL CHARACTERISTICS

HIGH-LEVEL OUTPUT VOLTAGE† vs OUTPUT CURRENT

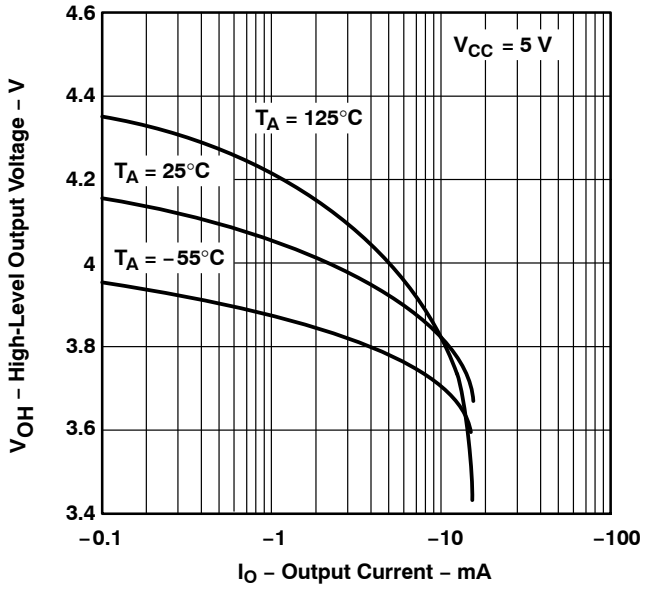

Figure 13

LOW-LEVEL OUTPUT VOLTAGE† vs OUTPUT CURRENT

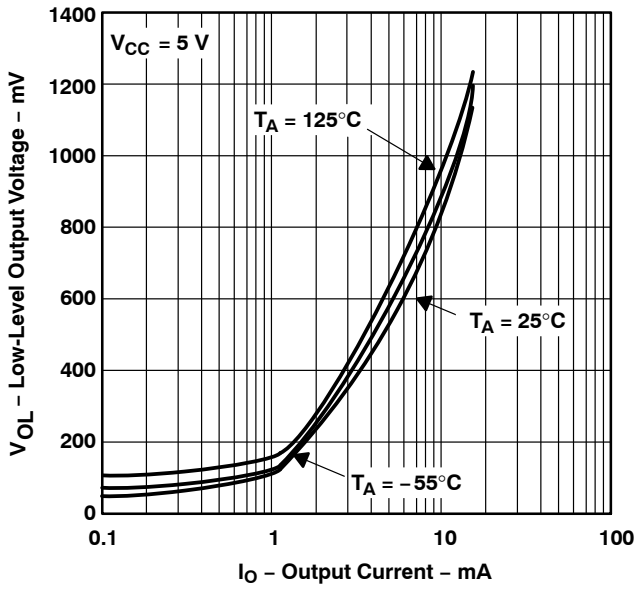

Figure 14

LARGE-SIGNAL DIFFERENTIAL VOLTAGE AMPLIFICATION AND PHASE SHIFT vs FREQUENCY

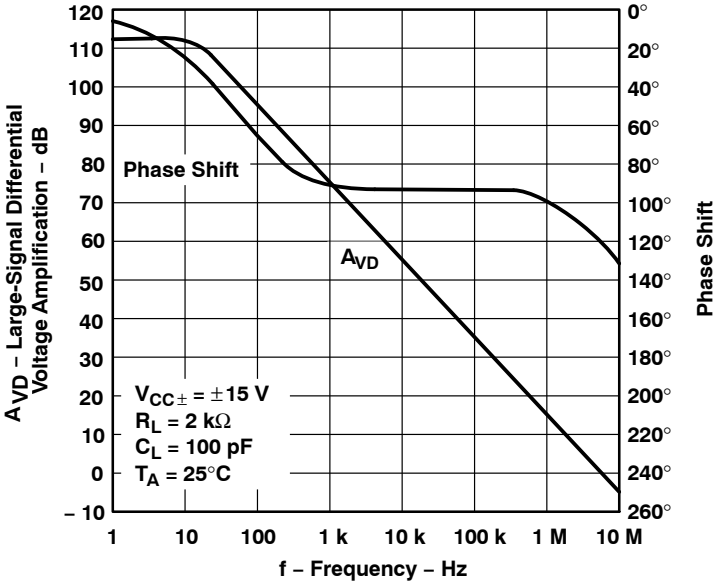

Figure 15

† Data at high and low temperatures are applicable only within the rated operating free-air temperature ranges of the various devices.

TYPICAL CHARACTERISTICS

LARGE-SIGNAL DIFFERENTIAL VOLTAGE AMPLIFICATION† vs FREE-AIR TEMPERATURE

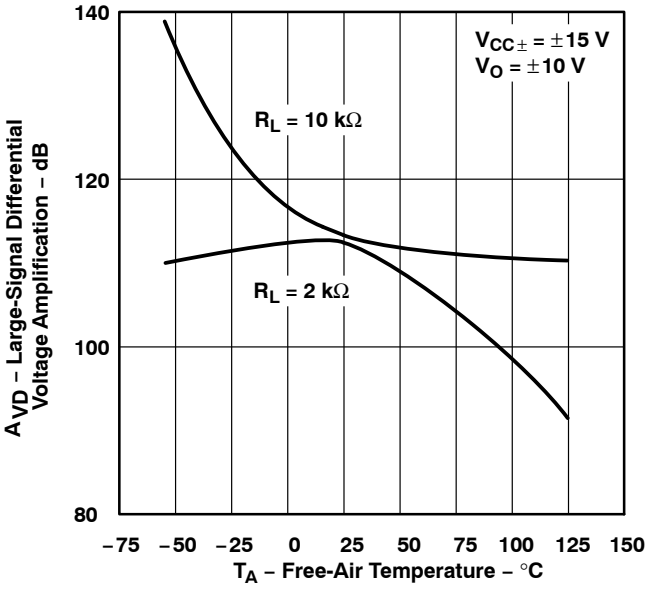

Figure 16

CLOSED-LOOP OUTPUT IMPEDANCE vs FREQUENCY

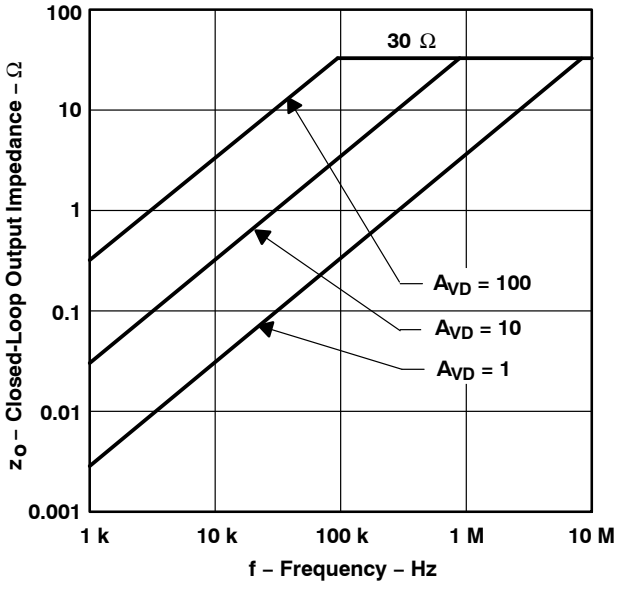

Figure 17

SHORT-CIRCUIT OUTPUT CURRENT† vs FREE-AIR TEMPERATURE

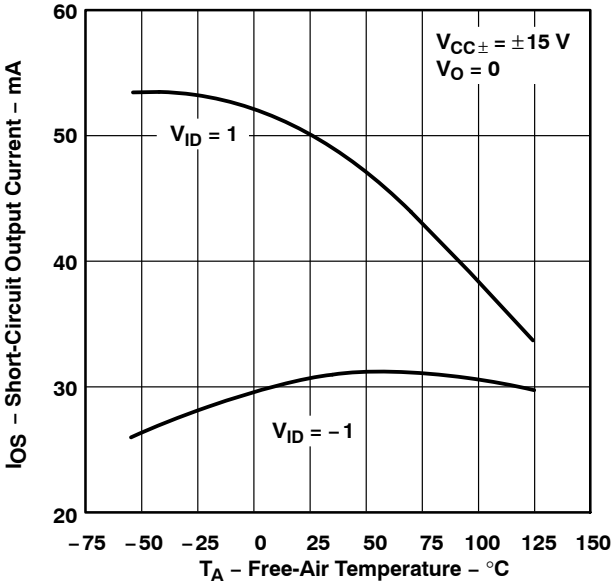

Figure 18

† Data at high and low temperatures are applicable only within the rated operating free-air temperature ranges of the various devices.

TYPICAL CHARACTERISTICS

COMMON-MODE REJECTION RATIO vs FREQUENCY

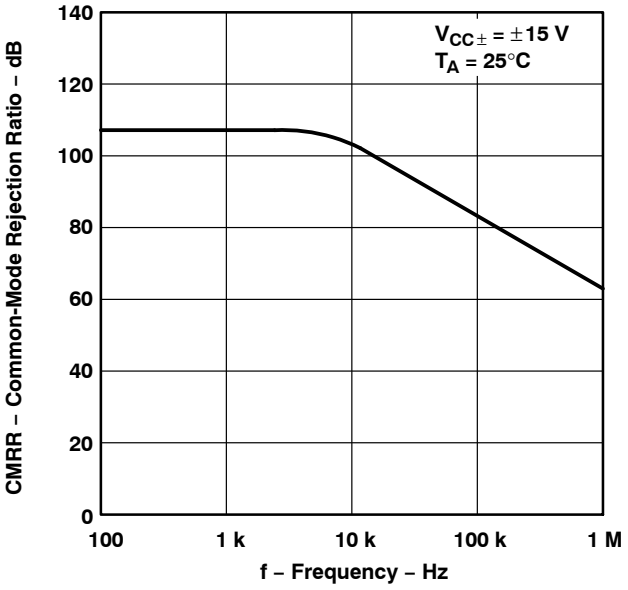

Figure 19

COMMON-MODE REJECTION RATIO† vs FREE-AIR TEMPERATURE

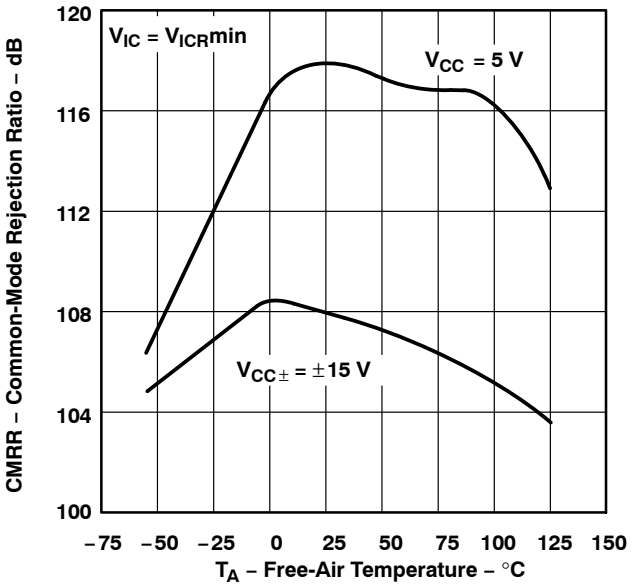

Figure 20

SUPPLY-VOLTAGE REJECTION RATIO vs FREQUENCY

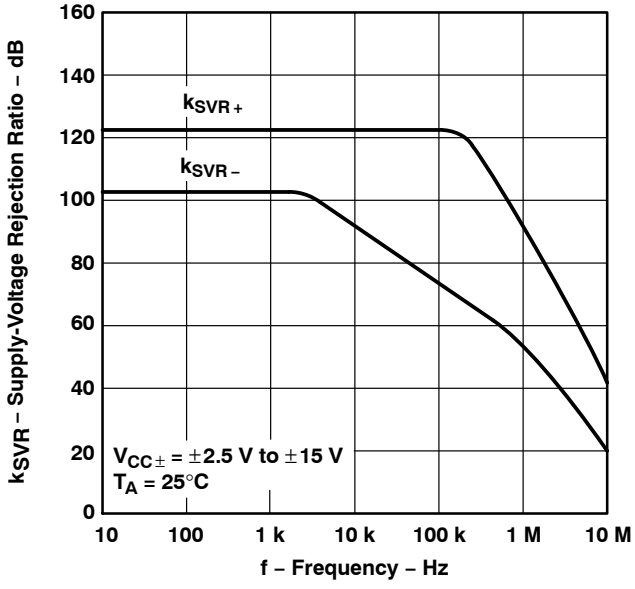

Figure 21

SUPPLY-VOLTAGE REJECTION RATIO† vs FREE-AIR TEMPERATURE

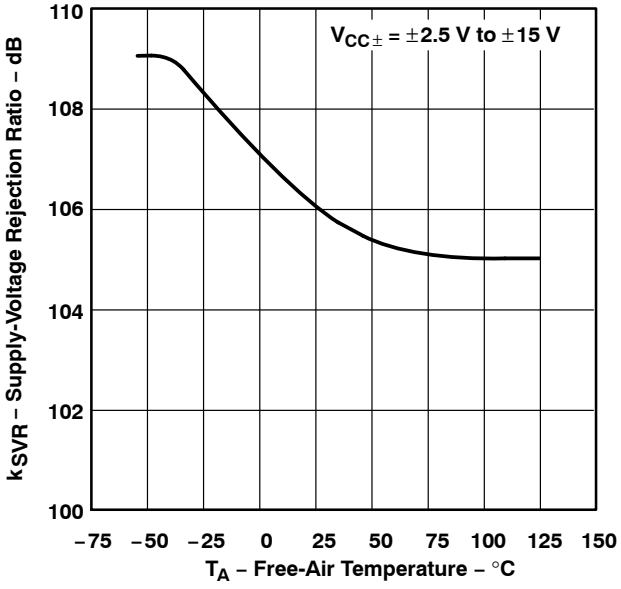

Figure 22

† Data at high and low temperatures are applicable only within the rated operating free-air temperature ranges of the various devices.

TYPICAL CHARACTERISTICS

SUPPLY CURRENT† vs SUPPLY VOLTAGE

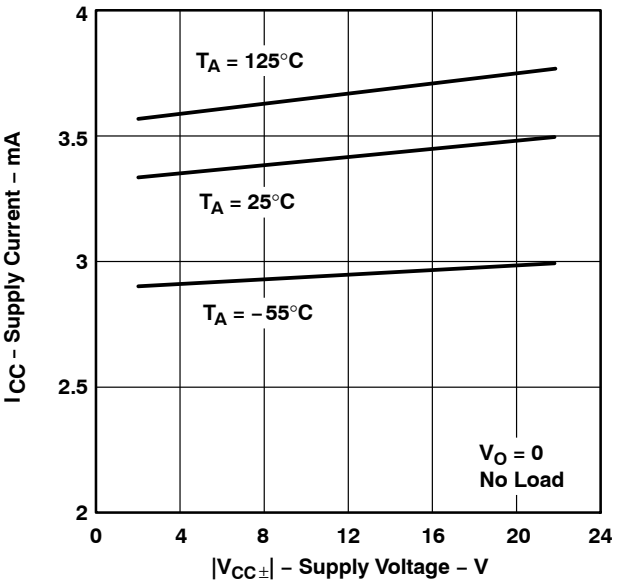

Figure 23

SUPPLY CURRENT† vs FREE-AIR TEMPERATURE

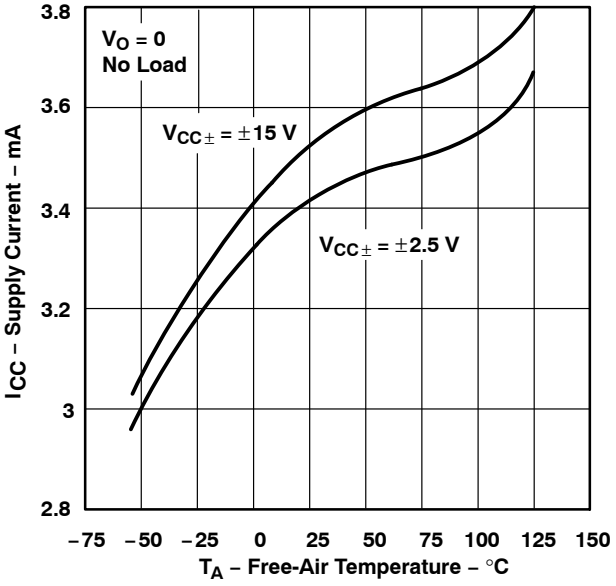

Figure 24

EQUIVALENT INPUT NOISE VOLTAGE† vs FREQUENCY

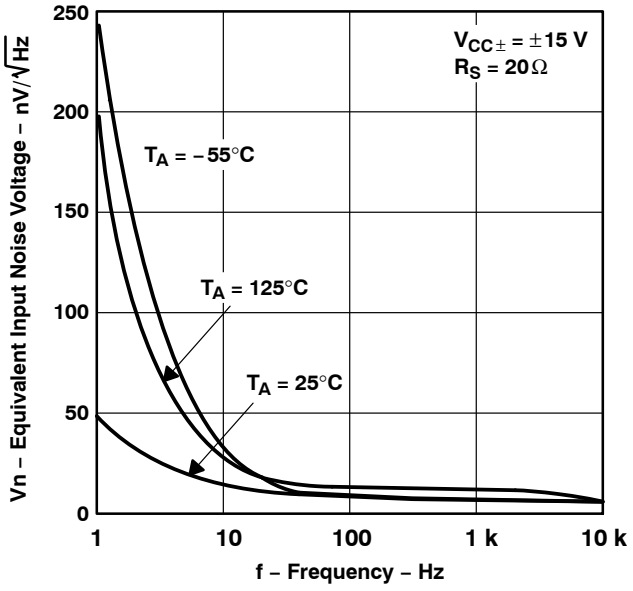

Figure 25

INPUT NOISE VOLTAGE OVER A 10-SECOND PERIOD

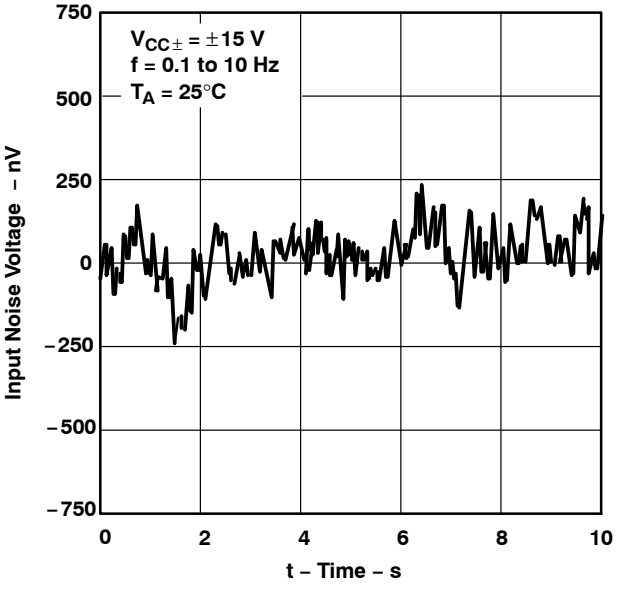

Figure 26

† Data at high and low temperatures are applicable only within the rated operating free-air temperature ranges of the various devices.

TYPICAL CHARACTERISTICS

NOISE CURRENT† vs FREQUENCY

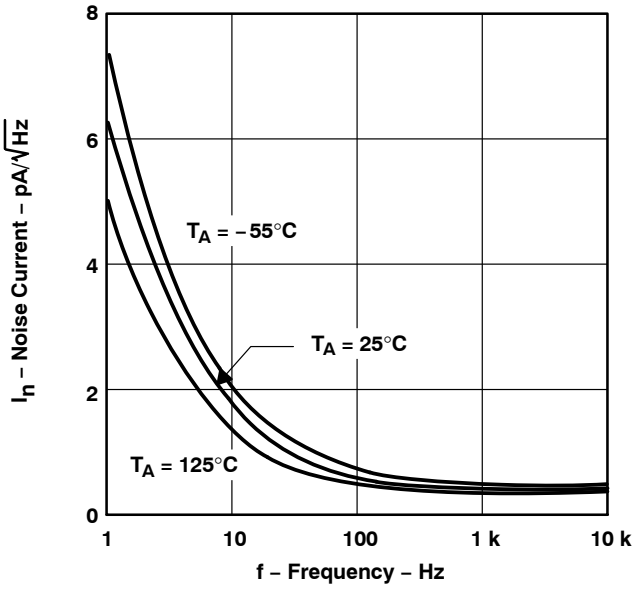

Figure 27

TOTAL HARMONIC DISTORTION PLUS NOISE vs FREQUENCY

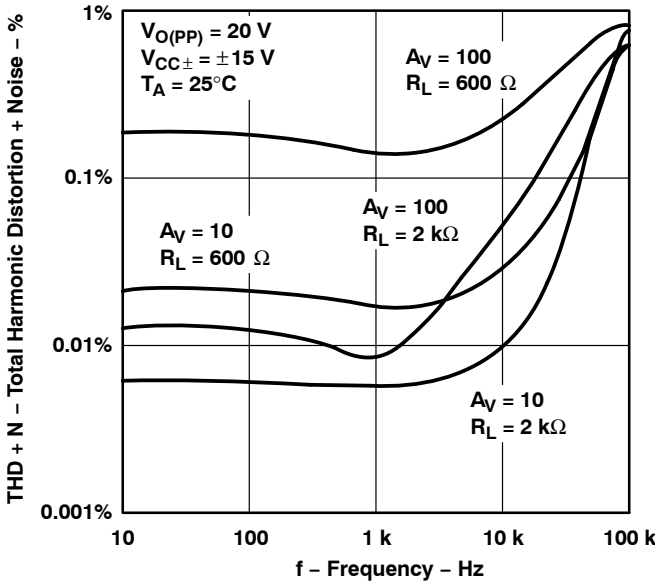

Figure 28

SLEW RATE† vs FREE-AIR TEMPERATURE

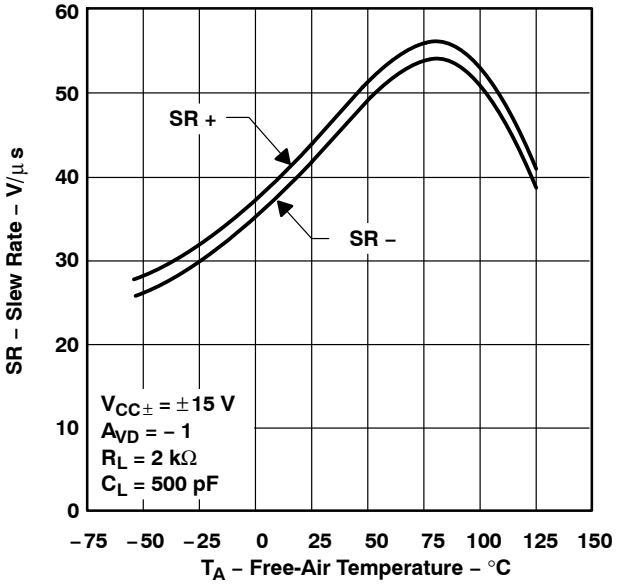

Figure 29

SLEW RATE vs LOAD CAPACITANCE

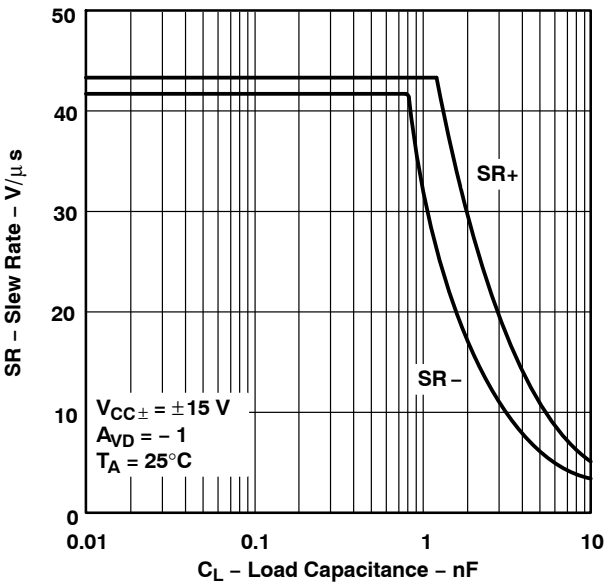

Figure 30

† Data at high and low temperatures are applicable only within the rated operating free-air temperature ranges of the various devices.

TYPICAL CHARACTERISTICS

NONINVERTING LARGE-SIGNAL PULSE RESPONSE†

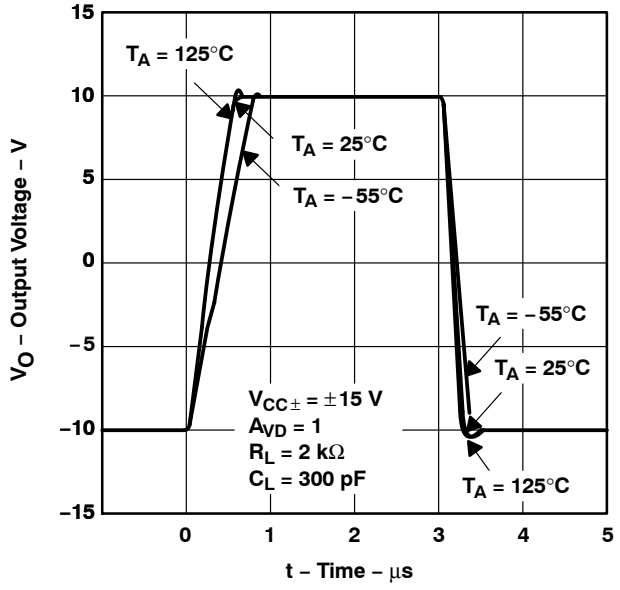

Figure 31

INVERTING LARGE-SIGNAL PULSE RESPONSE†

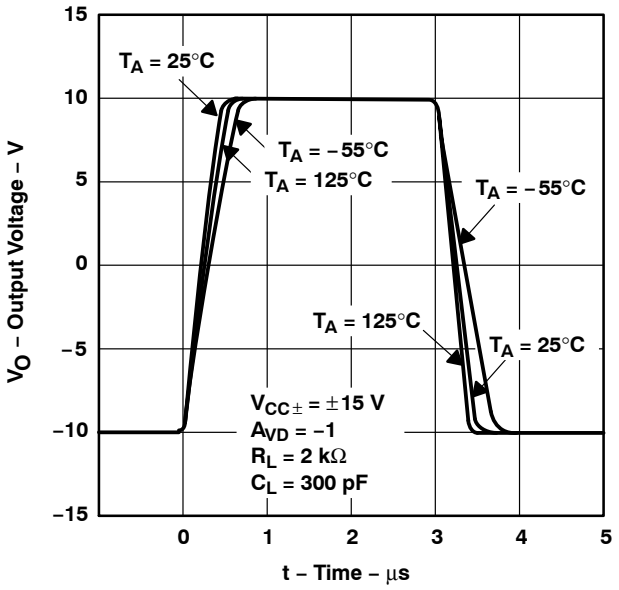

Figure 32

SMALL-SIGNAL PULSE RESPONSE

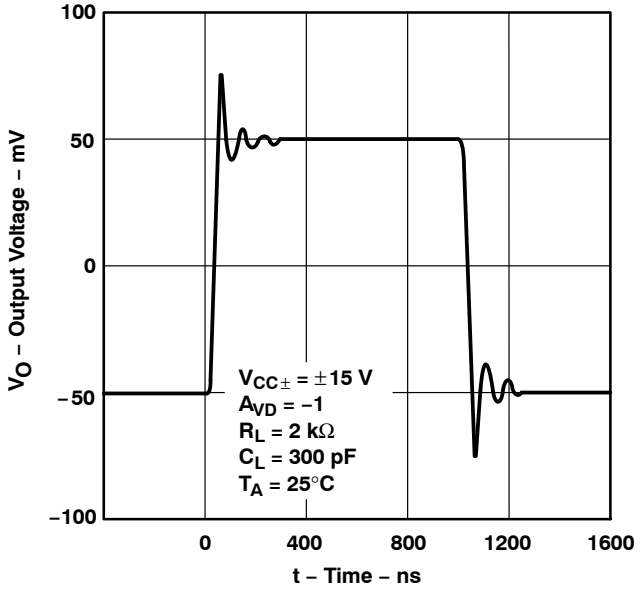

Figure 33

UNITY-GAIN BANDWIDTH† vs LOAD CAPACITANCE

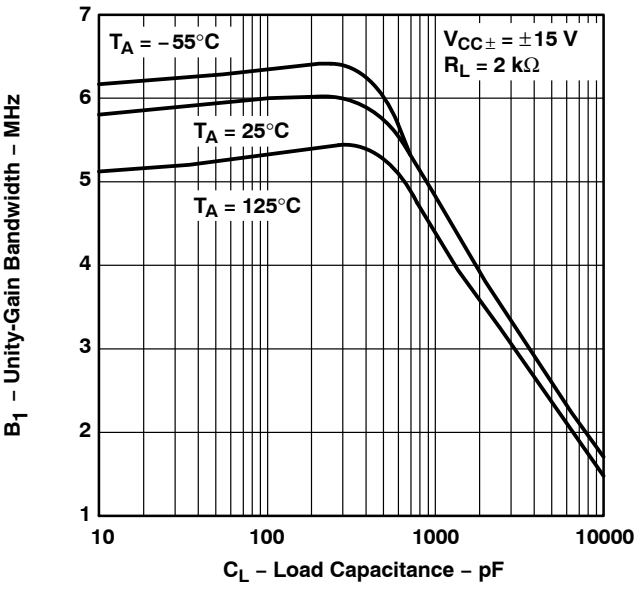

Figure 34

† Data at high and low temperatures are applicable only within the rated operating free-air temperature ranges of the various devices.

TYPICAL CHARACTERISTICS

GAIN MARGIN† vs LOAD CAPACITANCE

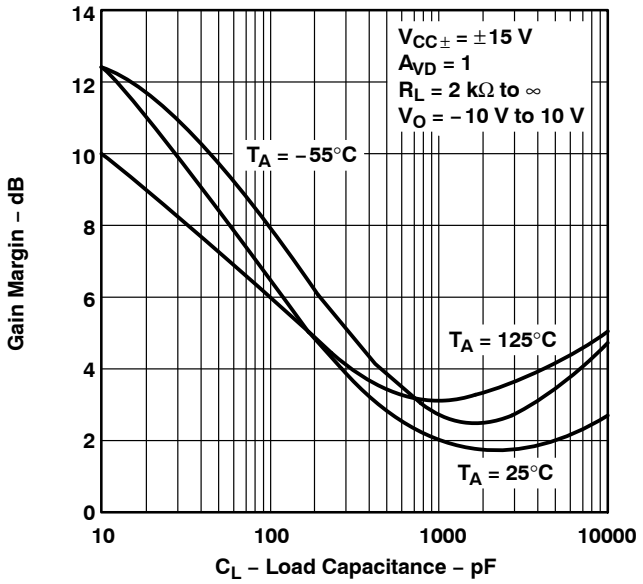

Figure 35

PHASE MARGIN† vs LOAD CAPACITANCE

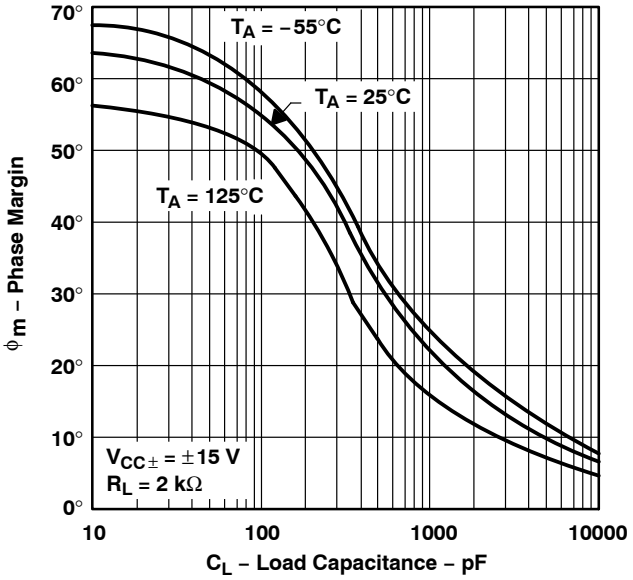

Figure 36

† Data at high and low temperatures are applicable only within the rated operating free-air temperature ranges of the various devices.

APPLICATION INFORMATION

input offset voltage nulling

The TLE2141 series offers external null pins that can be used to further reduce the input offset voltage. If this feature is desired, connect the circuit of Figure 37 as shown. If external nulling is not needed, the null pins may be left unconnected.

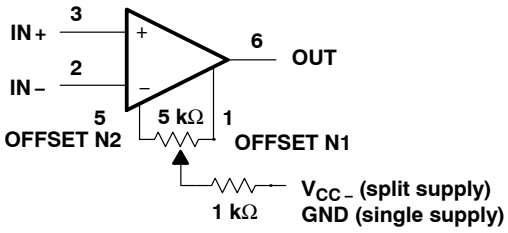

Figure 37. Input Offset Voltage Null Circuit

PACKAGING INFORMATION

Orderable Device	Status (1)	Package Type	Package Drawing	Pins	Package Qty	Eco Plan (2)	Lead finish/ Ball material (6)	MSL Peak Temp (3)	Op Temp (°C)	Device Marking (4/5)	Samples
5962-9321603Q2A	ACTIVE	LCCC	FK	20	1	Non-RoHS & Green	SNPB	N / A for Pkg Type	-55 to 125	5962-9321603Q2A TLE2142MFKB	Samples
5962-9321603QHA	ACTIVE	CFP	U	10	1	Non-RoHS & Green	SNPB	N / A for Pkg Type	-55 to 125	9321603QHA TLE2142M	Samples
5962-9321603QPA	ACTIVE	CDIP	JG	8	1	Non-RoHS & Green	SNPB	N / A for Pkg Type	-55 to 125	9321603QPA TLE2142M	Samples
5962-9321604Q2A	ACTIVE	LCCC	FK	20	1	Non-RoHS & Green	SNPB	N / A for Pkg Type	-55 to 125	5962-9321604Q2A TLE2142 AMFKB	Samples
5962-9321604QHA	ACTIVE	CFP	U	10	1	Non-RoHS & Green	SNPB	N / A for Pkg Type	-55 to 125	9321604QHA TLE2142AM	Samples
5962-9321604QPA	ACTIVE	CDIP	JG	8	1	Non-RoHS & Green	SNPB	N / A for Pkg Type	-55 to 125	9321604QPA TLE2142AM	Samples
5962-9321605Q2A	ACTIVE	LCCC	FK	20	1	Non-RoHS & Green	SNPB	N / A for Pkg Type	-55 to 125	5962-9321605Q2A TLE2144MFKB	Samples
5962-9321605QCA	ACTIVE	CDIP	J	14	1	Non-RoHS & Green	SNPB	N / A for Pkg Type	-55 to 125	5962-9321605QC A TLE2144MJB	Samples
5962-9321606Q2A	ACTIVE	LCCC	FK	20	1	Non-RoHS & Green	SNPB	N / A for Pkg Type	-55 to 125	5962-9321606Q2A TLE2144 AMFKB	Samples
5962-9321606QCA	ACTIVE	CDIP	J	14	1	Non-RoHS & Green	SNPB	N / A for Pkg Type	-55 to 125	5962-9321606QC A TLE2144AMJB	Samples
TLE2141ACD	ACTIVE	SOIC	D	8	75	RoHS & Green	NIPDAU	Level-1-260C-UNLIM		2141AC	Samples
TLE2141ACP	ACTIVE	PDIP	P	8	50	RoHS & Green	NIPDAU	N / A for Pkg Type		TLE2141AC	Samples
TLE2141AID	ACTIVE	SOIC	D	8	75	RoHS & Green	NIPDAU	Level-1-260C-UNLIM		2141AI	Samples
TLE2141AIDR	ACTIVE	SOIC	D	8	2500	RoHS & Green	NIPDAU	Level-1-260C-UNLIM		2141AI	Samples

Orderable Device	Status (1)	Package Type	Package Drawing	Pins	Package Qty	Eco Plan (2)	Lead finish/ Ball material (6)	MSL Peak Temp (3)	Op Temp (°C)	Device Marking (4/5)	Samples
TLE2141AIP	ACTIVE	PDIP	P	8	50	RoHS & Green	NIPDAU	N / A for Pkg Type	0 to 70	TLE2141AI	Samples
TLE2141CD	ACTIVE	SOIC	D	8	75	RoHS & Green	NIPDAU	Level-1-260C-UNLIM		2141C	Samples
TLE2141CDR	ACTIVE	SOIC	D	8	2500	RoHS & Green	NIPDAU	Level-1-260C-UNLIM		2141C	Samples
TLE2141CDRG4	ACTIVE	SOIC	D	8	2500	RoHS & Green	NIPDAU	Level-1-260C-UNLIM		2141C	Samples
TLE2141CP	ACTIVE	PDIP	P	8	50	RoHS & Green	NIPDAU	N / A for Pkg Type		TLE2141CP	Samples
TLE2141CPE4	ACTIVE	PDIP	P	8	50	RoHS & Green	NIPDAU	N / A for Pkg Type		TLE2141CP	Samples
TLE2141ID	ACTIVE	SOIC	D	8	75	RoHS & Green	NIPDAU	Level-1-260C-UNLIM		2141I	Samples
TLE2141IDR	ACTIVE	SOIC	D	8	2500	RoHS & Green	NIPDAU	Level-1-260C-UNLIM		2141I	Samples
TLE2141IP	ACTIVE	PDIP	P	8	50	RoHS & Green	NIPDAU	N / A for Pkg Type		TLE2141IP	Samples
TLE2141IPE4	ACTIVE	PDIP	P	8	50	RoHS & Green	NIPDAU	N / A for Pkg Type		TLE2141IP	Samples
TLE2141MD	ACTIVE	SOIC	D	8	75	RoHS & Green	NIPDAU	Level-1-260C-UNLIM	-55 to 125	2141M	Samples
TLE2141MDR	ACTIVE	SOIC	D	8	2500	RoHS & Green	NIPDAU	Level-1-260C-UNLIM	-55 to 125	2141M	Samples
TLE2142ACD	ACTIVE	SOIC	D	8	75	RoHS & Green	NIPDAU	Level-1-260C-UNLIM	0 to 70	2142AC	Samples
TLE2142ACDG4	ACTIVE	SOIC	D	8	75	RoHS & Green	NIPDAU	Level-1-260C-UNLIM	0 to 70	2142AC	Samples
TLE2142ACDR	ACTIVE	SOIC	D	8	2500	RoHS & Green	NIPDAU	Level-1-260C-UNLIM		2142AC	Samples
TLE2142AID	ACTIVE	SOIC	D	8	75	RoHS & Green	NIPDAU	Level-1-260C-UNLIM	-40 to 85	2142AI	Samples
TLE2142AIDR	ACTIVE	SOIC	D	8	2500	RoHS & Green	NIPDAU	Level-1-260C-UNLIM		2142AI	Samples
TLE2142AMD	ACTIVE	SOIC	D	8	75	RoHS & Green	NIPDAU	Level-1-260C-UNLIM	-55 to 125	E2142A	Samples
TLE2142AMDG4	ACTIVE	SOIC	D	8	75	RoHS & Green	NIPDAU	Level-1-260C-UNLIM		E2142A	Samples
TLE2142AMDR	ACTIVE	SOIC	D	8	2500	RoHS & Green	NIPDAU	Level-1-260C-UNLIM	-55 to 125	E2142A	Samples
TLE2142AMDRG4	ACTIVE	SOIC	D	8	2500	RoHS & Green	NIPDAU	Level-1-260C-UNLIM		E2142A	Samples

Orderable Device	Status (1)	Package Type	Package Drawing	Pins	Package Qty	Eco Plan (2)	Lead finish/ Ball material (6)	MSL Peak Temp (3)	Op Temp (°C)	Device Marking (4/5)	Samples
TLE2142AMFKB	ACTIVE	LCCC	FK	20	1	Non-RoHS & Green	SNPB	N / A for Pkg Type	-55 to 125	5962-9321604Q2A TLE2142 AMFKB	Samples
TLE2142AMJG	ACTIVE	CDIP	JG	8	1	Non-RoHS & Green	SNPB	N / A for Pkg Type		TLE2142AMJG	Samples
TLE2142AMJGB	ACTIVE	CDIP	JG	8	1	Non-RoHS & Green	SNPB	N / A for Pkg Type	-55 to 125	9321604QPA TLE2142AM	Samples
TLE2142AMUB	ACTIVE	CFP	U	10	1	Non-RoHS & Green	SNPB	N / A for Pkg Type	-55 to 125	9321604QHA TLE2142AM	Samples
TLE2142CD	ACTIVE	SOIC	D	8	75	RoHS & Green	NIPDAU	Level-1-260C-UNLIM	0 to 70	2142C	Samples
TLE2142CDG4	ACTIVE	SOIC	D	8	75	RoHS & Green	NIPDAU	Level-1-260C-UNLIM	0 to 70	2142C	Samples
TLE2142CDR	ACTIVE	SOIC	D	8	2500	RoHS & Green	NIPDAU	Level-1-260C-UNLIM	0 to 70	2142C	Samples
TLE2142CDRG4	ACTIVE	SOIC	D	8	2500	RoHS & Green	NIPDAU	Level-1-260C-UNLIM	0 to 70	2142C	Samples
TLE2142CP	ACTIVE	PDIP	P	8	50	RoHS & Green	NIPDAU	N / A for Pkg Type	0 to 70	TLE2142CP	Samples
TLE2142CPWR	ACTIVE	TSSOP	PW	16	2000	RoHS & Green	NIPDAU	Level-1-260C-UNLIM	0 to 70	Q2142	Samples
TLE2142ID	ACTIVE	SOIC	D	8	75	RoHS & Green	NIPDAU	Level-1-260C-UNLIM	-40 to 105	2142I	Samples
TLE2142IDR	ACTIVE	SOIC	D	8	2500	RoHS & Green	NIPDAU	Level-1-260C-UNLIM	-40 to 105	2142I	Samples
TLE2142IDRG4	ACTIVE	SOIC	D	8	2500	RoHS & Green	NIPDAU	Level-1-260C-UNLIM	-40 to 105	2142I	Samples
TLE2142IP	ACTIVE	PDIP	P	8	50	RoHS & Green	NIPDAU	N / A for Pkg Type	-40 to 105	TLE2142IP	Samples
TLE2142MD	ACTIVE	SOIC	D	8	75	RoHS & Green	NIPDAU	Level-1-260C-UNLIM	-55 to 125	2142M	Samples
TLE2142MDG4	ACTIVE	SOIC	D	8	75	RoHS & Green	NIPDAU	Level-1-260C-UNLIM		2142M	Samples
TLE2142MDR	ACTIVE	SOIC	D	8	2500	RoHS & Green	NIPDAU	Level-1-260C-UNLIM	-55 to 125	2142M	Samples
TLE2142MDRG4	ACTIVE	SOIC	D	8	2500	RoHS & Green	NIPDAU	Level-1-260C-UNLIM		2142M	Samples
TLE2142MFKB	ACTIVE	LCCC	FK	20	1	Non-RoHS & Green	SNPB	N / A for Pkg Type	-55 to 125	5962-9321603Q2A	Samples

Orderable Device	Status (1)	Package Type	Package Drawing	Pins	Package Qty	Eco Plan (2)	Lead finish/ Ball material (6)	MSL Peak Temp (3)	Op Temp (°C)	Device Marking (4/5)	Samples
										TLE2142MFKB	
TLE2142MJGB	ACTIVE	CDIP	JG	8	1	Non-RoHS & Green	SNPB	N / A for Pkg Type	-55 to 125	9321603QPA TLE2142M	Samples
TLE2142MUB	ACTIVE	CFP	U	10	1	Non-RoHS & Green	SNPB	N / A for Pkg Type	-55 to 125	9321603QHA TLE2142M	Samples
TLE2144ACN	ACTIVE	PDIP	N	14	25	RoHS & Green	NIPDAU	N / A for Pkg Type	0 to 70	TLE2144ACN	Samples
TLE2144AIN	ACTIVE	PDIP	N	14	25	RoHS & Green	NIPDAU	N / A for Pkg Type	-40 to 85	TLE2144AIN	Samples
TLE2144AMFKB	ACTIVE	LCCC	FK	20	1	Non-RoHS & Green	SNPB	N / A for Pkg Type	-55 to 125	5962-9321606Q2A TLE2144 AMFKB	Samples
TLE2144AMJB	ACTIVE	CDIP	J	14	1	Non-RoHS & Green	SNPB	N / A for Pkg Type	-55 to 125	5962-9321606QC A TLE2144AMJB	Samples
TLE2144CDW	ACTIVE	SOIC	DW	16	40	RoHS & Green	NIPDAU	Level-1-260C-UNLIM	0 to 70	TLE2144C	Samples
TLE2144CDWR	ACTIVE	SOIC	DW	16	2000	RoHS & Green	NIPDAU	Level-1-260C-UNLIM	0 to 70	TLE2144C	Samples
TLE2144CDWRG4	ACTIVE	SOIC	DW	16	2000	RoHS & Green	NIPDAU	Level-1-260C-UNLIM	0 to 70	TLE2144C	Samples
TLE2144CN	ACTIVE	PDIP	N	14	25	RoHS & Green	NIPDAU	N / A for Pkg Type	0 to 70	TLE2144CN	Samples
TLE2144IDW	ACTIVE	SOIC	DW	16	40	RoHS & Green	NIPDAU	Level-1-260C-UNLIM	-40 to 105	TLE2144I	Samples
TLE2144IDWR	ACTIVE	SOIC	DW	16	2000	RoHS & Green	NIPDAU	Level-1-260C-UNLIM	-40 to 105	TLE2144I	Samples
TLE2144IN	ACTIVE	PDIP	N	14	25	RoHS & Green	NIPDAU	N / A for Pkg Type	-40 to 105	TLE2144IN	Samples
TLE2144MDW	ACTIVE	SOIC	DW	16	40	RoHS & Green	NIPDAU	Level-1-260C-UNLIM	-55 to 125	TLE2144M	Samples
TLE2144MDWG4	ACTIVE	SOIC	DW	16	40	RoHS & Green	NIPDAU	Level-1-260C-UNLIM		TLE2144M	Samples
TLE2144MFKB	ACTIVE	LCCC	FK	20	1	Non-RoHS & Green	SNPB	N / A for Pkg Type	-55 to 125	5962-9321605Q2A TLE2144MFKB	Samples
TLE2144MJB	ACTIVE	CDIP	J	14	1	Non-RoHS & Green	SNPB	N / A for Pkg Type	-55 to 125	5962-9321605QC A TLE2144MJB	Samples

(1) The marketing status values are defined as follows:
ACTIVE: Product device recommended for new designs.
LIFEBUY: TI has announced that the device will be discontinued, and a lifetime-buy period is in effect.
NRND: Not recommended for new designs. Device is in production to support existing customers, but TI does not recommend using this part in a new design.
PREVIEW: Device has been announced but is not in production. Samples may or may not be available.
OBSOLETE: TI has discontinued the production of the device.

(2) **RoHS:** TI defines "RoHS" to mean semiconductor products that are compliant with the current EU RoHS requirements for all 10 RoHS substances, including the requirement that RoHS substance do not exceed 0.1% by weight in homogeneous materials. Where designed to be soldered at high temperatures, "RoHS" products are suitable for use in specified lead-free processes. TI may reference these types of products as "Pb-Free".
RoHS Exempt: TI defines "RoHS Exempt" to mean products that contain lead but are compliant with EU RoHS pursuant to a specific EU RoHS exemption.
Green: TI defines "Green" to mean the content of Chlorine (Cl) and Bromine (Br) based flame retardants meet JS709B low halogen requirements of <=1000ppm threshold. Antimony trioxide based flame retardants must also meet the <=1000ppm threshold requirement.

(3) MSL, Peak Temp. - The Moisture Sensitivity Level rating according to the JEDEC industry standard classifications, and peak solder temperature.

(4) There may be additional marking, which relates to the logo, the lot trace code information, or the environmental category on the device.

(5) Multiple Device Markings will be inside parentheses. Only one Device Marking contained in parentheses and separated by a "~" will appear on a device. If a line is indented then it is a continuation of the previous line and the two combined represent the entire Device Marking for that device.

(6) Lead finish/Ball material - Orderable Devices may have multiple material finish options. Finish options are separated by a vertical ruled line. Lead finish/Ball material values may wrap to two lines if the finish value exceeds the maximum column width.

Important Information and Disclaimer: The information provided on this page represents TI's knowledge and belief as of the date that it is provided. TI bases its knowledge and belief on information provided by third parties, and makes no representation or warranty as to the accuracy of such information. Efforts are underway to better integrate information from third parties. TI has taken and continues to take reasonable steps to provide representative and accurate information but may not have conducted destructive testing or chemical analysis on incoming materials and chemicals. TI and TI suppliers consider certain information to be proprietary, and thus CAS numbers and other limited information may not be available for release.

In no event shall TI's liability arising out of such information exceed the total purchase price of the TI part(s) at issue in this document sold by TI to Customer on an annual basis.

OTHER QUALIFIED VERSIONS OF TLE2141, TLE2141A, TLE2142, TLE2142A, TLE2142AM, TLE2142M, TLE2144, TLE2144A, TLE2144AM, TLE2144M :

- Catalog : TLE2142A, TLE2142, TLE2144A, TLE2144
- Automotive : TLE2141-Q1, TLE2142-Q1, TLE2142-Q1
- Enhanced Product : TLE2141-EP, TLE2144-EP, TLE2144-EP

- Military : TLE2141M, TLE2141AM, TLE2142M, TLE2142AM, TLE2144M, TLE2144AM

NOTE: Qualified Version Definitions:

- Catalog - TI's standard catalog product
- Automotive - Q100 devices qualified for high-reliability automotive applications targeting zero defects
- Enhanced Product - Supports Defense, Aerospace and Medical Applications
- Military - QML certified for Military and Defense Applications

TAPE AND REEL INFORMATION

REEL DIMENSIONS

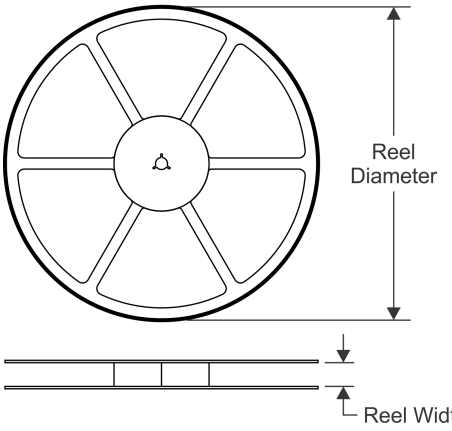

TAPE DIMENSIONS

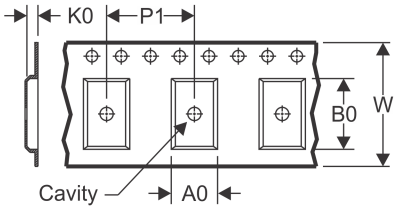

A0	Dimension designed to accommodate the component width
B0	Dimension designed to accommodate the component length
K0	Dimension designed to accommodate the component thickness
W	Overall width of the carrier tape
P1	Pitch between successive cavity centers

QUADRANT ASSIGNMENTS FOR PIN 1 ORIENTATION IN TAPE

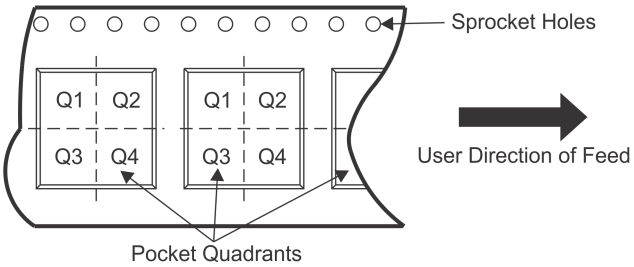

*All dimensions are nominal

Device	Package Type	Package Drawing	Pins	SPQ	Reel Diameter (mm)	Reel Width W1 (mm)	A0 (mm)	B0 (mm)	K0 (mm)	P1 (mm)	W (mm)	Pin1 Quadrant
TLE2141AIDR	SOIC	D	8	2500	330.0	12.4	6.4	5.2	2.1	8.0	12.0	Q1
TLE2141CDR	SOIC	D	8	2500	330.0	12.4	6.4	5.2	2.1	8.0	12.0	Q1
TLE2141IDR	SOIC	D	8	2500	330.0	12.4	6.4	5.2	2.1	8.0	12.0	Q1
TLE2141MDR	SOIC	D	8	2500	330.0	12.4	6.4	5.2	2.1	8.0	12.0	Q1
TLE2142ACDR	SOIC	D	8	2500	330.0	12.4	6.4	5.2	2.1	8.0	12.0	Q1
TLE2142AIDR	SOIC	D	8	2500	330.0	12.4	6.4	5.2	2.1	8.0	12.0	Q1
TLE2142AMDR	SOIC	D	8	2500	330.0	12.4	6.4	5.2	2.1	8.0	12.0	Q1
TLE2142AMDRG4	SOIC	D	8	2500	330.0	12.4	6.4	5.2	2.1	8.0	12.0	Q1
TLE2142CDR	SOIC	D	8	2500	330.0	12.4	6.4	5.2	2.1	8.0	12.0	Q1
TLE2142CPWR	TSSOP	PW	16	2000	330.0	12.4	6.9	5.6	1.6	8.0	12.0	Q1
TLE2142IDR	SOIC	D	8	2500	330.0	12.4	6.4	5.2	2.1	8.0	12.0	Q1
TLE2142MDR	SOIC	D	8	2500	330.0	12.4	6.4	5.2	2.1	8.0	12.0	Q1
TLE2142MDRG4	SOIC	D	8	2500	330.0	12.4	6.4	5.2	2.1	8.0	12.0	Q1
TLE2144CDWR	SOIC	DW	16	2000	330.0	16.4	10.75	10.7	2.7	12.0	16.0	Q1
TLE2144IDWR	SOIC	DW	16	2000	330.0	16.4	10.75	10.7	2.7	12.0	16.0	Q1

TAPE AND REEL BOX DIMENSIONS

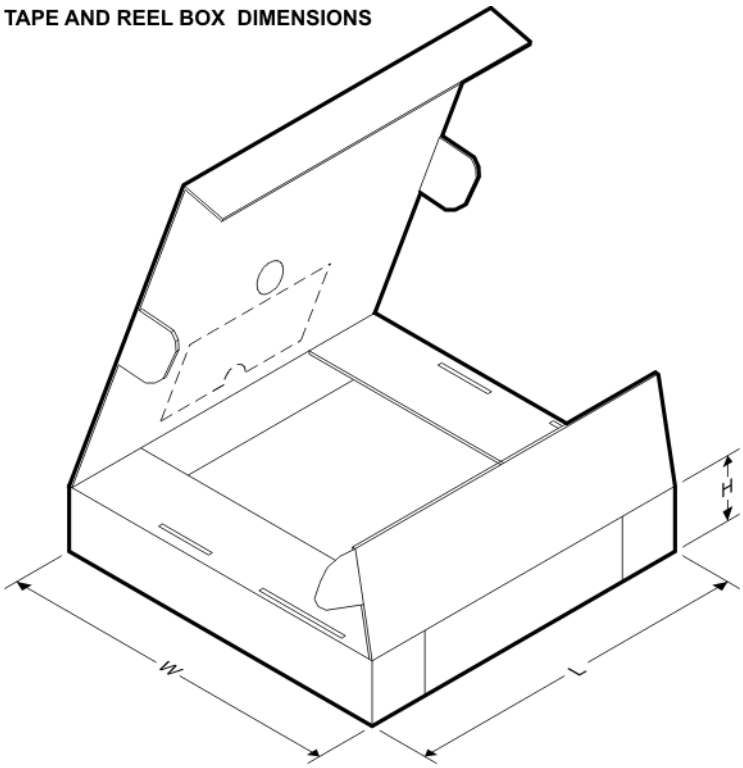

*All dimensions are nominal

Device	Package Type	Package Drawing	Pins	SPQ	Length (mm)	Width (mm)	Height (mm)
TLE2141AIDR	SOIC	D	8	2500	340.5	336.1	25.0
TLE2141CDR	SOIC	D	8	2500	340.5	336.1	25.0
TLE2141IDR	SOIC	D	8	2500	340.5	336.1	25.0
TLE2141MDR	SOIC	D	8	2500	350.0	350.0	43.0
TLE2142ACDR	SOIC	D	8	2500	340.5	336.1	25.0
TLE2142AIDR	SOIC	D	8	2500	340.5	336.1	25.0
TLE2142AMDR	SOIC	D	8	2500	350.0	350.0	43.0
TLE2142AMDRG4	SOIC	D	8	2500	350.0	350.0	43.0
TLE2142CDR	SOIC	D	8	2500	340.5	336.1	25.0
TLE2142CPWR	TSSOP	PW	16	2000	853.0	449.0	35.0
TLE2142IDR	SOIC	D	8	2500	340.5	336.1	25.0
TLE2142MDR	SOIC	D	8	2500	350.0	350.0	43.0
TLE2142MDRG4	SOIC	D	8	2500	350.0	350.0	43.0
TLE2144CDWR	SOIC	DW	16	2000	350.0	350.0	43.0
TLE2144IDWR	SOIC	DW	16	2000	350.0	350.0	43.0

TUBE

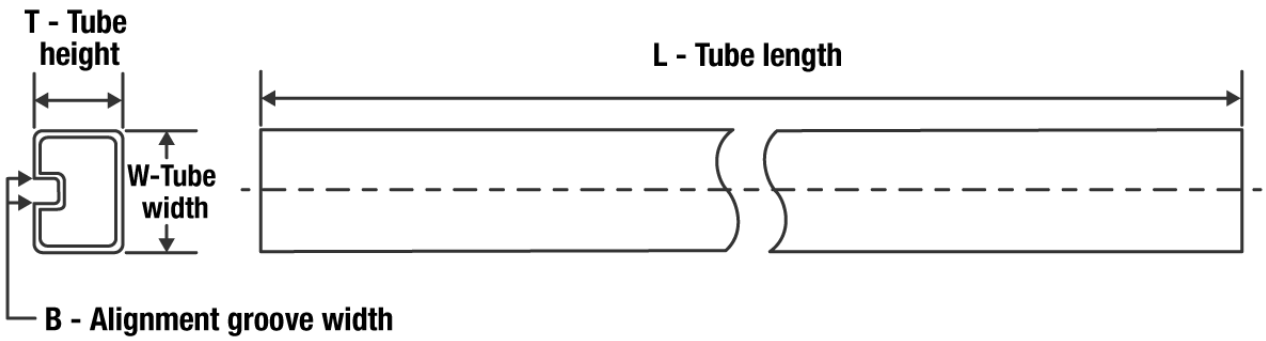

*All dimensions are nominal

Device	Package Name	Package Type	Pins	SPQ	L (mm)	W (mm)	T (µm)	B (mm)
5962-9321603Q2A	FK	LCCC	20	1	506.98	12.06	2030	NA
5962-9321604Q2A	FK	LCCC	20	1	506.98	12.06	2030	NA
5962-9321605Q2A	FK	LCCC	20	1	506.98	12.06	2030	NA
5962-9321606Q2A	FK	LCCC	20	1	506.98	12.06	2030	NA
TLE2141ACD	D	SOIC	8	75	505.46	6.76	3810	4
TLE2141ACD	D	SOIC	8	75	507	8	3940	4.32
TLE2141ACP	P	PDIP	8	50	506	13.97	11230	4.32
TLE2141AID	D	SOIC	8	75	505.46	6.76	3810	4
TLE2141AID	D	SOIC	8	75	507	8	3940	4.32
TLE2141AIP	P	PDIP	8	50	506	13.97	11230	4.32
TLE2141CD	D	SOIC	8	75	505.46	6.76	3810	4
TLE2141CD	D	SOIC	8	75	507	8	3940	4.32
TLE2141CP	P	PDIP	8	50	506	13.97	11230	4.32
TLE2141CPE4	P	PDIP	8	50	506	13.97	11230	4.32
TLE2141ID	D	SOIC	8	75	507	8	3940	4.32
TLE2141ID	D	SOIC	8	75	505.46	6.76	3810	4
TLE2141IP	P	PDIP	8	50	506	13.97	11230	4.32
TLE2141IPE4	P	PDIP	8	50	506	13.97	11230	4.32
TLE2141MD	D	SOIC	8	75	505.46	6.76	3810	4
TLE2142ACD	D	SOIC	8	75	507	8	3940	4.32
TLE2142ACDG4	D	SOIC	8	75	507	8	3940	4.32
TLE2142AID	D	SOIC	8	75	505.46	6.76	3810	4
TLE2142AID	D	SOIC	8	75	507	8	3940	4.32
TLE2142AMD	D	SOIC	8	75	505.46	6.76	3810	4
TLE2142AMDG4	D	SOIC	8	75	505.46	6.76	3810	4
TLE2142AMFKB	FK	LCCC	20	1	506.98	12.06	2030	NA
TLE2142CD	D	SOIC	8	75	505.46	6.76	3810	4
TLE2142CD	D	SOIC	8	75	507	8	3940	4.32

Device	Package Name	Package Type	Pins	SPQ	L (mm)	W (mm)	T (µm)	B (mm)
TLE2142CDG4	D	SOIC	8	75	507	8	3940	4.32
TLE2142CDG4	D	SOIC	8	75	505.46	6.76	3810	4
TLE2142CP	P	PDIP	8	50	506	13.97	11230	4.32
TLE2142ID	D	SOIC	8	75	505.46	6.76	3810	4
TLE2142ID	D	SOIC	8	75	507	8	3940	4.32
TLE2142IP	P	PDIP	8	50	506	13.97	11230	4.32
TLE2142MD	D	SOIC	8	75	505.46	6.76	3810	4
TLE2142MDG4	D	SOIC	8	75	505.46	6.76	3810	4
TLE2142MFKB	FK	LCCC	20	1	506.98	12.06	2030	NA
TLE2144ACN	N	PDIP	14	25	506	13.97	11230	4.32
TLE2144AIN	N	PDIP	14	25	506	13.97	11230	4.32
TLE2144AMFKB	FK	LCCC	20	1	506.98	12.06	2030	NA
TLE2144CDW	DW	SOIC	16	40	506.98	12.7	4826	6.6
TLE2144CN	N	PDIP	14	25	506	13.97	11230	4.32
TLE2144IDW	DW	SOIC	16	40	506.98	12.7	4826	6.6
TLE2144IN	N	PDIP	14	25	506	13.97	11230	4.32
TLE2144MDW	DW	SOIC	16	40	506.98	12.7	4826	6.6
TLE2144MDWG4	DW	SOIC	16	40	506.98	12.7	4826	6.6
TLE2144MFKB	FK	LCCC	20	1	506.98	12.06	2030	NA

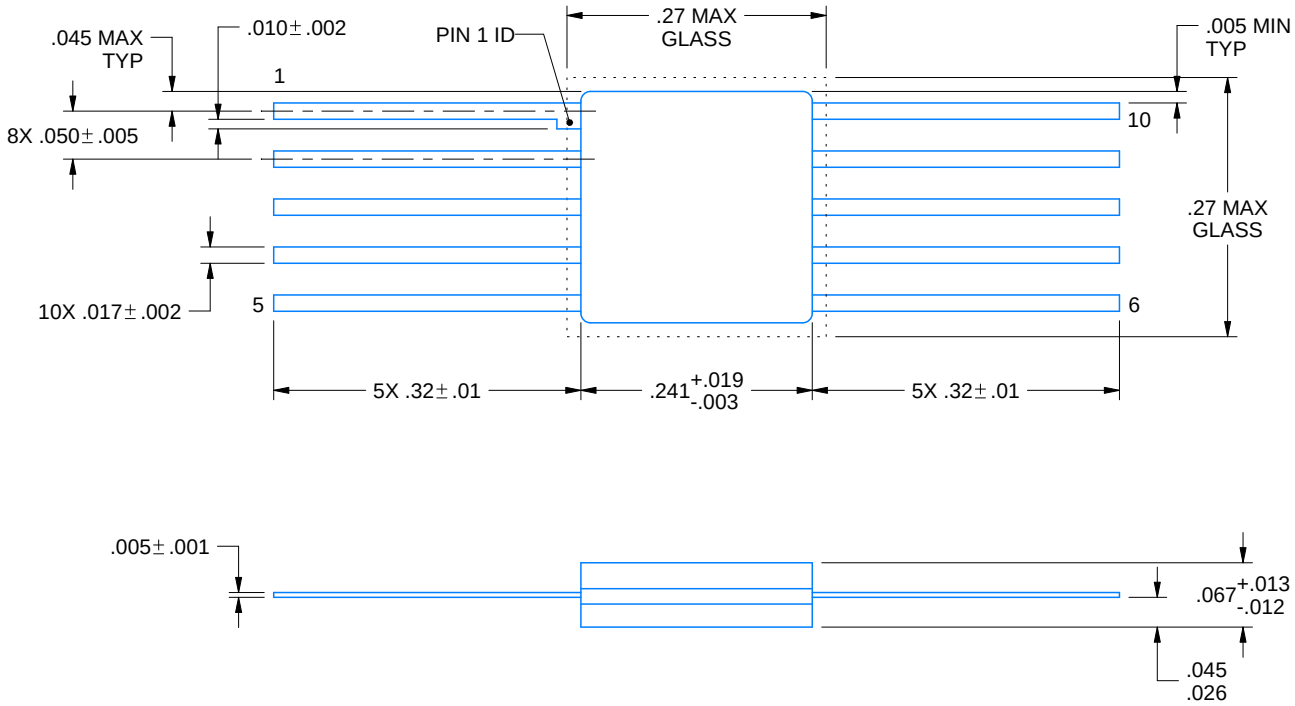

4225582/A 01/2020

NOTES:

1. All linear dimensions are in inches. Any dimensions in parenthesis are for reference only. Dimensioning and tolerancing per ASME Y14.5M.
2. This drawing is subject to change without notice.

FK (S–CQCC–N**) LEADLESS CERAMIC CHIP CARRIER

28 TERMINAL SHOWN

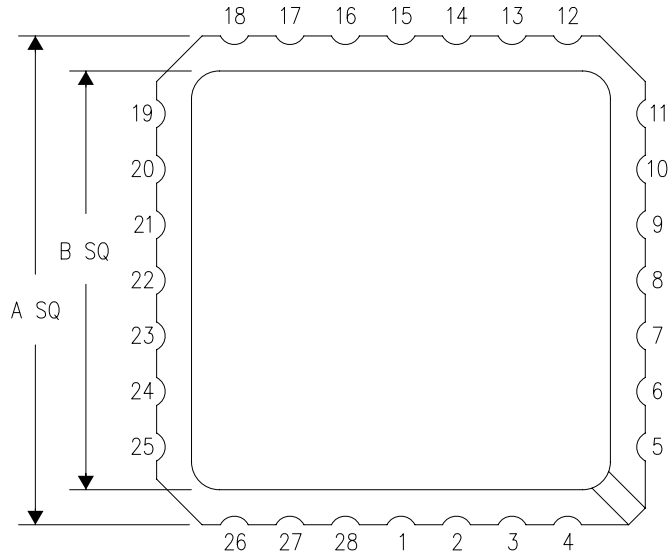

NO. OF TERMINALS **	A		B	
	MIN	MAX	MIN	MAX
20	0.342 (8,69)	0.358 (9,09)	0.307 (7,80)	0.358 (9,09)
28	0.442 (11,23)	0.458 (11,63)	0.406 (10,31)	0.458 (11,63)
44	0.640 (16,26)	0.660 (16,76)	0.495 (12,58)	0.560 (14,22)
52	0.740 (18,78)	0.761 (19,32)	0.495 (12,58)	0.560 (14,22)
68	0.938 (23,83)	0.962 (24,43)	0.850 (21,6)	0.858 (21,8)
84	1.141 (28,99)	1.165 (29,59)	1.047 (26,6)	1.063 (27,0)

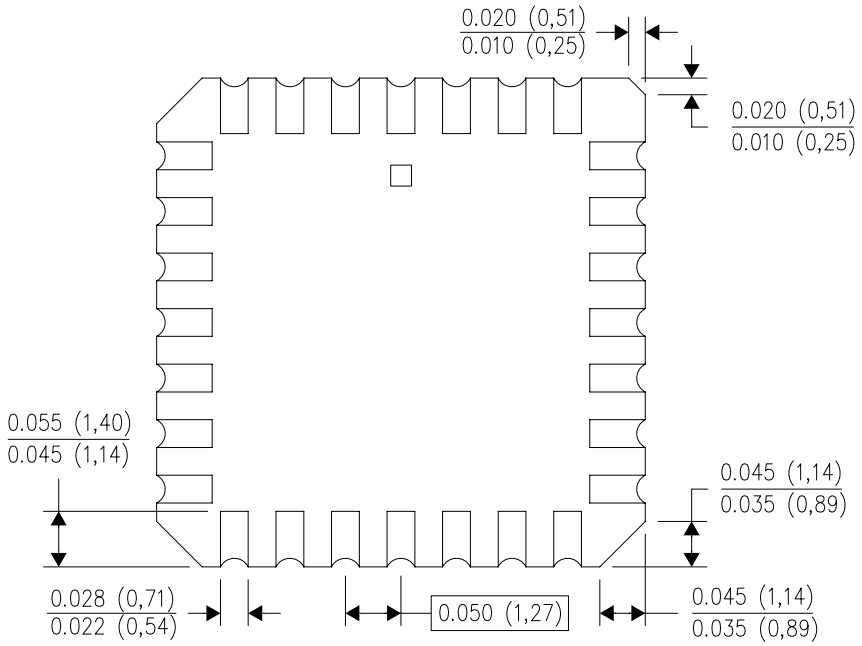

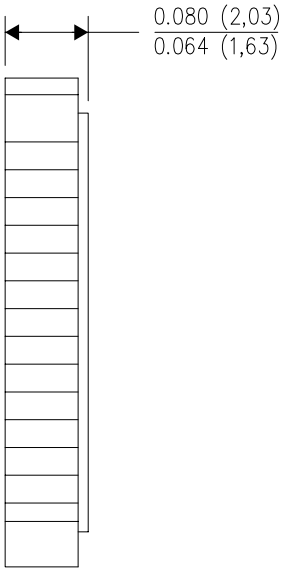

4040140/D 01/11

NOTES:
A. All linear dimensions are in inches (millimeters).
B. This drawing is subject to change without notice.
C. This package can be hermetically sealed with a metal lid.
D. Falls within JEDEC MS–004

PW0016A

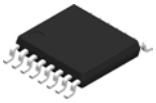

PACKAGE OUTLINE

TSSOP - 1.2 mm max height

SMALL OUTLINE PACKAGE

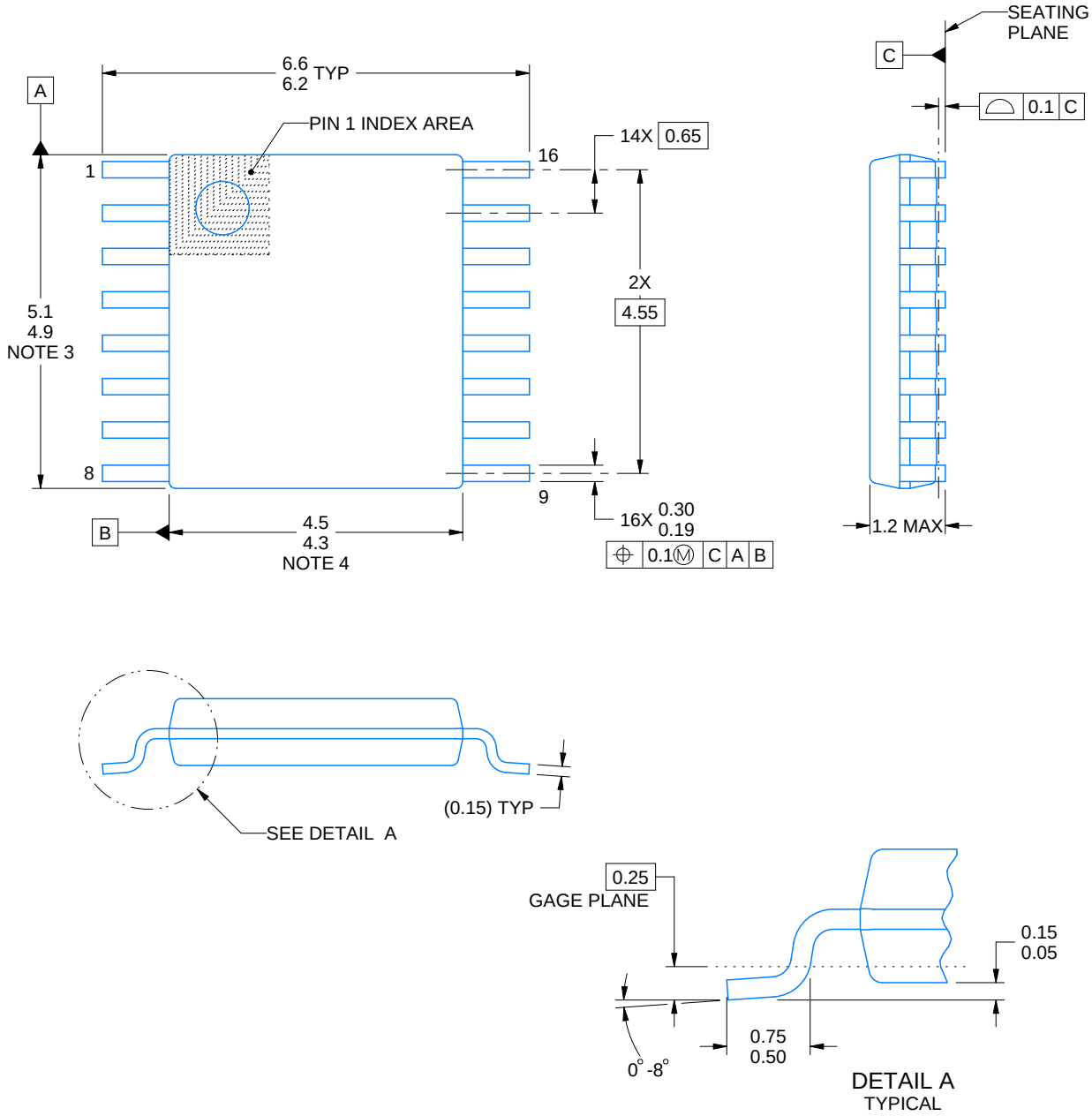

NOTES:

1. All linear dimensions are in millimeters. Any dimensions in parenthesis are for reference only. Dimensioning and tolerancing per ASME Y14.5M.
2. This drawing is subject to change without notice.
3. This dimension does not include mold flash, protrusions, or gate burrs. Mold flash, protrusions, or gate burrs shall not exceed 0.15 mm per side.
4. This dimension does not include interlead flash. Interlead flash shall not exceed 0.25 mm per side.
5. Reference JEDEC registration MO-153.

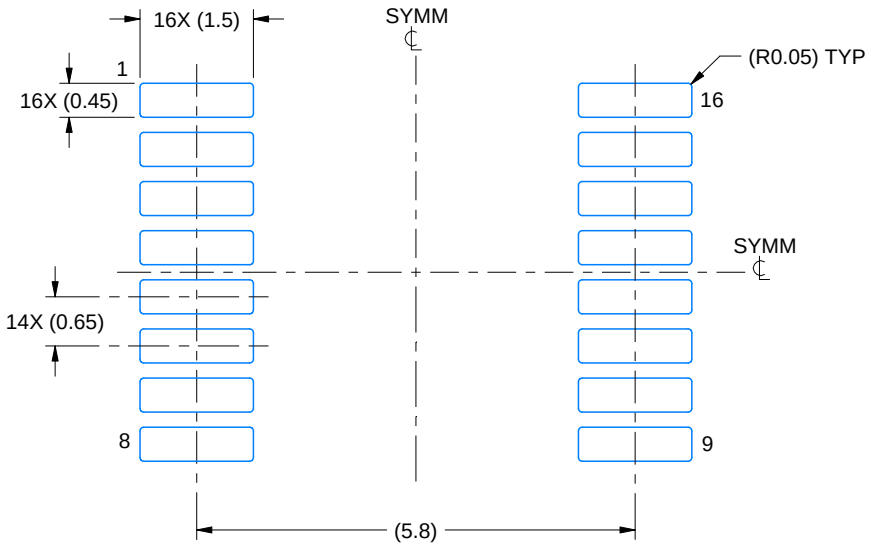

LAND PATTERN EXAMPLE
EXPOSED METAL SHOWN
SCALE: 10X

NON-SOLDER MASK DEFINED (PREFERRED)

SOLDER MASK DEFINED

SOLDER MASK DETAILS

4220204/A 02/2017

NOTES: (continued)

6. Publication IPC-7351 may have alternate designs.
7. Solder mask tolerances between and around signal pads can vary based on board fabrication site.

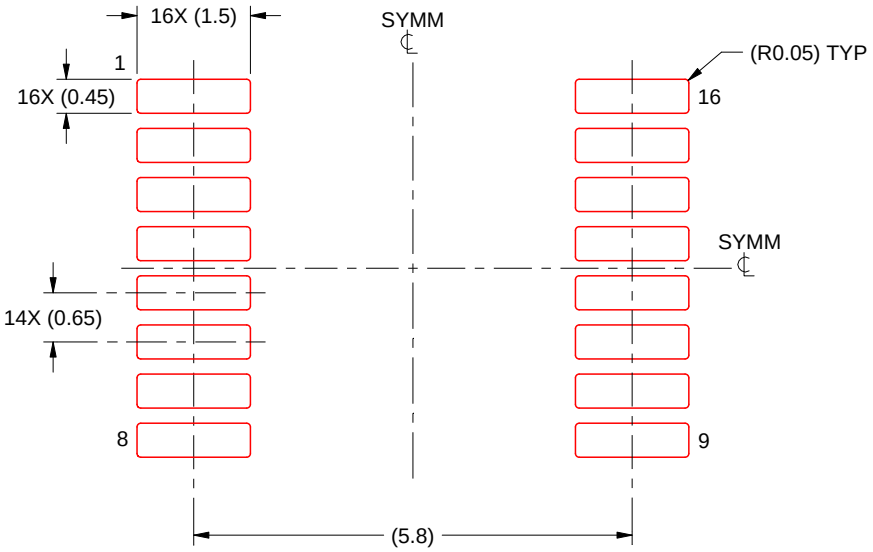

SOLDER PASTE EXAMPLE
BASED ON 0.125 mm THICK STENCIL
SCALE: 10X

4220204/A 02/2017

NOTES: (continued)

8. Laser cutting apertures with trapezoidal walls and rounded corners may offer better paste release. IPC-7525 may have alternate design recommendations.
9. Board assembly site may have different recommendations for stencil design.

GENERIC PACKAGE VIEW

DW 16

SOIC - 2.65 mm max height

7.5 x 10.3, 1.27 mm pitch

SMALL OUTLINE INTEGRATED CIRCUIT

This image is a representation of the package family, actual package may vary.
Refer to the product data sheet for package details.

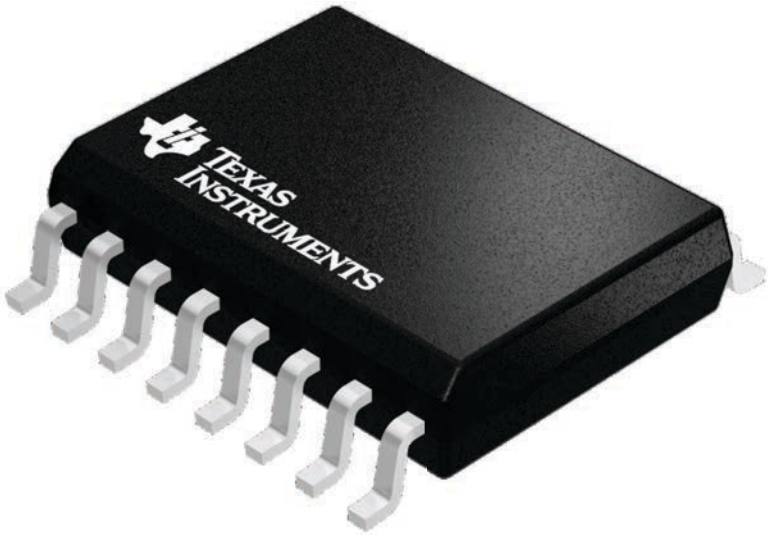

4224780/A

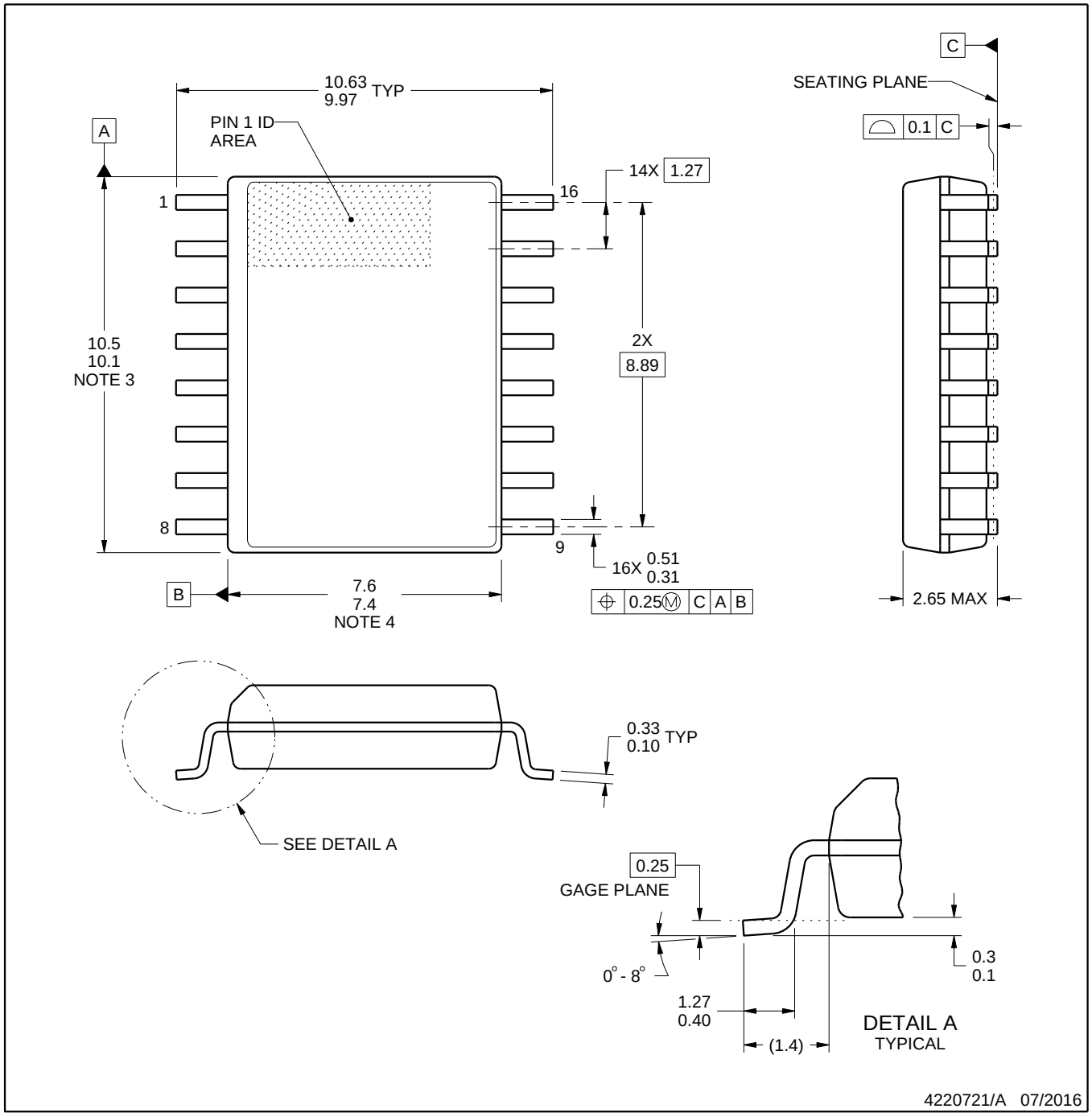

NOTES:

1. All linear dimensions are in millimeters. Dimensions in parenthesis are for reference only. Dimensioning and tolerancing per ASME Y14.5M.
2. This drawing is subject to change without notice.
3. This dimension does not include mold flash, protrusions, or gate burrs. Mold flash, protrusions, or gate burrs shall not exceed 0.15 mm, per side.
4. This dimension does not include interlead flash. Interlead flash shall not exceed 0.25 mm, per side.
5. Reference JEDEC registration MS-013.

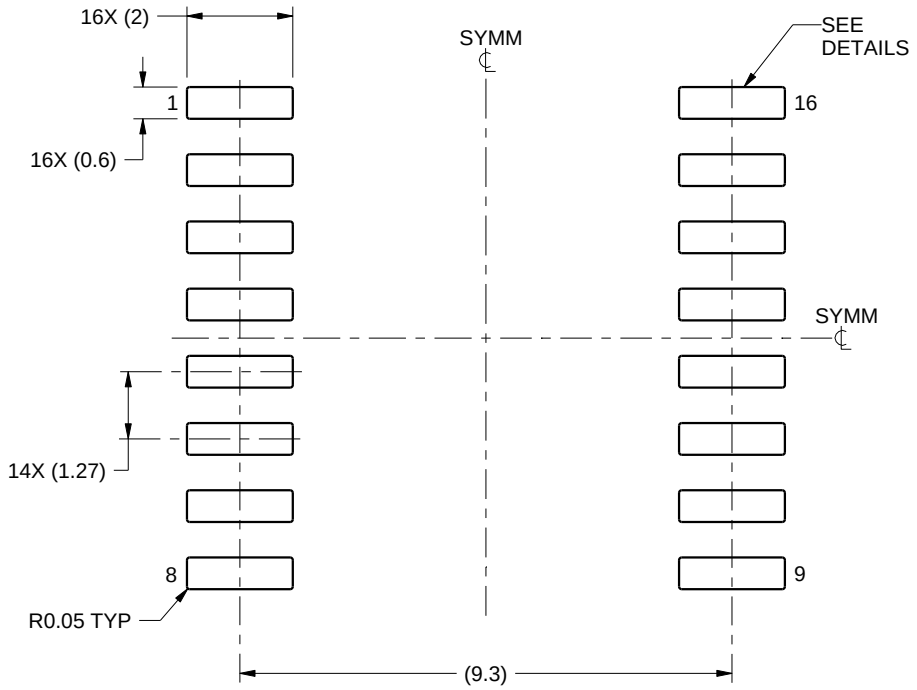

LAND PATTERN EXAMPLE
SCALE:7X

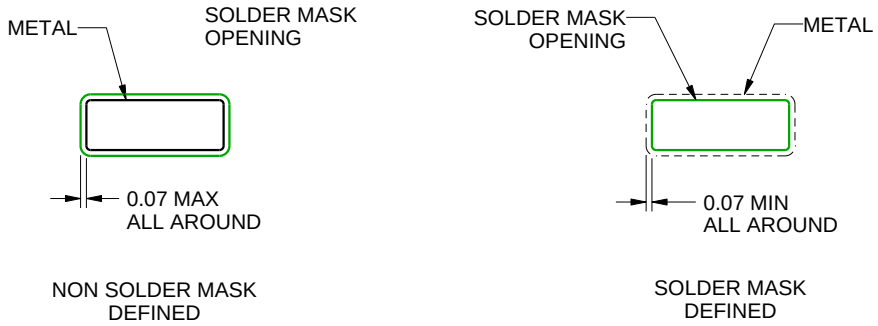

SOLDER MASK DETAILS

4220721/A 07/2016

NOTES: (continued)

6. Publication IPC-7351 may have alternate designs.
7. Solder mask tolerances between and around signal pads can vary based on board fabrication site.

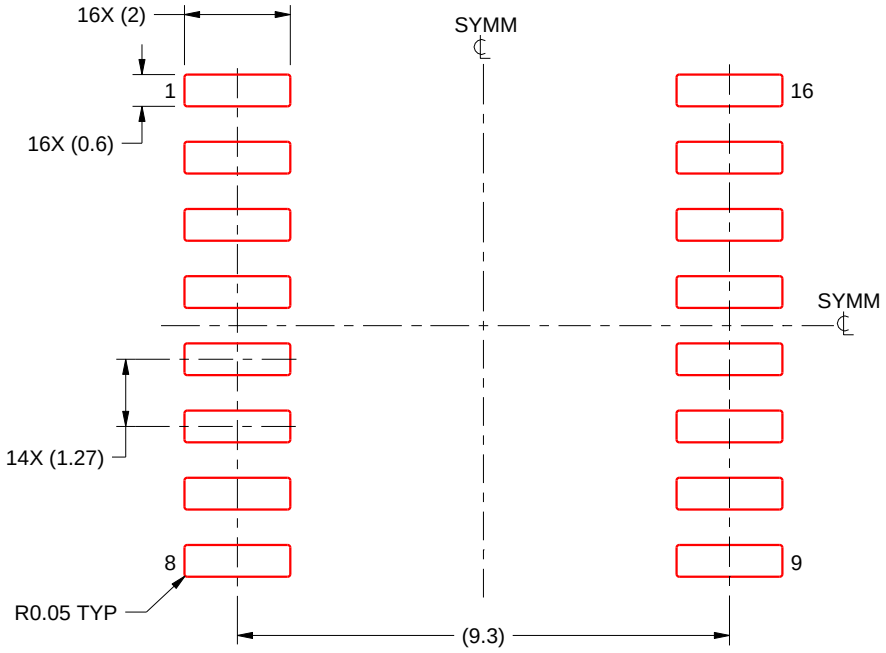

SOLDER PASTE EXAMPLE
BASED ON 0.125 mm THICK STENCIL
SCALE:7X

4220721/A 07/2016

NOTES: (continued)

8. Laser cutting apertures with trapezoidal walls and rounded corners may offer better paste release. IPC-7525 may have alternate design recommendations.
9. Board assembly site may have different recommendations for stencil design.

J 14 CDIP - 5.08 mm max height

CERAMIC DUAL IN LINE PACKAGE

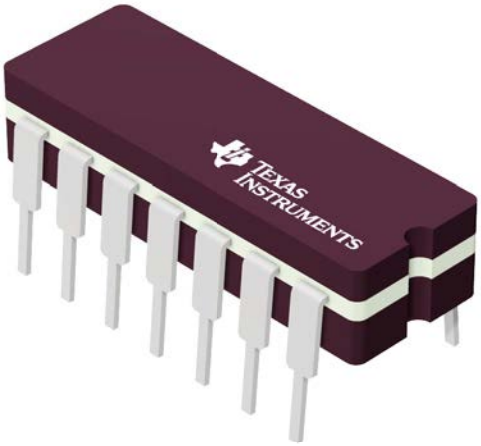

Images above are just a representation of the package family, actual package may vary.
Refer to the product data sheet for package details.

4040083-5/G

PACKAGE OUTLINE

J0014A

CDIP - 5.08 mm max height

CERAMIC DUAL IN LINE PACKAGE

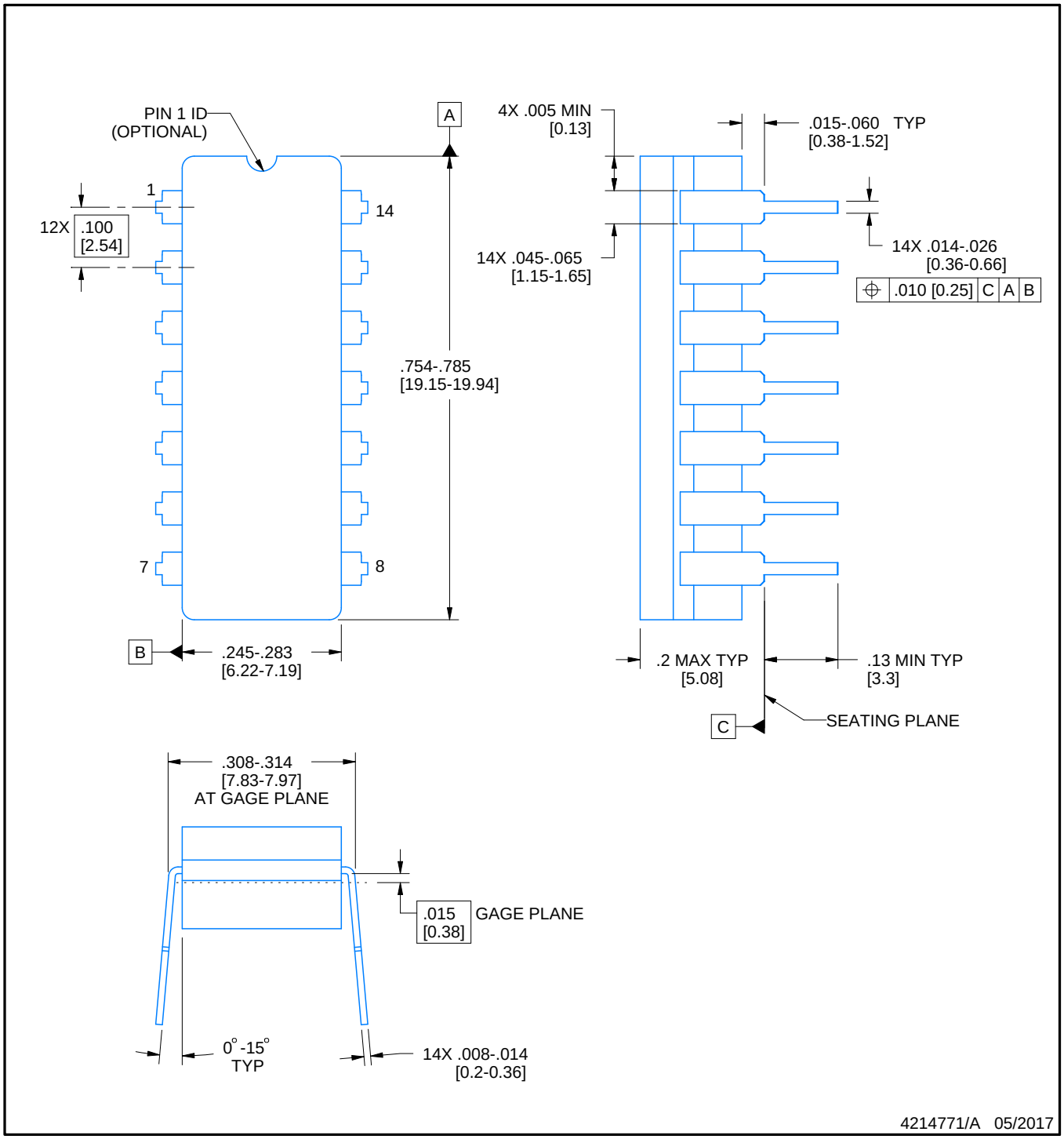

NOTES:

1. All controlling linear dimensions are in inches. Dimensions in brackets are in millimeters. Any dimension in brackets or parenthesis are for reference only. Dimensioning and tolerancing per ASME Y14.5M.
2. This drawing is subject to change without notice.
3. This package is hermitically sealed with a ceramic lid using glass frit.
4. Index point is provided on cap for terminal identification only and on press ceramic glass frit seal only.
5. Falls within MIL-STD-1835 and GDIP1-T14.

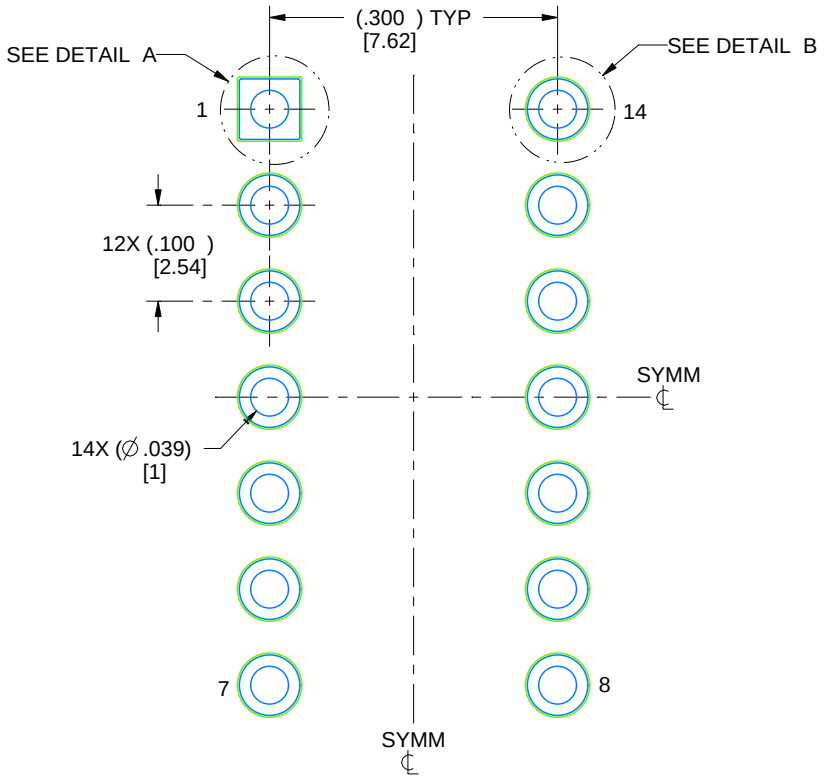

LAND PATTERN EXAMPLE
NON-SOLDER MASK DEFINED
SCALE: 5X

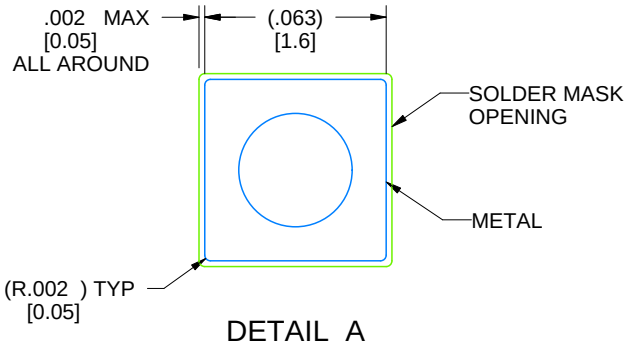

DETAIL A
SCALE: 15X

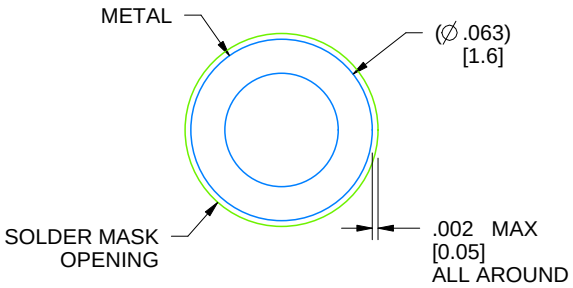

DETAIL B
13X, SCALE: 15X

4214771/A 05/2017

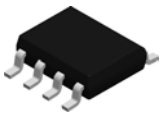

PACKAGE OUTLINE

D0008A

SOIC - 1.75 mm max height

SMALL OUTLINE INTEGRATED CIRCUIT

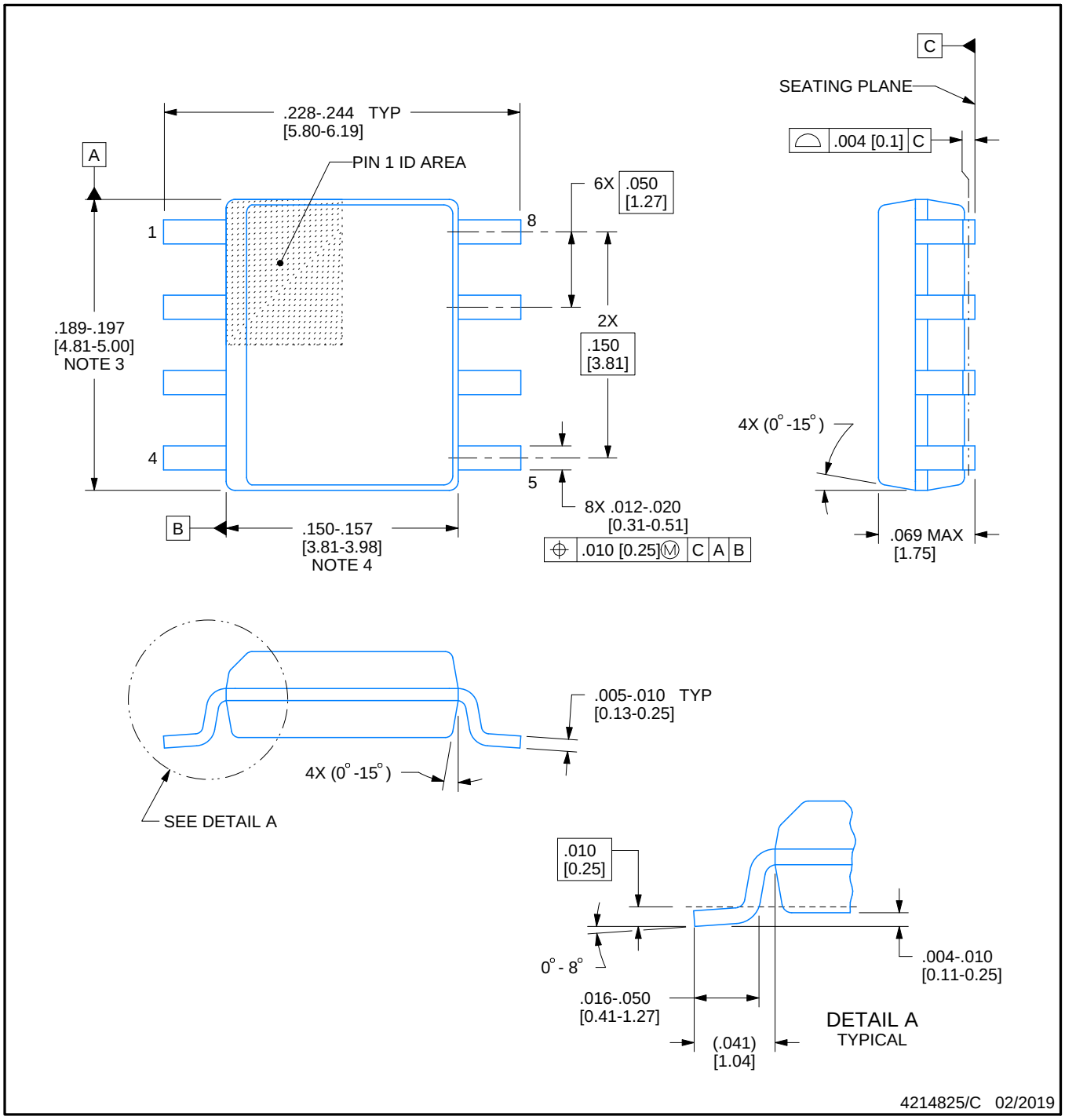

NOTES:

1. Linear dimensions are in inches [millimeters]. Dimensions in parenthesis are for reference only. Controlling dimensions are in inches. Dimensioning and tolerancing per ASME Y14.5M.
2. This drawing is subject to change without notice.
3. This dimension does not include mold flash, protrusions, or gate burrs. Mold flash, protrusions, or gate burrs shall not exceed .006 [0.15] per side.
4. This dimension does not include interlead flash.
5. Reference JEDEC registration MS-012, variation AA.

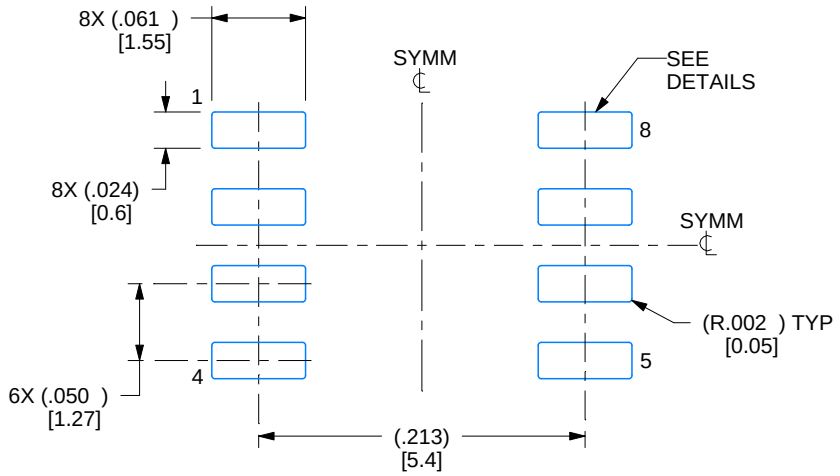

LAND PATTERN EXAMPLE
EXPOSED METAL SHOWN
SCALE:8X

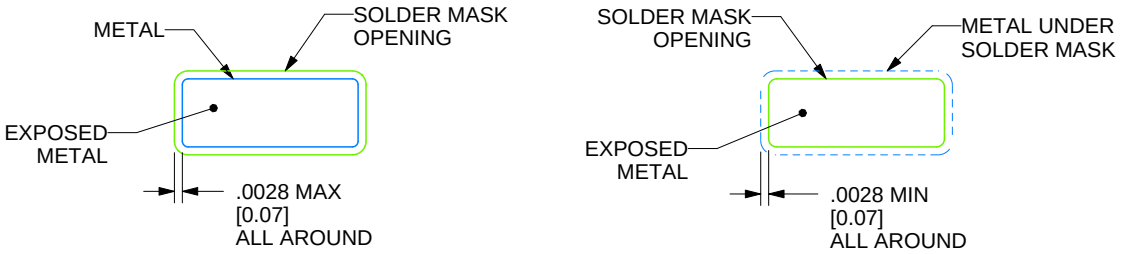

SOLDER MASK DETAILS

4214825/C 02/2019

NOTES: (continued)

6. Publication IPC-7351 may have alternate designs.
7. Solder mask tolerances between and around signal pads can vary based on board fabrication site.

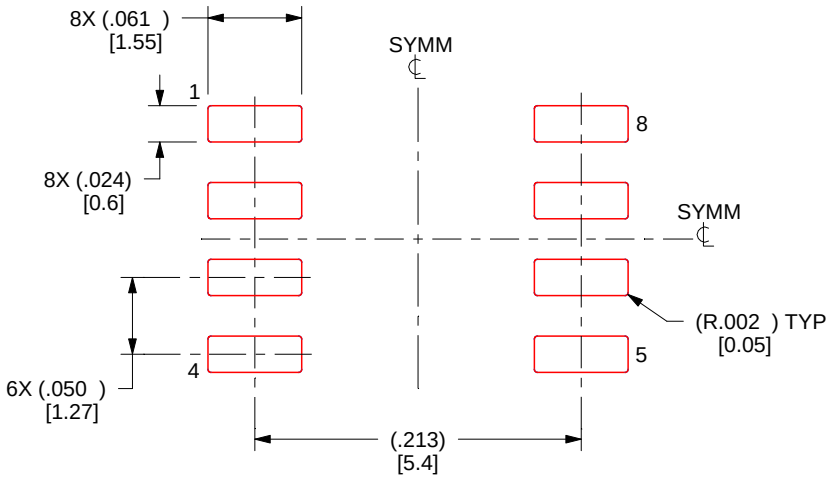

SOLDER PASTE EXAMPLE
BASED ON .005 INCH [0.125 MM] THICK STENCIL
SCALE:8X

4214825/C 02/2019

NOTES: (continued)

8. Laser cutting apertures with trapezoidal walls and rounded corners may offer better paste release. IPC-7525 may have alternate design recommendations.
9. Board assembly site may have different recommendations for stencil design.

JG (R-GDIP-T8) **CERAMIC DUAL-IN-LINE**

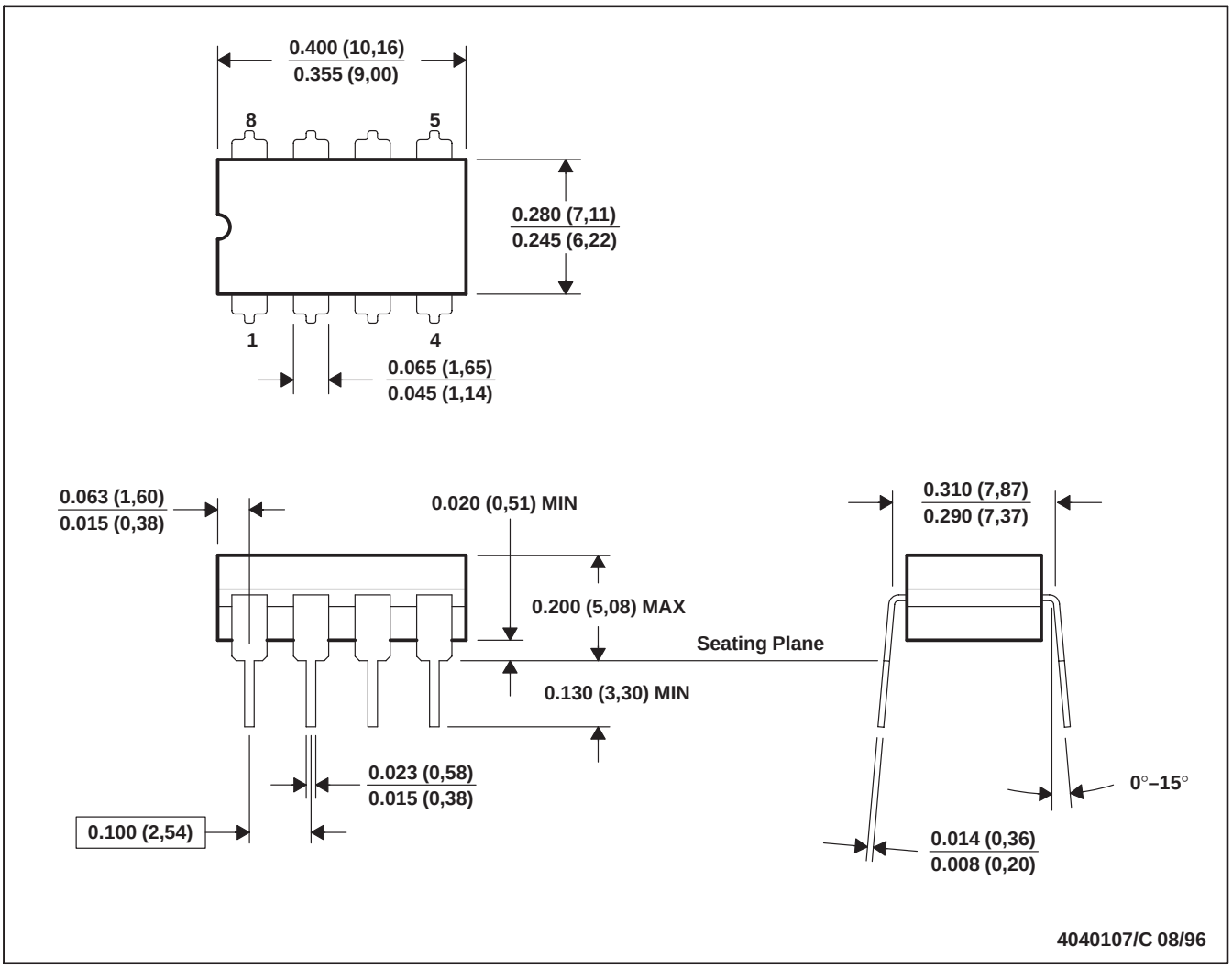

NOTES: A. All linear dimensions are in inches (millimeters).
B. This drawing is subject to change without notice.
C. This package can be hermetically sealed with a ceramic lid using glass frit.
D. Index point is provided on cap for terminal identification.
E. Falls within MIL STD 1835 GDIP1-T8

P (R–PDIP–T8) PLASTIC DUAL–IN–LINE PACKAGE

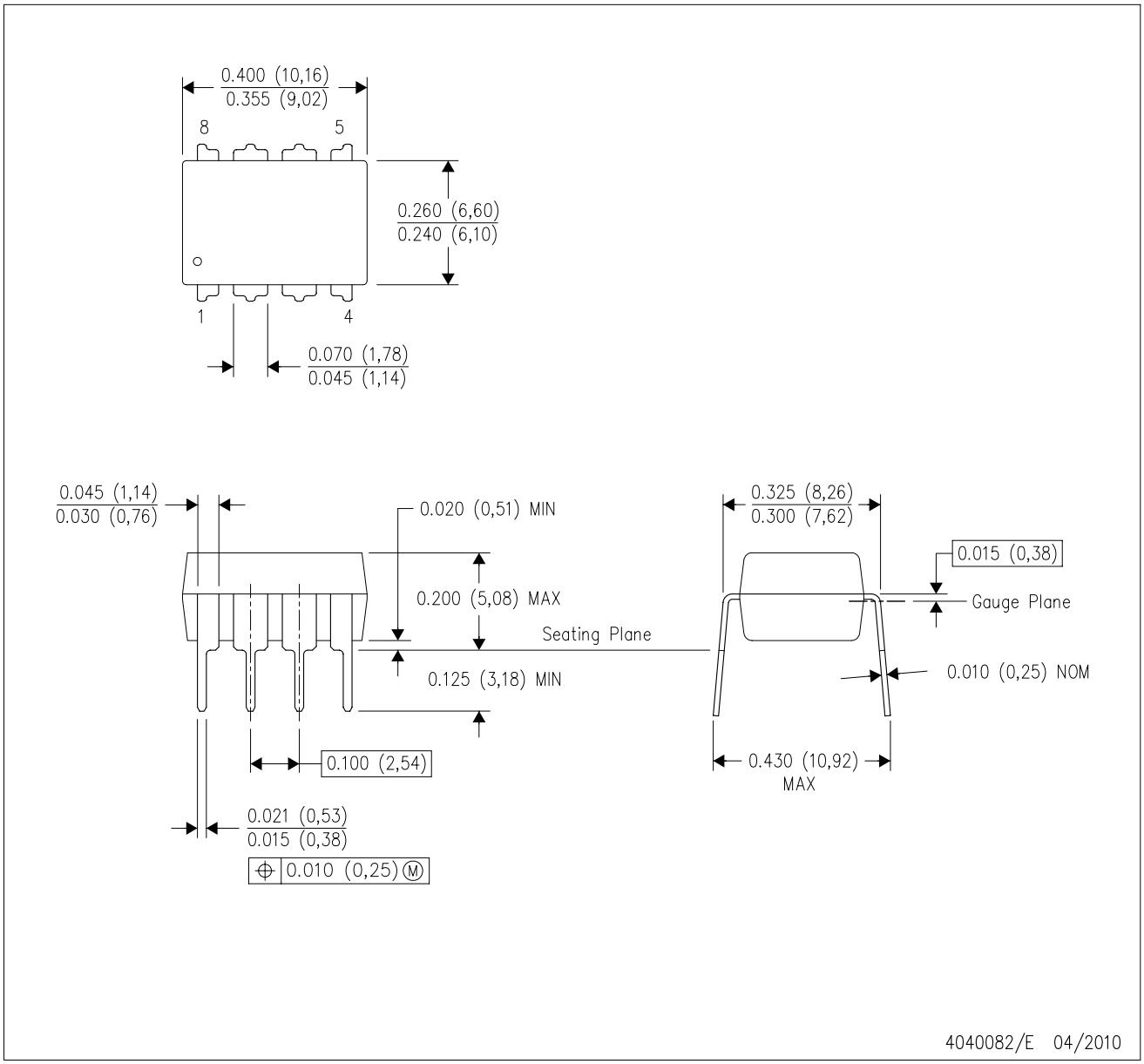

NOTES:
A. All linear dimensions are in inches (millimeters).
B. This drawing is subject to change without notice.
C. Falls within JEDEC MS–001 variation BA.

N (R–PDIP–T**) PLASTIC DUAL–IN–LINE PACKAGE

16 PINS SHOWN

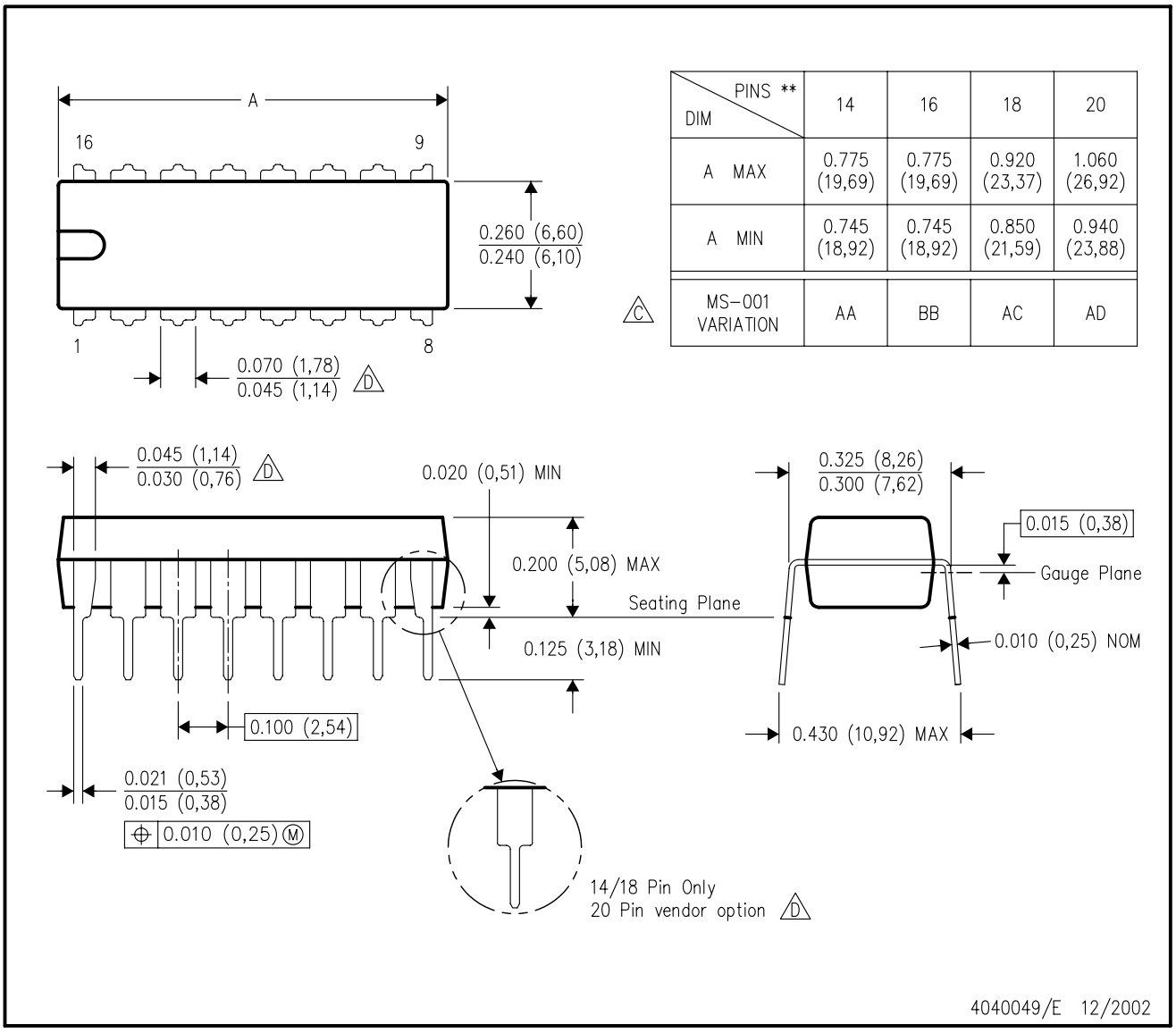

DIM \ PINS **	14	16	18	20
A MAX	0.775 (19,69)	0.775 (19,69)	0.920 (23,37)	1.060 (26,92)
A MIN	0.745 (18,92)	0.745 (18,92)	0.850 (21,59)	0.940 (23,88)
MS–001 VARIATION (C)	AA	BB	AC	AD

NOTES:
A. All linear dimensions are in inches (millimeters).
B. This drawing is subject to change without notice.
C. Falls within JEDEC MS–001, except 18 and 20 pin minimum body length (Dim A).
D. The 20 pin end lead shoulder width is a vendor option, either half or full width.

IMPORTANT NOTICE AND DISCLAIMER

TI PROVIDES TECHNICAL AND RELIABILITY DATA (INCLUDING DATA SHEETS), DESIGN RESOURCES (INCLUDING REFERENCE DESIGNS), APPLICATION OR OTHER DESIGN ADVICE, WEB TOOLS, SAFETY INFORMATION, AND OTHER RESOURCES “AS IS” AND WITH ALL FAULTS, AND DISCLAIMS ALL WARRANTIES, EXPRESS AND IMPLIED, INCLUDING WITHOUT LIMITATION ANY IMPLIED WARRANTIES OF MERCHANTABILITY, FITNESS FOR A PARTICULAR PURPOSE OR NON-INFRINGEMENT OF THIRD PARTY INTELLECTUAL PROPERTY RIGHTS.

These resources are intended for skilled developers designing with TI products. You are solely responsible for (1) selecting the appropriate TI products for your application, (2) designing, validating and testing your application, and (3) ensuring your application meets applicable standards, and any other safety, security, regulatory or other requirements.

These resources are subject to change without notice. TI grants you permission to use these resources only for development of an application that uses the TI products described in the resource. Other reproduction and display of these resources is prohibited. No license is granted to any other TI intellectual property right or to any third party intellectual property right. TI disclaims responsibility for, and you will fully indemnify TI and its representatives against, any claims, damages, costs, losses, and liabilities arising out of your use of these resources.

TI’s products are provided subject to TI’s Terms of Sale or other applicable terms available either on ti.com or provided in conjunction with such TI products. TI’s provision of these resources does not expand or otherwise alter TI’s applicable warranties or warranty disclaimers for TI products.

TI objects to and rejects any additional or different terms you may have proposed.

Mailing Address: Texas Instruments, Post Office Box 655303, Dallas, Texas 75265
Copyright © 2022, Texas Instruments Incorporated