AM26LS32Ax, AM26LS33Ax Quadruple Differential Line Receivers

1 Features

- AM26LS32A Devices Meet or Exceed the Requirements of ANSI TIA/EIA-422-B, TIA/EIA-423-B, and ITU Recommendations V.10 and V.11
- AM26LS32A Devices Have ±7-V Common-Mode Range With ±200-mV Sensitivity
- AM26LS33A Devices Have ±15-V Common-Mode Range With ±500-mV Sensitivity
- Input Hysteresis 50 mV Typical
- Operate From a Single 5-V Supply
- Low-Power Schottky Circuitry
- 3-State Outputs
- Complementary Output-Enable Inputs
- Input Impedance 12 kΩ Minimum
- Open Input Fail-Safe

2 Applications

- High-Reliability Automotive Applications
- Factory Automation
- ATM and Cash Counters
- Smart Grids
- AC and Servo Motor Drives

3 Description

The AM26LS32Ax and AM26LS33Ax devices are quadruple differential line receivers for balanced and unbalanced digital data transmission. The enable function is common to all four receivers and offers a choice of active-high or active-low input. The 3-state outputs permit connection directly to a bus-organized system. Fail-safe design ensures that, if the inputs are open, the outputs always are high.

Compared to the AM26LS32 and the AM26LS33, the AM26LS32A and AM26LS33A incorporate an additional stage of amplification to improve sensitivity. The input impedance has been increased, resulting in less loading of the bus line. The additional stage has increased propagation delay; however, this does not affect interchangeability in most applications.

The AM26LS32AC and AM26LS33AC are characterized for operation from 0°C to 70°C. The AM26LS32AI is characterized for operation from –40°C to 85°C. The AM26LS32AM and AM26LS33AM are characterized for operation over the full military temperature range of –55°C to 125°C.

Device Information(1)

PART NUMBER	PACKAGE	BODY SIZE (NOM)
AM26LS3xAC AM26LS32AI	PDIP (16)	19.30 mm × 6.35 mm
	SOIC (16)	9.90 mm × 3.90 mm
AM26LS32AC	SO (16)	10.20 mm × 5.30 mm
	TSSOP (16)	5.00 mm × 4.40 mm
AM26LS3xAM	CDIP (16)	21.34 mm × 6.92 mm
	LCCC (20)	8.90 mm × 8.90 mm

(1) For all available packages, see the orderable addendum at the end of the data sheet.

Logic Diagram (Positive Logic)

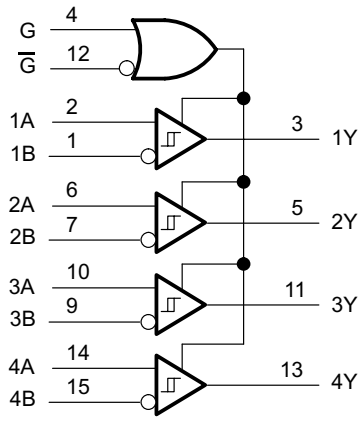

Copyright © 2016, Texas Instruments Incorporated

Pin numbers are for D, N, NS, or PW packages only.

An IMPORTANT NOTICE at the end of this data sheet addresses availability, warranty, changes, use in safety-critical applications, intellectual property matters and other important disclaimers. PRODUCTION DATA.

Table of Contents

1 Features ... 1
2 Applications ... 1
3 Description ... 1
4 Revision History ... 2
5 Pin Configuration and Functions ... 3
6 Specifications ... 4
6.1 Absolute Maximum Ratings ... 4
6.2 ESD Ratings ... 4
6.3 Recommended Operating Conditions ... 4
6.4 Thermal Information ... 5
6.5 Electrical Characteristics ... 5
6.6 Switching Characteristics ... 6
6.7 Dissipation Ratings ... 6
6.8 Typical Characteristics ... 7
7 Parameter Measurement Information ... 9
8 Detailed Description ... 11
8.1 Overview ... 11
8.2 Functional Block Diagram ... 11
8.3 Feature Description ... 11
8.4 Device Functional Modes ... 11
9 Application and Implementation ... 12
9.1 Application Information ... 12
9.2 Typical Application ... 12
10 Power Supply Recommendations ... 13
11 Layout ... 13
11.1 Layout Guidelines ... 13
11.2 Layout Example ... 14
12 Device and Documentation Support ... 15
12.1 Related Links ... 15
12.2 Receiving Notification of Documentation Updates 15
12.3 Community Resources ... 15
12.4 Trademarks ... 15
12.5 Electrostatic Discharge Caution ... 15
12.6 Glossary ... 15
13 Mechanical, Packaging, and Orderable Information ... 15

4 Revision History

NOTE: Page numbers for previous revisions may differ from page numbers in the current version.

Changes from Revision E (October 2007) to Revision F	Page
• Added *Applications* section, *ESD Ratings* table, *Feature Description* section, *Device Functional Modes*, *Application and Implementation* section, *Power Supply Recommendations* section, *Layout* section, *Device and Documentation Support* section, and *Mechanical, Packaging, and Orderable Information* section	1
• Changed $R_{\theta JA}$ values in the *Thermal Information* table: 73 to 75.7 for (D), 67 to 45.3 (N), 64 to 75.8 (NS), and 108 to 102.7 (PW)	5

Copyright © 1980–2016, Texas Instruments Incorporated

5 Pin Configuration and Functions

D, J, N, NS, and PW Package
16-Pin SOIC, CDIP, PDIP, SO, and TSSOP
Top View

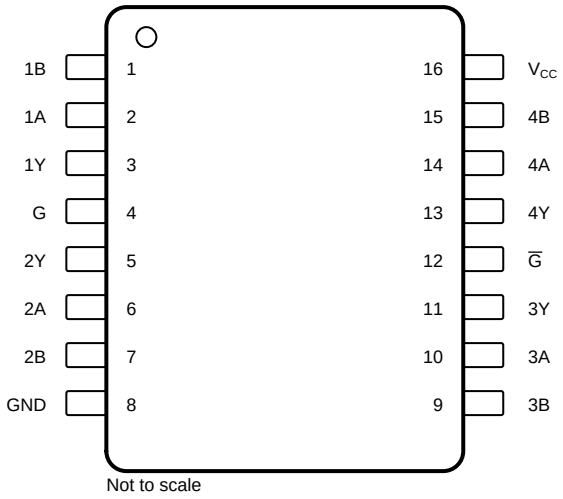

FK Package
20-Pin LCCC
Top View

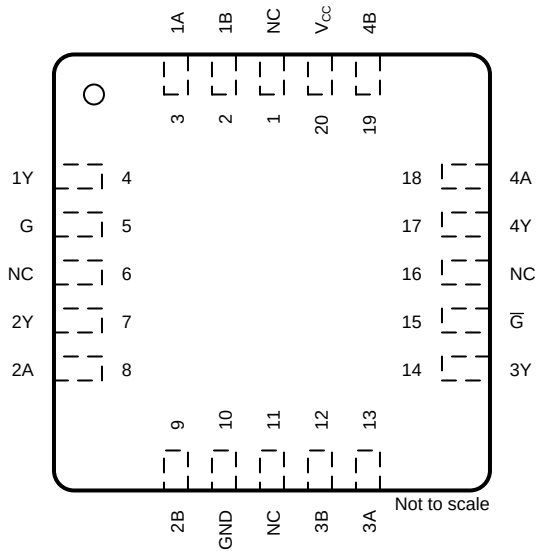

NC - No internal connection

Pin Functions

PIN			I/O	DESCRIPTION
NAME	SOIC, CDIP, PDIP, SO, TSSOP	LCCC		
1A	2	3	I	RS422/RS485 differential input (noninverting)
1B	1	2	I	RS422/RS485 differential input (inverting)
1Y	3	4	O	Logic level output
2A	6	8	I	RS422/RS485 differential input (noninverting)
2B	7	9	I	RS422/RS485 differential input (inverting)
2Y	5	7	O	Logic level output
3A	10	13	I	RS422/RS485 differential input (noninverting)
3B	9	12	I	RS422/RS485 differential input (inverting)
3Y	11	14	O	Logic level output
4A	14	18	I	RS422/RS485 differential input (noninverting)
4B	15	19	I	RS422/RS485 differential input (inverting)
4Y	13	17	O	Logic level output
$\overline{G}$	12	15	I	Active-Low select
G	4	5	I	Active-High select
GND	8	10	—	Ground
NC	—	1, 6, 11, 16	—	No internal connection
V_{CC}	16	20	—	Power supply

6 Specifications

6.1 Absolute Maximum Ratings

over operating free-air temperature range (unless otherwise noted)[1]

		MIN	MAX	UNIT
Supply voltage, V_{CC}[2]			7	V
Input voltage, V_I	Any differential input		±25	V
	Other inputs		7	
Differential input voltage, V_{ID}[3]			±25	V
Continuous total power dissipation		See *Dissipation Ratings*		
Case temperature, T_C, FK package (60 s)			260	°C
Lead temperature[4]	D or N package (10 s)		260	°C
	J package (60 s)		300	
Storage temperature, T_{stg}		–65	150	°C

(1) Stresses beyond those listed under *Absolute Maximum Ratings* may cause permanent damage to the device. These are stress ratings only, which do not imply functional operation of the device at these or any other conditions beyond those indicated under *Recommended Operating Conditions*. Exposure to absolute-maximum-rated conditions for extended periods may affect device reliability.
(2) All voltage values, except differential voltages, are with respect to the network ground terminal.
(3) Differential voltage values are at the noninverting (A) input terminals with respect to the inverting (B) input terminals.
(4) 1.6 mm (1/16 inch) from case

6.2 ESD Ratings

			VALUE	UNIT
$V_{(ESD)}$	Electrostatic discharge	Human-body model (HBM), per ANSI/ESDA/JEDEC JS-001[1]	±500	V
		Charged-device model (CDM), per JEDEC specification JESD22-C101[2]	±2000	

(1) JEDEC document JEP155 states that 500-V HBM allows safe manufacturing with a standard ESD control process.
(2) JEDEC document JEP157 states that 250-V CDM allows safe manufacturing with a standard ESD control process.

6.3 Recommended Operating Conditions

			MIN	NOM	MAX	UNIT
V_{CC}	Supply voltage	AM26LS32AC, AM26LS32AI, AM26LS33AC	4.75	5	5.25	V
		AM26LS32AM, AM26LS33AM	4.5	5	5.5	
V_{IH}	High-level input voltage		2			V
V_{IL}	Low-level input voltage				0.8	V
V_{IC}	Common-mode input voltage	AM26LS32A			±7	V
		AM26LS33A			±15	
I_{OH}	High-level output current				–440	µA
I_{OL}	Low-level output current				8	mA
T_A	Operating free-air temperature	AM26LS32AC, AM26LS33AC	0		70	°C
		AM26LS32AI	–40		85	
		AM26LS32AM, AM26LS33AM	–55		125	

Copyright © 1980–2016, Texas Instruments Incorporated

6.4 Thermal Information

THERMAL METRIC[1]		AM26LS3xAC, AM26LS32AI		AM26LS32AC		UNIT
		D (SOIC)	N (PDIP)	NS (SO)	PW (TSSOP)	
		16 PINS	16 PINS	16 PINS	16 PINS	
$R_{\theta JA}$	Junction-to-ambient thermal resistance	75.7	45.3	75.8	102.7	°C/W
$R_{\theta JC(top)}$	Junction-to-case (top) thermal resistance	35	32.7	32.9	37.8	°C/W
$R_{\theta JB}$	Junction-to-board thermal resistance	33.3	25.3	36.6	47.7	°C/W
ψ_{JT}	Junction-to-top characterization parameter	6.6	17.8	6	3	°C/W
ψ_{JB}	Junction-to-board characterization parameter	33	25.1	36.3	47.1	°C/W

(1) For more information about traditional and new thermal metrics, see the *Semiconductor and IC Package Thermal Metrics* application report.

6.5 Electrical Characteristics

over recommended ranges of V_{CC}, V_{IC}, and operating free-air temperature (unless otherwise noted)

PARAMETER		TEST CONDITIONS		MIN	TYP[1]	MAX	UNIT
V_{IT+}	Positive-going input threshold voltage	$V_O = V_{OH}$min, $I_{OH} = -440$ µA	AM26LS32A			0.2	V
			AM26LS33A			0.5	
V_{IT-}	Negative-going input threshold voltage	$V_O = 0.45$ V , $I_{OL} = 8$ mA	AM26LS32A	–0.2[2]			V
			AM26LS33A	–0.5[2]			
V_{hys}	Hysteresis voltage ($V_{IT+} - V_{IT-}$)				50		mV
V_{IK}	Enable-input clamp voltage	V_{CC} = MIN, $I_I = -18$ mA				–1.5	V
V_{OH}	High-level output voltage	V_{CC} = MIN, $V_{ID} = 1$ V, $V_{I(G)} = 0.8$ V, $I_{OH} = -440$ µA	AM26LS32AC, AM26LS33AC	2.7			V
			AM26LS32AM, AM26LS32AI, AM26LS33AM	2.5			
V_{OL}	Low-level output voltage	V_{CC} = MIN, $V_{ID} = -1$ V, $V_{I(G)} = 0.8$ V	I_{OL}= 4 mA			0.4	V
			I_{OL}= 8 mA			0.45	
I_{OZ}	Off-state (high-impedance state) output current	V_{CC} = MAX	$V_O = 2.4$ V			20	µA
			$V_O = 0.4$ V			–20	
I_I	Line input current	$V_I = 15$ V, other input at –10 V to 15 V				1.2	mA
		$V_I = -15$ V, other input at –15 V to 10 V				–1.7	
$I_{I(EN)}$	Enable input current	$V_I = 5.5$ V				100	µA
I_H	High-level enable current	$V_I = 2.7$ V				20	µA
I_L	Low-level enable current	$V_I = 0.4$ V				–0.36	mA
r_i	Input resistance	$V_{IC} = -15$ V to 15 V, one input to ac ground		12	15		kΩ
I_{OS}	Short-circuit output current[3]	V_{CC} = MAX		–15		–85	mA
I_{CC}	Supply current	V_{CC} = MAX, all outputs disabled			52	70	mA

(1) All typical values are at $V_{CC} = 5$ V, $T_A = 25$°C, and $V_{IC} = 0$.
(2) The algebraic convention, in which the less positive (more negative) limit is designated as minimum, is used in this data sheet for threshold levels only.
(3) Not more than one output must be shorted to ground at a time, and duration of the short circuit must not exceed one second.

Copyright © 1980–2016, Texas Instruments Incorporated

6.6 Switching Characteristics

C_L = 15 pF, V_{CC} = 5 V, and T_A = 25°C (see *Parameter Measurement Information*; unless otherwise noted)

PARAMETER		MIN	TYP (1)	MAX	UNIT
t_{PLH}	Propagation delay time, low-to-high-level output		20	35	ns
t_{PHL}	Propagation delay time, high-to-low-level output		22	35	ns
t_{PZH}	Output enable time to high level		17	22	ns
t_{PZL}	Output enable time to low level		20	25	ns
t_{PHZ}	Output disable time from high level		21	30	ns
t_{PLZ}	Output disable time from low level		30	40	ns

(1) All typical values are at V_{CC} = 5 V, T_A = 25°C, and V_{IC} = 0.

6.7 Dissipation Ratings

PACKAGE	$T_A \leq 25°C$ POWER RATING	DERATION FACTOR ABOVE T_A = 25°C	T_A = 70°C POWER RATING	T_A = 125°C POWER RATING
FK	1375 mW	11 mW/°C	880 mW	275 mW
J	1375 mW	11 mW/°C	880 mW	275 mW

Copyright © 1980–2016, Texas Instruments Incorporated

6.8 Typical Characteristics

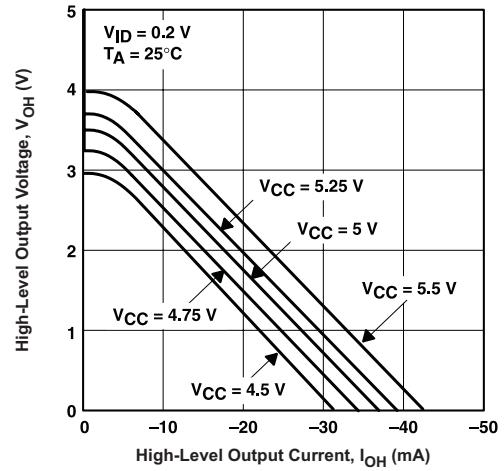

† V_{CC} = 5.5 V and V_{CC} = 4.5 V applies to M-suffix devices only.

Figure 1. High-Level Output Voltage vs High-Level Output Current

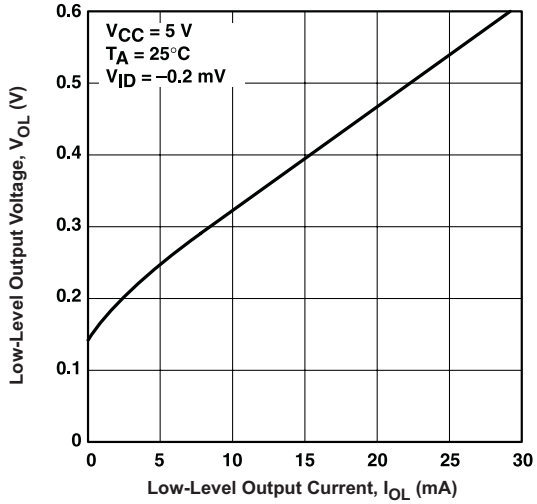

Figure 2. Low-Level Output Voltage vs Low-Level Output Current

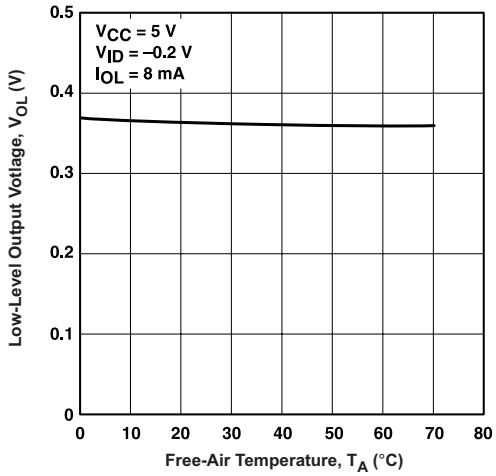

Figure 3. Low-Level Output Voltage vs Free-Air Temperature

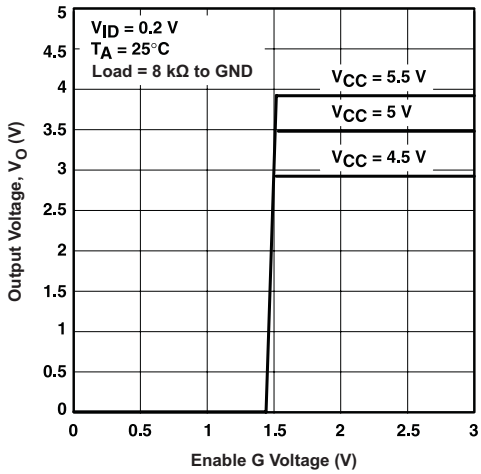

Figure 4. Output Voltage vs Enable G Voltage

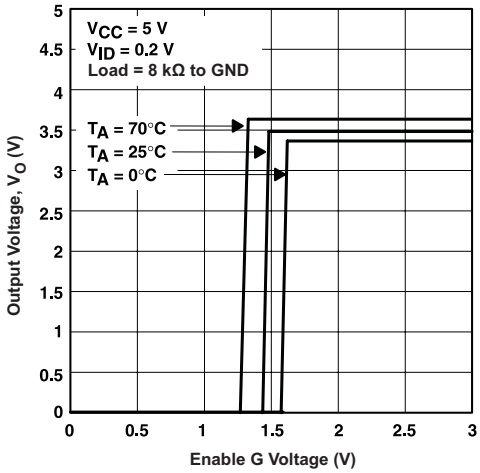

Figure 5. Output Voltage vs Enable G Voltage

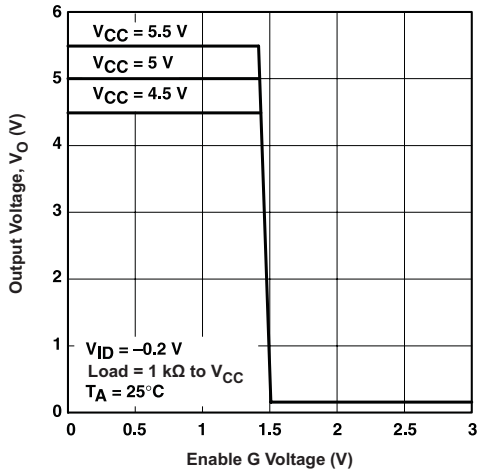

Figure 6. Output Voltage vs Enable G Voltage

Copyright © 1980–2016, Texas Instruments Incorporated

Typical Characteristics (continued)

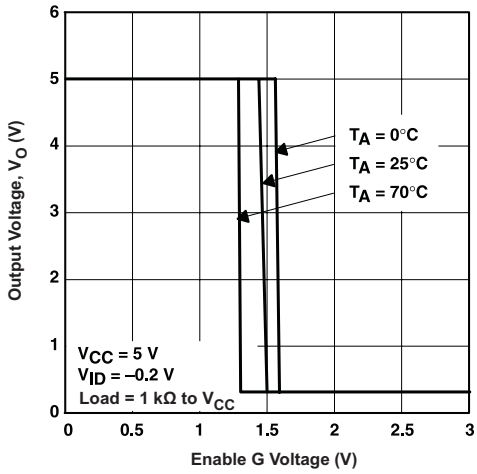

Figure 7. Output Voltage vs Enable G Voltage

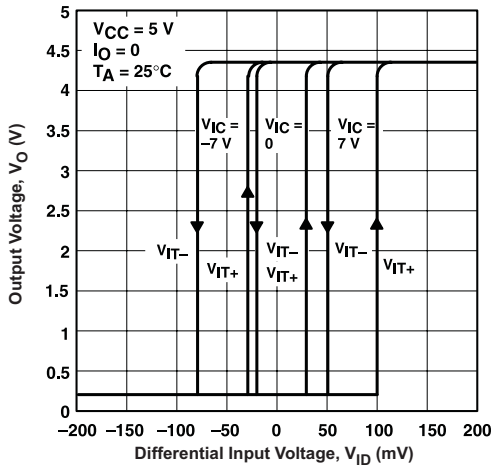

Figure 8. AM26LS32A Output Voltage vs Differential Input Voltage

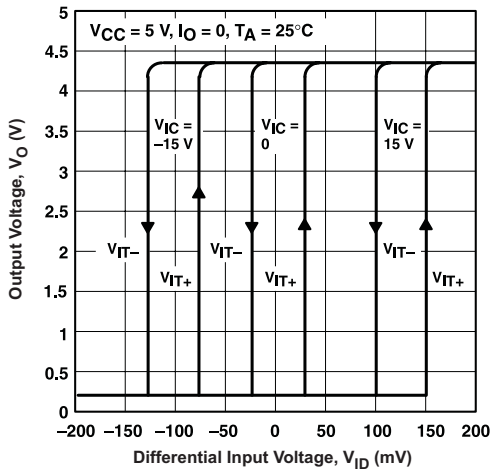

Figure 9. AM26LS33A Output Voltage vs Differential Input Voltage

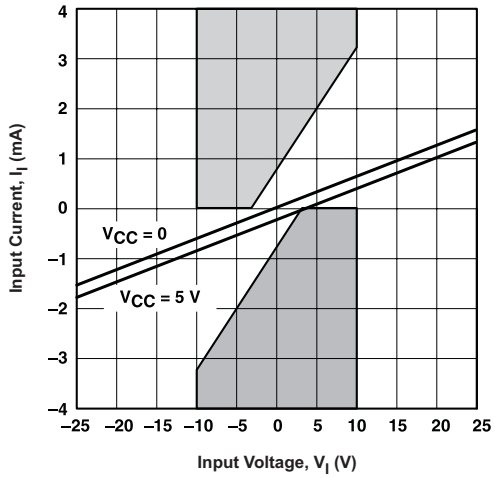

The unshaded area shows requirements of paragraph 4.2.1 of ANSI Standards EIA/TIA-422-B and EIA/TIA-423-B.

Figure 10. Input Current vs Input Voltage

Copyright © 1980–2016, Texas Instruments Incorporated

7 Parameter Measurement Information

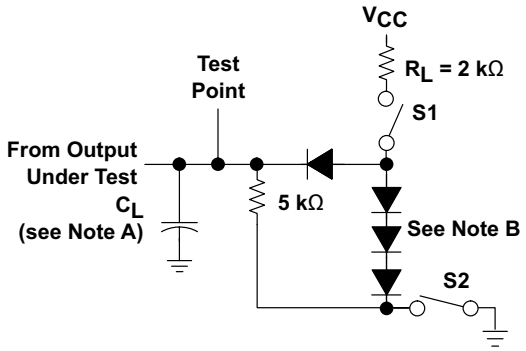

Figure 11. Test Circuit

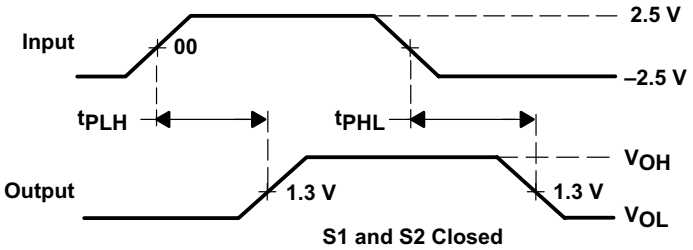

Figure 12. Voltage Waveforms For t_{PLH}, t_{PHL}

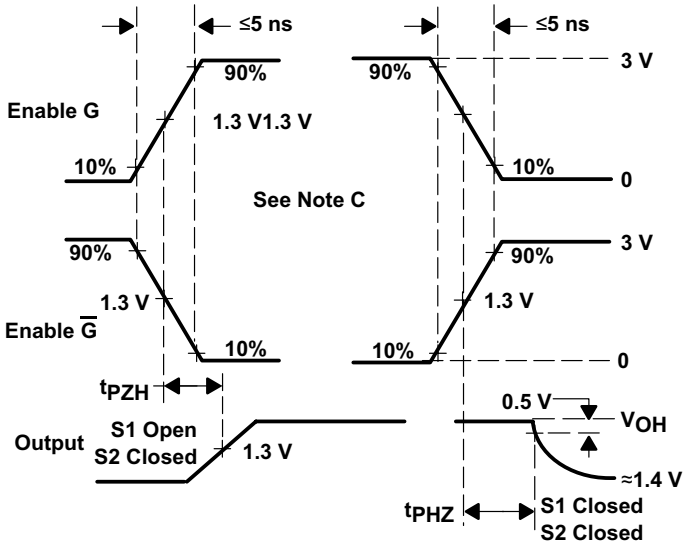

Figure 13. Voltage Waveforms For t_{PHZ}, t_{PZH}

Parameter Measurement Information (continued)

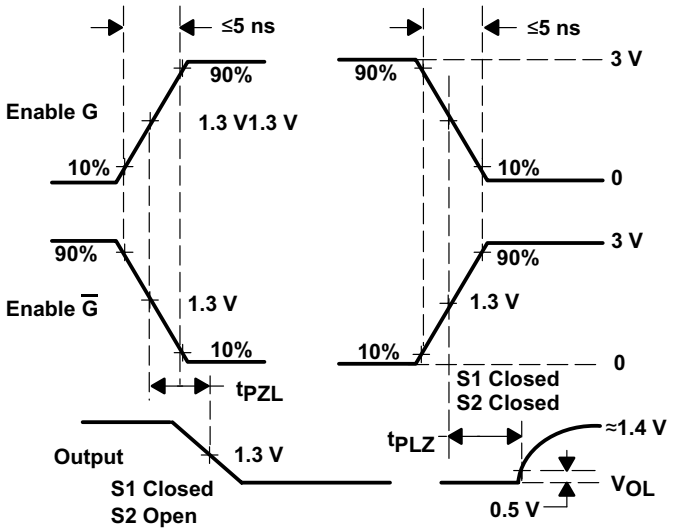

A. CL includes probe and jig capacitance.

B. All diodes are 1N3064 or equivalent.

C. Enable G is tested with $\overline{G}$ high, $\overline{G}$ is tested with G low.

Figure 14. Voltage Waveforms For t_{PLZ}, t_{PZL}

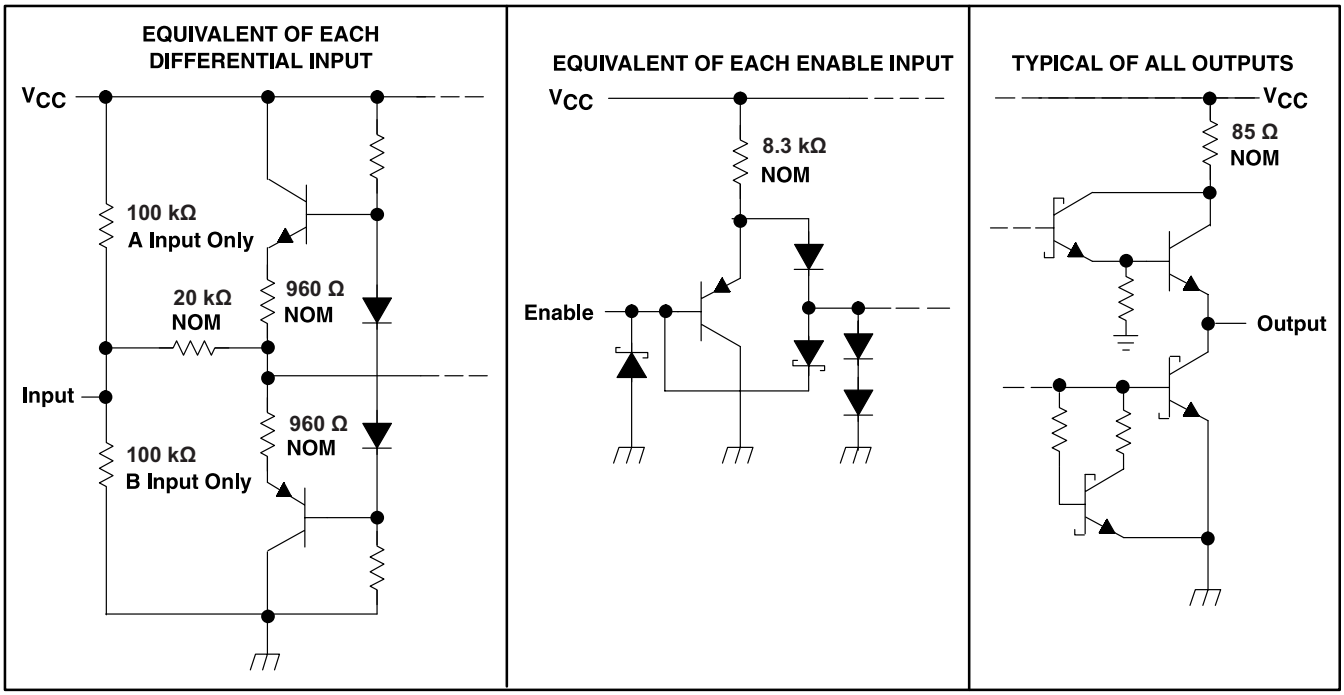

Copyright © 2016, Texas Instruments Incorporated

Figure 15. Schematics of Inputs and Outputs

Copyright © 1980–2016, Texas Instruments Incorporated

8 Detailed Description

8.1 Overview

The AM26LS32 is a quadruple-differential line receiver that meets the necessary requirements for NSI TIA/EIA-422-B, TIA/EIA-423-B, and ITU Recommendation V.10 and V.11. This device allows a low-power or low-voltage MCU to interface with heavy machinery, subsystems, and other devices through long wires of up to 1000 m, giving any design a reliable and easy-to-use connection. As any RS422 interface, the AM26LS32 works in a differential voltage range, which enables very good signal integrity.

8.2 Functional Block Diagram

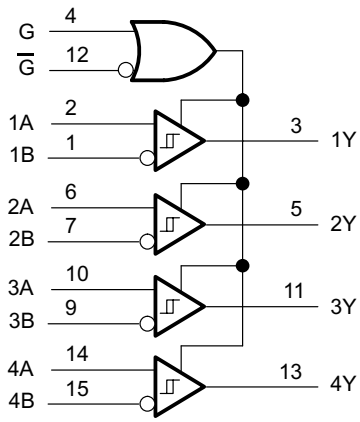

Copyright © 2016, Texas Instruments Incorporated

Figure 16. Logic Diagram (Positive Logic)

8.3 Feature Description

The device can be configured using the G and $\overline{G}$ logic inputs to select receiver output. The high voltage or logic 1 on the G pin allows the device to operate on an active-high, and having a low voltage or logic 0 on the G enables active low operation. These are simple ways to configure the logic to match that of the receiving or transmitting controller or microprocessor.

8.4 Device Functional Modes

The receivers implemented in these RS422 devices can be configured using the G and $\overline{G}$ logic pins to be enabled or disabled. This allows users to ignore or filter out transmissions as desired.

Table 1. Function Table, Each Receiver

DIFFERENTIAL A–B	ENABLES (1)		OUTPUT (1) Y
	G	$\overline{G}$	
$V_{ID} \geq V_{IT+}$	H	X	H
	X	L	H
$V_{IT-} \leq V_{ID} \leq V_{IT+}$	H	X	?
	X	L	?
$V_{ID} \leq V_{IT-}$	H	X	L
	X	L	L
X	L	H	Z
Open	H	X	H
	X	L	H

(1) H = High level, L = Low level, X = Irrelevant, Z = High impedance (off), ? = Indeterminate

9 Application and Implementation

NOTE

Information in the following applications sections is not part of the TI component specification, and TI does not warrant its accuracy or completeness. TI's customers are responsible for determining suitability of components for their purposes. Customers should validate and test their design implementation to confirm system functionality.

9.1 Application Information

When using AM26LS32A as a receiver, the AM26LS31AC can allow multiple AM26LS32As to be used causing an increase in the amount of outputs.

9.2 Typical Application

Figure 17 shows a configuration with no termination. Although reflections are present at the receiver inputs at a data signaling rate of 200 kbps with no termination, the RS-422-compliant receiver reads only the input differential voltage and produces a clean signal at the output.

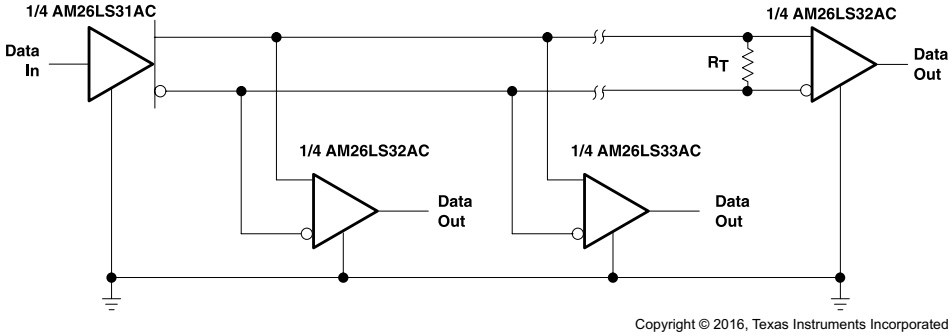

†R_T equals the characteristic impedance of the line.

Figure 17. Application Diagram

9.2.1 Design Requirements

Resistor and capacitor (if used) termination values are shown for each laboratory experiment, but vary from system to system. For example, the termination resistor, R_T, must be within 20% of the characteristic impedance, Z_O, of the cable and can vary from about 80 Ω to 120 Ω.

9.2.2 Detailed Design Procedure

Add a V_{CC} bypass capacitor (0.1 µF or more). Either enable (G pin) input can turn on the receivers, so connect the desired enable to a compatible logic line output. The other enable input must be tied to the inactive state supply rail. If the receivers must always be active, then connect both enables to the supply rail such that at least one is set to an active-state rail. V_{CC} must be 5 V within 10% and logic inputs must provide TTL-compatible voltage levels A & B Inputs can lead to an external connector or can be left unconnected. The last receiver on a cable requires termination, either on-board or use as an external resistor. Unused Y outputs can be left unconnected.

Copyright © 1980–2016, Texas Instruments Incorporated

Typical Application (continued)

9.2.3 Application Curve

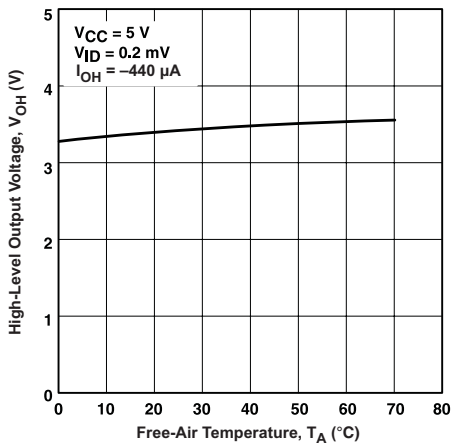

Figure 18. High-Level Output Voltage vs Free-Air Temperature

10 Power Supply Recommendations

Place 0.1-µF bypass capacitors close to the power-supply pins to reduce errors coupling in from noisy or high-impedance power supplies.

11 Layout

11.1 Layout Guidelines

For best operational performance of the device, use good PCB layout practices including:

- Noise can propagate into analog circuitry through the power pins of the circuit as a whole, as well as the operational amplifier. Bypass capacitors are used to reduce the coupled noise by providing low impedance power sources local to the analog circuitry.
- Connect low-ESR, 0.1-µF ceramic bypass capacitors between each supply pin and ground, placed as close to the device as possible. A single bypass capacitor from V+ to ground is applicable for single supply applications.
- Separate grounding for analog and digital portions of circuitry is one of the simplest and most-effective methods of noise suppression. One or more layers on multilayer PCBs are usually devoted to ground planes. A ground plane helps distribute heat and reduces EMI noise pickup. Make sure to physically separate digital and analog grounds, paying attention to the flow of the ground current.
- To reduce parasitic coupling, run the input traces as far away from the supply or output traces as possible. If it is not possible to keep them separate, it is much better to cross the sensitive trace perpendicular as opposed to in parallel with the noisy trace.
- Place the external components as close to the device as possible. Keeping RF and RG close to the inverting input minimizes parasitic capacitance.
- Keep the length of input traces as short as possible. Always remember that the input traces are the most sensitive part of the circuit.
- Consider a driven, low-impedance guard ring around the critical traces. A guard ring can significantly reduce leakage currents from nearby traces that are at different potentials.

Copyright © 1980–2016, Texas Instruments Incorporated

11.2 Layout Example

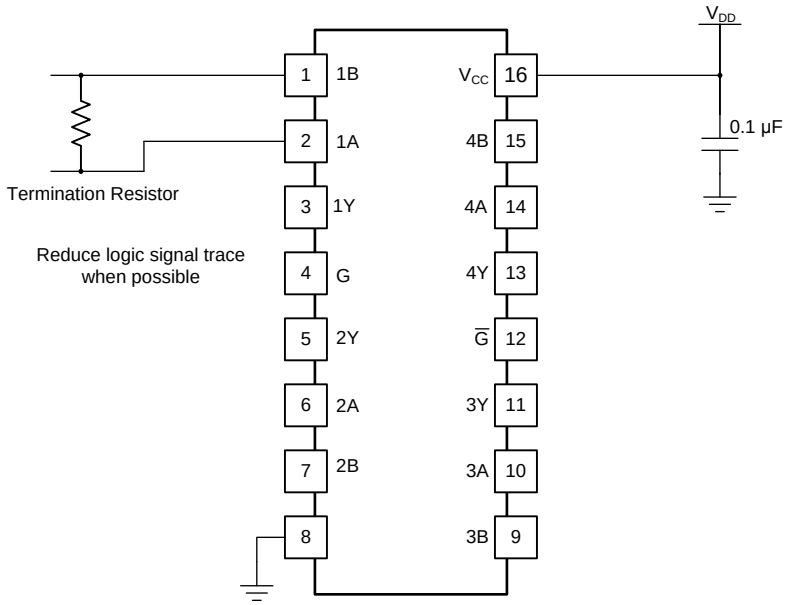

Figure 19. Layout with PCB Recommendations

Copyright © 1980–2016, Texas Instruments Incorporated

12 Device and Documentation Support

12.1 Related Links

The table below lists quick access links. Categories include technical documents, support and community resources, tools and software, and quick access to sample or buy.

Table 2. Related Links

PARTS	PRODUCT FOLDER	SAMPLE & BUY	TECHNICAL DOCUMENTS	TOOLS & SOFTWARE	SUPPORT & COMMUNITY
AM26LS32AC	Click here	Click here	Click here	Click here	Click here
AM26LS32AI	Click here	Click here	Click here	Click here	Click here
AM26LS32AM	Click here	Click here	Click here	Click here	Click here
AM26LS33AC	Click here	Click here	Click here	Click here	Click here
AM26LS33AM	Click here	Click here	Click here	Click here	Click here

12.2 Receiving Notification of Documentation Updates

To receive notification of documentation updates, navigate to the device product folder on ti.com. In the upper right corner, click on *Alert me* to register and receive a weekly digest of any product information that has changed. For change details, review the revision history included in any revised document.

12.3 Community Resources

The following links connect to TI community resources. Linked contents are provided "AS IS" by the respective contributors. They do not constitute TI specifications and do not necessarily reflect TI's views; see TI's Terms of Use.

TI E2E™ Online Community ***TI's Engineer-to-Engineer (E2E) Community.*** Created to foster collaboration among engineers. At e2e.ti.com, you can ask questions, share knowledge, explore ideas and help solve problems with fellow engineers.

Design Support ***TI's Design Support*** Quickly find helpful E2E forums along with design support tools and contact information for technical support.

12.4 Trademarks

E2E is a trademark of Texas Instruments.
All other trademarks are the property of their respective owners.

12.5 Electrostatic Discharge Caution

These devices have limited built-in ESD protection. The leads should be shorted together or the device placed in conductive foam during storage or handling to prevent electrostatic damage to the MOS gates.

12.6 Glossary

SLYZ022 — *TI Glossary*.

This glossary lists and explains terms, acronyms, and definitions.

13 Mechanical, Packaging, and Orderable Information

The following pages include mechanical, packaging, and orderable information. This information is the most current data available for the designated devices. This data is subject to change without notice and revision of this document. For browser-based versions of this data sheet, refer to the left-hand navigation.

PACKAGING INFORMATION

Orderable Device	Status (1)	Package Type	Package Drawing	Pins	Package Qty	Eco Plan (2)	Lead finish/ Ball material (6)	MSL Peak Temp (3)	Op Temp (°C)	Device Marking (4/5)	Samples
5962-7802003M2A	ACTIVE	LCCC	FK	20	1	Non-RoHS & Green	SNPB	N / A for Pkg Type	-55 to 125	5962-7802003M2A AM26LS 32AMFKB	Samples
5962-7802003MEA	ACTIVE	CDIP	J	16	1	Non-RoHS & Green	SNPB	N / A for Pkg Type	-55 to 125	5962-7802003ME A AM26LS32AMJB	Samples
5962-7802003MFA	ACTIVE	CFP	W	16	1	Non-RoHS & Green	SNPB	N / A for Pkg Type	-55 to 125	5962-7802003MF A AM26LS32AMWB	Samples
5962-7802004M2A	ACTIVE	LCCC	FK	20	1	Non-RoHS & Green	SNPB	N / A for Pkg Type	-55 to 125	5962-7802004M2A AM26LS 33AMFKB	Samples
5962-7802004MEA	ACTIVE	CDIP	J	16	1	Non-RoHS & Green	SNPB	N / A for Pkg Type	-55 to 125	5962-7802004ME A AM26LS33AMJB	Samples
5962-7802004MFA	ACTIVE	CFP	W	16	1	Non-RoHS & Green	SNPB	N / A for Pkg Type	-55 to 125	5962-7802004MF A AM26LS33AMWB	Samples
AM26LS32ACD	ACTIVE	SOIC	D	16	40	RoHS & Green	NIPDAU	Level-1-260C-UNLIM	0 to 70	26LS32AC	Samples
AM26LS32ACDE4	ACTIVE	SOIC	D	16	40	RoHS & Green	NIPDAU	Level-1-260C-UNLIM	0 to 70	26LS32AC	Samples
AM26LS32ACDG4	ACTIVE	SOIC	D	16	40	RoHS & Green	NIPDAU	Level-1-260C-UNLIM	0 to 70	26LS32AC	Samples
AM26LS32ACDR	ACTIVE	SOIC	D	16	2500	RoHS & Green	NIPDAU	Level-1-260C-UNLIM	0 to 70	26LS32AC	Samples
AM26LS32ACDRE4	ACTIVE	SOIC	D	16	2500	RoHS & Green	NIPDAU	Level-1-260C-UNLIM	0 to 70	26LS32AC	Samples
AM26LS32ACDRG4	ACTIVE	SOIC	D	16	2500	RoHS & Green	NIPDAU	Level-1-260C-UNLIM	0 to 70	26LS32AC	Samples
AM26LS32ACN	ACTIVE	PDIP	N	16	25	RoHS & Green	NIPDAU	N / A for Pkg Type	0 to 70	AM26LS32ACN	Samples
AM26LS32ACNSR	ACTIVE	SO	NS	16	2000	RoHS & Green	NIPDAU	Level-1-260C-UNLIM	0 to 70	26LS32A	Samples
AM26LS32ACNSRG4	ACTIVE	SO	NS	16	2000	RoHS & Green	NIPDAU	Level-1-260C-UNLIM	0 to 70	26LS32A	Samples

Orderable Device	Status (1)	Package Type	Package Drawing	Pins	Package Qty	Eco Plan (2)	Lead finish/ Ball material (6)	MSL Peak Temp (3)	Op Temp (°C)	Device Marking (4/5)	Samples
AM26LS32ACPW	ACTIVE	TSSOP	PW	16	90	RoHS & Green	NIPDAU	Level-1-260C-UNLIM	0 to 70	SA32A	Samples
AM26LS32ACPWE4	ACTIVE	TSSOP	PW	16	90	RoHS & Green	NIPDAU	Level-1-260C-UNLIM	0 to 70	SA32A	Samples
AM26LS32ACPWR	ACTIVE	TSSOP	PW	16	2000	RoHS & Green	NIPDAU	Level-1-260C-UNLIM	0 to 70	SA32A	Samples
AM26LS32ACPWRE4	ACTIVE	TSSOP	PW	16	2000	RoHS & Green	NIPDAU	Level-1-260C-UNLIM	0 to 70	SA32A	Samples
AM26LS32AID	ACTIVE	SOIC	D	16	40	RoHS & Green	NIPDAU	Level-1-260C-UNLIM	-40 to 85	26LS32AI	Samples
AM26LS32AIDE4	ACTIVE	SOIC	D	16	40	RoHS & Green	NIPDAU	Level-1-260C-UNLIM	-40 to 85	26LS32AI	Samples
AM26LS32AIDG4	ACTIVE	SOIC	D	16	40	RoHS & Green	NIPDAU	Level-1-260C-UNLIM	-40 to 85	26LS32AI	Samples
AM26LS32AIDR	ACTIVE	SOIC	D	16	2500	RoHS & Green	NIPDAU	Level-1-260C-UNLIM	-40 to 85	26LS32AI	Samples
AM26LS32AIDRG4	ACTIVE	SOIC	D	16	2500	RoHS & Green	NIPDAU	Level-1-260C-UNLIM	-40 to 85	26LS32AI	Samples
AM26LS32AIN	ACTIVE	PDIP	N	16	25	RoHS & Green	NIPDAU	N / A for Pkg Type	-40 to 85	AM26LS32AIN	Samples
AM26LS32AMFKB	ACTIVE	LCCC	FK	20	1	Non-RoHS & Green	SNPB	N / A for Pkg Type	-55 to 125	5962-7802003M2A AM26LS 32AMFKB	Samples
AM26LS32AMJ	ACTIVE	CDIP	J	16	1	Non-RoHS & Green	SNPB	N / A for Pkg Type	-55 to 125	AM26LS32AMJ	Samples
AM26LS32AMJB	ACTIVE	CDIP	J	16	1	Non-RoHS & Green	SNPB	N / A for Pkg Type	-55 to 125	5962-7802003ME A AM26LS32AMJB	Samples
AM26LS32AMWB	ACTIVE	CFP	W	16	1	Non-RoHS & Green	SNPB	N / A for Pkg Type	-55 to 125	5962-7802003MF A AM26LS32AMWB	Samples
AM26LS33ACD	ACTIVE	SOIC	D	16	40	RoHS & Green	NIPDAU	Level-1-260C-UNLIM	0 to 70	26LS33AC	Samples
AM26LS33ACDG4	ACTIVE	SOIC	D	16	40	RoHS & Green	NIPDAU	Level-1-260C-UNLIM	0 to 70	26LS33AC	Samples
AM26LS33ACDR	ACTIVE	SOIC	D	16	2500	RoHS & Green	NIPDAU	Level-1-260C-UNLIM	0 to 70	26LS33AC	Samples
AM26LS33ACDRE4	ACTIVE	SOIC	D	16	2500	RoHS & Green	NIPDAU	Level-1-260C-UNLIM	0 to 70	26LS33AC	Samples

Orderable Device	Status (1)	Package Type	Package Drawing	Pins	Package Qty	Eco Plan (2)	Lead finish/ Ball material (6)	MSL Peak Temp (3)	Op Temp (°C)	Device Marking (4/5)	Samples
AM26LS33ACN	ACTIVE	PDIP	N	16	25	RoHS & Green	NIPDAU	N / A for Pkg Type	0 to 70	AM26LS33ACN	Samples
AM26LS33AMFKB	ACTIVE	LCCC	FK	20	1	Non-RoHS & Green	SNPB	N / A for Pkg Type	-55 to 125	5962-7802004M2A AM26LS 33AMFKB	Samples
AM26LS33AMJ	ACTIVE	CDIP	J	16	1	Non-RoHS & Green	SNPB	N / A for Pkg Type	-55 to 125	AM26LS33AMJ	Samples
AM26LS33AMJB	ACTIVE	CDIP	J	16	1	Non-RoHS & Green	SNPB	N / A for Pkg Type	-55 to 125	5962-7802004ME A AM26LS33AMJB	Samples
AM26LS33AMWB	ACTIVE	CFP	W	16	1	Non-RoHS & Green	SNPB	N / A for Pkg Type	-55 to 125	5962-7802004MF A AM26LS33AMWB	Samples

(1) The marketing status values are defined as follows:
ACTIVE: Product device recommended for new designs.
LIFEBUY: TI has announced that the device will be discontinued, and a lifetime-buy period is in effect.
NRND: Not recommended for new designs. Device is in production to support existing customers, but TI does not recommend using this part in a new design.
PREVIEW: Device has been announced but is not in production. Samples may or may not be available.
OBSOLETE: TI has discontinued the production of the device.

(2) **RoHS:** TI defines "RoHS" to mean semiconductor products that are compliant with the current EU RoHS requirements for all 10 RoHS substances, including the requirement that RoHS substance do not exceed 0.1% by weight in homogeneous materials. Where designed to be soldered at high temperatures, "RoHS" products are suitable for use in specified lead-free processes. TI may reference these types of products as "Pb-Free".
RoHS Exempt: TI defines "RoHS Exempt" to mean products that contain lead but are compliant with EU RoHS pursuant to a specific EU RoHS exemption.
Green: TI defines "Green" to mean the content of Chlorine (Cl) and Bromine (Br) based flame retardants meet JS709B low halogen requirements of <=1000ppm threshold. Antimony trioxide based flame retardants must also meet the <=1000ppm threshold requirement.

(3) MSL, Peak Temp. - The Moisture Sensitivity Level rating according to the JEDEC industry standard classifications, and peak solder temperature.

(4) There may be additional marking, which relates to the logo, the lot trace code information, or the environmental category on the device.

(5) Multiple Device Markings will be inside parentheses. Only one Device Marking contained in parentheses and separated by a "~" will appear on a device. If a line is indented then it is a continuation of the previous line and the two combined represent the entire Device Marking for that device.

(6) Lead finish/Ball material - Orderable Devices may have multiple material finish options. Finish options are separated by a vertical ruled line. Lead finish/Ball material values may wrap to two lines if the finish value exceeds the maximum column width.

Important Information and Disclaimer: The information provided on this page represents TI's knowledge and belief as of the date that it is provided. TI bases its knowledge and belief on information provided by third parties, and makes no representation or warranty as to the accuracy of such information. Efforts are underway to better integrate information from third parties. TI has taken and continues to take reasonable steps to provide representative and accurate information but may not have conducted destructive testing or chemical analysis on incoming materials and chemicals. TI and TI suppliers consider certain information to be proprietary, and thus CAS numbers and other limited information may not be available for release.

In no event shall TI's liability arising out of such information exceed the total purchase price of the TI part(s) at issue in this document sold by TI to Customer on an annual basis.

OTHER QUALIFIED VERSIONS OF AM26LS32A, AM26LS32AM, AM26LS33A, AM26LS33AM :

- Catalog : AM26LS32A, AM26LS33A
- Military : AM26LS32AM, AM26LS33AM
- Space : AM26LS33A-SP, AM26LS33A-SP

NOTE: Qualified Version Definitions:

- Catalog - TI's standard catalog product
- Military - QML certified for Military and Defense Applications
- Space - Radiation tolerant, ceramic packaging and qualified for use in Space-based application

TAPE AND REEL INFORMATION

REEL DIMENSIONS

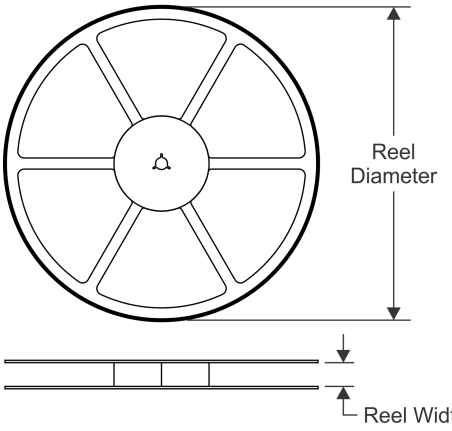

TAPE DIMENSIONS

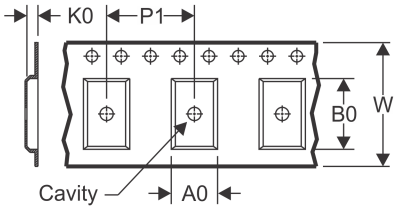

A0	Dimension designed to accommodate the component width
B0	Dimension designed to accommodate the component length
K0	Dimension designed to accommodate the component thickness
W	Overall width of the carrier tape
P1	Pitch between successive cavity centers

QUADRANT ASSIGNMENTS FOR PIN 1 ORIENTATION IN TAPE

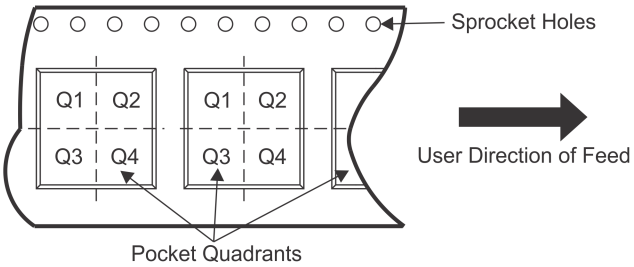

*All dimensions are nominal

Device	Package Type	Package Drawing	Pins	SPQ	Reel Diameter (mm)	Reel Width W1 (mm)	A0 (mm)	B0 (mm)	K0 (mm)	P1 (mm)	W (mm)	Pin1 Quadrant
AM26LS32ACDR	SOIC	D	16	2500	330.0	16.4	6.5	10.3	2.1	8.0	16.0	Q1
AM26LS32ACNSR	SO	NS	16	2000	330.0	16.4	8.2	10.5	2.5	12.0	16.0	Q1
AM26LS32ACPWR	TSSOP	PW	16	2000	330.0	12.4	6.9	5.6	1.6	8.0	12.0	Q1
AM26LS32AIDR	SOIC	D	16	2500	330.0	16.4	6.5	10.3	2.1	8.0	16.0	Q1
AM26LS33ACDR	SOIC	D	16	2500	330.0	16.4	6.5	10.3	2.1	8.0	16.0	Q1

TAPE AND REEL BOX DIMENSIONS

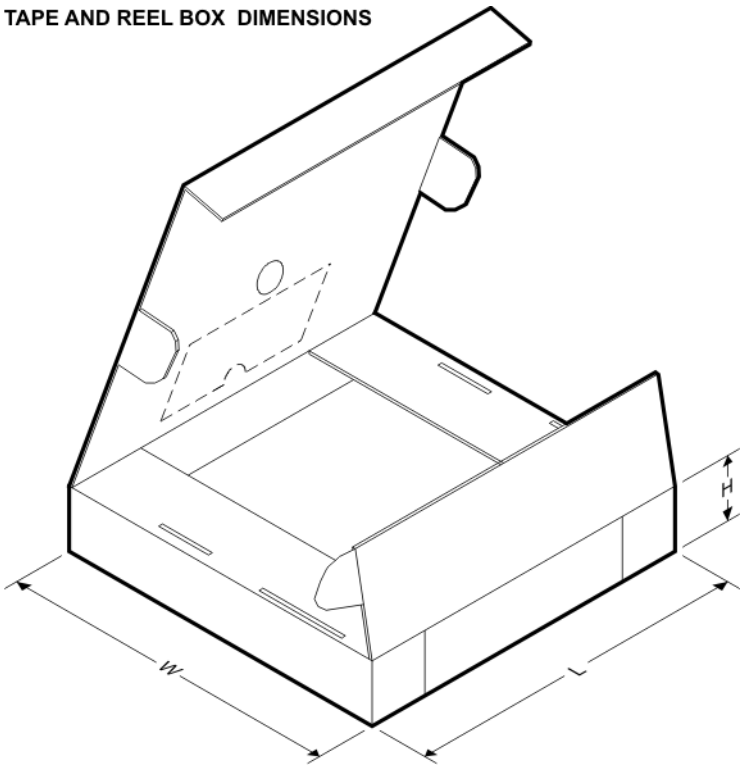

*All dimensions are nominal

Device	Package Type	Package Drawing	Pins	SPQ	Length (mm)	Width (mm)	Height (mm)
AM26LS32ACDR	SOIC	D	16	2500	340.5	336.1	32.0
AM26LS32ACNSR	SO	NS	16	2000	367.0	367.0	38.0
AM26LS32ACPWR	TSSOP	PW	16	2000	367.0	367.0	35.0
AM26LS32AIDR	SOIC	D	16	2500	340.5	336.1	32.0
AM26LS33ACDR	SOIC	D	16	2500	340.5	336.1	32.0

TUBE

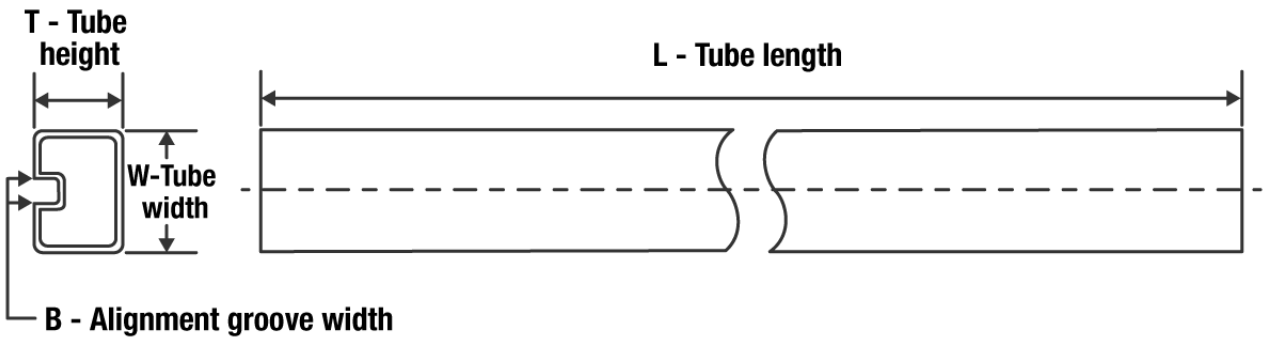

*All dimensions are nominal

Device	Package Name	Package Type	Pins	SPQ	L (mm)	W (mm)	T (µm)	B (mm)
5962-7802003M2A	FK	LCCC	20	1	506.98	12.06	2030	NA
5962-7802003MFA	W	CFP	16	1	506.98	26.16	6220	NA
5962-7802004M2A	FK	LCCC	20	1	506.98	12.06	2030	NA
5962-7802004MFA	W	CFP	16	1	506.98	26.16	6220	NA
AM26LS32ACD	D	SOIC	16	40	507	8	3940	4.32
AM26LS32ACD	D	SOIC	16	40	506.6	8	3940	4.32
AM26LS32ACDE4	D	SOIC	16	40	507	8	3940	4.32
AM26LS32ACDE4	D	SOIC	16	40	506.6	8	3940	4.32
AM26LS32ACDG4	D	SOIC	16	40	507	8	3940	4.32
AM26LS32ACDG4	D	SOIC	16	40	506.6	8	3940	4.32
AM26LS32ACN	N	PDIP	16	25	506	13.97	11230	4.32
AM26LS32ACPW	PW	TSSOP	16	90	530	10.2	3600	3.5
AM26LS32ACPWE4	PW	TSSOP	16	90	530	10.2	3600	3.5
AM26LS32AID	D	SOIC	16	40	507	8	3940	4.32
AM26LS32AIDE4	D	SOIC	16	40	507	8	3940	4.32
AM26LS32AIDG4	D	SOIC	16	40	507	8	3940	4.32
AM26LS32AIN	N	PDIP	16	25	506	13.97	11230	4.32
AM26LS32AMFKB	FK	LCCC	20	1	506.98	12.06	2030	NA
AM26LS32AMWB	W	CFP	16	1	506.98	26.16	6220	NA
AM26LS33ACD	D	SOIC	16	40	507	8	3940	4.32
AM26LS33ACDG4	D	SOIC	16	40	507	8	3940	4.32
AM26LS33ACN	N	PDIP	16	25	506	13.97	11230	4.32
AM26LS33AMFKB	FK	LCCC	20	1	506.98	12.06	2030	NA
AM26LS33AMWB	W	CFP	16	1	506.98	26.16	6220	NA

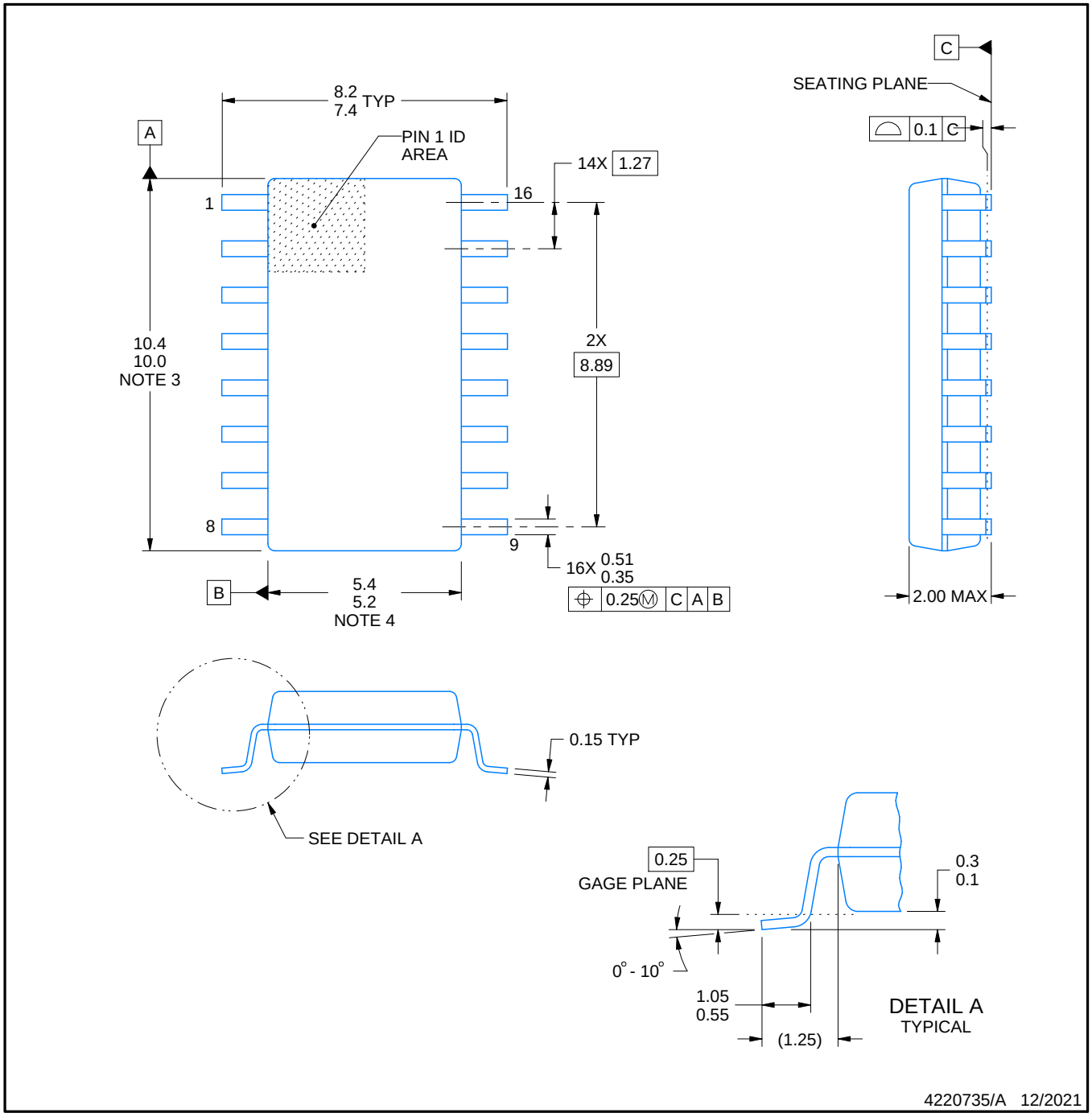

NOTES:

1. All linear dimensions are in millimeters. Dimensions in parenthesis are for reference only. Dimensioning and tolerancing per ASME Y14.5M.
2. This drawing is subject to change without notice.
3. This dimension does not include mold flash, protrusions, or gate burrs. Mold flash, protrusions, or gate burrs shall not exceed 0.15 mm, per side.
4. This dimension does not include interlead flash. Interlead flash shall not exceed 0.25 mm, per side.

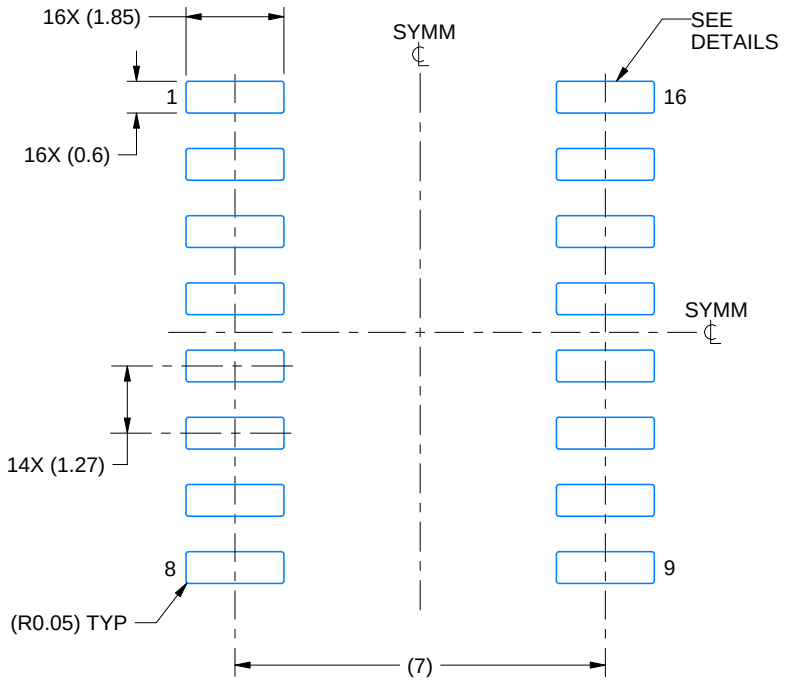

LAND PATTERN EXAMPLE
SCALE:7X

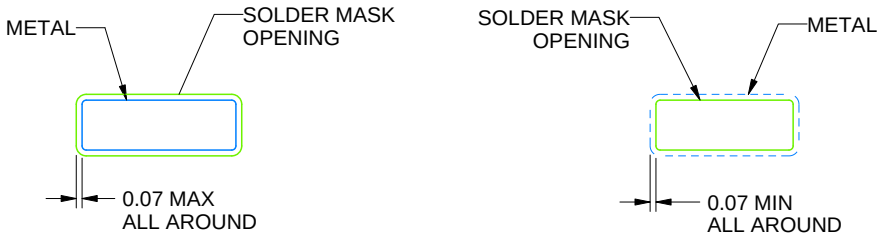

NON SOLDER MASK DEFINED

SOLDER MASK DEFINED

SOLDER MASK DETAILS

4220735/A 12/2021

NOTES: (continued)

5. Publication IPC-7351 may have alternate designs.
6. Solder mask tolerances between and around signal pads can vary based on board fabrication site.

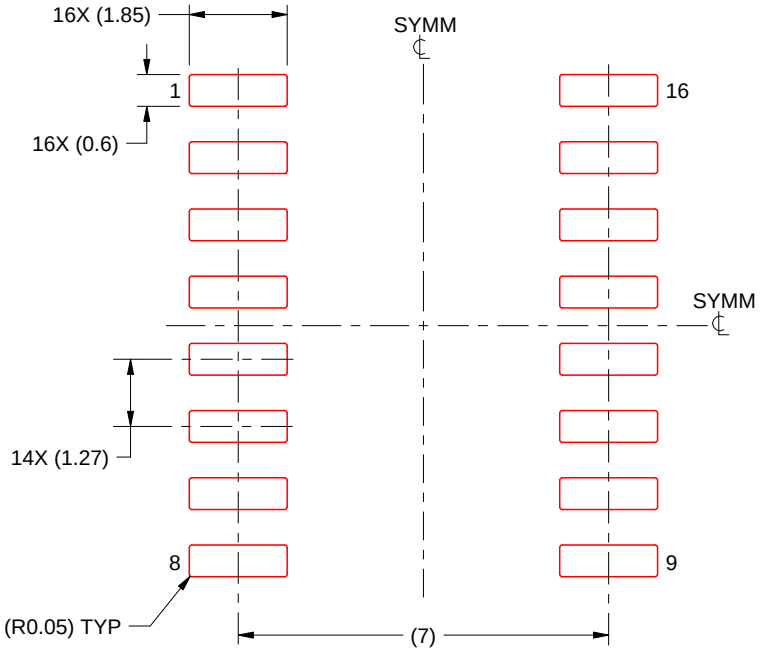

SOLDER PASTE EXAMPLE
BASED ON 0.125 mm THICK STENCIL
SCALE:7X

4220735/A 12/2021

NOTES: (continued)

7. Laser cutting apertures with trapezoidal walls and rounded corners may offer better paste release. IPC-7525 may have alternate design recommendations.
8. Board assembly site may have different recommendations for stencil design.

FK (S–CQCC–N**) LEADLESS CERAMIC CHIP CARRIER

28 TERMINAL SHOWN

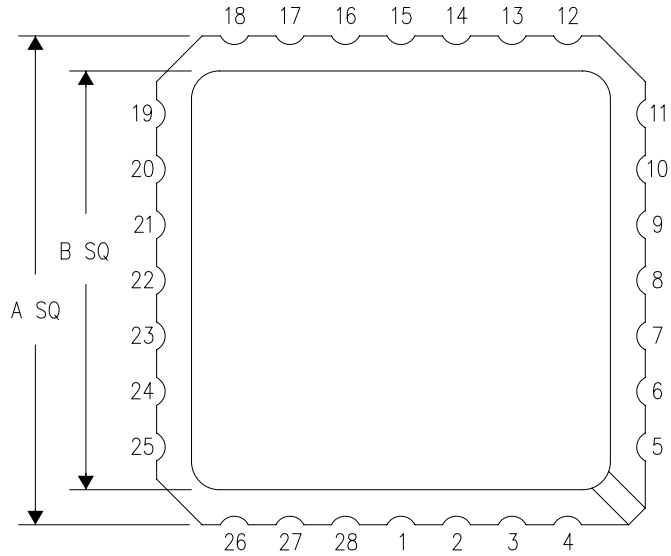

NO. OF TERMINALS **	A		B	
	MIN	MAX	MIN	MAX
20	0.342 (8,69)	0.358 (9,09)	0.307 (7,80)	0.358 (9,09)
28	0.442 (11,23)	0.458 (11,63)	0.406 (10,31)	0.458 (11,63)
44	0.640 (16,26)	0.660 (16,76)	0.495 (12,58)	0.560 (14,22)
52	0.740 (18,78)	0.761 (19,32)	0.495 (12,58)	0.560 (14,22)
68	0.938 (23,83)	0.962 (24,43)	0.850 (21,6)	0.858 (21,8)
84	1.141 (28,99)	1.165 (29,59)	1.047 (26,6)	1.063 (27,0)

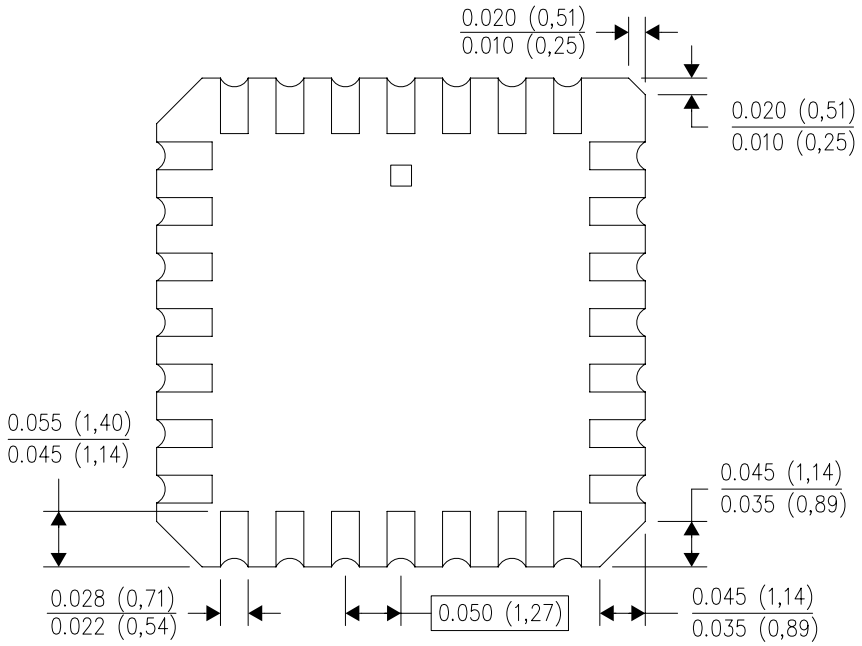

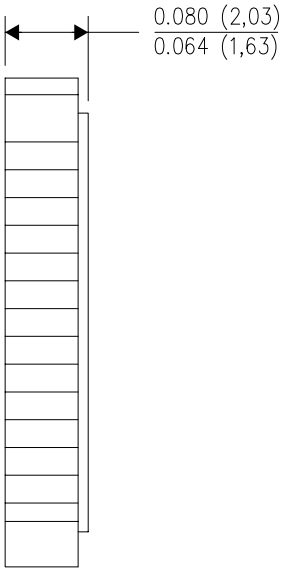

4040140/D 01/11

NOTES:
A. All linear dimensions are in inches (millimeters).
B. This drawing is subject to change without notice.
C. This package can be hermetically sealed with a metal lid.
D. Falls within JEDEC MS–004

D (R–PDSO–G16) PLASTIC SMALL OUTLINE

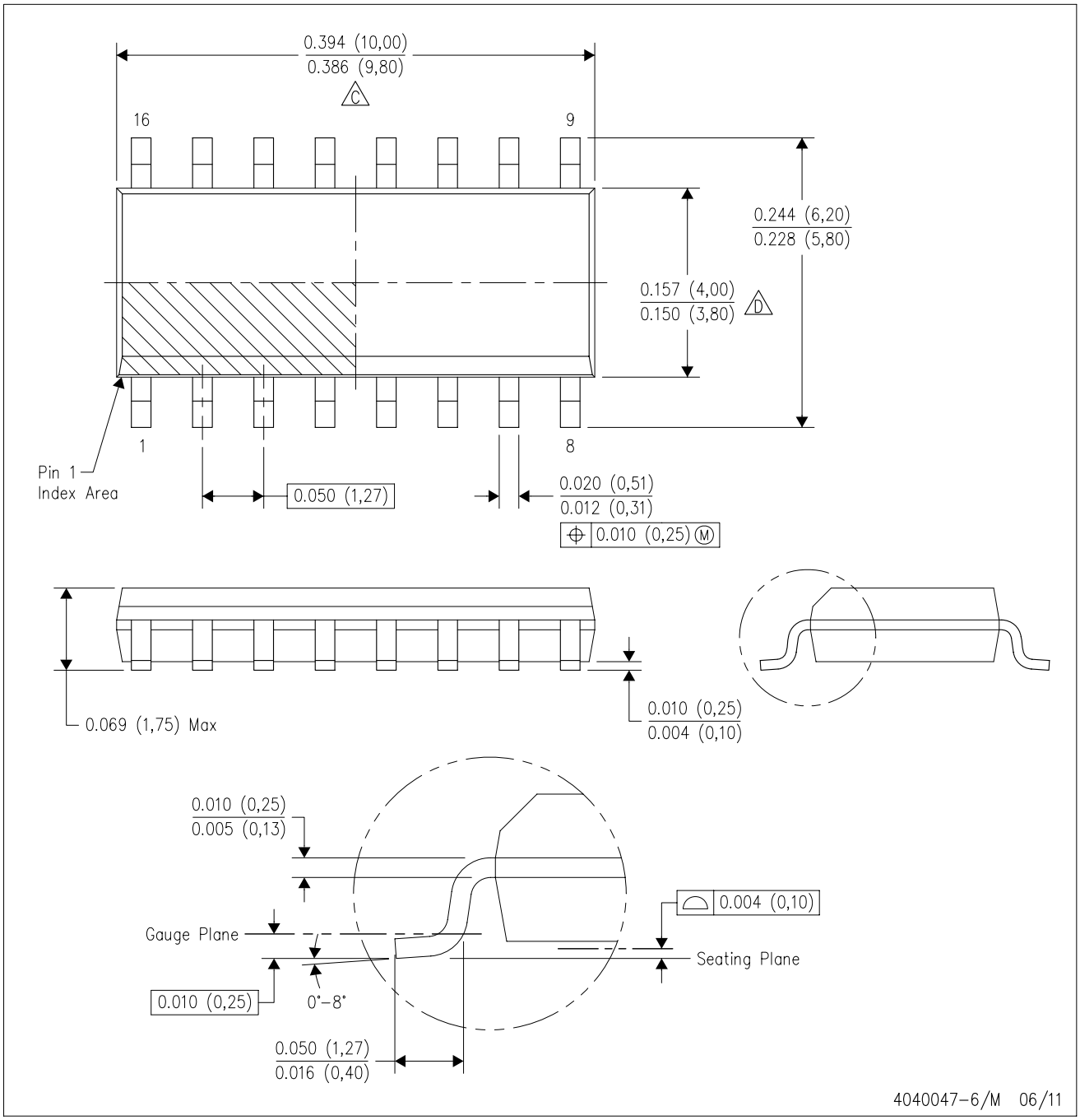

NOTES:
A. All linear dimensions are in inches (millimeters).
B. This drawing is subject to change without notice.
C. Body length does not include mold flash, protrusions, or gate burrs. Mold flash, protrusions, or gate burrs shall not exceed 0.006 (0,15) each side.
D. Body width does not include interlead flash. Interlead flash shall not exceed 0.017 (0,43) each side.
E. Reference JEDEC MS–012 variation AC.

D (R–PDSO–G16) PLASTIC SMALL OUTLINE

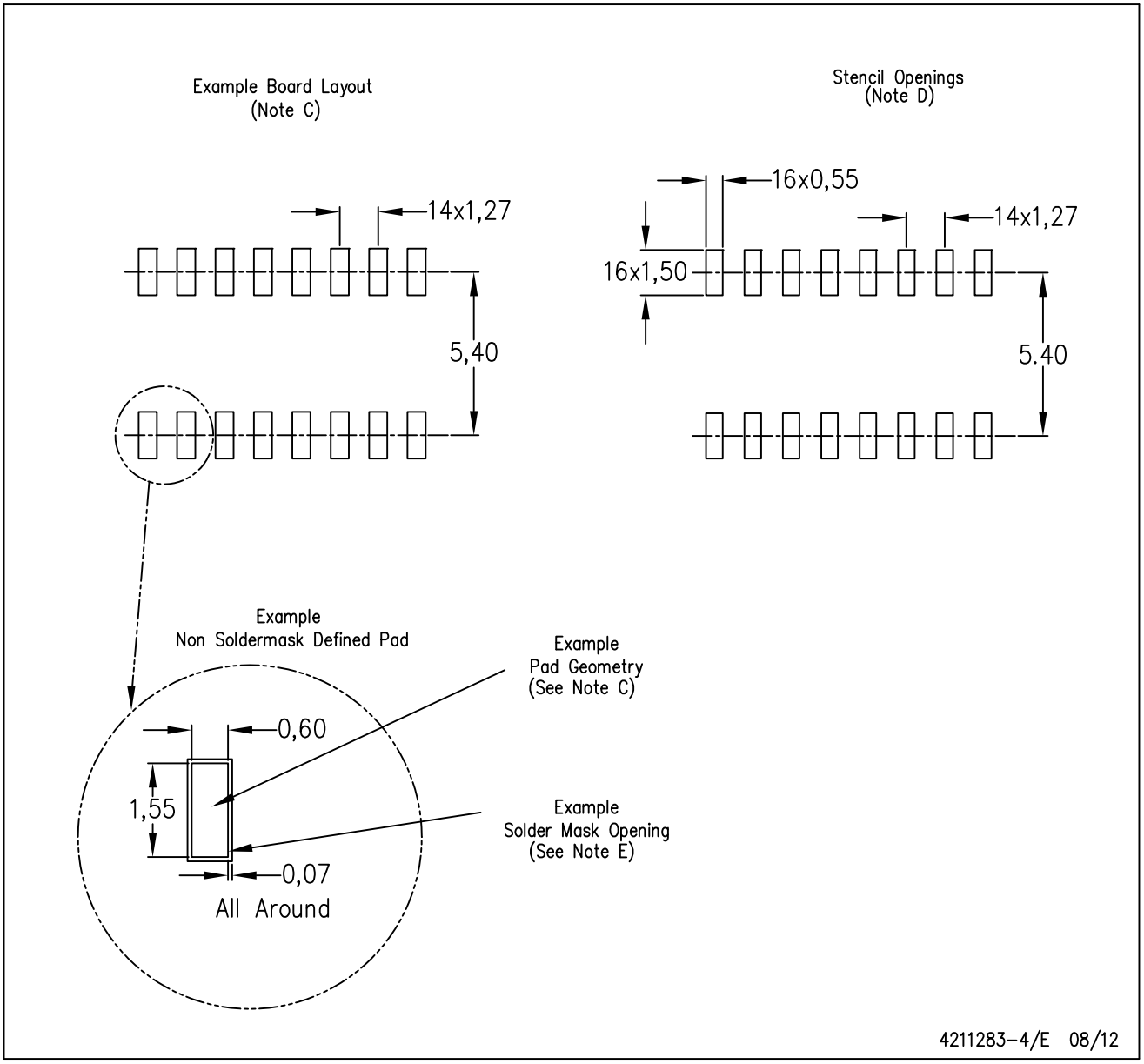

NOTES:
A. All linear dimensions are in millimeters.
B. This drawing is subject to change without notice.
C. Publication IPC–7351 is recommended for alternate designs.
D. Laser cutting apertures with trapezoidal walls and also rounding corners will offer better paste release. Customers should contact their board assembly site for stencil design recommendations. Refer to IPC–7525 for other stencil recommendations.
E. Customers should contact their board fabrication site for solder mask tolerances between and around signal pads.

PW0016A

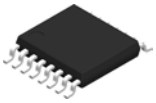

PACKAGE OUTLINE

TSSOP - 1.2 mm max height

SMALL OUTLINE PACKAGE

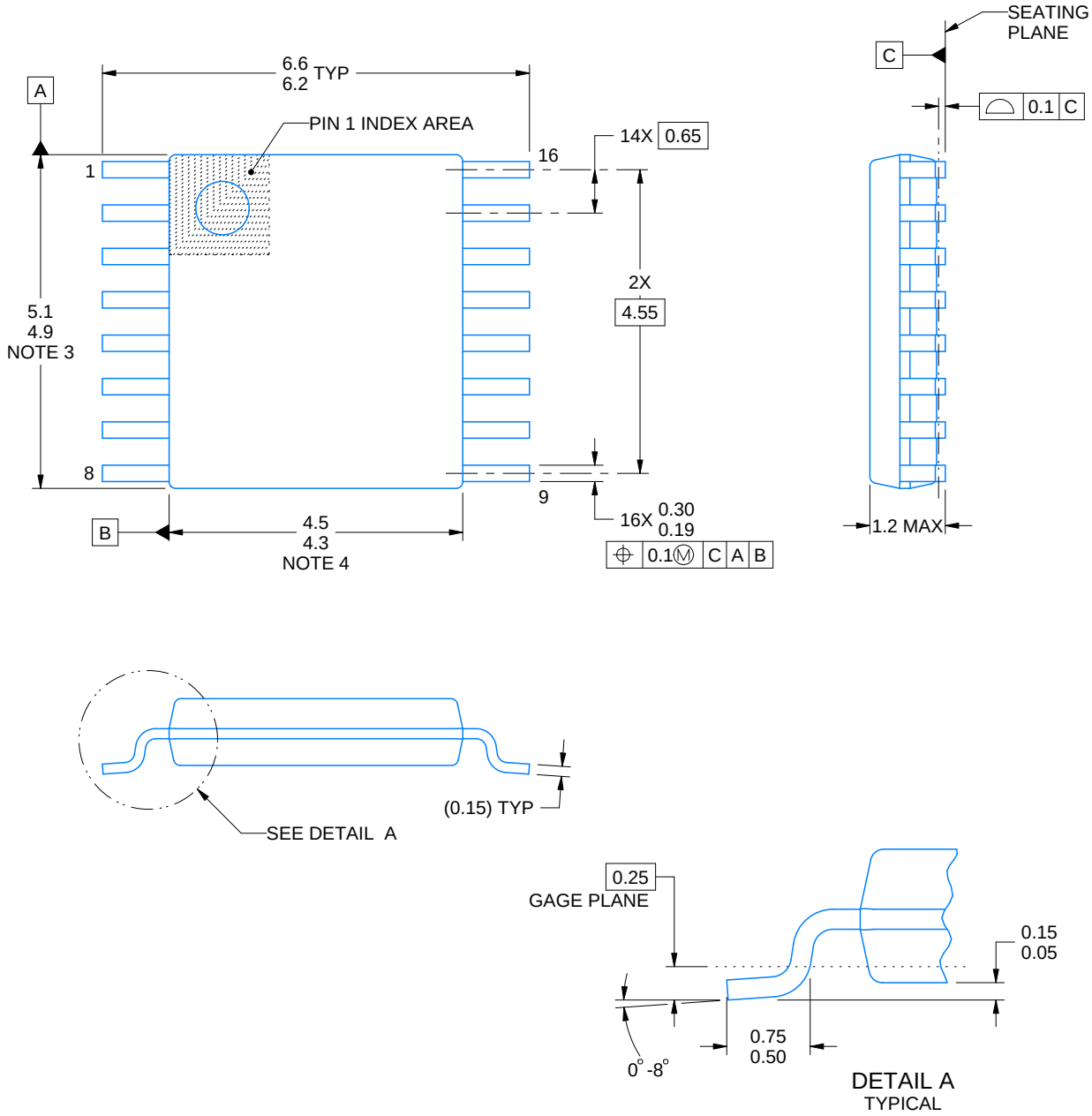

NOTES:

1. All linear dimensions are in millimeters. Any dimensions in parenthesis are for reference only. Dimensioning and tolerancing per ASME Y14.5M.
2. This drawing is subject to change without notice.
3. This dimension does not include mold flash, protrusions, or gate burrs. Mold flash, protrusions, or gate burrs shall not exceed 0.15 mm per side.
4. This dimension does not include interlead flash. Interlead flash shall not exceed 0.25 mm per side.
5. Reference JEDEC registration MO-153.

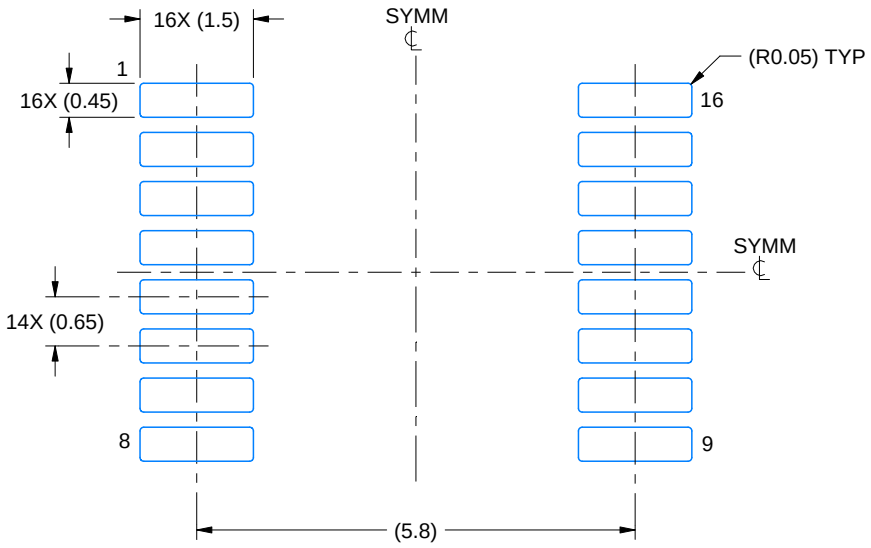

LAND PATTERN EXAMPLE
EXPOSED METAL SHOWN
SCALE: 10X

NON-SOLDER MASK DEFINED (PREFERRED)

SOLDER MASK DEFINED

SOLDER MASK DETAILS

4220204/A 02/2017

NOTES: (continued)

6. Publication IPC-7351 may have alternate designs.
7. Solder mask tolerances between and around signal pads can vary based on board fabrication site.

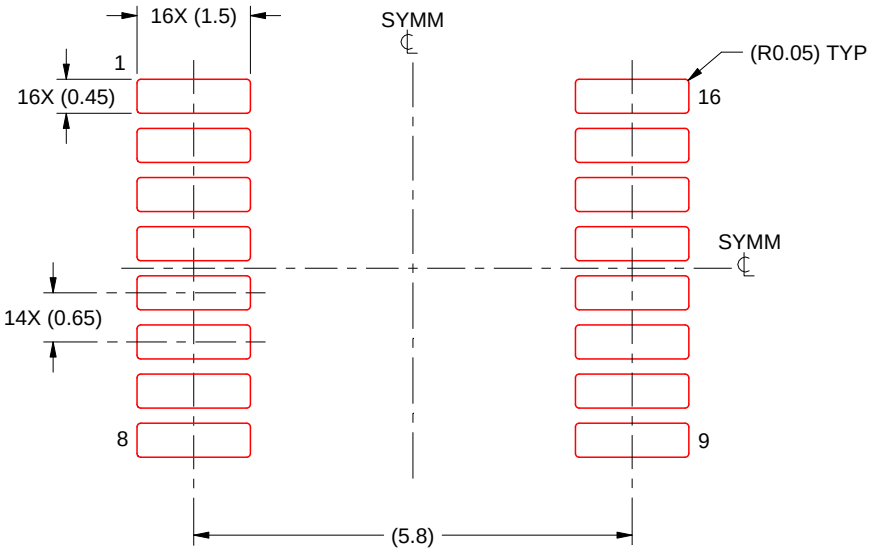

SOLDER PASTE EXAMPLE
BASED ON 0.125 mm THICK STENCIL
SCALE: 10X

4220204/A 02/2017

NOTES: (continued)

8. Laser cutting apertures with trapezoidal walls and rounded corners may offer better paste release. IPC-7525 may have alternate design recommendations.
9. Board assembly site may have different recommendations for stencil design.

MECHANICAL DATA

NS (R-PDSO-G)** **PLASTIC SMALL-OUTLINE PACKAGE**

14-PINS SHOWN

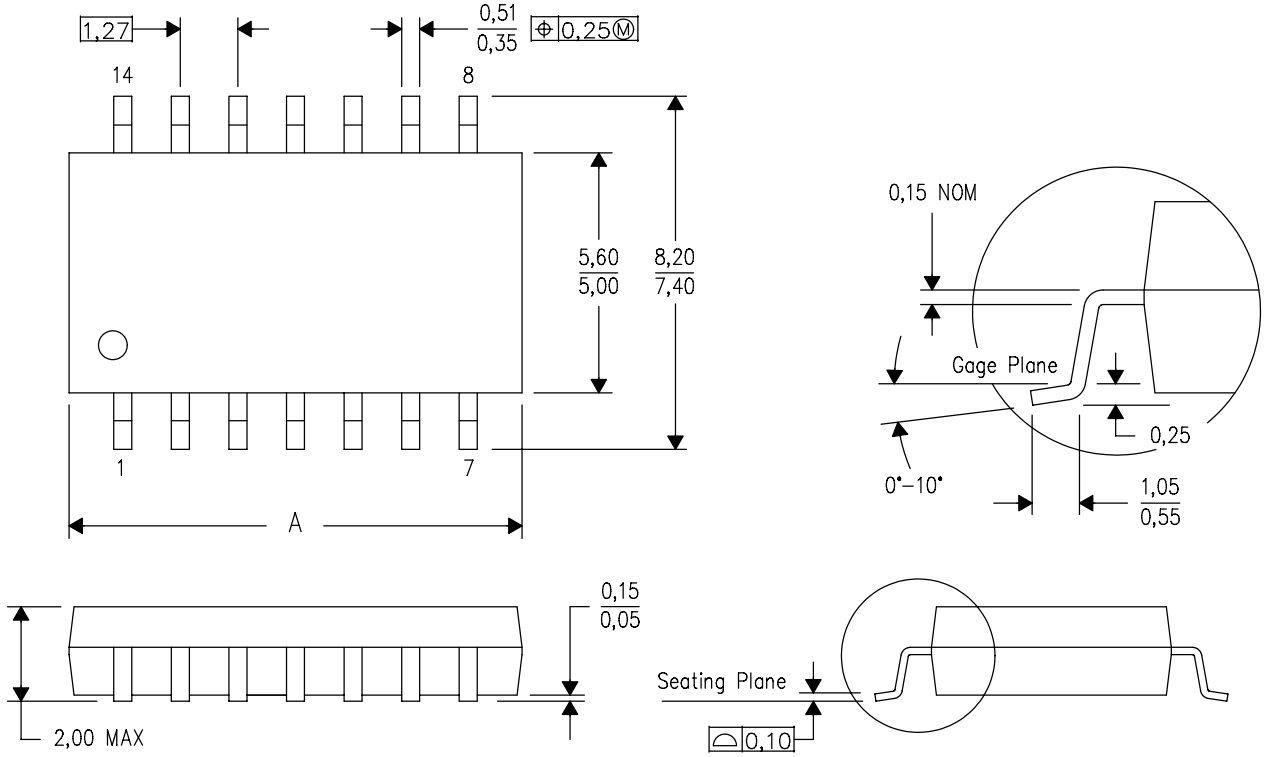

DIM \ PINS **	14	16	20	24
A MAX	10,50	10,50	12,90	15,30
A MIN	9,90	9,90	12,30	14,70

4040062/C 03/03

NOTES:
A. All linear dimensions are in millimeters.
B. This drawing is subject to change without notice.
C. Body dimensions do not include mold flash or protrusion, not to exceed 0,15.

W (R–GDFP–F16) CERAMIC DUAL FLATPACK

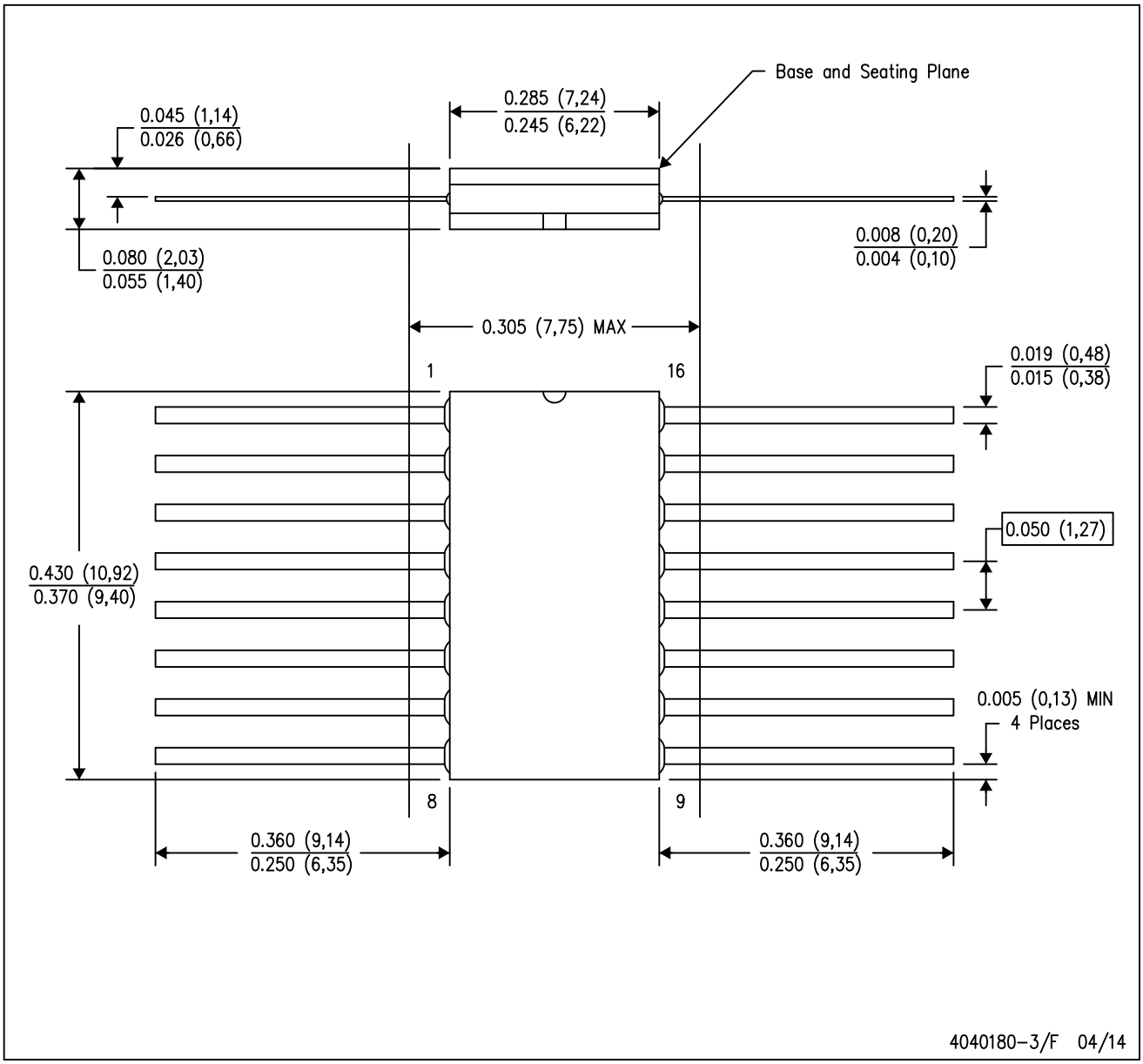

NOTES:
A. All linear dimensions are in inches (millimeters).
B. This drawing is subject to change without notice.
C. This package can be hermetically sealed with a ceramic lid using glass frit.
D. Index point is provided on cap for terminal identification only.
E. Falls within MIL STD 1835 GDFP2–F16

J (R–GDIP–T**) CERAMIC DUAL IN–LINE PACKAGE

14 LEADS SHOWN

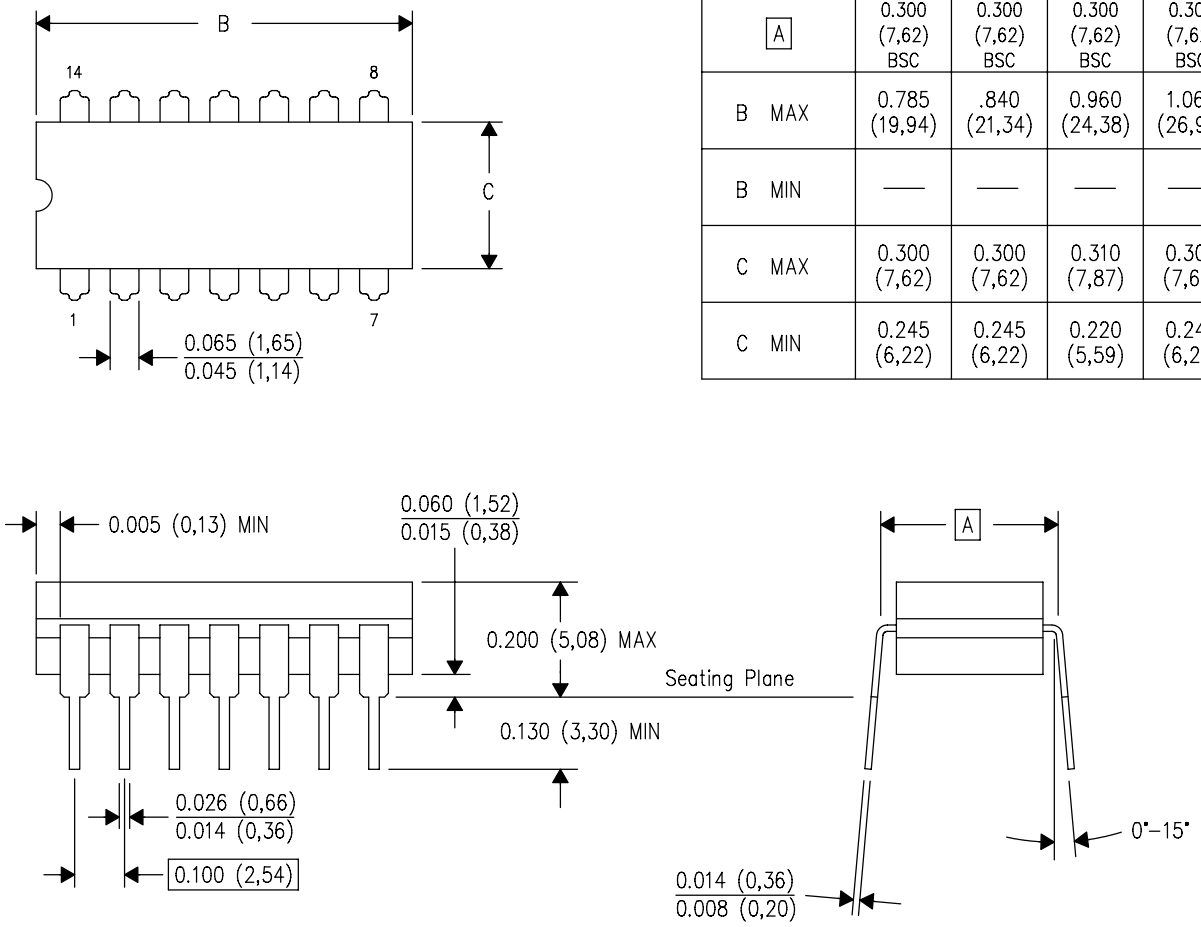

DIM \ PINS **	14	16	18	20
A	0.300 (7,62) BSC	0.300 (7,62) BSC	0.300 (7,62) BSC	0.300 (7,62) BSC
B MAX	0.785 (19,94)	.840 (21,34)	0.960 (24,38)	1.060 (26,92)
B MIN	—	—	—	—
C MAX	0.300 (7,62)	0.300 (7,62)	0.310 (7,87)	0.300 (7,62)
C MIN	0.245 (6,22)	0.245 (6,22)	0.220 (5,59)	0.245 (6,22)

4040083/F 03/03

NOTES:
- A. All linear dimensions are in inches (millimeters).
- B. This drawing is subject to change without notice.
- C. This package is hermetically sealed with a ceramic lid using glass frit.
- D. Index point is provided on cap for terminal identification only on press ceramic glass frit seal only.
- E. Falls within MIL STD 1835 GDIP1–T14, GDIP1–T16, GDIP1–T18 and GDIP1–T20.

N (R–PDIP–T**) PLASTIC DUAL–IN–LINE PACKAGE

16 PINS SHOWN

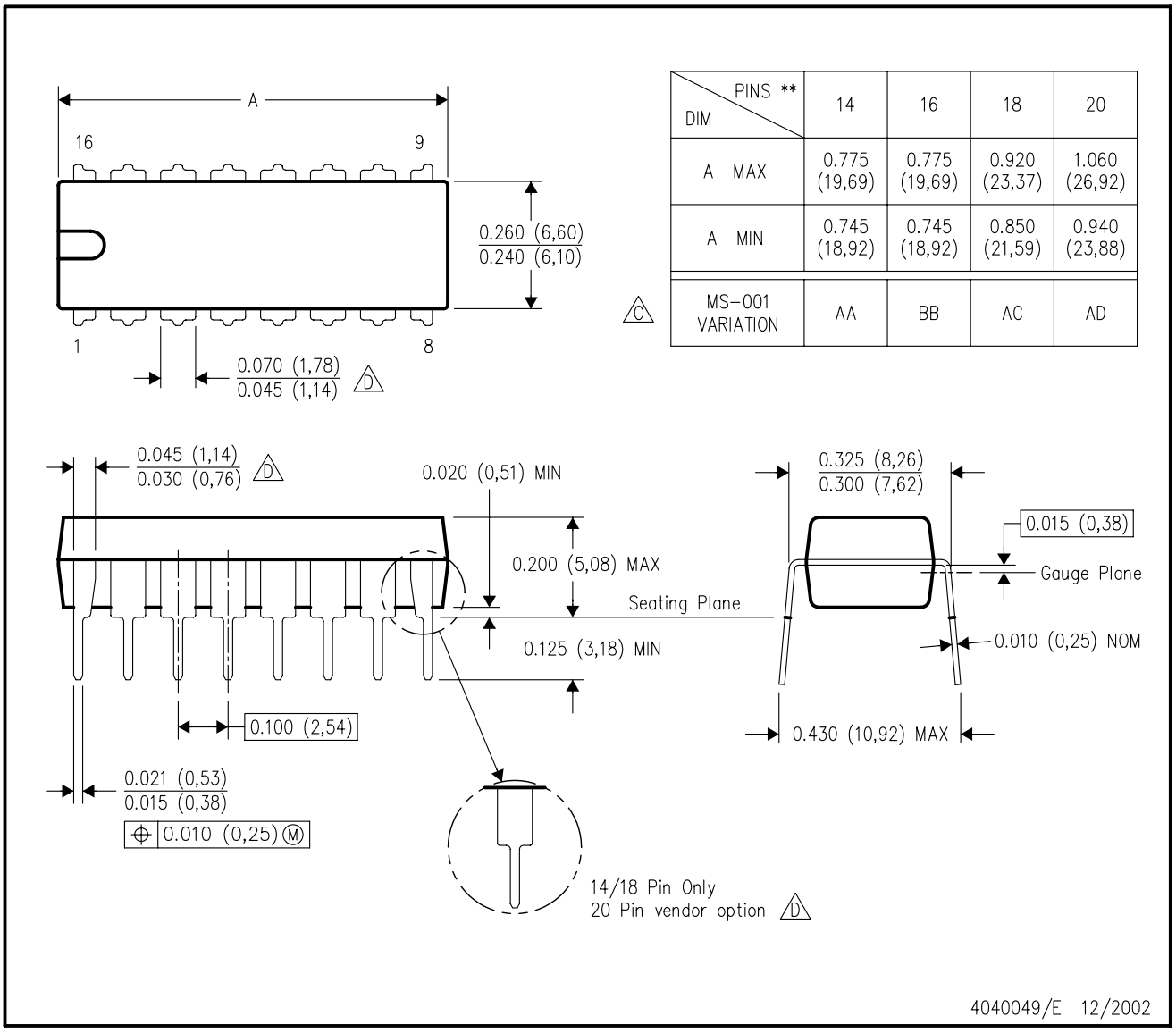

DIM \ PINS **	14	16	18	20
A MAX	0.775 (19,69)	0.775 (19,69)	0.920 (23,37)	1.060 (26,92)
A MIN	0.745 (18,92)	0.745 (18,92)	0.850 (21,59)	0.940 (23,88)
MS–001 VARIATION (C)	AA	BB	AC	AD

NOTES:
A. All linear dimensions are in inches (millimeters).
B. This drawing is subject to change without notice.
C. Falls within JEDEC MS–001, except 18 and 20 pin minimum body length (Dim A).
D. The 20 pin end lead shoulder width is a vendor option, either half or full width.

IMPORTANT NOTICE AND DISCLAIMER

TI PROVIDES TECHNICAL AND RELIABILITY DATA (INCLUDING DATA SHEETS), DESIGN RESOURCES (INCLUDING REFERENCE DESIGNS), APPLICATION OR OTHER DESIGN ADVICE, WEB TOOLS, SAFETY INFORMATION, AND OTHER RESOURCES “AS IS” AND WITH ALL FAULTS, AND DISCLAIMS ALL WARRANTIES, EXPRESS AND IMPLIED, INCLUDING WITHOUT LIMITATION ANY IMPLIED WARRANTIES OF MERCHANTABILITY, FITNESS FOR A PARTICULAR PURPOSE OR NON-INFRINGEMENT OF THIRD PARTY INTELLECTUAL PROPERTY RIGHTS.

These resources are intended for skilled developers designing with TI products. You are solely responsible for (1) selecting the appropriate TI products for your application, (2) designing, validating and testing your application, and (3) ensuring your application meets applicable standards, and any other safety, security, regulatory or other requirements.

These resources are subject to change without notice. TI grants you permission to use these resources only for development of an application that uses the TI products described in the resource. Other reproduction and display of these resources is prohibited. No license is granted to any other TI intellectual property right or to any third party intellectual property right. TI disclaims responsibility for, and you will fully indemnify TI and its representatives against, any claims, damages, costs, losses, and liabilities arising out of your use of these resources.

TI’s products are provided subject to TI’s Terms of Sale or other applicable terms available either on ti.com or provided in conjunction with such TI products. TI’s provision of these resources does not expand or otherwise alter TI’s applicable warranties or warranty disclaimers for TI products.

TI objects to and rejects any additional or different terms you may have proposed.

Mailing Address: Texas Instruments, Post Office Box 655303, Dallas, Texas 75265
Copyright © 2022, Texas Instruments Incorporated