LM4040-N/-Q1 精密微功耗并联电压基准

1 特性

- LM4040-N-Q1 符合汽车应用的 AEC Q-100 要求
  - 扩展等级 1：−40°C 至 +125°C，T_A
  - 工业等级 3：−40°C 至 +85°C，T_A
- 小型封装：SOT-23、TO-92 和 SC70
- 无需输出电容器
- 能够接受容性负载
- 2.048V、2.5V、3V、4.096V、5V、8.192V 和 10V 的固定反向击穿电压
- 主要规格 (2.5V LM4040-N)
  - 输出电压容差（A 级，25°C）：±0.1%（最大值）
  - 低输出噪声（10Hz 至 10kHz）：35μV_{rms}（典型值）
  - 宽运行电流范围：60μA 至 15mA
  - 工业温度范围：−40°C 至 +85°C
  - 扩展温度范围：−40°C 至 +125°C
  - 低温度系数：100ppm/°C（最大值）

2 应用

- 便携式、电池供电类设备
- 数据采集系统
- 仪表
- 过程控制
- 电源管理
- 产品测试
- 汽车
- 精密音频组件

3 说明

LM4040-N 精密电压基准非常适合空间关键型 应用，可采用小型 SC70 和 SOT-23 表面贴装封装。LM4040-N 采用了先进的设计，无需使用外部稳定电容器，同时可确保任何容性负载下的稳定性，这使得 LM4040-N 非常易于使用。它还提供了 2.048V、2.5V、3V、4.096V、5V、8.192V 和 10V 的固定反向击穿电压，可帮助设计人员进一步减少设计工作。最低运行电流范围为 60μA (2.5V LM4040-N) 至 100μA (10V LM4040-N)。所有版本都具有 15mA 的最高运行电流。

LM4040-N 在晶圆筛选期间使用了保险丝和齐纳击穿反向击穿电压修整，以确保主要部件在 25°C 下的精度优于 ±0.1%（A 级）。带隙基准温漂曲率校正和低动态阻抗可确保在广泛的运行温度和电流范围内实现稳定的反向击穿电压精度。

此外，我们还提供了具有两个反向击穿电压版本的 LM4041-N：可调节电压版和 1.2V 版。请参阅 LM4041-N 产品说明书 (SNOS641)。

器件信息(1)

器件型号	封装	封装尺寸（标称值）
LM4040-N	TO-92 (3)	4.30mm × 4.30mm
	SC70 (5)	2.00mm × 1.25mm
	SOT-23 (3)	2.92mm × 1.30mm

(1) 如需了解所有可用封装，请参阅产品说明书末尾的可订购产品附录。

并联基准应用原理图

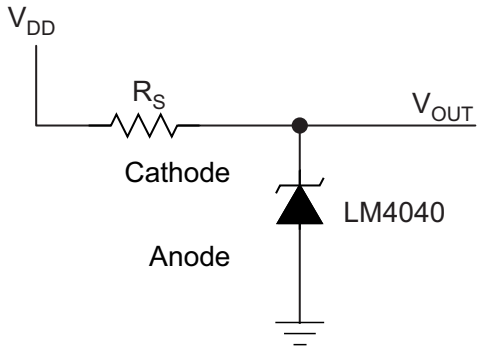

本文档旨在为方便起见，提供有关 TI 产品中文版本的信息，以确认产品的概要。 有关适用的官方英文版本的最新信息，请访问 www.ti.com，其内容始终优先。 TI 不保证翻译的准确性和有效性。 在实际设计之前，请务必参考最新版本的英文版本。

目录

1 特性 1
2 应用 1
3 说明 1
4 修订历史记录 3
5 Pin Configuration and Functions 4
6 Specifications 5
6.1 Absolute Maximum Ratings 5
6.2 ESD Ratings 5
6.3 Recommended Operating Conditions 6
6.4 Thermal Information 6
6.5 Electrical Characteristics: 2-V LM4040-N V_R Tolerance Grades 'A' And 'B'; Temperature Grade 'I' 7
6.6 Electrical Characteristics: 2-V LM4040-N V_R Tolerance Grades 'C', 'D', And 'E'; Temperature Grade 'I' 8
6.7 Electrical Characteristics: 2-V LM4040-N V_R Tolerance Grades 'C', 'D', And 'E'; Temperature Grade 'E' 10
6.8 Electrical Characteristics: 2.5-V LM4040-N V_R Tolerance Grades 'A' And 'B'; Temperature Grade 'I' (AEC Grade 3) 11
6.9 Electrical Characteristics: 2.5-V LM4040-N V_R Tolerance Grades 'C', 'D', and 'E'; Temperature Grade 'I' (AEC Grade 3) 13
6.10 Electrical Characteristics: 2.5-V LM4040-N V_R Tolerance Grades 'C', 'D', And 'E'; Temperature Grade 'E' (AEC Grade 1) 15
6.11 Electrical Characteristics: 3-V LM4040-N V_R Tolerance Grades 'A' And 'B'; Temperature Grade 'I' 17
6.12 Electrical Characteristics: 3-V LM4040-N V_R Tolerance Grades 'C', 'D', And 'E'; Temperature Grade 'I' 18
6.13 Electrical Characteristics: 3-V LM4040-N V_R Tolerance Grades 'C', 'D', And 'E'; Temperature Grade 'E' 20
6.14 Electrical Characteristics: 4.1-V LM4040-N V_R Tolerance Grades 'A' And 'B'; Temperature Grade 'I' 21
6.15 Electrical Characteristics: 4.1-V LM4040-N V_R Tolerance Grades 'C' and 'D'; Temperature Grade 'I' 22
6.16 Electrical Characteristics: 5-V LM4040-N V_R Tolerance Grades 'A' And 'B'; Temperature Grade 'I' 23
6.17 Electrical Characteristics: 5-V LM4040-N V_R Tolerance Grades 'C' And 'D'; Temperature Grade 'I' 24
6.18 Electrical Characteristics: 5-V LM4040-N V_R Tolerance Grades 'C' And 'D'; Temperature Grade 'E' 26
6.19 Electrical Characteristics: 8.2-V LM4040-N V_R Tolerance Grades 'A' And 'B'; Temperature Grade 'I' 27
6.20 Electrical Characteristics: 8.2-V Lm4040-N V_R Tolerance Grades 'C' And 'D'; Temperature Grade 'I' 28
6.21 Electrical Characteristics: 10-V LM4040-N V_R Tolerance Grades 'A' And 'B'; Temperature Grade 'I' 29
6.22 Electrical Characteristics: 10-V LM4040-N V_R Tolerance Grades 'C' And 'D'; Temperature Grade 'I' 30
6.23 Typical Characteristics 31
7 Parameter Measurement Information 32
8 Detailed Description 33
8.1 Overview 33
8.2 Functional Block Diagram 33
8.3 Feature Description 33
8.4 Device Functional Modes 33
9 Application and Implementation 34
9.1 Application Information 34
9.2 Typical Applications 34
10 Power Supply Recommendations 41
11 Layout 41
11.1 Layout Guidelines 41
11.2 Layout Example 41
12 器件和文档支持 42
12.1 文档支持 42
12.2 相关链接 42
12.3 接收文档更新通知 42
12.4 社区资源 42
12.5 商标 42
12.6 静电放电警告 42
12.7 术语表 42
13 机械、封装和可订购信息 42
13.1 SOT-23 和 SC70 封装标记信息 42

版权 © 2000–2018, Texas Instruments Incorporated

4 修订历史记录

注：之前版本的页码可能与当前版本有所不同。

Changes from Revision K (June 2016) to Revision L **Page**

- Removed soldering information from the *Absolute Maximum Ratings* table 5
- 添加了*接收文档更新通知* 部分 42

Changes from Revision J (August 2015) to Revision K **Page**

- Updated pinout diagrams 4

Changes from Revision I (April 2015) to Revision J **Page**

- 添加了 *ESD 额定值* 表、*特性 说明* 部分、*器件功能模式* 部分、*应用和实施* 部分、*电源建议* 部分、*布局* 部分、*器件和文档支持* 部分以及*机械、封装和可订购信息* 部分 1

Changes from Revision H (April 2013) to Revision I **Page**

- 新 TI 格式中最新增加的一些内容并提供了 SOT-23 封装的汽车级内容 1

Changes from Revision G (July 2012) to Revision H **Page**

- 将美国国家产品说明书的布局更改为 TI 格式 1

Copyright © 2000–2018, Texas Instruments Incorporated

5 Pin Configuration and Functions

DBZ Package
3-Pin SOT-23
Top View

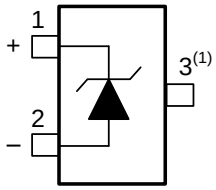

LP Package
3-Pin TO-92
Bottom View

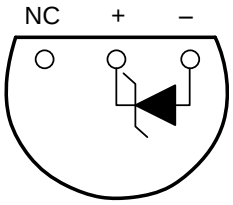

DCK Package
5-Pin SC70
Top View

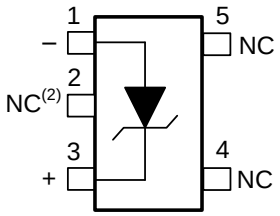

Pin Functions

PIN				I/O	DESCRIPTION
NAME	SOT-23	TO-92	SC70		
Anode	2	1	1	O	Anode pin, normally grounded
Cathode	1	2	3	I/O	Shunt Current/Output Voltage
NC	3(1)	—	2(2)	—	Must float or connect to anode
NC	—	3	4, 5	—	No connect

(1) This pin must be left floating or connected to pin 2.
(2) This pin must be left floating or connected to pin 1.

Copyright © 2000–2018, Texas Instruments Incorporated

6 Specifications

6.1 Absolute Maximum Ratings

over operating free-air temperature range (unless otherwise noted)(1)(2)

		MIN	MAX	UNIT
Reverse current			20	mA
Forward current			10	mA
Power dissipation (T_A = 25°C)(3)	SOT-23 (M3) package		306	mW
	TO-92 (Z) package		550	mW
	SC70 (M7) package		241	mW
Storage temperature, T_{stg}		–65	150	°C

(1) Stresses beyond those listed under *Absolute Maximum Ratings* may cause permanent damage to the device. These are stress ratings only, which do not imply functional operation of the device at these or any other conditions beyond those indicated under *Recommended Operating Conditions*. Exposure to absolute-maximum-rated conditions for extended periods may affect device reliability.
(2) If Military/Aerospace specified devices are required, please contact the Texas Instruments Sales Office/ Distributors for availability and specifications.
(3) The maximum power dissipation must be derated at elevated temperatures and is dictated by T_{Jmax} (maximum junction temperature), $R_{\theta JA}$ (junction to ambient thermal resistance), and T_A (ambient temperature). The maximum allowable power dissipation at any temperature is $PD_{max} = (T_{Jmax} - T_A)/R_{\theta JA}$ or the number given in the *Absolute Maximum Ratings*, whichever is lower. For the LM4040-N, T_{Jmax} = 125°C, and the typical thermal resistance ($R_{\theta JA}$), when board mounted, is 326°C/W for the SOT-23 package, and 180°C/W with 0.4″ lead length and 170°C/W with 0.125″ lead length for the TO-92 package and 415°C/W for the SC70 Package.

6.2 ESD Ratings

			VALUE	UNIT
$V_{(ESD)}$	Electrostatic discharge	Human-body model (HBM), per ANSI/ESDA/JEDEC JS-001(1)	±2000	V
		Charged-device model (CDM), per JEDEC specification JESD22-C101(2)	±200	

(1) JEDEC document JEP155 states that 500-V HBM allows safe manufacturing with a standard ESD control process.
(2) JEDEC document JEP157 states that 250-V CDM allows safe manufacturing with a standard ESD control process.

Copyright © 2000–2018, Texas Instruments Incorporated

6.3 Recommended Operating Conditions

over operating free-air temperature range (unless otherwise noted)(1)(2)

		MIN	MAX	UNIT
Temperature ($T_{min} \le T_A \le T_{max}$)	Industrial Temperature	–40°C ≤ T_A ≤ 85		°C
	Extended Temperature	–40 ≤ T_A ≤ 125°C		°C
Reverse Current	LM4040-N-2.0	60	15	µA to mA
	LM4040-N-2.5	60	15	µA to mA
	LM4040-N-3.0	62	15	µA to mA
	LM4040-N-4.1	68	15	µA to mA
	LM4040-N-5.0	74	15	µA to mA
	LM4040-N-8.2	91	15	µA to mA
	LM4040-N-10.0	100	15	µA to mA

(1) *Absolute Maximum Ratings* indicate limits beyond which damage to the device may occur. *Recommended Operating Conditions* indicate conditions for which the device is functional, but do not ensure specific performance limits. For ensured specifications and test conditions, see the *Electrical Characteristics*. The ensured specifications apply only for the test conditions listed. Some performance characteristics may degrade when the device is not operated under the listed test conditions.

(2) The maximum power dissipation must be derated at elevated temperatures and is dictated by T_{Jmax} (maximum junction temperature), $R_{\theta JA}$ (junction to ambient thermal resistance), and T_A (ambient temperature). The maximum allowable power dissipation at any temperature is $PD_{max} = (T_{Jmax} - T_A)/R_{\theta JA}$ or the number given in the Absolute Maximum Ratings, whichever is lower. For the LM4040-N, T_{Jmax} = 125°C, and the typical thermal resistance ($R_{\theta JA}$), when board mounted, is 326°C/W for the SOT-23 package, and 180°C/W with 0.4″ lead length and 170°C/W with 0.125″ lead length for the TO-92 package and 415°C/W for the SC70 package.

6.4 Thermal Information

THERMAL METRIC(1)		LM4040-N			UNIT
		DBZ (SOT-23)	LP (TO-92)	DCK (SC70)	
		3 PINS	3 PINS	5 PINS	
$R_{\theta JA}$	Junction-to-ambient thermal resistance	291.9	166	267	°C/W
$R_{\theta JC(top)}$	Junction-to-case (top) thermal resistance	114.3	88.2	95.6	°C/W
$R_{\theta JB}$	Junction-to-board thermal resistance	62.3	145.2	48.1	°C/W
ψ_{JT}	Junction-to-top characterization parameter	7.4	32.5	2.4	°C/W
ψ_{JB}	Junction-to-board characterization parameter	61	N/A	47.3	°C/W
$R_{\theta JC(bot)}$	Junction-to-case (bottom) thermal resistance	N/A	N/A	N/A	°C/W

(1) For more information about traditional and new thermal metrics, see the *Semiconductor and IC Package Thermal Metrics* application report (SPRA953).

Copyright © 2000–2018, Texas Instruments Incorporated

6.5 Electrical Characteristics: 2-V LM4040-N V_R Tolerance Grades 'A' And 'B'; Temperature Grade 'I'

all other limits $T_A = T_J = 25°C$. The grades A and B designate initial Reverse Breakdown Voltage tolerances of ±0.1% and ±0.2%, respectively.

PARAMETER		TEST CONDITIONS			MIN(1)	TYP	MAX(1)	UNIT
V_R	Reverse Breakdown Voltage	I_R = 100 μA				2.048		V
	Reverse Breakdown Voltage Tolerance(2)	I_R = 100 μA	LM4040AIM3 LM4040AIZ				±2	mV
			LM4040BIM3 LM4040BIZ LM4040BIM7				±4.1	
			LM4040AIM3 LM4040AIZ	$T_A = T_J = T_{MIN}$ to T_{MAX}			±15	mV
			LM4040BIM3 LM4040BIZ LM4040BIM7	$T_A = T_J = T_{MIN}$ to T_{MAX}			±17	
I_{RMIN}	Minimum Operating Current		$T_A = T_J = 25°C$			45	60	μA
			$T_A = T_J = T_{MIN}$ to T_{MAX}				65	
$\Delta V_R/\Delta T$	Average Reverse Breakdown Voltage Temperature Coefficient(2)	I_R = 10 mA				±20		ppm/°C
		I_R = 1 mA	$T_A = T_J = 25°C$			±15		ppm/°C
			$T_A = T_J = T_{MIN}$ to T_{MAX}				±100	
		I_R = 100 μA				±15		ppm/°C
$\Delta V_R/\Delta I_R$	Reverse Breakdown Voltage Change with Operating Current Change(3)	$I_{RMIN} \le I_R \le 1$ mA	$T_A = T_J = 25°C$			0.3	0.8	mV
			$T_A = T_J = T_{MIN}$ to T_{MAX}				1	
		1 mA ≤ I_R ≤ 15 mA	$T_A = T_J = 25°C$			2.5	6	mV
			$T_A = T_J = T_{MIN}$ to T_{MAX}				8	
Z_R	Reverse Dynamic Impedance	I_R = 1 mA, f = 120 Hz, $I_{AC} = 0.1\ I_R$				0.3	0.8	Ω
e_N	Wideband Noise	I_R = 100 μA 10 Hz ≤ f ≤ 10 kHz				35		μV_{rms}
ΔV_R	Reverse Breakdown Voltage Long Term Stability	t = 1000 hrs T = 25°C ±0.1°C I_R = 100 μA				120		ppm
V_{HYST}	Thermal Hysteresis(4)	ΔT = –40°C to 125°C				0.08%		

(1) Limits are 100% production tested at 25°C. Limits over temperature are ensured through correlation using Statistical Quality Control (SQC) methods. The limits are used to calculate AOQL.

(2) The overtemperature limit for Reverse Breakdown Voltage Tolerance is defined as the room temperature Reverse Breakdown Voltage Tolerance ±[($\Delta V_R/\Delta T$)(maxΔT)(V_R)]. Where, $\Delta V_R/\Delta T$ is the V_R temperature coefficient, maxΔT is the maximum difference in temperature from the reference point of 25°C to T_{MIN} or T_{MAX}, and V_R is the reverse breakdown voltage. The total overtemperature tolerance for the different grades in the industrial temperature range where maxΔT = 65°C is shown below:
A-grade: ±0.75% = ±0.1% ±100 ppm/°C × 65°C
B-grade: ±0.85% = ±0.2% ±100 ppm/°C × 65°C
C-grade: ±1.15% = ±0.5% ±100 ppm/°C × 65°C
D-grade: ±1.98% = ±1.0% ±150 ppm/°C × 65°C
E-grade: ±2.98% = ±2.0% ±150 ppm/°C × 65°C
The total overtemperature tolerance for the different grades in the extended temperature range where max ΔT = 100 °C is shown below:
C-grade: ±1.5% = ±0.5% ±100 ppm/°C × 100°C
D-grade: ±2.5% = ±1.0% ±150 ppm/°C × 100°C
E-grade: ±3.5% = ±2.0% ±150 ppm/°C × 100°C
Therefore, as an example, the A-grade 2.5-V LM4040-N has an overtemperature Reverse Breakdown Voltage tolerance of ±2.5 V × 0.75% = ±19 mV.

(3) Load regulation is measured on pulse basis from no load to the specified load current. Output changes due to die temperature change must be taken into account separately.

(4) Thermal hysteresis is defined as the difference in voltage measured at 25°C after cycling to temperature -40°C and the 25°C measurement after cycling to temperature 125°C.

Copyright © 2000–2018, Texas Instruments Incorporated

6.6 Electrical Characteristics: 2-V LM4040-N V_R Tolerance Grades 'C', 'D', And 'E'; Temperature Grade 'I'

all other limits $T_A = T_J = 25°C$. The grades C, D and E designate initial Reverse Breakdown Voltage tolerances of ±0.5%, ±1% and ±2%, respectively.

PARAMETER		TEST CONDITIONS			MIN(1)	TYP(2)	MAX(1)	UNIT
V_R	Reverse Breakdown Voltage	I_R = 100 µA				2.048		V
V_R	Reverse Breakdown Voltage Tolerance(3)	I_R = 100 µA	LM4040CIM3 LM4040CIZ LM4040CIM7	$T_A = T_J = 25°C$			±10	mV
				$T_A = T_J = T_{MIN}$ to T_{MAX}			±23	
			LM4040DIM3 LM4040DIZ LM4040DIM7	$T_A = T_J = 25°C$			±20	
				$T_A = T_J = T_{MIN}$ to T_{MAX}			±40	
			LM4040EIZ LM4040EIM7	$T_A = T_J = 25°C$			±41	
				$T_A = T_J = T_{MIN}$ to T_{MAX}			±60	
I_{RMIN}	Minimum Operating Current		LM4040CIM3 LM4040CIZ LM4040CIM7	$T_A = T_J = 25°C$		45	60	µA
				$T_A = T_J = T_{MIN}$ to T_{MAX}			65	
			LM4040DIM3 LM4040DIZ LM4040DIM7	$T_A = T_J = 25°C$		45	65	
				$T_A = T_J = T_{MIN}$ to T_{MAX}			70	
			LM4040EIZ LM4040EIM7	$T_A = T_J = 25°C$		45	65	
				$T_A = T_J = T_{MIN}$ to T_{MAX}			70	
$\Delta V_R/\Delta T$	Average Reverse Breakdown Voltage Temperature Coefficient(3)	I_R = 10 mA				±20		ppm/°C
		I_R = 1 mA	LM4040CIM3 LM4040CIZ LM4040CIM7	$T_A = T_J = 25°C$		±15		
				$T_A = T_J = T_{MIN}$ to T_{MAX}			±100	
			LM4040DIM3 LM4040DIZ LM4040DIM7	$T_A = T_J = 25°C$		±15		
				$T_A = T_J = T_{MIN}$ to T_{MAX}			±150	
			LM4040EIZ LM4040EIM7	$T_A = T_J = 25°C$		±15		
				$T_A = T_J = T_{MIN}$ to T_{MAX}			±150	
		I_R = 100 µA				±15		

(1) Limits are 100% production tested at 25°C. Limits over temperature are ensured through correlation using Statistical Quality Control (SQC) methods. The limits are used to calculate AOQL.
(2) Typicals are at $T_J = 25°C$ and represent most likely parametric norm.
(3) The overtemperature limit for Reverse Breakdown Voltage Tolerance is defined as the room temperature Reverse Breakdown Voltage Tolerance ±[($\Delta V_R/\Delta T$)(maxΔT)(V_R)]. Where, $\Delta V_R/\Delta T$ is the V_R temperature coefficient, maxΔT is the maximum difference in temperature from the reference point of 25°C to T_{MIN} or T_{MAX}, and V_R is the reverse breakdown voltage. The total overtemperature tolerance for the different grades in the industrial temperature range where maxΔT = 65°C is shown below:
A-grade: ±0.75% = ±0.1% ±100 ppm/°C × 65°C
B-grade: ±0.85% = ±0.2% ±100 ppm/°C × 65°C
C-grade: ±1.15% = ±0.5% ±100 ppm/°C × 65°C
D-grade: ±1.98% = ±1.0% ±150 ppm/°C × 65°C
E-grade: ±2.98% = ±2.0% ±150 ppm/°C × 65°C
The total overtemperature tolerance for the different grades in the extended temperature range where max ΔT = 100 °C is shown below:
C-grade: ±1.5% = ±0.5% ±100 ppm/°C × 100°C
D-grade: ±2.5% = ±1.0% ±150 ppm/°C × 100°C
E-grade: ±3.5% = ±2.0% ±150 ppm/°C × 100°C
Therefore, as an example, the A-grade 2.5-V LM4040-N has an overtemperature Reverse Breakdown Voltage tolerance of ±2.5V × 0.75% = ±19 mV.

Copyright © 2000–2018, Texas Instruments Incorporated

Electrical Characteristics: 2-V LM4040-N V_R Tolerance Grades 'C', 'D', And 'E'; Temperature Grade 'I' (continued)

all other limits $T_A = T_J = 25°C$. The grades C, D and E designate initial Reverse Breakdown Voltage tolerances of ±0.5%, ±1% and ±2%, respectively.

PARAMETER		TEST CONDITIONS			MIN(1)	TYP(2)	MAX(1)	UNIT
$\Delta V_R/\Delta I_R$	Reverse Breakdown Voltage Change with Operating Current Change(4)	$I_{RMIN} \le I_R \le 1$ mA	LM4040CIM3 LM4040CIZ LM4040CIM7	$T_A = T_J = 25°C$		0.3	0.8	mV
				$T_A = T_J = T_{MIN}$ to T_{MAX}			1	
			LM4040DIM3 LM4040DIZ LM4040DIM7	$T_A = T_J = 25°C$		0.3	1	
				$T_A = T_J = T_{MIN}$ to T_{MAX}			1.2	
			LM4040EIZ LM4040EIM7	$T_A = T_J = 25°C$		0.3	1	
				$T_A = T_J = T_{MIN}$ to T_{MAX}			1.2	
		1 mA ≤ I_R ≤ 15 mA	LM4040CIM3 LM4040CIZ LM4040CIM7	$T_A = T_J = 25°C$		2.5	6	
				$T_A = T_J = T_{MIN}$ to T_{MAX}			8	
			LM4040DIM3 LM4040DIZ LM4040DIM7	$T_A = T_J = 25°C$		2.5	8	
				$T_A = T_J = T_{MIN}$ to T_{MAX}			10	
			LM4040EIZ LM4040EIM7	$T_A = T_J = 25°C$		2.5	8	
				$T_A = T_J = T_{MIN}$ to T_{MAX}			10	
Z_R	Reverse Dynamic Impedance	I_R = 1 mA, f = 120 Hz $I_{AC} = 0.1\ I_R$	LM4040CIM3 LM4040CIZ LM4040CIM7			0.3	0.9	Ω
			LM4040DIM3 LM4040DIZ LM4040DIM7			0.3	1.1	
			LM4040EIZ LM4040EIM7			0.3	1.1	
e_N	Wideband Noise	I_R = 100 µA 10 Hz ≤ f ≤ 10 kHz				35		μV_{rms}
ΔV_R	Reverse Breakdown Voltage Long Term Stability	t = 1000 hrs T = 25°C ±0.1°C I_R = 100 µA				120		ppm
V_{HYST}	Thermal Hysteresis(5)	ΔT = −40°C to 125°C				0.08%		

(4) Load regulation is measured on pulse basis from no load to the specified load current. Output changes due to die temperature change must be taken into account separately.
(5) Thermal hysteresis is defined as the difference in voltage measured at 25°C after cycling to temperature –40°C and the 25°C measurement after cycling to temperature 125°C.

Copyright © 2000–2018, Texas Instruments Incorporated

6.7 Electrical Characteristics: 2-V LM4040-N V_R Tolerance Grades 'C', 'D', And 'E'; Temperature Grade 'E'

all other limits $T_A = T_J = 25°C$. The grades C, D and E designate initial Reverse Breakdown Voltage tolerances of ±0.5%, ±1% and ±2%, respectively.

PARAMETER		TEST CONDITIONS			MIN(1)	TYP(2)	MAX(1)	UNIT
V_R	Reverse Breakdown Voltage	I_R = 100 μA				2.048		V
V_R	Reverse Breakdown Voltage Tolerance(3)	I_R = 100 μA	LM4040CEM3	$T_A = T_J = 25°C$			±10	mV
				$T_A = T_J = T_{MIN}$ to T_{MAX}			±30	
			LM4040DEM3	$T_A = T_J = 25°C$			±20	
				$T_A = T_J = T_{MIN}$ to T_{MAX}			±50	
			LM4040EEM3	$T_A = T_J = 25°C$			±41	
				$T_A = T_J = T_{MIN}$ to T_{MAX}			±70	
I_{RMIN}	Minimum Operating Current		LM4040CEM3	$T_A = T_J = 25°C$		45	60	μA
				$T_A = T_J = T_{MIN}$ to T_{MAX}			68	
			LM4040DEM3	$T_A = T_J = 25°C$		45	65	
				$T_A = T_J = T_{MIN}$ to T_{MAX}			73	
			LM4040EEM3	$T_A = T_J = 25°C$		45	65	
				$T_A = T_J = T_{MIN}$ to T_{MAX}			73	
$\Delta V_R/\Delta T$	Average Reverse Breakdown Voltage Temperature Coefficient(3)	I_R = 10 mA				±20		ppm/°C
		I_R = 1 mA	LM4040CEM3	$T_A = T_J = 25°C$		±15		
				$T_A = T_J = T_{MIN}$ to T_{MAX}			±100	
			LM4040DEM3	$T_A = T_J = 25°C$		±15		
				$T_A = T_J = T_{MIN}$ to T_{MAX}			±150	
			LM4040EEM3	$T_A = T_J = 25°C$		±15		
				$T_A = T_J = T_{MIN}$ to T_{MAX}			±150	
		I_R = 100 μA				±15		
$\Delta V_R/\Delta I_R$	Reverse Breakdown Voltage Change with Operating Current Change(4)	$I_{RMIN} \le I_R \le 1$ mA	LM4040CEM3	$T_A = T_J = 25°C$		0.3	0.8	mV
				$T_A = T_J = T_{MIN}$ to T_{MAX}			1	
			LM4040DEM3	$T_A = T_J = 25°C$		0.3	1	
				$T_A = T_J = T_{MIN}$ to T_{MAX}			1.2	
			LM4040EEM3	$T_A = T_J = 25°C$		0.3	1	
				$T_A = T_J = T_{MIN}$ to T_{MAX}			1.2	
		1 mA ≤ I_R ≤ 15 mA	LM4040CEM3	$T_A = T_J = 25°C$		2.5	6	
				$T_A = T_J = T_{MIN}$ to T_{MAX}			8	
			LM4040DEM3	$T_A = T_J = 25°C$		2.5	8	
				$T_A = T_J = T_{MIN}$ to T_{MAX}			10	
			LM4040EEM3	$T_A = T_J = 25°C$		2.5	8	
				$T_A = T_J = T_{MIN}$ to T_{MAX}			10	

(1) Limits are 100% production tested at 25°C. Limits over temperature are ensured through correlation using Statistical Quality Control (SQC) methods. The limits are used to calculate AOQL.
(2) Typicals are at T_J = 25°C and represent most likely parametric norm.
(3) The overtemperature limit for Reverse Breakdown Voltage Tolerance is defined as the room temperature Reverse Breakdown Voltage Tolerance ±[($\Delta V_R/\Delta T$)(maxΔT)(V_R)]. Where, $\Delta V_R/\Delta T$ is the V_R temperature coefficient, maxΔT is the maximum difference in temperature from the reference point of 25°C to T_{MIN} or T_{MAX}, and V_R is the reverse breakdown voltage. The total overtemperature tolerance for the different grades in the industrial temperature range where maxΔT = 65°C is shown below:
A-grade: ±0.75% = ±0.1% ±100 ppm/°C × 65°C
B-grade: ±0.85% = ±0.2% ±100 ppm/°C × 65°C
C-grade: ±1.15% = ±0.5% ±100 ppm/°C × 65°C
D-grade: ±1.98% = ±1.0% ±150 ppm/°C × 65°C
E-grade: ±2.98% = ±2.0% ±150 ppm/°C × 65°C
The total overtemperature tolerance for the different grades in the extended temperature range where max ΔT = 100 °C is shown below:
C-grade: ±1.5% = ±0.5% ±100 ppm/°C × 100°C
D-grade: ±2.5% = ±1.0% ±150 ppm/°C × 100°C
E-grade: ±3.5% = ±2.0% ±150 ppm/°C × 100°C
Therefore, as an example, the A-grade 2.5-V LM4040-N has an overtemperature Reverse Breakdown Voltage tolerance of ±2.5V × 0.75% = ±19 mV.
(4) Load regulation is measured on pulse basis from no load to the specified load current. Output changes due to die temperature change must be taken into account separately.

Copyright © 2000–2018, Texas Instruments Incorporated

Electrical Characteristics: 2-V LM4040-N V_R Tolerance Grades 'C', 'D', And 'E'; Temperature Grade 'E' (continued)

all other limits $T_A = T_J = 25°C$. The grades C, D and E designate initial Reverse Breakdown Voltage tolerances of ±0.5%, ±1% and ±2%, respectively.

PARAMETER		TEST CONDITIONS		MIN(1)	TYP(2)	MAX(1)	UNIT
Z_R	Reverse Dynamic Impedance	I_R = 1 mA, f = 120 Hz, I_{AC} = 0.1 I_R	LM4040CEM3		0.3	0.9	Ω
			LM4040DEM3		0.3	1.1	
			LM4040EEM3		0.3	1.1	
e_N	Wideband Noise	I_R = 100 μA 10 Hz ≤ f ≤ 10 kHz			35		μV_{rms}
ΔV_R	Reverse Breakdown Voltage Long Term Stability	t = 1000 hrs T = 25°C ±0.1°C I_R = 100 μA			120		ppm
V_{HYST}	Thermal Hysteresis(5)	ΔT = −40°C to 125°C			0.08%		

(5) Thermal hysteresis is defined as the difference in voltage measured at 25°C after cycling to temperature –40°C and the 25°C measurement after cycling to temperature 125°C.

6.8 Electrical Characteristics: 2.5-V LM4040-N V_R Tolerance Grades 'A' And 'B'; Temperature Grade 'I' (AEC Grade 3)

all other limits $T_A = T_J = 25°C$. The grades A and B designate initial Reverse Breakdown Voltage tolerances of ±0.1% and ±0.2%, respectively.

PARAMETER		TEST CONDITIONS			MIN(1)	TYP(2)	MAX(1)	UNIT
V_R	Reverse Breakdown Voltage	I_R = 100 μA				2.5		V
	Reverse Breakdown Voltage Tolerance(3)	I_R = 100 μA	LM4040AIM3 LM4040AIZ LM4040AIM3	$T_A = T_J = 25°C$			±2.5	mV
				$T_A = T_J = T_{MIN}$ to T_{MAX}			±19	
			LM4040BIM3 LM4040BIZ LM4040BIM7 LM4040QBIM3	$T_A = T_J = 25°C$			±5	
				$T_A = T_J = T_{MIN}$ to T_{MAX}			±21	
I_{RMIN}	Minimum Operating Current		$T_A = T_J = 25°C$			45	60	μA
			$T_A = T_J = T_{MIN}$ to T_{MAX}				65	
$\Delta V_R/\Delta T$	Average Reverse Breakdown Voltage Temperature Coefficient(3)	I_R = 10 mA				±20		ppm/°C
		I_R = 1 mA	$T_A = T_J = 25°C$			±15		
			$T_A = T_J = T_{MIN}$ to T_{MAX}				±100	
		I_R = 100 μA				±15		

(1) Limits are 100% production tested at 25°C. Limits over temperature are ensured through correlation using Statistical Quality Control (SQC) methods. The limits are used to calculate AOQL.
(2) Typicals are at T_J = 25°C and represent most likely parametric norm.
(3) The overtemperature limit for Reverse Breakdown Voltage Tolerance is defined as the room temperature Reverse Breakdown Voltage Tolerance ±[($\Delta V_R/\Delta T$)(maxΔT)(V_R)]. Where, $\Delta V_R/\Delta T$ is the V_R temperature coefficient, maxΔT is the maximum difference in temperature from the reference point of 25°C to T_{MIN} or T_{MAX}, and V_R is the reverse breakdown voltage. The total overtemperature tolerance for the different grades in the industrial temperature range where maxΔT = 65°C is shown below:
A-grade: ±0.75% = ±0.1% ±100 ppm/°C × 65°C
B-grade: ±0.85% = ±0.2% ±100 ppm/°C × 65°C
C-grade: ±1.15% = ±0.5% ±100 ppm/°C × 65°C
D-grade: ±1.98% = ±1.0% ±150 ppm/°C × 65°C
E-grade: ±2.98% = ±2.0% ±150 ppm/°C × 65°C
The total overtemperature tolerance for the different grades in the extended temperature range where max ΔT = 100 °C is shown below:
C-grade: ±1.5% = ±0.5% ±100 ppm/°C × 100°C
D-grade: ±2.5% = ±1.0% ±150 ppm/°C × 100°C
E-grade: ±3.5% = ±2.0% ±150 ppm/°C × 100°C
Therefore, as an example, the A-grade 2.5-V LM4040-N has an overtemperature Reverse Breakdown Voltage tolerance of ±2.5V × 0.75% = ±19 mV.

Copyright © 2000–2018, Texas Instruments Incorporated

Electrical Characteristics: 2.5-V LM4040-N V_R Tolerance Grades 'A' And 'B'; Temperature Grade 'I' (AEC Grade 3) (continued)

all other limits $T_A = T_J = 25°C$. The grades A and B designate initial Reverse Breakdown Voltage tolerances of ±0.1% and ±0.2%, respectively.

PARAMETER		TEST CONDITIONS		MIN(1)	TYP(2)	MAX(1)	UNIT
$\Delta V_R/\Delta I_R$	Reverse Breakdown Voltage Change with Operating Current Change(4)	$I_{RMIN} \le I_R \le 1$ mA	$T_A = T_J = 25°C$		0.3	0.8	mV
			$T_A = T_J = T_{MIN}$ to T_{MAX}			1	
		1 mA ≤ I_R ≤ 15 mA	$T_A = T_J = 25°C$		2.5	6	
			$T_A = T_J = T_{MIN}$ to T_{MAX}			8	
Z_R	Reverse Dynamic Impedance	I_R = 1 mA, f = 120 Hz, $I_{AC} = 0.1\ I_R$			0.3	0.8	Ω
e_N	Wideband Noise	I_R = 100 µA 10 Hz ≤ f ≤ 10 kHz			35		μV_{rms}
ΔV_R	Reverse Breakdown Voltage Long Term Stability	t = 1000 hrs T = 25°C ±0.1°C I_R = 100 µA			120		ppm
V_{HYST}	Thermal Hysteresis(5)	ΔT = −40°C to 125°C			0.08%		

(4) Load regulation is measured on pulse basis from no load to the specified load current. Output changes due to die temperature change must be taken into account separately.
(5) Thermal hysteresis is defined as the difference in voltage measured at 25°C after cycling to temperature –40°C and the 25°C measurement after cycling to temperature 125°C.

Copyright © 2000–2018, Texas Instruments Incorporated

6.9 Electrical Characteristics: 2.5-V LM4040-N V_R Tolerance Grades 'C', 'D', and 'E'; Temperature Grade 'I' (AEC Grade 3)

all other limits $T_A = T_J = 25°C$. The grades C, D and E designate initial Reverse Breakdown Voltage tolerances of ±0.5%, ±1% and ±2%, respectively.

PARAMETER		TEST CONDITIONS			MIN(1)	TYP(2)	MAX(1)	UNIT
V_R	Reverse Breakdown Voltage	I_R = 100 μA				2.5		V
V_R	Reverse Breakdown Voltage Tolerance(3)	I_R = 100 μA	LM4040CIZ LM4040CIM3 LM4040CIM7 LM4040QCIM3	$T_A = T_J = 25°C$			±12	mV
				$T_A = T_J = T_{MIN}$ to T_{MAX}			±29	
			LM4040DIZ LM4040DIM3 LM4040DIM7 LM4040QDIM3	$T_A = T_J = 25°C$			±25	
				$T_A = T_J = T_{MIN}$ to T_{MAX}			±49	
			LM4040EIZ LM4040EIM3 LM4040EIM7 LM4040QEIM3	$T_A = T_J = 25°C$			±50	
				$T_A = T_J = T_{MIN}$ to T_{MAX}			±74	
I_{RMIN}	Minimum Operating Current		LM4040CIZ LM4040CIM3 LM4040CIM7 LM4040QCIM3	$T_A = T_J = 25°C$		45	60	μA
				$T_A = T_J = T_{MIN}$ to T_{MAX}			65	
			LM4040DIZ LM4040DIM3 LM4040DIM7 LM4040QDIM3	$T_A = T_J = 25°C$		45	65	
				$T_A = T_J = T_{MIN}$ to T_{MAX}			70	
			LM4040EIZ LM4040EIM3 LM4040EIM7 LM4040QEIM3	$T_A = T_J = 25°C$		45	65	
				$T_A = T_J = T_{MIN}$ to T_{MAX}			70	
$\Delta V_R/\Delta T$	Average Reverse Breakdown Voltage Temperature Coefficient(3)	I_R = 10 mA				±20		ppm/°C
		I_R = 1 mA	LM4040CIZ LM4040CIM3 LM4040CIM7 LM4040QCIM3	$T_A = T_J = 25°C$		±15		
				$T_A = T_J = T_{MIN}$ to T_{MAX}			±100	
			LM4040DIZ LM4040DIM3 LM4040DIM7 LM4040QDIM3	$T_A = T_J = 25°C$		±15		
				$T_A = T_J = T_{MIN}$ to T_{MAX}			±150	
			LM4040EIZ LM4040EIM3 LM4040EIM7 LM4040QEIM3	$T_A = T_J = 25°C$		±15		
				$T_A = T_J = T_{MIN}$ to T_{MAX}			±150	
		I_R = 100 μA				±15		

(1) Limits are 100% production tested at 25°C. Limits over temperature are ensured through correlation using Statistical Quality Control (SQC) methods. The limits are used to calculate AOQL.
(2) Typicals are at $T_J = 25°C$ and represent most likely parametric norm.
(3) The overtemperature limit for Reverse Breakdown Voltage Tolerance is defined as the room temperature Reverse Breakdown Voltage Tolerance ±[($\Delta V_R/\Delta T$)(maxΔT)(V_R)]. Where, $\Delta V_R/\Delta T$ is the V_R temperature coefficient, maxΔT is the maximum difference in temperature from the reference point of 25°C to T_{MIN} or T_{MAX}, and V_R is the reverse breakdown voltage. The total overtemperature tolerance for the different grades in the industrial temperature range where maxΔT = 65°C is shown below:
A-grade: ±0.75% = ±0.1% ±100 ppm/°C × 65°C
B-grade: ±0.85% = ±0.2% ±100 ppm/°C × 65°C
C-grade: ±1.15% = ±0.5% ±100 ppm/°C × 65°C
D-grade: ±1.98% = ±1.0% ±150 ppm/°C × 65°C
E-grade: ±2.98% = ±2.0% ±150 ppm/°C × 65°C
The total overtemperature tolerance for the different grades in the extended temperature range where max ΔT = 100 °C is shown below:
C-grade: ±1.5% = ±0.5% ±100 ppm/°C × 100°C
D-grade: ±2.5% = ±1.0% ±150 ppm/°C × 100°C
E-grade: ±3.5% = ±2.0% ±150 ppm/°C × 100°C
Therefore, as an example, the A-grade 2.5-V LM4040-N has an overtemperature Reverse Breakdown Voltage tolerance of ±2.5V × 0.75% = ±19 mV.

Copyright © 2000–2018, Texas Instruments Incorporated

Electrical Characteristics: 2.5-V LM4040-N V_R Tolerance Grades 'C', 'D', and 'E'; Temperature Grade 'I' (AEC Grade 3) (continued)

all other limits $T_A = T_J = 25°C$. The grades C, D and E designate initial Reverse Breakdown Voltage tolerances of ±0.5%, ±1% and ±2%, respectively.

PARAMETER		TEST CONDITIONS			MIN(1)	TYP(2)	MAX(1)	UNIT
$\Delta V_R/\Delta I_R$	Reverse Breakdown Voltage Change with Operating Current Change(4)	$I_{RMIN} \le I_R \le 1$ mA	LM4040CIZ LM4040CIM3 LM4040CIM7 LM4040QCIM3	$T_A = T_J = 25°C$		0.3	0.8	mV
				$T_A = T_J = T_{MIN}$ to T_{MAX}			1	
			LM4040DIZ LM4040DIM3 LM4040DIM7 LM4040QDIM3	$T_A = T_J = 25°C$		0.3	1	
				$T_A = T_J = T_{MIN}$ to T_{MAX}			1.2	
			LM4040EIZ LM4040EIM3 LM4040EIM7 LM4040QEIM3	$T_A = T_J = 25°C$		0.3	1	
				$T_A = T_J = T_{MIN}$ to T_{MAX}			1.2	
		1 mA ≤ I_R ≤ 15 mA	LM4040CIZ LM4040CIM3 LM4040CIM7 LM4040QCIM3	$T_A = T_J = 25°C$		2.5	6	
				$T_A = T_J = T_{MIN}$ to T_{MAX}			8	
			LM4040DIZ LM4040DIM3 LM4040DIM7 LM4040QDIM3	$T_A = T_J = 25°C$		2.5	8	
				$T_A = T_J = T_{MIN}$ to T_{MAX}			10	
			LM4040EIZ LM4040EIM3 LM4040EIM7 LM4040QEIM3	$T_A = T_J = 25°C$		2.5	8	
				$T_A = T_J = T_{MIN}$ to T_{MAX}			10	
Z_R	Reverse Dynamic Impedance	I_R = 1 mA, f = 120 Hz $I_{AC} = 0.1\ I_R$	LM4040CIZ LM4040CIM3 LM4040CIM7 LM4040QCIM3			0.3	0.9	Ω
			LM4040DIZ LM4040DIM3 LM4040DIM7 LM4040QDIM3			0.3	1.1	
			LM4040EIZ LM4040EIM3 LM4040EIM7 LM4040QEIM3			0.3	1.1	
e_N	Wideband Noise	I_R = 100 μA 10 Hz ≤ f ≤ 10 kHz				35		μV_{rms}
ΔV_R	Reverse Breakdown Voltage Long Term Stability	t = 1000 hrs T = 25°C ±0.1°C I_R = 100 μA				120		ppm
V_{HYST}	Thermal Hysteresis(5)	ΔT= −40°C to 125°C				0.08%		

(4) Load regulation is measured on pulse basis from no load to the specified load current. Output changes due to die temperature change must be taken into account separately.
(5) Thermal hysteresis is defined as the difference in voltage measured at 25°C after cycling to temperature –40°C and the 25°C measurement after cycling to temperature 125°C.

Copyright © 2000–2018, Texas Instruments Incorporated

6.10 Electrical Characteristics: 2.5-V LM4040-N V_R Tolerance Grades 'C', 'D', And 'E'; Temperature Grade 'E' (AEC Grade 1)

all other limits $T_A = T_J = 25°C$. The grades C, D and E designate initial Reverse Breakdown Voltage tolerances of ±0.5%, ±1% and ±2%, respectively.

PARAMETER		TEST CONDITIONS			MIN(1)	TYP(2)	MAX(1)	UNIT
V_R	Reverse Breakdown Voltage	I_R = 100 μA				2.5		V
V_R	Reverse Breakdown Voltage Tolerance(3)	I_R = 100 μA	LM4040CEM3 LM4040QCEM3	$T_A = T_J = 25°C$			±12	mV
				$T_A = T_J = T_{MIN}$ to T_{MAX}			±38	
			LM4040DEM3 LM4040QDEM3	$T_A = T_J = 25°C$			±25	
				$T_A = T_J = T_{MIN}$ to T_{MAX}			±63	
			LM4040EEM3 LM4040QEEM3	$T_A = T_J = 25°C$			±50	
				$T_A = T_J = T_{MIN}$ to T_{MAX}			±88	
I_{RMIN}	Minimum Operating Current		LM4040CEM3 LM4040QCEM3	$T_A = T_J = 25°C$		45	60	μA
				$T_A = T_J = T_{MIN}$ to T_{MAX}			68	
			LM4040DEM3 LM4040QDEM3	$T_A = T_J = 25°C$		45	65	
				$T_A = T_J = T_{MIN}$ to T_{MAX}			73	
			LM4040EEM3 LM4040QEEM3	$T_A = T_J = 25°C$		45	65	
				$T_A = T_J = T_{MIN}$ to T_{MAX}			73	
$\Delta V_R/\Delta T$	Average Reverse Breakdown Voltage Temperature Coefficient(3)	I_R = 10 mA				±20		ppm/°C
		I_R = 1 mA	LM4040CEM3 LM4040QCEM3	$T_A = T_J = 25°C$		±15		
				$T_A = T_J = T_{MIN}$ to T_{MAX}			±100	
			LM4040DEM3 LM4040QDEM3	$T_A = T_J = 25°C$		±15		
				$T_A = T_J = T_{MIN}$ to T_{MAX}			±150	
			LM4040EEM3 LM4040QEEM3	$T_A = T_J = 25°C$		±15		
				$T_A = T_J = T_{MIN}$ to T_{MAX}			±150	
		I_R = 100 μA				±15		
$\Delta V_R/\Delta I_R$	Reverse Breakdown Voltage Change with Operating Current Change(4)	$I_{RMIN} \le I_R \le 1$ mA	LM4040CEM3 LM4040QCEM3	$T_A = T_J = 25°C$		0.3	0.8	mV
				$T_A = T_J = T_{MIN}$ to T_{MAX}			1	
			LM4040DEM3 LM4040QDEM3	$T_A = T_J = 25°C$		0.3	1	
				$T_A = T_J = T_{MIN}$ to T_{MAX}			1.2	
			LM4040EEM3 LM4040QEEM3	$T_A = T_J = 25°C$		0.3	1	
				$T_A = T_J = T_{MIN}$ to T_{MAX}			1.2	
		1 mA ≤ I_R ≤ 15 mA	LM4040CEM3 LM4040QCEM3	$T_A = T_J = 25°C$		2.5	6	
				$T_A = T_J = T_{MIN}$ to T_{MAX}			8	
			LM4040DEM3 LM4040QDEM3	$T_A = T_J = 25°C$		2.5	8	
				$T_A = T_J = T_{MIN}$ to T_{MAX}			10	
			LM4040EEM3 LM4040QEEM3	$T_A = T_J = 25°C$		2.5	8	
				$T_A = T_J = T_{MIN}$ to T_{MAX}			10	

(1) Limits are 100% production tested at 25°C. Limits over temperature are ensured through correlation using Statistical Quality Control (SQC) methods. The limits are used to calculate AOQL.
(2) Typicals are at $T_J = 25°C$ and represent most likely parametric norm.
(3) The overtemperature limit for Reverse Breakdown Voltage Tolerance is defined as the room temperature Reverse Breakdown Voltage Tolerance ±[($\Delta V_R/\Delta T$)(maxΔT)(V_R)]. Where, $\Delta V_R/\Delta T$ is the V_R temperature coefficient, maxΔT is the maximum difference in temperature from the reference point of 25°C to T_{MIN} or T_{MAX}, and V_R is the reverse breakdown voltage. The total overtemperature tolerance for the different grades in the industrial temperature range where maxΔT = 65°C is shown below:
A-grade: ±0.75% = ±0.1% ±100 ppm/°C × 65°C
B-grade: ±0.85% = ±0.2% ±100 ppm/°C × 65°C
C-grade: ±1.15% = ±0.5% ±100 ppm/°C × 65°C
D-grade: ±1.98% = ±1.0% ±150 ppm/°C × 65°C
E-grade: ±2.98% = ±2.0% ±150 ppm/°C × 65°C
The total overtemperature tolerance for the different grades in the extended temperature range where max ΔT = 100 °C is shown below:
C-grade: ±1.5% = ±0.5% ±100 ppm/°C × 100°C
D-grade: ±2.5% = ±1.0% ±150 ppm/°C × 100°C
E-grade: ±3.5% = ±2.0% ±150 ppm/°C × 100°C
Therefore, as an example, the A-grade 2.5-V LM4040-N has an overtemperature Reverse Breakdown Voltage tolerance of ±2.5V × 0.75% = ±19 mV.
(4) Load regulation is measured on pulse basis from no load to the specified load current. Output changes due to die temperature change must be taken into account separately.

Copyright © 2000–2018, Texas Instruments Incorporated

Electrical Characteristics: 2.5-V LM4040-N V_R Tolerance Grades 'C', 'D', And 'E'; Temperature Grade 'E' (AEC Grade 1) (continued)

all other limits $T_A = T_J = 25°C$. The grades C, D and E designate initial Reverse Breakdown Voltage tolerances of ±0.5%, ±1% and ±2%, respectively.

PARAMETER		TEST CONDITIONS		MIN(1)	TYP(2)	MAX(1)	UNIT
Z_R	Reverse Dynamic Impedance	I_R = 1 mA, f = 120 Hz, I_{AC} = 0.1 I_R	LM4040CEM3 LM4040QCEM3		0.3	0.9	Ω
			LM4040DEM3 LM4040QDEM3		0.3	1.1	
			LM4040EEM3 LM4040QEEM3		0.3	1.1	
e_N	Wideband Noise	I_R = 100 μA 10 Hz ≤ f ≤ 10 kHz			35		μV_{rms}
ΔV_R	Reverse Breakdown Voltage Long Term Stability	t = 1000 hrs T = 25°C ±0.1°C I_R = 100 μA			120		ppm
V_{HYST}	Thermal Hysteresis(5)	ΔT= −40°C to 125°C			0.08%		

(5) Thermal hysteresis is defined as the difference in voltage measured at +25°C after cycling to temperature -40°C and the 25°C measurement after cycling to temperature 125°C.

Copyright © 2000–2018, Texas Instruments Incorporated

6.11 Electrical Characteristics: 3-V LM4040-N V_R Tolerance Grades 'A' And 'B'; Temperature Grade 'I'

all other limits $T_A = T_J = 25°C$. The grades A and B designate initial Reverse Breakdown Voltage tolerances of ±0.1% and ±0.2%, respectively.

PARAMETER		TEST CONDITIONS			MIN(1)	TYP(2)	MAX(1)	UNIT
V_R	Reverse Breakdown Voltage	I_R = 100 µA				3		V
V_R	Reverse Breakdown Voltage Tolerance(3)	I_R = 100 µA	LM4040AIM3 LM4040AIZ	$T_A = T_J = 25°C$			±3	mV
				$T_A = T_J = T_{MIN}$ to T_{MAX}			±22	
			LM4040BIM3 LM4040BIZ LM4040BIM7	$T_A = T_J = 25°C$			±6	
				$T_A = T_J = T_{MIN}$ to T_{MAX}			±26	
I_{RMIN}	Minimum Operating Current		$T_A = T_J = 25°C$			47	62	µA
			$T_A = T_J = T_{MIN}$ to T_{MAX}				67	
$\Delta V_R/\Delta T$	Average Reverse Breakdown Voltage Temperature Coefficient(3)	I_R = 10 mA				±20		ppm/°C
		I_R = 1 mA	$T_A = T_J = 25°C$			±15		
			$T_A = T_J = T_{MIN}$ to T_{MAX}				±100	
		I_R = 100 µA				±15		
$\Delta V_R/\Delta I_R$	Reverse Breakdown Voltage Change with Operating Current Change(4)	$I_{RMIN} \le I_R \le$ 1 mA	$T_A = T_J = 25°C$			0.6	0.8	mV
			$T_A = T_J = T_{MIN}$ to T_{MAX}				1.1	
		1 mA ≤ $I_R \le$ 15 mA	$T_A = T_J = 25°C$			2.7	6	
			$T_A = T_J = T_{MIN}$ to T_{MAX}				9	
Z_R	Reverse Dynamic Impedance	I_R = 1 mA, f = 120 Hz, $I_{AC} = 0.1\ I_R$				0.4	0.9	Ω
e_N	Wideband Noise	I_R = 100 µA 10 Hz ≤ f ≤ 10 kHz				35		μV_{rms}
ΔV_R	Reverse Breakdown Voltage Long Term Stability	t = 1000 hrs T = 25°C ±0.1°C I_R = 100 µA				120		ppm
V_{HYST}	Thermal Hysteresis(5)	ΔT = −40°C to 125°C				0.08%		

(1) Limits are 100% production tested at 25°C. Limits over temperature are ensured through correlation using Statistical Quality Control (SQC) methods. The limits are used to calculate AOQL.
(2) Typicals are at T_J = 25°C and represent most likely parametric norm.
(3) The overtemperature limit for Reverse Breakdown Voltage Tolerance is defined as the room temperature Reverse Breakdown Voltage Tolerance ±[($\Delta V_R/\Delta T$)(maxΔT)(V_R)]. Where, $\Delta V_R/\Delta T$ is the V_R temperature coefficient, maxΔT is the maximum difference in temperature from the reference point of 25°C to T_{MIN} or T_{MAX}, and V_R is the reverse breakdown voltage. The total overtemperature tolerance for the different grades in the industrial temperature range where maxΔT = 65°C is shown below:
A-grade: ±0.75% = ±0.1% ±100 ppm/°C × 65°C
B-grade: ±0.85% = ±0.2% ±100 ppm/°C × 65°C
C-grade: ±1.15% = ±0.5% ±100 ppm/°C × 65°C
D-grade: ±1.98% = ±1.0% ±150 ppm/°C × 65°C
E-grade: ±2.98% = ±2.0% ±150 ppm/°C × 65°C
The total overtemperature tolerance for the different grades in the extended temperature range where max ΔT = 100 °C is shown below:
C-grade: ±1.5% = ±0.5% ±100 ppm/°C × 100°C
D-grade: ±2.5% = ±1.0% ±150 ppm/°C × 100°C
E-grade: ±3.5% = ±2.0% ±150 ppm/°C × 100°C
Therefore, as an example, the A-grade 2.5-V LM4040-N has an overtemperature Reverse Breakdown Voltage tolerance of ±2.5V × 0.75% = ±19 mV.
(4) Load regulation is measured on pulse basis from no load to the specified load current. Output changes due to die temperature change must be taken into account separately.
(5) Thermal hysteresis is defined as the difference in voltage measured at +25°C after cycling to temperature -40°C and the 25°C measurement after cycling to temperature 125°C.

Copyright © 2000–2018, Texas Instruments Incorporated

6.12 Electrical Characteristics: 3-V LM4040-N V_R Tolerance Grades 'C', 'D', And 'E'; Temperature Grade 'I'

all other limits $T_A = T_J = 25°C$. The grades C, D and E designate initial Reverse Breakdown Voltage tolerances of ±0.5%, ±1% and ±2%, respectively.

PARAMETER		TEST CONDITIONS			MIN(1)	TYP(2)	MAX(1)	UNIT
V_R	Reverse Breakdown Voltage	I_R = 100 μA				3		V
V_R	Reverse Breakdown Voltage Tolerance(3)	I_R = 100 μA	LM4040CIM3 LM4040CIZ LM4040CIM7	$T_A = T_J = 25°C$			±15	mV
				$T_A = T_J = T_{MIN}$ to T_{MAX}			±34	
			LM4040DIM3 LM4040DIZ LM4040DIM7	$T_A = T_J = 25°C$			±30	
				$T_A = T_J = T_{MIN}$ to T_{MAX}			±59	
			LM4040EIM7 LM4040EIZ	$T_A = T_J = 25°C$			±60	
				$T_A = T_J = T_{MIN}$ to T_{MAX}			±89	
I_{RMIN}	Minimum Operating Current		LM4040CIM3 LM4040CIZ LM4040CIM7	$T_A = T_J = 25°C$		45	60	μA
				$T_A = T_J = T_{MIN}$ to T_{MAX}			65	
			LM4040DIM3 LM4040DIZ LM4040DIM7	$T_A = T_J = 25°C$		45	65	
				$T_A = T_J = T_{MIN}$ to T_{MAX}			70	
			LM4040EIM7 LM4040EIZ	$T_A = T_J = 25°C$		45	65	
				$T_A = T_J = T_{MIN}$ to T_{MAX}			70	
$\Delta V_R/\Delta T$	Average Reverse Breakdown Voltage Temperature Coefficient(3)	I_R = 10 mA				±20		ppm/°C
		I_R = 1 mA	LM4040CIM3 LM4040CIZ LM4040CIM7	$T_A = T_J = 25°C$		±15		
				$T_A = T_J = T_{MIN}$ to T_{MAX}			±100	
			LM4040DIM3 LM4040DIZ LM4040DIM7	$T_A = T_J = 25°C$		±15		
				$T_A = T_J = T_{MIN}$ to T_{MAX}			±150	
			LM4040EIM7 LM4040EIZ	$T_A = T_J = 25°C$		±15		
				$T_A = T_J = T_{MIN}$ to T_{MAX}			±150	
		I_R = 100 μA				±15		

(1) Limits are 100% production tested at 25°C. Limits over temperature are ensured through correlation using Statistical Quality Control (SQC) methods. The limits are used to calculate AOQL.
(2) Typicals are at $T_J = 25°C$ and represent most likely parametric norm.
(3) The overtemperature limit for Reverse Breakdown Voltage Tolerance is defined as the room temperature Reverse Breakdown Voltage Tolerance ±[($\Delta V_R/\Delta T$)(maxΔT)(V_R)]. Where, $\Delta V_R/\Delta T$ is the V_R temperature coefficient, maxΔT is the maximum difference in temperature from the reference point of 25°C to T_{MIN} or T_{MAX}, and V_R is the reverse breakdown voltage. The total overtemperature tolerance for the different grades in the industrial temperature range where maxΔT = 65°C is shown below:
A-grade: ±0.75% = ±0.1% ±100 ppm/°C × 65°C
B-grade: ±0.85% = ±0.2% ±100 ppm/°C × 65°C
C-grade: ±1.15% = ±0.5% ±100 ppm/°C × 65°C
D-grade: ±1.98% = ±1.0% ±150 ppm/°C × 65°C
E-grade: ±2.98% = ±2.0% ±150 ppm/°C × 65°C
The total overtemperature tolerance for the different grades in the extended temperature range where max ΔT = 100 °C is shown below:
C-grade: ±1.5% = ±0.5% ±100 ppm/°C × 100°C
D-grade: ±2.5% = ±1.0% ±150 ppm/°C × 100°C
E-grade: ±3.5% = ±2.0% ±150 ppm/°C × 100°C
Therefore, as an example, the A-grade 2.5-V LM4040-N has an overtemperature Reverse Breakdown Voltage tolerance of ±2.5V × 0.75% = ±19 mV.

Copyright © 2000–2018, Texas Instruments Incorporated

Electrical Characteristics: 3-V LM4040-N V_R Tolerance Grades 'C', 'D', And 'E'; Temperature Grade 'I' (continued)

all other limits $T_A = T_J = 25°C$. The grades C, D and E designate initial Reverse Breakdown Voltage tolerances of ±0.5%, ±1% and ±2%, respectively.

PARAMETER		TEST CONDITIONS			MIN(1)	TYP(2)	MAX(1)	UNIT
$\Delta V_R/\Delta I_R$	Reverse Breakdown Voltage Change with Operating Current Change(4)	$I_{RMIN} \le I_R \le 1$ mA	LM4040CIM3 LM4040CIZ LM4040CIM7	$T_A = T_J = 25°C$		0.4	0.8	mV
				$T_A = T_J = T_{MIN}$ to T_{MAX}			1.1	
			LM4040DIM3 LM4040DIZ LM4040DIM7	$T_A = T_J = 25°C$		0.4	1.1	
				$T_A = T_J = T_{MIN}$ to T_{MAX}			1.3	
			LM4040EIM7 LM4040EIZ	$T_A = T_J = 25°C$		0.4	1.1	
				$T_A = T_J = T_{MIN}$ to T_{MAX}			1.3	
		1 mA ≤ I_R ≤ 15 mA	LM4040CIM3 LM4040CIZ LM4040CIM7	$T_A = T_J = 25°C$		2.7	6	
				$T_A = T_J = T_{MIN}$ to T_{MAX}			9	
			LM4040DIM3 LM4040DIZ LM4040DIM7	$T_A = T_J = 25°C$		2.7	8	
				$T_A = T_J = T_{MIN}$ to T_{MAX}			11	
			LM4040EIM7 LM4040EIZ	$T_A = T_J = 25°C$		2.7	8	
				$T_A = T_J = T_{MIN}$ to T_{MAX}			11	
Z_R	Reverse Dynamic Impedance	I_R = 1 mA, f = 120 Hz $I_{AC} = 0.1\ I_R$	LM4040CIM3 LM4040CIZ LM4040CIM7			0.4	0.9	Ω
			LM4040DIM3 LM4040DIZ LM4040DIM7			0.4	1.2	
			LM4040EIM7 LM4040EIZ			0.4	1.2	
e_N	Wideband Noise	I_R = 100 μA 10 Hz ≤ f ≤ 10 kHz				35		μV_{rms}
ΔV_R	Reverse Breakdown Voltage Long Term Stability	t = 1000 hrs T = 25°C ±0.1°C I_R = 100 μA				120		ppm
V_{HYST}	Thermal Hysteresis(5)	ΔT = −40°C to 125°C				0.08%		

(4) Load regulation is measured on pulse basis from no load to the specified load current. Output changes due to die temperature change must be taken into account separately.
(5) Thermal hysteresis is defined as the difference in voltage measured at +25°C after cycling to temperature -40°C and the 25°C measurement after cycling to temperature 125°C.

Copyright © 2000–2018, Texas Instruments Incorporated

6.13 Electrical Characteristics: 3-V LM4040-N V_R Tolerance Grades 'C', 'D', And 'E'; Temperature Grade 'E'

all other limits $T_A = T_J = 25°C$. The grades C, D and E designate initial Reverse Breakdown Voltage tolerances of ±0.5%, ±1% and ±2%, respectively.

PARAMETER		TEST CONDITIONS			MIN(1)	TYP(2)	MAX(1)	UNIT
V_R	Reverse Breakdown Voltage	I_R = 100 µA				3		V
	Reverse Breakdown Voltage Tolerance(3)	I_R = 100 µA	LM4040CEM3	$T_A = T_J = 25°C$			±15	mV
				$T_A = T_J = T_{MIN}$ to T_{MAX}			±45	
			LM4040DEM3	$T_A = T_J = 25°C$			±30	
				$T_A = T_J = T_{MIN}$ to T_{MAX}			±75	
			LM4040EEM3	$T_A = T_J = 25°C$			±60	
				$T_A = T_J = T_{MIN}$ to T_{MAX}			±105	
I_{RMIN}	Minimum Operating Current		LM4040CEM3	$T_A = T_J = 25°C$		47	62	µA
				$T_A = T_J = T_{MIN}$ to T_{MAX}			70	
			LM4040DEM3	$T_A = T_J = 25°C$		47	67	
				$T_A = T_J = T_{MIN}$ to T_{MAX}			75	
			LM4040EEM3	$T_A = T_J = 25°C$		47	67	
				$T_A = T_J = T_{MIN}$ to T_{MAX}			75	
$\Delta V_R/\Delta T$	Average Reverse Breakdown Voltage Temperature Coefficient(3)	I_R = 10 mA				±20		ppm/°C
		I_R = 1 mA	LM4040CEM3	$T_A = T_J = 25°C$		±15		
				$T_A = T_J = T_{MIN}$ to T_{MAX}			±100	
			LM4040DEM3	$T_A = T_J = 25°C$		±15		
				$T_A = T_J = T_{MIN}$ to T_{MAX}			±150	
			LM4040EEM3	$T_A = T_J = 25°C$		±15		
				$T_A = T_J = T_{MIN}$ to T_{MAX}			±150	
		I_R = 100 µA				±15		
$\Delta V_R/\Delta I_R$	Reverse Breakdown Voltage Change with Operating Current Change(4)	$I_{RMIN} \le I_R \le 1$ mA	LM4040CEM3	$T_A = T_J = 25°C$		0.4	0.8	mV
				$T_A = T_J = T_{MIN}$ to T_{MAX}			1.1	
			LM4040DEM3	$T_A = T_J = 25°C$		0.4	1.1	
				$T_A = T_J = T_{MIN}$ to T_{MAX}			1.3	
			LM4040EEM3	$T_A = T_J = 25°C$		0.4	1.1	
				$T_A = T_J = T_{MIN}$ to T_{MAX}			1.3	
		1 mA ≤ I_R ≤ 15 mA	LM4040CEM3	$T_A = T_J = 25°C$		2.7	6.0	
				$T_A = T_J = T_{MIN}$ to T_{MAX}			9	
			LM4040DEM3	$T_A = T_J = 25°C$		2.7	8	
				$T_A = T_J = T_{MIN}$ to T_{MAX}			11.0	
			LM4040EEM3	$T_A = T_J = 25°C$		2.7	8	
				$T_A = T_J = T_{MIN}$ to T_{MAX}			11.0	

(1) Limits are 100% production tested at 25°C. Limits over temperature are ensured through correlation using Statistical Quality Control (SQC) methods. The limits are used to calculate AOQL.
(2) Typicals are at $T_J = 25°C$ and represent most likely parametric norm.
(3) The (overtemperature) limit for Reverse Breakdown Voltage Tolerance is defined as the room temperature Reverse Breakdown Voltage Tolerance ±[($\Delta V_R/\Delta T$)(maxΔT)(V_R)]. Where, $\Delta V_R/\Delta T$ is the V_R temperature coefficient, maxΔT is the maximum difference in temperature from the reference point of 25°C to T_{MIN} or T_{MAX}, and V_R is the reverse breakdown voltage. The total overtemperature tolerance for the different grades in the industrial temperature range where maxΔT = 65°C is shown below:
A-grade: ±0.75% = ±0.1% ±100 ppm/°C × 65°C
B-grade: ±0.85% = ±0.2% ±100 ppm/°C × 65°C
C-grade: ±1.15% = ±0.5% ±100 ppm/°C × 65°C
D-grade: ±1.98% = ±1.0% ±150 ppm/°C × 65°C
E-grade: ±2.98% = ±2.0% ±150 ppm/°C × 65°C
The total overtemperature tolerance for the different grades in the extended temperature range where max ΔT = 100 °C is shown below:
C-grade: ±1.5% = ±0.5% ±100 ppm/°C × 100°C
D-grade: ±2.5% = ±1.0% ±150 ppm/°C × 100°C
E-grade: ±3.5% = ±2.0% ±150 ppm/°C × 100°C
Therefore, as an example, the A-grade 2.5-V LM4040-N has an overtemperature Reverse Breakdown Voltage tolerance of ±2.5V × 0.75% = ±19 mV.
(4) Load regulation is measured on pulse basis from no load to the specified load current. Output changes due to die temperature change must be taken into account separately.

Copyright © 2000–2018, Texas Instruments Incorporated

Electrical Characteristics: 3-V LM4040-N V_R Tolerance Grades 'C', 'D', And 'E'; Temperature Grade 'E' (continued)

all other limits $T_A = T_J = 25°C$. The grades C, D and E designate initial Reverse Breakdown Voltage tolerances of ±0.5%, ±1% and ±2%, respectively.

PARAMETER		TEST CONDITIONS		MIN(1)	TYP(2)	MAX(1)	UNIT
Z_R	Reverse Dynamic Impedance	I_R = 1 mA, f = 120 Hz, I_{AC} = 0.1 I_R	LM4040CEM3		0.4	0.9	Ω
			LM4040DEM3		0.4	1.2	
			LM4040EEM3		0.4	1.2	
e_N	Wideband Noise	I_R = 100 μA 10 Hz ≤ f ≤ 10 kHz			35		μV_{rms}
ΔV_R	Reverse Breakdown Voltage Long Term Stability	t = 1000 hrs T = 25°C ±0.1°C I_R = 100 μA			120		ppm
V_{HYST}	Thermal Hysteresis(5)	ΔT = −40°C to 125°C			0.08%		

(5) Thermal hysteresis is defined as the difference in voltage measured at +25°C after cycling to temperature -40°C and the 25°C measurement after cycling to temperature 125°C.

6.14 Electrical Characteristics: 4.1-V LM4040-N V_R Tolerance Grades 'A' And 'B'; Temperature Grade 'I'

all other limits $T_A = T_J = 25°C$. The grades A and B designate initial Reverse Breakdown Voltage tolerances of ±0.1% and ±0.2%, respectively.

PARAMETER		TEST CONDITIONS			MIN(1)	TYP(2)	MAX(1)	UNIT
V_R	Reverse Breakdown Voltage	I_R = 100 μA				4.096		V
	Reverse Breakdown Voltage Tolerance(3)	I_R = 100 μA	LM4040AIM3 LM4040AIZ	$T_A = T_J = 25°C$			±4.1	mV
				$T_A = T_J = T_{MIN}$ to T_{MAX}			±31	
			LM4040BIM3 LM4040BIZ LM4040BIM7	$T_A = T_J = 25°C$			±8.2	
				$T_A = T_J = T_{MIN}$ to T_{MAX}			±35	
I_{RMIN}	Minimum Operating Current		$T_A = T_J = 25°C$			50	68	μA
			$T_A = T_J = T_{MIN}$ to T_{MAX}				73	
$\Delta V_R/\Delta T$	Average Reverse Breakdown Voltage Temperature Coefficient(3)	I_R = 10 mA				±30		ppm/°C
		I_R = 1 mA	$T_A = T_J = 25°C$			±20		
			$T_A = T_J = T_{MIN}$ to T_{MAX}				±100	
		I_R = 100 μA				±20		
$\Delta V_R/\Delta I_R$	Reverse Breakdown Voltage Change with Operating Current Change(4)	$I_{RMIN} \le I_R \le 1$ mA	$T_A = T_J = 25°C$			0.5	0.9	mV
			$T_A = T_J = T_{MIN}$ to T_{MAX}				1.2	
		1 mA ≤ I_R ≤ 15 mA	$T_A = T_J = 25°C$			3	7	
			$T_A = T_J = T_{MIN}$ to T_{MAX}				10	

(1) Limits are 100% production tested at 25°C. Limits over temperature are ensured through correlation using Statistical Quality Control (SQC) methods. The limits are used to calculate AOQL.
(2) Typicals are at T_J = 25°C and represent most likely parametric norm.
(3) The (overtemperature) limit for Reverse Breakdown Voltage Tolerance is defined as the room temperature Reverse Breakdown Voltage Tolerance ±[($\Delta V_R/\Delta T$)(maxΔT)(V_R)]. Where, $\Delta V_R/\Delta T$ is the V_R temperature coefficient, maxΔT is the maximum difference in temperature from the reference point of 25°C to T_{MIN} or T_{MAX}, and V_R is the reverse breakdown voltage. The total overtemperature tolerance for the different grades in the industrial temperature range where maxΔT = 65°C is shown below:
A-grade: ±0.75% = ±0.1% ±100 ppm/°C × 65°C
B-grade: ±0.85% = ±0.2% ±100 ppm/°C × 65°C
C-grade: ±1.15% = ±0.5% ±100 ppm/°C × 65°C
D-grade: ±1.98% = ±1.0% ±150 ppm/°C × 65°C
E-grade: ±2.98% = ±2.0% ±150 ppm/°C × 65°C
The total overtemperature tolerance for the different grades in the extended temperature range where max ΔT = 100 °C is shown below:
C-grade: ±1.5% = ±0.5% ±100 ppm/°C × 100°C
D-grade: ±2.5% = ±1.0% ±150 ppm/°C × 100°C
E-grade: ±3.5% = ±2.0% ±150 ppm/°C × 100°C
Therefore, as an example, the A-grade 2.5-V LM4040-N has an overtemperature Reverse Breakdown Voltage tolerance of ±2.5V × 0.75% = ±19 mV.
(4) Load regulation is measured on pulse basis from no load to the specified load current. Output changes due to die temperature change must be taken into account separately.

Copyright © 2000–2018, Texas Instruments Incorporated

Electrical Characteristics: 4.1-V LM4040-N V_R Tolerance Grades 'A' And 'B'; Temperature Grade 'I' (continued)

all other limits $T_A = T_J = 25°C$. The grades A and B designate initial Reverse Breakdown Voltage tolerances of ±0.1% and ±0.2%, respectively.

PARAMETER		TEST CONDITIONS		MIN(1)	TYP(2)	MAX(1)	UNIT
Z_R	Reverse Dynamic Impedance	I_R = 1 mA, f = 120 Hz, I_{AC} = 0.1 I_R			0.5	1	Ω
e_N	Wideband Noise	I_R = 100 μA 10 Hz ≤ f ≤ 10 kHz			80		μV_{rms}
ΔV_R	Reverse Breakdown Voltage Long Term Stability	t = 1000 hrs T = 25°C ±0.1°C I_R = 100 μA			120		ppm
V_{HYST}	Thermal Hysteresis(5)	ΔT = −40°C to 125°C			0.08%		

(5) Thermal hysteresis is defined as the difference in voltage measured at +25°C after cycling to temperature -40°C and the 25°C measurement after cycling to temperature 125°C.

6.15 Electrical Characteristics: 4.1-V LM4040-N V_R Tolerance Grades 'C' and 'D'; Temperature Grade 'I'

all other limits $T_A = T_J = 25°C$. The grades C and D designate initial Reverse Breakdown Voltage tolerances of ±0.5% and ±1%, respectively.

PARAMETER		TEST CONDITIONS			MIN(1)	TYP(2)	MAX(1)	UNIT
V_R	Reverse Breakdown Voltage	I_R = 100 μA				4.096		V
V_R	Reverse Breakdown Voltage Tolerance(3)	I_R = 100 μA	LM4040CIM3 LM4040CIZ LM4040CIM7	$T_A = T_J = 25°C$			±20	mV
				$T_A = T_J = T_{MIN}$ to T_{MAX}			±47	
			LM4040DIM3 LM4040DIZ LM4040DIM7	$T_A = T_J = 25°C$			±41	
				$T_A = T_J = T_{MIN}$ to T_{MAX}			±81	
I_{RMIN}	Minimum Operating Current		LM4040CIM3 LM4040CIZ LM4040CIM7	$T_A = T_J = 25°C$		50	68	μA
				$T_A = T_J = T_{MIN}$ to T_{MAX}			73	
			LM4040DIM3 LM4040DIZ LM4040DIM7	$T_A = T_J = 25°C$		50	73	
				$T_A = T_J = T_{MIN}$ to T_{MAX}			78	
$\Delta V_R/\Delta T$	Average Reverse Breakdown Voltage Temperature Coefficient(3)	I_R = 10 mA				±30		ppm/°C
		I_R = 1 mA	LM4040CIM3 LM4040CIZ LM4040CIM7	$T_A = T_J = 25°C$		±20		
				$T_A = T_J = T_{MIN}$ to T_{MAX}			±100	
			LM4040DIM3 LM4040DIZ LM4040DIM7	$T_A = T_J = 25°C$		±20		
				$T_A = T_J = T_{MIN}$ to T_{MAX}			±150	
		I_R = 100 μA				±20		

(1) Limits are 100% production tested at 25°C. Limits over temperature are ensured through correlation using Statistical Quality Control (SQC) methods. The limits are used to calculate AOQL.
(2) Typicals are at T_J = 25°C and represent most likely parametric norm.
(3) The (overtemperature) limit for Reverse Breakdown Voltage Tolerance is defined as the room temperature Reverse Breakdown Voltage Tolerance ±[($\Delta V_R/\Delta T$)(maxΔT)(V_R)]. Where, $\Delta V_R/\Delta T$ is the V_R temperature coefficient, maxΔT is the maximum difference in temperature from the reference point of 25°C to T_{MIN} or T_{MAX}, and V_R is the reverse breakdown voltage. The total overtemperature tolerance for the different grades in the industrial temperature range where maxΔT = 65°C is shown below:
A-grade: ±0.75% = ±0.1% ±100 ppm/°C × 65°C
B-grade: ±0.85% = ±0.2% ±100 ppm/°C × 65°C
C-grade: ±1.15% = ±0.5% ±100 ppm/°C × 65°C
D-grade: ±1.98% = ±1.0% ±150 ppm/°C × 65°C
E-grade: ±2.98% = ±2.0% ±150 ppm/°C × 65°C
The total overtemperature tolerance for the different grades in the extended temperature range where max ΔT = 100 °C is shown below:
C-grade: ±1.5% = ±0.5% ±100 ppm/°C × 100°C
D-grade: ±2.5% = ±1.0% ±150 ppm/°C × 100°C
E-grade: ±3.5% = ±2.0% ±150 ppm/°C × 100°C
Therefore, as an example, the A-grade 2.5-V LM4040-N has an overtemperature Reverse Breakdown Voltage tolerance of ±2.5V × 0.75% = ±19 mV.

Copyright © 2000–2018, Texas Instruments Incorporated

Electrical Characteristics: 4.1-V LM4040-N V_R Tolerance Grades 'C' and 'D'; Temperature Grade 'I' (continued)

all other limits $T_A = T_J = 25°C$. The grades C and D designate initial Reverse Breakdown Voltage tolerances of ±0.5% and ±1%, respectively.

PARAMETER		TEST CONDITIONS			MIN(1)	TYP(2)	MAX(1)	UNIT
$\Delta V_R/\Delta I_R$	Reverse Breakdown Voltage Change with Operating Current Change(4)	$I_{RMIN} \le I_R \le 1$ mA	LM4040CIM3 LM4040CIZ LM4040CIM7	$T_A = T_J = 25°C$		0.5	0.9	mV
				$T_A = T_J = T_{MIN}$ to T_{MAX}			1.2	
			LM4040DIM3 LM4040DIZ LM4040DIM7	$T_A = T_J = 25°C$		0.5	1.2	
				$T_A = T_J = T_{MIN}$ to T_{MAX}			1.5	
		1 mA ≤ I_R ≤ 15 mA	LM4040CIM3 LM4040CIZ LM4040CIM7	$T_A = T_J = 25°C$		3	7	
				$T_A = T_J = T_{MIN}$ to T_{MAX}			10	
			LM4040DIM3 LM4040DIZ LM4040DIM7	$T_A = T_J = 25°C$		3	9	
				$T_A = T_J = T_{MIN}$ to T_{MAX}			13	
Z_R	Reverse Dynamic Impedance	I_R = 1 mA, f = 120 Hz, I_{AC} = 0.1 I_R	LM4040CIM3 LM4040CIZ LM4040CIM7			0.5	1	Ω
			LM4040DIM3 LM4040DIZ LM4040DIM7			0.5	1.3	
e_N	Wideband Noise	I_R = 100 μA 10 Hz ≤ f ≤ 10 kHz				80		μV_{rms}
ΔV_R	Reverse Breakdown Voltage Long Term Stability	t = 1000 hrs T = 25°C ±0.1°C I_R = 100 μA				120		ppm
V_{HYST}	Thermal Hysteresis(5)	ΔT = −40°C to 125°C				0.08%		

(4) Load regulation is measured on pulse basis from no load to the specified load current. Output changes due to die temperature change must be taken into account separately.
(5) Thermal hysteresis is defined as the difference in voltage measured at +25°C after cycling to temperature -40°C and the 25°C measurement after cycling to temperature 125°C.

6.16 Electrical Characteristics: 5-V LM4040-N V_R Tolerance Grades 'A' And 'B'; Temperature Grade 'I'

all other limits $T_A = T_J = 25°C$. The grades A and B designate initial Reverse Breakdown Voltage tolerances of ±0.1% and ±0.2%, respectively.

PARAMETER		TEST CONDITIONS			MIN(1)	TYP(2)	MAX(1)	UNIT
V_R	Reverse Breakdown Voltage	I_R = 100 μA				5		V
	Reverse Breakdown Voltage Tolerance(3)	I_R = 100 μA	LM4040AIM3 LM4040AIZ	$T_A = T_J = 25°C$			±5	mV
				$T_A = T_J = T_{MIN}$ to T_{MAX}			±38	
			LM4040BIM3 LM4040BIZ LM4040BIM7	$T_A = T_J = 25°C$			±10	
				$T_A = T_J = T_{MIN}$ to T_{MAX}			±43	

(1) Limits are 100% production tested at 25°C. Limits over temperature are ensured through correlation using Statistical Quality Control (SQC) methods. The limits are used to calculate AOQL.
(2) Typicals are at $T_J = 25°C$ and represent most likely parametric norm.
(3) The (overtemperature) limit for Reverse Breakdown Voltage Tolerance is defined as the room temperature Reverse Breakdown Voltage Tolerance ±[($\Delta V_R/\Delta T$)(maxΔT)(V_R)]. Where, $\Delta V_R/\Delta T$ is the V_R temperature coefficient, maxΔT is the maximum difference in temperature from the reference point of 25°C to T_{MIN} or T_{MAX}, and V_R is the reverse breakdown voltage. The total overtemperature tolerance for the different grades in the industrial temperature range where maxΔT = 65°C is shown below:
A-grade: ±0.75% = ±0.1% ±100 ppm/°C × 65°C
B-grade: ±0.85% = ±0.2% ±100 ppm/°C × 65°C
C-grade: ±1.15% = ±0.5% ±100 ppm/°C × 65°C
D-grade: ±1.98% = ±1.0% ±150 ppm/°C × 65°C
E-grade: ±2.98% = ±2.0% ±150 ppm/°C × 65°C
The total overtemperature tolerance for the different grades in the extended temperature range where max ΔT = 100 °C is shown below:
C-grade: ±1.5% = ±0.5% ±100 ppm/°C × 100°C
D-grade: ±2.5% = ±1.0% ±150 ppm/°C × 100°C
E-grade: ±3.5% = ±2.0% ±150 ppm/°C × 100°C
Therefore, as an example, the A-grade 2.5-V LM4040-N has an overtemperature Reverse Breakdown Voltage tolerance of ±2.5V × 0.75% = ±19 mV.

Copyright © 2000–2018, Texas Instruments Incorporated

Electrical Characteristics: 5-V LM4040-N V_R Tolerance Grades 'A' And 'B'; Temperature Grade 'I' (continued)

all other limits $T_A = T_J = 25°C$. The grades A and B designate initial Reverse Breakdown Voltage tolerances of ±0.1% and ±0.2%, respectively.

PARAMETER		TEST CONDITIONS		MIN(1)	TYP(2)	MAX(1)	UNIT
I_{RMIN}	Minimum Operating Current		$T_A = T_J = 25°C$		54	74	µA
			$T_A = T_J = T_{MIN}$ to T_{MAX}			80	
$\Delta V_R/\Delta T$	Average Reverse Breakdown Voltage Temperature Coefficient(3)	I_R = 10 mA			±30		ppm/°C
		I_R = 1 mA	$T_A = T_J = 25°C$		±20		
			$T_A = T_J = T_{MIN}$ to T_{MAX}			±100	
		I_R = 100 µA			±20		
$\Delta V_R/\Delta I_R$	Reverse Breakdown Voltage Change with Operating Current Change(4)	$I_{RMIN} \le I_R \le 1$ mA	$T_A = T_J = 25°C$		0.5	1	mV
			$T_A = T_J = T_{MIN}$ to T_{MAX}			1.4	
		1 mA ≤ I_R ≤ 15 mA	$T_A = T_J = 25°C$		3.5	8	
			$T_A = T_J = T_{MIN}$ to T_{MAX}			12	
Z_R	Reverse Dynamic Impedance	I_R = 1 mA, f = 120 Hz, I_{AC} = 0.1 I_R			0.5	1.1	Ω
e_N	Wideband Noise	I_R = 100 µA 10 Hz ≤ f ≤ 10 kHz			80		μV_{rms}
ΔV_R	Reverse Breakdown Voltage Long Term Stability	t = 1000 hrs T = 25°C ±0.1°C I_R = 100 µA			120		ppm
V_{HYST}	Thermal Hysteresis(5)	ΔT = −40°C to 125°C			0.08%		

(4) Load regulation is measured on pulse basis from no load to the specified load current. Output changes due to die temperature change must be taken into account separately.
(5) Thermal hysteresis is defined as the difference in voltage measured at +25°C after cycling to temperature -40°C and the 25°C measurement after cycling to temperature 125°C.

6.17 Electrical Characteristics: 5-V LM4040-N V_R Tolerance Grades 'C' And 'D'; Temperature Grade 'I'

all other limits $T_A = T_J = 25°C$. The grades C and D designate initial Reverse Breakdown Voltage tolerances of ±0.5% and ±1%, respectively.

PARAMETER		TEST CONDITIONS			MIN(1)	TYP(2)	MAX(1)	UNIT
V_R	Reverse Breakdown Voltage	I_R = 100 µA				5		V
	Reverse Breakdown Voltage Tolerance(3)	I_R = 100 µA	LM4040CIM3 LM4040CIZ LM4040CIM7	$T_A = T_J = 25°C$			±25	mV
				$T_A = T_J = T_{MIN}$ to T_{MAX}			±58	
			LM4040DIM3 LM4040DIZ LM4040DIM7	$T_A = T_J = 25°C$			±50	
				$T_A = T_J = T_{MIN}$ to T_{MAX}			±99	

(1) Limits are 100% production tested at 25°C. Limits over temperature are ensured through correlation using Statistical Quality Control (SQC) methods. The limits are used to calculate AOQL.
(2) Typicals are at $T_J = 25°C$ and represent most likely parametric norm.
(3) The (overtemperature) limit for Reverse Breakdown Voltage Tolerance is defined as the room temperature Reverse Breakdown Voltage Tolerance ±[($\Delta V_R/\Delta T$)(maxΔT)(V_R)]. Where, $\Delta V_R/\Delta T$ is the V_R temperature coefficient, maxΔT is the maximum difference in temperature from the reference point of 25°C to T_{MIN} or T_{MAX}, and V_R is the reverse breakdown voltage. The total overtemperature tolerance for the different grades in the industrial temperature range where maxΔT = 65°C is shown below:
A-grade: ±0.75% = ±0.1% ±100 ppm/°C × 65°C
B-grade: ±0.85% = ±0.2% ±100 ppm/°C × 65°C
C-grade: ±1.15% = ±0.5% ±100 ppm/°C × 65°C
D-grade: ±1.98% = ±1.0% ±150 ppm/°C × 65°C
E-grade: ±2.98% = ±2.0% ±150 ppm/°C × 65°C
The total overtemperature tolerance for the different grades in the extended temperature range where max ΔT = 100 °C is shown below:
C-grade: ±1.5% = ±0.5% ±100 ppm/°C × 100°C
D-grade: ±2.5% = ±1.0% ±150 ppm/°C × 100°C
E-grade: ±3.5% = ±2.0% ±150 ppm/°C × 100°C
Therefore, as an example, the A-grade 2.5-V LM4040-N has an overtemperature Reverse Breakdown Voltage tolerance of ±2.5V × 0.75% = ±19 mV.

Copyright © 2000–2018, Texas Instruments Incorporated

Electrical Characteristics: 5-V LM4040-N V_R Tolerance Grades 'C' And 'D'; Temperature Grade 'I' (continued)

all other limits $T_A = T_J = 25°C$. The grades C and D designate initial Reverse Breakdown Voltage tolerances of ±0.5% and ±1%, respectively.

PARAMETER		TEST CONDITIONS			MIN(1)	TYP(2)	MAX(1)	UNIT
I_{RMIN}	Minimum Operating Current		LM4040CIM3 LM4040CIZ LM4040CIM7	$T_A = T_J = 25°C$		54	74	µA
				$T_A = T_J = T_{MIN}$ to T_{MAX}			80	
			LM4040DIM3 LM4040DIZ LM4040DIM7	$T_A = T_J = 25°C$		54	79	
				$T_A = T_J = T_{MIN}$ to T_{MAX}			85	
$\Delta V_R/\Delta T$	Average Reverse Breakdown Voltage Temperature Coefficient(3)	I_R = 10 mA				±30		ppm/°C
		I_R = 1 mA	LM4040CIM3 LM4040CIZ LM4040CIM7	$T_A = T_J = 25°C$		±20		
				$T_A = T_J = T_{MIN}$ to T_{MAX}			±100	
			LM4040DIM3 LM4040DIZ LM4040DIM7	$T_A = T_J = 25°C$		±20		
				$T_A = T_J = T_{MIN}$ to T_{MAX}			±150	
		I_R = 100 µA				±20		
$\Delta V_R/\Delta I_R$	Reverse Breakdown Voltage Change with Operating Current Change(4)	$I_{RMIN} \le I_R \le 1$ mA	LM4040CIM3 LM4040CIZ LM4040CIM7	$T_A = T_J = 25°C$		0.5	1	mV
				$T_A = T_J = T_{MIN}$ to T_{MAX}			1.4	
			LM4040DIM3 LM4040DIZ LM4040DIM7	$T_A = T_J = 25°C$		0.5	1.3	
				$T_A = T_J = T_{MIN}$ to T_{MAX}			1.8	
		1 mA ≤ I_R ≤ 15 mA	LM4040CIM3 LM4040CIZ LM4040CIM7	$T_A = T_J = 25°C$		3.5	8	
				$T_A = T_J = T_{MIN}$ to T_{MAX}			12	
			LM4040DIM3 LM4040DIZ LM4040DIM7	$T_A = T_J = 25°C$		3.5	10	
				$T_A = T_J = T_{MIN}$ to T_{MAX}			15	
Z_R	Reverse Dynamic Impedance	I_R = 1 mA, f = 120 Hz, I_{AC} = 0.1 I_R	$T_A = T_J = 25°C$			0.5	1.1	Ω
			$T_A = T_J = T_{MIN}$ to T_{MAX}				1.5	
e_N	Wideband Noise	I_R = 100 µA 10 Hz ≤ f ≤ 10 kHz				80		μV_{rms}
ΔV_R	Reverse Breakdown Voltage Long Term Stability	t = 1000 hrs T = 25°C ±0.1°C I_R = 100 µA				120		ppm
V_{HYST}	Thermal Hysteresis(5)	ΔT = −40°C to 125°C				0.08%		

(4) Load regulation is measured on pulse basis from no load to the specified load current. Output changes due to die temperature change must be taken into account separately.
(5) Thermal hysteresis is defined as the difference in voltage measured at +25°C after cycling to temperature -40°C and the 25°C measurement after cycling to temperature 125°C.

Copyright © 2000–2018, Texas Instruments Incorporated

6.18 Electrical Characteristics: 5-V LM4040-N V_R Tolerance Grades 'C' And 'D'; Temperature Grade 'E'

all other limits $T_A = T_J = 25°C$. The grades C and D designate initial Reverse Breakdown Voltage tolerances of ±0.5% and ±1%, respectively.

PARAMETER		TEST CONDITIONS			MIN(1)	TYP	MAX(1)	UNIT
V_R	Reverse Breakdown Voltage	I_R = 100 μA				5		V
V_R	Reverse Breakdown Voltage Tolerance(2)	I_R = 100 μA	LM4040CEM3	$T_A = T_J = 25°C$			±25	mV
				$T_A = T_J = T_{MIN}$ to T_{MAX}			±75	
			LM4040DEM3	$T_A = T_J = 25°C$			±50	
				$T_A = T_J = T_{MIN}$ to T_{MAX}			±125	
I_{RMIN}	Minimum Operating Current		LM4040CEM3	$T_A = T_J = 25°C$		54	74	μA
				$T_A = T_J = T_{MIN}$ to T_{MAX}			83	
			LM4040DEM3	$T_A = T_J = 25°C$		54	79	
				$T_A = T_J = T_{MIN}$ to T_{MAX}			88	
$\Delta V_R/\Delta T$	Average Reverse Breakdown Voltage Temperature Coefficient(2)	I_R = 10 mA				±30		ppm/°C
		I_R = 1 mA	LM4040CEM3	$T_A = T_J = 25°C$		±20		
				$T_A = T_J = T_{MIN}$ to T_{MAX}			±100	
			LM4040DEM3	$T_A = T_J = 25°C$		±20		
				$T_A = T_J = T_{MIN}$ to T_{MAX}			±150	
		I_R = 100 μA				±20		
$\Delta V_R/\Delta I_R$	Reverse Breakdown Voltage Change with Operating Current Change(3)	$I_{RMIN} \le I_R \le$ 1 mA	LM4040CEM3	$T_A = T_J = 25°C$		0.5	1	mV
				$T_A = T_J = T_{MIN}$ to T_{MAX}			1.4	
			LM4040DEM3	$T_A = T_J = 25°C$		0.5	1	
				$T_A = T_J = T_{MIN}$ to T_{MAX}			1.8	
		1 mA ≤ $I_R \le$ 15 mA	LM4040CEM3	$T_A = T_J = 25°C$		3.5	8	
				$T_A = T_J = T_{MIN}$ to T_{MAX}			12	
			LM4040DEM3	$T_A = T_J = 25°C$		3.5	8	
				$T_A = T_J = T_{MIN}$ to T_{MAX}			15	
Z_R	Reverse Dynamic Impedance	I_R = 1 mA, f = 120 Hz, I_{AC} = 0.1 I_R				0.5	1.1	Ω
e_N	Wideband Noise	I_R = 100 μA 10 Hz ≤ f ≤ 10 kHz				80		μV_{rms}
ΔV_R	Reverse Breakdown Voltage Long Term Stability	t = 1000 hrs T = 25°C ±0.1°C I_R = 100 μA				120		ppm
V_{HYST}	Thermal Hysteresis(4)	ΔT = −40°C to 125°C				0.08%		

(1) Limits are 100% production tested at 25°C. Limits over temperature are ensured through correlation using Statistical Quality Control (SQC) methods. The limits are used to calculate AOQL.

(2) The (overtemperature) limit for Reverse Breakdown Voltage Tolerance is defined as the room temperature Reverse Breakdown Voltage Tolerance ±[($\Delta V_R/\Delta T$)(maxΔT)(V_R)]. Where, $\Delta V_R/\Delta T$ is the V_R temperature coefficient, maxΔT is the maximum difference in temperature from the reference point of 25°C to T_{MIN} or T_{MAX}, and V_R is the reverse breakdown voltage. The total overtemperature tolerance for the different grades in the industrial temperature range where maxΔT = 65°C is shown below:
A-grade: ±0.75% = ±0.1% ±100 ppm/°C × 65°C
B-grade: ±0.85% = ±0.2% ±100 ppm/°C × 65°C
C-grade: ±1.15% = ±0.5% ±100 ppm/°C × 65°C
D-grade: ±1.98% = ±1.0% ±150 ppm/°C × 65°C
E-grade: ±2.98% = ±2.0% ±150 ppm/°C × 65°C
The total overtemperature tolerance for the different grades in the extended temperature range where max ΔT = 100 °C is shown below:
C-grade: ±1.5% = ±0.5% ±100 ppm/°C × 100°C
D-grade: ±2.5% = ±1.0% ±150 ppm/°C × 100°C
E-grade: ±3.5% = ±2.0% ±150 ppm/°C × 100°C
Therefore, as an example, the A-grade 2.5-V LM4040-N has an overtemperature Reverse Breakdown Voltage tolerance of ±2.5V × 0.75% = ±19 mV.

(3) Load regulation is measured on pulse basis from no load to the specified load current. Output changes due to die temperature change must be taken into account separately.

(4) Thermal hysteresis is defined as the difference in voltage measured at +25°C after cycling to temperature -40°C and the 25°C measurement after cycling to temperature 125°C.

Copyright © 2000–2018, Texas Instruments Incorporated

6.19 Electrical Characteristics: 8.2-V LM4040-N V_R Tolerance Grades 'A' And 'B'; Temperature Grade 'I'

all other limits $T_A = T_J = 25°C$. The grades A and B designate initial Reverse Breakdown Voltage tolerances of ±0.1% and ±0.2%, respectively.

PARAMETER		TEST CONDITIONS			MIN(1)	TYP(2)	MAX(1)	UNIT
V_R	Reverse Breakdown Voltage	I_R = 150 µA				8.192		V
V_R	Reverse Breakdown Voltage Tolerance(3)	I_R = 150 µA	LM4040AIM3 LM4040AIZ	$T_A = T_J = 25°C$			±8.2	mV
				$T_A = T_J = T_{MIN}$ to T_{MAX}			±61	
			LM4040BIM3 LM4040BIZ	$T_A = T_J = 25°C$			±16	
				$T_A = T_J = T_{MIN}$ to T_{MAX}			±70	
I_{RMIN}	Minimum Operating Current		$T_A = T_J = 25°C$			67	91	µA
			$T_A = T_J = T_{MIN}$ to T_{MAX}				95	
$\Delta V_R/\Delta T$	Average Reverse Breakdown Voltage Temperature Coefficient(3)	I_R = 10 mA				±40		ppm/°C
		I_R = 1 mA	$T_A = T_J = 25°C$			±20		
			$T_A = T_J = T_{MIN}$ to T_{MAX}				±100	
		I_R = 150 µA				±20		
$\Delta V_R/\Delta I_R$	Reverse Breakdown Voltage Change with Operating Current Change(4)	$I_{RMIN} \le I_R \le 1$ mA	$T_A = T_J = 25°C$			0.6	1.3	mV
			$T_A = T_J = T_{MIN}$ to T_{MAX}				2.5	
		1 mA ≤ I_R ≤ 15 mA	$T_A = T_J = 25°C$			7	10	
			$T_A = T_J = T_{MIN}$ to T_{MAX}				18	
Z_R	Reverse Dynamic Impedance	I_R = 1 mA, f = 120 Hz, I_{AC} = 0.1 I_R				0.6	1.5	Ω
e_N	Wideband Noise	I_R = 150 µA 10 Hz ≤ f ≤ 10 kHz				130		μV_{rms}
ΔV_R	Reverse Breakdown Voltage Long Term Stability	t = 1000 hrs T = 25°C ±0.1°C I_R = 150 µA				120		ppm
V_{HYST}	Thermal Hysteresis(5)	ΔT = −40°C to 125°C				0.08%		

(1) Limits are 100% production tested at 25°C. Limits over temperature are ensured through correlation using Statistical Quality Control (SQC) methods. The limits are used to calculate AOQL.
(2) Typicals are at T_J = 25°C and represent most likely parametric norm.
(3) The (overtemperature) limit for Reverse Breakdown Voltage Tolerance is defined as the room temperature Reverse Breakdown Voltage Tolerance ±[($\Delta V_R/\Delta T$)(maxΔT)(V_R)]. Where, $\Delta V_R/\Delta T$ is the V_R temperature coefficient, maxΔT is the maximum difference in temperature from the reference point of 25°C to T_{MIN} or T_{MAX}, and V_R is the reverse breakdown voltage. The total overtemperature tolerance for the different grades in the industrial temperature range where maxΔT = 65°C is shown below:
A-grade: ±0.75% = ±0.1% ±100 ppm/°C × 65°C
B-grade: ±0.85% = ±0.2% ±100 ppm/°C × 65°C
C-grade: ±1.15% = ±0.5% ±100 ppm/°C × 65°C
D-grade: ±1.98% = ±1.0% ±150 ppm/°C × 65°C
E-grade: ±2.98% = ±2.0% ±150 ppm/°C × 65°C
The total overtemperature tolerance for the different grades in the extended temperature range where max ΔT = 100 °C is shown below:
C-grade: ±1.5% = ±0.5% ±100 ppm/°C × 100°C
D-grade: ±2.5% = ±1.0% ±150 ppm/°C × 100°C
E-grade: ±3.5% = ±2.0% ±150 ppm/°C × 100°C
Therefore, as an example, the A-grade 2.5-V LM4040-N has an overtemperature Reverse Breakdown Voltage tolerance of ±2.5V × 0.75% = ±19 mV.
(4) Load regulation is measured on pulse basis from no load to the specified load current. Output changes due to die temperature change must be taken into account separately.
(5) Thermal hysteresis is defined as the difference in voltage measured at +25°C after cycling to temperature -40°C and the 25°C measurement after cycling to temperature 125°C.

Copyright © 2000–2018, Texas Instruments Incorporated

6.20 Electrical Characteristics: 8.2-V Lm4040-N V_R Tolerance Grades 'C' And 'D'; Temperature Grade 'I'

all other limits $T_A = T_J = 25°C$. The grades C and D designate initial Reverse Breakdown Voltage tolerances of ±0.5% and ±1%, respectively.

PARAMETER		TEST CONDITIONS			MIN(1)	TYP(2)	MAX(1)	UNIT
V_R	Reverse Breakdown Voltage	I_R = 150 µA				8.192		V
V_R	Reverse Breakdown Voltage Tolerance(3)	I_R = 150 µA	LM4040CIM3 LM4040CIZ	$T_A = T_J = 25°C$			±41	mV
				$T_A = T_J = T_{MIN}$ to T_{MAX}			±94	
			LM4040DIM3 LM4040DIZ	$T_A = T_J = 25°C$			±82	
				$T_A = T_J = T_{MIN}$ to T_{MAX}			±162	
I_{RMIN}	Minimum Operating Current		LM4040CIM3 LM4040CIZ	$T_A = T_J = 25°C$		67	91	µA
				$T_A = T_J = T_{MIN}$ to T_{MAX}			95	
			LM4040DIM3 LM4040DIZ	$T_A = T_J = 25°C$		67	96	
				$T_A = T_J = T_{MIN}$ to T_{MAX}			100	
$\Delta V_R/\Delta T$	Average Reverse Breakdown Voltage Temperature Coefficient(3)	I_R = 10 mA				±40		ppm/°C
		I_R = 1 mA	LM4040CIM3 LM4040CIZ	$T_A = T_J = 25°C$		±20		
				$T_A = T_J = T_{MIN}$ to T_{MAX}			±100	
			LM4040DIM3 LM4040DIZ	$T_A = T_J = 25°C$		±20		
				$T_A = T_J = T_{MIN}$ to T_{MAX}			±150	
		I_R = 150 µA				±20		
$\Delta V_R/\Delta I_R$	Reverse Breakdown Voltage Change with Operating Current Change(4)	$I_{RMIN} \le I_R \le$ 1 mA	LM4040CIM3 LM4040CIZ	$T_A = T_J = 25°C$		0.6	1.3	mV
				$T_A = T_J = T_{MIN}$ to T_{MAX}			2.5	
			LM4040DIM3 LM4040DIZ	$T_A = T_J = 25°C$		0.6	1.7	
				$T_A = T_J = T_{MIN}$ to T_{MAX}			3	
		1 mA ≤ $I_R \le$ 15 mA	LM4040CIM3 LM4040CIZ	$T_A = T_J = 25°C$		7	10	
				$T_A = T_J = T_{MIN}$ to T_{MAX}			18	
			LM4040DIM3 LM4040DIZ	$T_A = T_J = 25°C$		7	15	
				$T_A = T_J = T_{MIN}$ to T_{MAX}			24	
Z_R	Reverse Dynamic Impedance	I_R = 1 mA, f = 120 Hz, $I_{AC} = 0.1\ I_R$	LM4040CIM3 LM4040CIZ			0.6	1.5	Ω
			LM4040DIM3 LM4040DIZ			0.6	1.9	
e_N	Wideband Noise	I_R = 150 µA 10 Hz ≤ f ≤ 10 kHz				130		μV_{rms}
ΔV_R	Reverse Breakdown Voltage Long Term Stability	t = 1000 hrs T = 25°C ±0.1°C I_R = 150 µA				120		ppm
V_{HYST}	Thermal Hysteresis(5)	ΔT = −40°C to 125°C				0.08%		

(1) Limits are 100% production tested at 25°C. Limits over temperature are ensured through correlation using Statistical Quality Control (SQC) methods. The limits are used to calculate AOQL.
(2) Typicals are at T_J = 25°C and represent most likely parametric norm.
(3) The (overtemperature) limit for Reverse Breakdown Voltage Tolerance is defined as the room temperature Reverse Breakdown Voltage Tolerance ±[($\Delta V_R/\Delta T$)(maxΔT)(V_R)]. Where, $\Delta V_R/\Delta T$ is the V_R temperature coefficient, maxΔT is the maximum difference in temperature from the reference point of 25°C to T_{MIN} or T_{MAX}, and V_R is the reverse breakdown voltage. The total overtemperature tolerance for the different grades in the industrial temperature range where maxΔT = 65°C is shown below:
A-grade: ±0.75% = ±0.1% ±100 ppm/°C × 65°C
B-grade: ±0.85% = ±0.2% ±100 ppm/°C × 65°C
C-grade: ±1.15% = ±0.5% ±100 ppm/°C × 65°C
D-grade: ±1.98% = ±1.0% ±150 ppm/°C × 65°C
E-grade: ±2.98% = ±2.0% ±150 ppm/°C × 65°C
The total overtemperature tolerance for the different grades in the extended temperature range where max ΔT = 100 °C is shown below:
C-grade: ±1.5% = ±0.5% ±100 ppm/°C × 100°C
D-grade: ±2.5% = ±1.0% ±150 ppm/°C × 100°C
E-grade: ±3.5% = ±2.0% ±150 ppm/°C × 100°C
Therefore, as an example, the A-grade 2.5-V LM4040-N has an overtemperature Reverse Breakdown Voltage tolerance of ±2.5V × 0.75% = ±19 mV.
(4) Load regulation is measured on pulse basis from no load to the specified load current. Output changes due to die temperature change must be taken into account separately.
(5) Thermal hysteresis is defined as the difference in voltage measured at +25°C after cycling to temperature -40°C and the 25°C measurement after cycling to temperature 125°C.

Copyright © 2000–2018, Texas Instruments Incorporated

6.21 Electrical Characteristics: 10-V LM4040-N V_R Tolerance Grades 'A' And 'B'; Temperature Grade 'I'

all other limits $T_A = T_J = 25°C$. The grades A and B designate initial Reverse Breakdown Voltage tolerances of ±0.1% and ±0.2%, respectively.

PARAMETER		TEST CONDITIONS			MIN(1)	TYP(2)	MAX(1)	UNIT
V_R	Reverse Breakdown Voltage	I_R = 150 µA				10		V
V_R	Reverse Breakdown Voltage Tolerance(3)	I_R = 150 µA	LM4040AIM3 LM4040AIZ	$T_A = T_J = 25°C$			±10	mV
				$T_A = T_J = T_{MIN}$ to T_{MAX}			±75	
			LM4040BIM3 LM4040BIZ	$T_A = T_J = 25°C$			±20	
				$T_A = T_J = T_{MIN}$ to T_{MAX}			±85	
I_{RMIN}	Minimum Operating Current		$T_A = T_J = 25°C$			75	100	µA
			$T_A = T_J = T_{MIN}$ to T_{MAX}				103	
$\Delta V_R/\Delta T$	Average Reverse Breakdown Voltage Temperature Coefficient(3)	I_R = 10 mA				±40		ppm/°C
		I_R = 1 mA	$T_A = T_J = 25°C$			±20		
			$T_A = T_J = T_{MIN}$ to T_{MAX}				±100	
		I_R = 150 µA				±20		
$\Delta V_R/\Delta I_R$	Reverse Breakdown Voltage Change with Operating Current Change(4)	$I_{RMIN} \le I_R \le 1$ mA	$T_A = T_J = 25°C$			0.8	1.5	mV
			$T_A = T_J = T_{MIN}$ to T_{MAX}				3.5	
		1 mA ≤ I_R ≤ 15 mA	$T_A = T_J = 25°C$			8	12	
			$T_A = T_J = T_{MIN}$ to T_{MAX}				23	
Z_R	Reverse Dynamic Impedance	I_R = 1 mA, f = 120 Hz, I_{AC} = 0.1 I_R				0.7	1.7	Ω
e_N	Wideband Noise	I_R = 150 µA 10 Hz ≤ f ≤ 10 kHz				180		μV_{rms}
ΔV_R	Reverse Breakdown Voltage Long Term Stability	t = 1000 hrs T = 25°C ±0.1°C I_R = 150 µA				120		ppm
V_{HYST}	Thermal Hysteresis(5)	ΔT = −40°C to 125°C				0.08%		

(1) Limits are 100% production tested at 25°C. Limits over temperature are ensured through correlation using Statistical Quality Control (SQC) methods. The limits are used to calculate AOQL.
(2) Typicals are at T_J = 25°C and represent most likely parametric norm.
(3) The (overtemperature) limit for Reverse Breakdown Voltage Tolerance is defined as the room temperature Reverse Breakdown Voltage Tolerance ±[($\Delta V_R/\Delta T$)(maxΔT)(V_R)]. Where, $\Delta V_R/\Delta T$ is the V_R temperature coefficient, maxΔT is the maximum difference in temperature from the reference point of 25°C to T_{MIN} or T_{MAX}, and V_R is the reverse breakdown voltage. The total overtemperature tolerance for the different grades in the industrial temperature range where maxΔT = 65°C is shown below:
A-grade: ±0.75% = ±0.1% ±100 ppm/°C × 65°C
B-grade: ±0.85% = ±0.2% ±100 ppm/°C × 65°C
C-grade: ±1.15% = ±0.5% ±100 ppm/°C × 65°C
D-grade: ±1.98% = ±1.0% ±150 ppm/°C × 65°C
E-grade: ±2.98% = ±2.0% ±150 ppm/°C × 65°C
The total overtemperature tolerance for the different grades in the extended temperature range where max ΔT = 100 °C is shown below:
C-grade: ±1.5% = ±0.5% ±100 ppm/°C × 100°C
D-grade: ±2.5% = ±1.0% ±150 ppm/°C × 100°C
E-grade: ±3.5% = ±2.0% ±150 ppm/°C × 100°C
Therefore, as an example, the A-grade 2.5-V LM4040-N has an overtemperature Reverse Breakdown Voltage tolerance of ±2.5V × 0.75% = ±19 mV.
(4) Load regulation is measured on pulse basis from no load to the specified load current. Output changes due to die temperature change must be taken into account separately.
(5) Thermal hysteresis is defined as the difference in voltage measured at +25°C after cycling to temperature -40°C and the 25°C measurement after cycling to temperature 125°C.

Copyright © 2000–2018, Texas Instruments Incorporated

6.22 Electrical Characteristics: 10-V LM4040-N V_R Tolerance Grades 'C' And 'D'; Temperature Grade 'I'

all other limits $T_A = T_J = 25°C$. The grades C and D designate initial Reverse Breakdown Voltage tolerances of ±0.5% and ±1%, respectively.

PARAMETER		TEST CONDITIONS			MIN(1)	TYP(2)	MAX(1)	UNIT
V_R	Reverse Breakdown Voltage	I_R = 150 µA				10		V
V_R	Reverse Breakdown Voltage Tolerance(3)	I_R = 150 µA	LM4040CIM3 LM4040CIZ	$T_A = T_J = 25°C$			±50	mV
				$T_A = T_J = T_{MIN}$ to T_{MAX}			±115	
			LM4040DIM3 LM4040DIZ	$T_A = T_J = 25°C$			±100	
				$T_A = T_J = T_{MIN}$ to T_{MAX}			±198	
I_{RMIN}	Minimum Operating Current		LM4040CIM3 LM4040CIZ	$T_A = T_J = 25°C$		75	100	µA
				$T_A = T_J = T_{MIN}$ to T_{MAX}			103	
			LM4040DIM3 LM4040DIZ	$T_A = T_J = 25°C$		75	110	
				$T_A = T_J = T_{MIN}$ to T_{MAX}			113	
$\Delta V_R/\Delta T$	Average Reverse Breakdown Voltage Temperature Coefficient(3)	I_R = 10 mA				±40		ppm/°C
		I_R = 1 mA	LM4040CIM3 LM4040CIZ	$T_A = T_J = 25°C$		±20		
				$T_A = T_J = T_{MIN}$ to T_{MAX}			±100	
			LM4040DIM3 LM4040DIZ	$T_A = T_J = 25°C$		±20		
				$T_A = T_J = T_{MIN}$ to T_{MAX}			±150	
		I_R = 150 µA				±20		
$\Delta V_R/\Delta I_R$	Reverse Breakdown Voltage Change with Operating Current Change(4)	$I_{RMIN} \le I_R \le 1$ mA	LM4040CIM3 LM4040CIZ	$T_A = T_J = 25°C$		0.8	1.5	mV
				$T_A = T_J = T_{MIN}$ to T_{MAX}			3.5	
			LM4040DIM3 LM4040DIZ	$T_A = T_J = 25°C$		0.8	2	
				$T_A = T_J = T_{MIN}$ to T_{MAX}			4	
		1 mA ≤ I_R ≤ 15 mA	LM4040CIM3 LM4040CIZ	$T_A = T_J = 25°C$		8	12	
				$T_A = T_J = T_{MIN}$ to T_{MAX}			23	
			LM4040DIM3 LM4040DIZ	$T_A = T_J = 25°C$		8	18	
				$T_A = T_J = T_{MIN}$ to T_{MAX}			29	
Z_R	Reverse Dynamic Impedance	I_R = 1 mA, f = 120 Hz, I_{AC} = 0.1 I_R	LM4040CIM3 LM4040CIZ			0.7	1.7	Ω
			LM4040DIM3 LM4040DIZ				2.3	
e_N	Wideband Noise	I_R = 150 µA 10 Hz ≤ f ≤ 10 kHz				180		μV_{rms}
ΔV_R	Reverse Breakdown Voltage Long Term Stability	t = 1000 hrs T = 25°C ±0.1°C I_R = 150 µA				120		ppm
V_{HYST}	Thermal Hysteresis(5)	ΔT = −40°C to 125°C				0.08%		

(1) Limits are 100% production tested at 25°C. Limits over temperature are ensured through correlation using Statistical Quality Control (SQC) methods. The limits are used to calculate AOQL.
(2) Typicals are at T_J = 25°C and represent most likely parametric norm.
(3) The (overtemperature) limit for Reverse Breakdown Voltage Tolerance is defined as the room temperature Reverse Breakdown Voltage Tolerance ±[($\Delta V_R/\Delta T$)(maxΔT)(V_R)]. Where, $\Delta V_R/\Delta T$ is the V_R temperature coefficient, maxΔT is the maximum difference in temperature from the reference point of 25°C to T_{MIN} or T_{MAX}, and V_R is the reverse breakdown voltage. The total overtemperature tolerance for the different grades in the industrial temperature range where maxΔT = 65°C is shown below:
A-grade: ±0.75% = ±0.1% ±100 ppm/°C × 65°C
B-grade: ±0.85% = ±0.2% ±100 ppm/°C × 65°C
C-grade: ±1.15% = ±0.5% ±100 ppm/°C × 65°C
D-grade: ±1.98% = ±1.0% ±150 ppm/°C × 65°C
E-grade: ±2.98% = ±2.0% ±150 ppm/°C × 65°C
The total overtemperature tolerance for the different grades in the extended temperature range where max ΔT = 100 °C is shown below:
C-grade: ±1.5% = ±0.5% ±100 ppm/°C × 100°C
D-grade: ±2.5% = ±1.0% ±150 ppm/°C × 100°C
E-grade: ±3.5% = ±2.0% ±150 ppm/°C × 100°C
Therefore, as an example, the A-grade 2.5-V LM4040-N has an overtemperature Reverse Breakdown Voltage tolerance of ±2.5V × 0.75% = ±19 mV.
(4) Load regulation is measured on pulse basis from no load to the specified load current. Output changes due to die temperature change must be taken into account separately.
(5) Thermal hysteresis is defined as the difference in voltage measured at +25°C after cycling to temperature -40°C and the 25°C measurement after cycling to temperature 125°C.

Copyright © 2000–2018, Texas Instruments Incorporated

6.23 Typical Characteristics

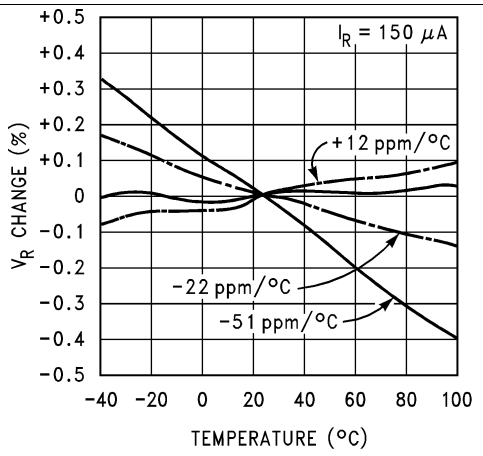

Figure 1. Temperature Drift For Different Average Temperature Coefficient

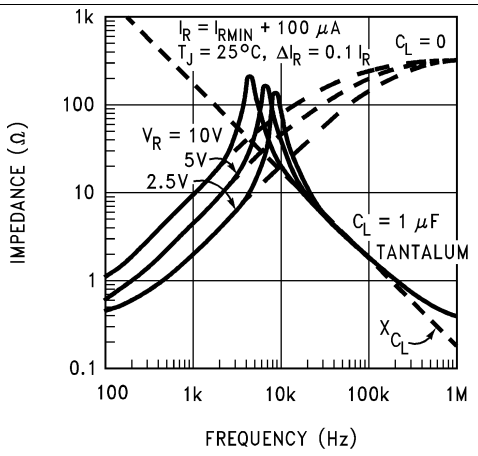

Figure 2. Output Impedance vs Frequency

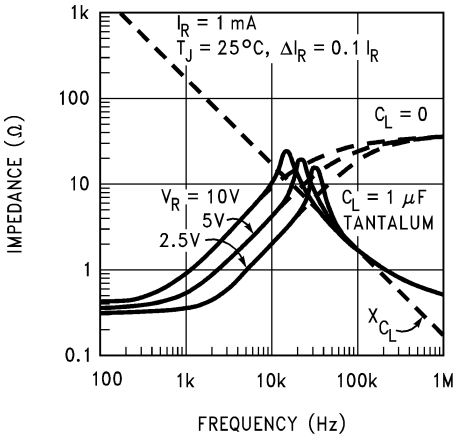

Figure 3. Output Impedance vs Frequency

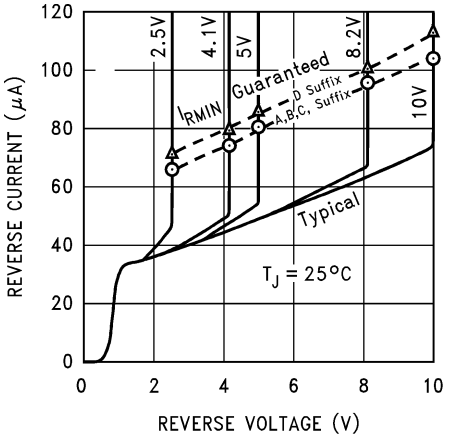

Figure 4. Reverse Characteristics And Minimum Operating Current

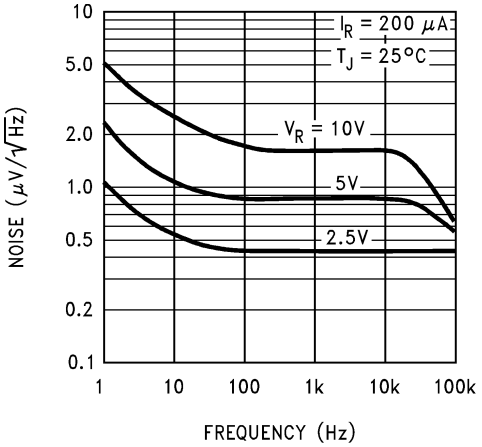

Figure 5. Noise Voltage vs Frequency

Copyright © 2000–2018, Texas Instruments Incorporated

6.23.1 Start-Up Characteristics

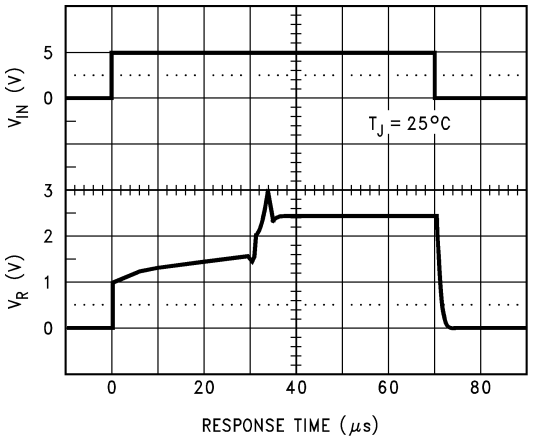

R_S = 30k

Figure 6. Input Voltage Step Response LM4040-N-2.5

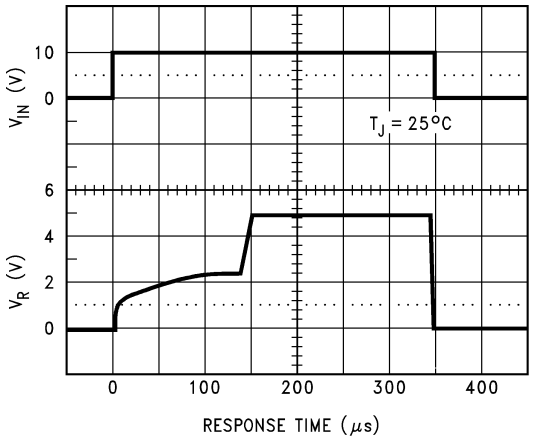

R_S = 30k

Figure 7. Input Voltage Step Response LM4040-N-5

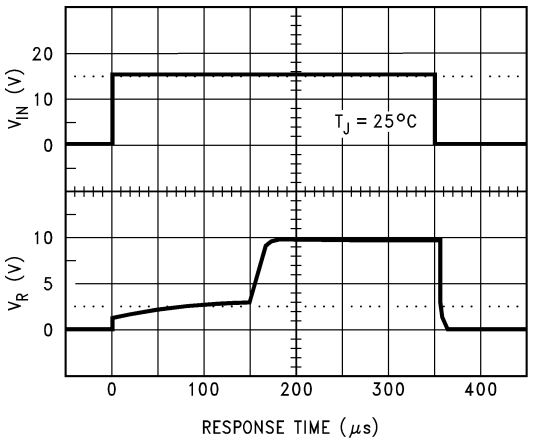

R_S = 30k

Figure 8. Input Voltage Step Response LM4040-N-10

7 Parameter Measurement Information

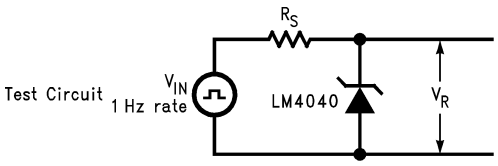

Figure 9. Test Circuit

Copyright © 2000–2018, Texas Instruments Incorporated

8 Detailed Description

8.1 Overview

The LM4040 device is a precision micropower shunt voltage reference available in 7 different fixed-output voltage options and three different packages to meet small footprint requirements. The part is also available in five different tolerance grades.

8.2 Functional Block Diagram

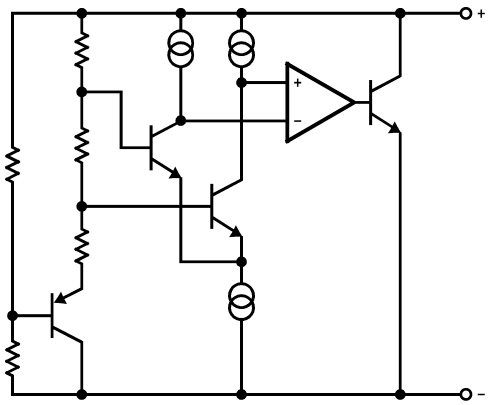

8.3 Feature Description

The LM4040 device is effectively a precision Zener diode. The part requires a small quiescent current for regulation, and regulates the output voltage by shunting more or less current to ground, depending on input voltage and load. The only external component requirement is a resistor between the cathode and the input voltage to set the input current. An external capacitor can be used on the input or output, but is not required.

8.4 Device Functional Modes

The LM4040 device is a fixed output voltage part, where the feedback is internal. Therefore, the part can only operate is a closed loop mode and the output voltage cannot be adjusted. The output voltage will remain in regulation as long as I_R is between I_{RMIN}, see *Electrical Characteristics: 2-V LM4040-N V_R Tolerance Grades 'A' And 'B'; Temperature Grade 'I'*, and I_{RMAX}, 15 mA. Proper selection of the external resistor for input voltage range and load current range will ensure these conditions are met.

Copyright © 2000–2018, Texas Instruments Incorporated

9 Application and Implementation

NOTE

Information in the following applications sections is not part of the TI component specification, and TI does not warrant its accuracy or completeness. TI's customers are responsible for determining suitability of components for their purposes. Customers should validate and test their design implementation to confirm system functionality.

9.1 Application Information

The LM4040-N is a precision micropower curvature-corrected bandgap shunt voltage reference. For space critical applications, the LM4040-N is available in SOT-23 and SC70 surface-mount packages. The LM4040-N has been designed for stable operation without the need of an external capacitor connected between the + pin and the − pin. If, however, a bypass capacitor is used, the LM4040-N remains stable. Reducing design effort is the availability of several fixed reverse breakdown voltages: 2.048 V, 2.5 V, 3 V, 4.096 V, 5 V, 8.192 V, and 10 V. The minimum operating current increases from 60 μA for the LM4040-N-2.048 and LM4040-N-2.5 to 100 μA for the 10-V LM4040-N. All versions have a maximum operating current of 15 mA.

LM4040-Ns in the SOT-23 packages have a parasitic Schottky diode between pin 2 (−) and pin 3 (Die attach interface contact). Therefore, pin 3 of the SOT-23 package must be left floating or connected to pin 2.

LM4040-Ns in the SC70 have a parasitic Schottky diode between pin 1 (−) and pin 2 (Die attach interface contact). Therefore, pin 2 must be left floating or connected to pin1.

The 4.096-V version allows single 5-V 12-bit ADCs or DACs to operate with an LSB equal to 1 mV. For 12-bit ADCs or DACs that operate on supplies of 10 V or greater, the 8.192-V version gives 2 mV per LSB.

The typical thermal hysteresis specification is defined as the change in 25°C voltage measured after thermal cycling. The device is thermal cycled to temperature –40°C and then measured at 25°C. Next the device is thermal cycled to temperature 125°C and again measured at 25°C. The resulting V_{OUT} delta shift between the 25°C measurements is thermal hysteresis. Thermal hysteresis is common in precision references and is induced by thermal-mechanical package stress. Changes in environmental storage temperature, operating temperature and board mounting temperature are all factors that can contribute to thermal hysteresis.

In a conventional shunt regulator application (Figure 10) , an external series resistor (R_S) is connected between the supply voltage and the LM4040-N. R_S determines the current that flows through the load (I_L) and the LM4040-N (I_Q). Since load current and supply voltage may vary, R_S should be small enough to supply at least the minimum acceptable I_Q to the LM4040-N even when the supply voltage is at its minimum and the load current is at its maximum value. When the supply voltage is at its maximum and I_L is at its minimum, R_S should be large enough so that the current flowing through the LM4040-N is less than 15 mA.

R_S is determined by the supply voltage, (V_S), the load and operating current, (I_L and I_Q), and the LM4040-N's reverse breakdown voltage, V_R.

$$R_S = \frac{V_S - V_R}{I_L + I_Q} \tag{1}$$

9.2 Typical Applications

9.2.1 Shunt Regulator

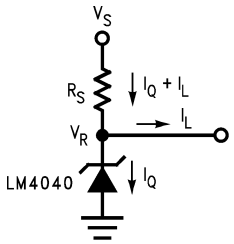

Figure 10. Shunt Regulator Schematic

Copyright © 2000–2018, Texas Instruments Incorporated

Typical Applications (continued)

9.2.1.1 Design Requirements

$V_{IN} > V_{OUT}$

Select R_S such that:

$I_{RMIN} < I_R < I_{RMAX}$ where I_{RMAX} = 15 mA

See *Electrical Characteristics: 2-V LM4040-N V_R Tolerance Grades 'A' And 'B'; Temperature Grade 'I'* for minimum operating current for each voltage option and grade.

9.2.1.2 Detailed Design Procedure

The resistor R_S must be selected such that current IR will remain in the operational region of the part for the entire V_{IN} range and load current range. The two extremes to consider are V_{IN} at its minimum, and the load at its maximum, where R_S must be small enough for I_R to remain above I_{RMIN}. The other extreme is V_{IN} at its maximum, and the load at its minimum, where R_S must be large enough to maintain $I_R < I_{RMAX}$. For most designs, 0.1 mA ≤ I_R ≤ 1 mA is a good starting point.

Use Equation 2 and Equation 3 to set R_S between R_{S_MIN} and R_{S_MAX}.

$$R_{S_MIN} = \frac{V_{IN_MAX} - V_{OUT}}{I_{LOAD_MIN} + I_{R_MAX}} \quad (2)$$

$$R_{S_MAX} = \frac{V_{IN_MIN} - V_{OUT}}{I_{LOAD_MAX} + I_{R_MIN}} \quad (3)$$

9.2.1.3 Application Curve

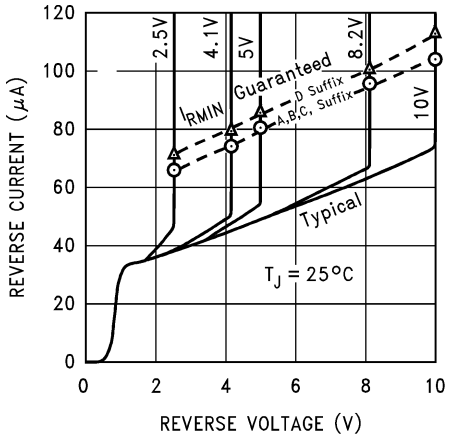

Figure 11. Reverse Characteristics And Minimum Operating Current

Copyright © 2000–2018, Texas Instruments Incorporated

Typical Applications (continued)

9.2.2 4.1-V ADC Application

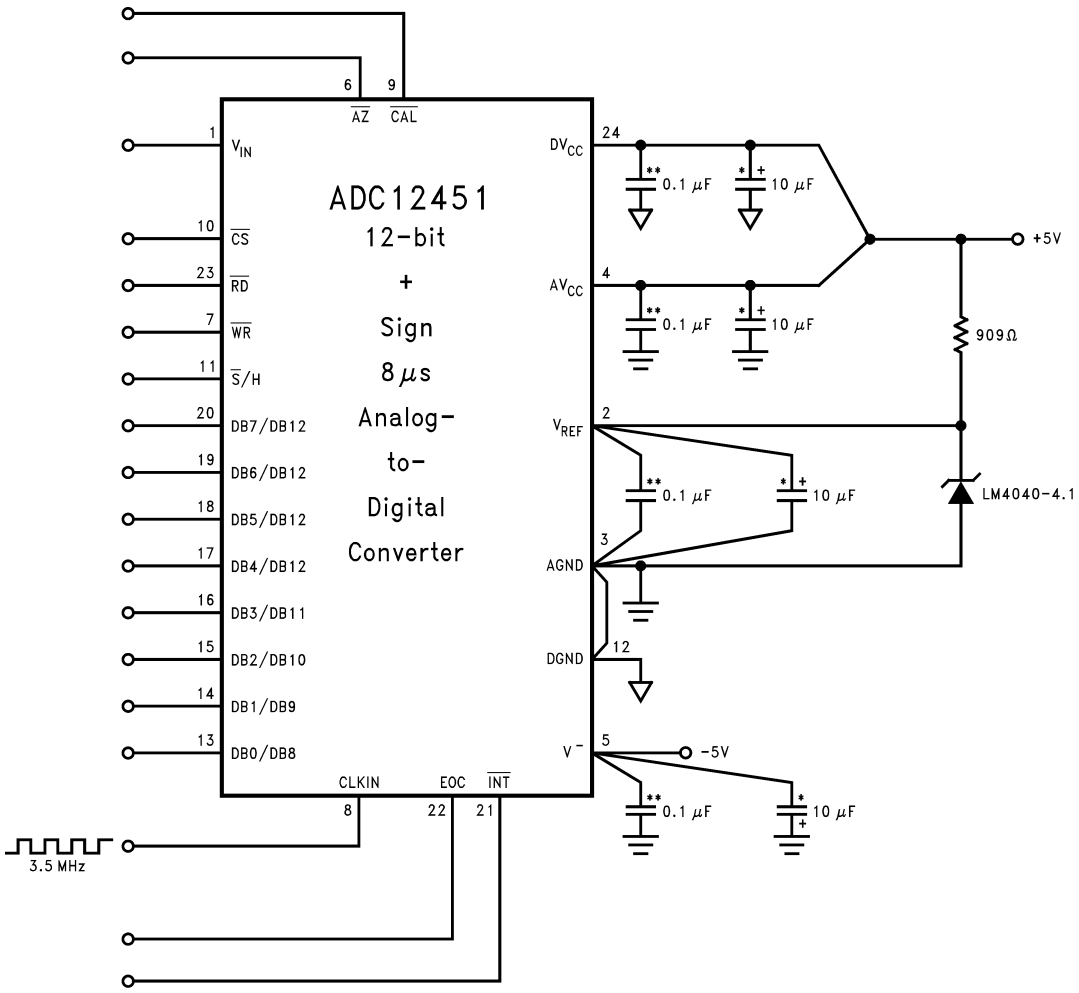

**Ceramic monolithic
*Tantalum

Figure 12. 4.1-V LM4040-N'S Nominal 4.096 Breakdown Voltage Gives ADC12451 1 MV/LSB

9.2.2.1 Design Requirements

The only design requirement is for an output voltage of 4.096 V.

9.2.2.2 Detailed Design Procedure

Using an LM4040-4.1, select an appropriate R_S to sufficiently power the device. Set the target I_R for 1 mA. With an input voltage of 5 V, the resistor can be calculated:

$$R = \frac{5\ V - 4.096\ V}{1\,mA} = 904\ \Omega \quad (4)$$

The closest available resistance of 909 Ω is used here, which in turn yields an I_R of 994 μA.

Copyright © 2000–2018, Texas Instruments Incorporated

Typical Applications (continued)

9.2.3 Bounded Amplifier

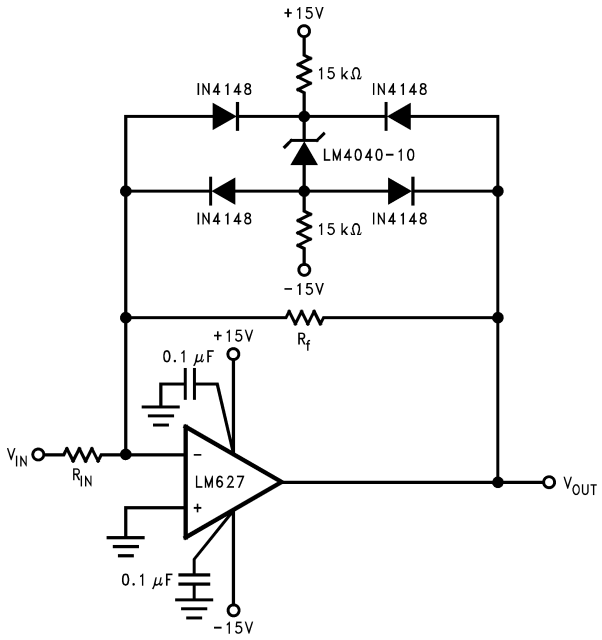

Nominal clamping voltage is ±11.5 V (LM4040-N's reverse breakdown voltage +2 diode V_F).

Figure 13. Bounded Amplifier Reduces Saturation-Induced Delays and Can Prevent Succeeding Stage Damage

9.2.3.1 Design Requirements

Design an amplifier with output clamped at ±11.5 V.

9.2.3.2 Detailed Design Procedure

With amplifier rails of ±15 V, the output can be bound to ±11.5 V with the LM4040-10 and two nominal diode voltage drops of 0.7 V.

$$V_{OUTBound} = 2 \times VFWD + VZ \quad (5)$$

$$V_{OUTBound} = 1.4\ V + 10\ V \quad (6)$$

Select R_S = 15 kΩ to keep I_R low. Calculate I_R to confirm RS selection.

$$I_R = (V_{IN} – V_{OUT}) / R, \text{ however in this case, the negative supply must be taken into account.} \quad (7)$$

$$I_R = (V_{IN+} – V_{IN-} – V_{OUT})/R = (30\ V – 10\ V) / (R_{S1}+R_{S2}) = 20\ V / 30\ k\Omega = 0.667\ mA \quad (8)$$

This is an acceptable value for I_R that will not draw excessive current, but prevents the part from being starved for current.

Copyright © 2000–2018, Texas Instruments Incorporated

Typical Applications (continued)

9.2.4 Protecting Op-Amp Input

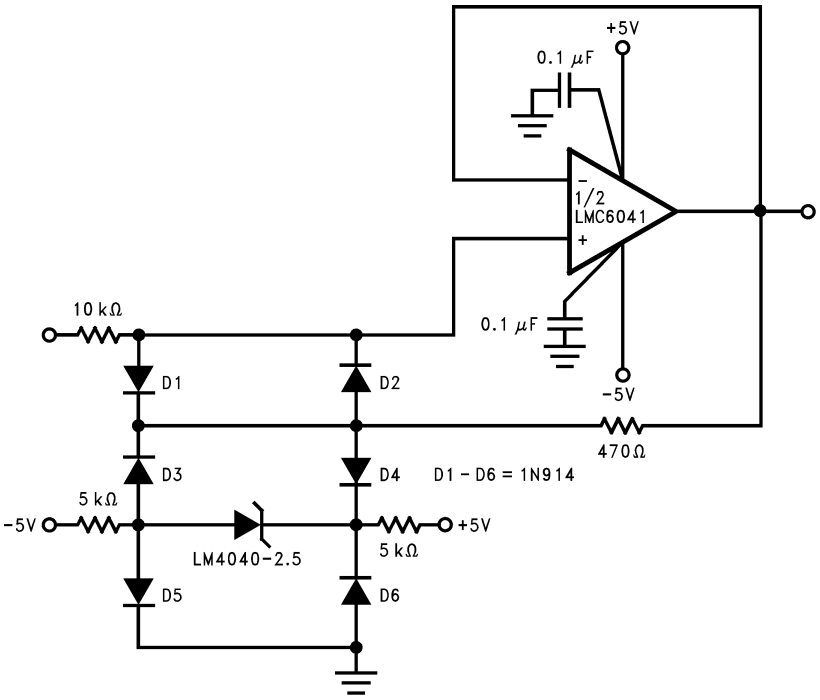

The bounding voltage is ±4 V with the 2.5-V LM4040-N (LM4040-N's reverse breakdown voltage + 3 diode V_F).

Figure 14. Protecting Op Amp Input

9.2.4.1 Design Requirements

Limit the input voltage to the op-amp to ±4 V.

9.2.4.2 Detailed Design Procedure

Similar to *Bounded Amplifier*, this design uses a LM4040-2.5 and three forward diode voltage drops to create a voltage clamp. The procedure for selecting the R_S resistors, in this case 5 kΩ, is the same as *Detailed Design Procedure*.

$$I_R = (V_{IN+} – V_{IN-} – V_{OUT}) / R = (10\ V – 2.5\ V) / (R_{S1} + R_{S2}) = 7.5\ V / 10\ k\Omega = 0.750\ mA \quad (9)$$

Copyright © 2000–2018, Texas Instruments Incorporated

Typical Applications (continued)

9.2.5 Precision ±4.096-V Reference

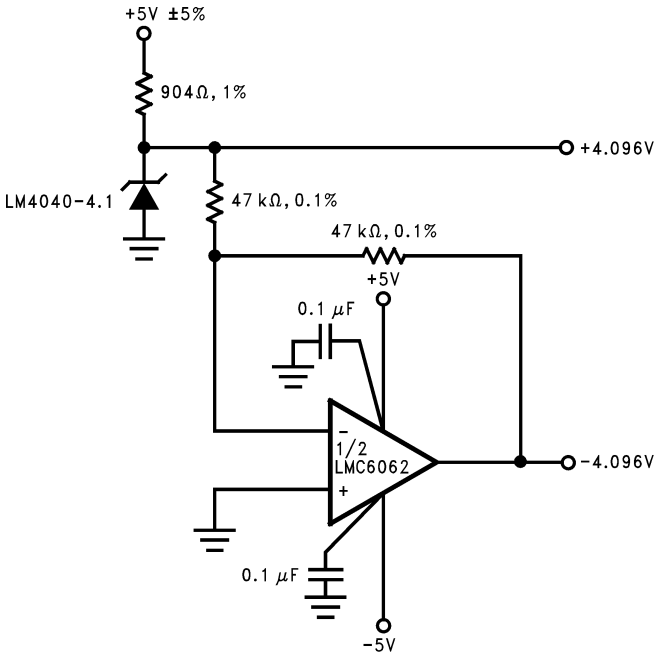

Figure 15. Precision ±4.096-V Reference

9.2.5.1 Design Requirements

Use a single voltage reference to create positive and negative reference rails, ±4.096 V.

9.2.5.2 Detailed Design Procedure

The procedure for selecting the R_S resistor is same as detailed in *Detailed Design Procedure*. The output of the voltage reference is used as the inverting input to the op-amp, with unity gain.

Copyright © 2000–2018, Texas Instruments Incorporated

Typical Applications (continued)

9.2.6 Precision Current Sink/Source

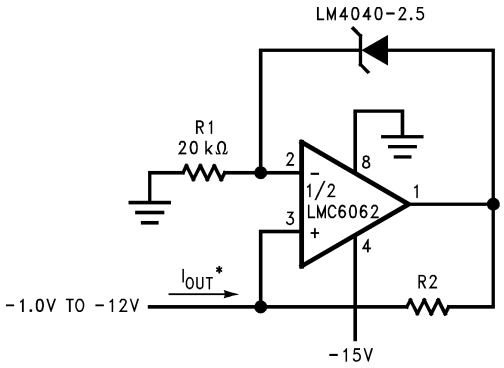

Figure 16. Precision 1-mA Current Sink

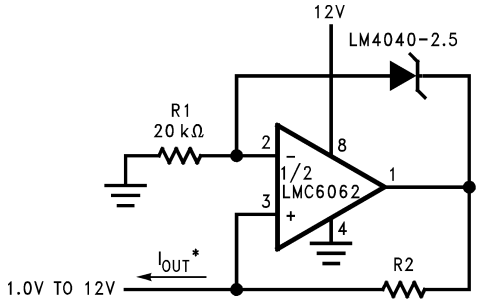

Figure 17. Precision 1-mA Current Source

9.2.6.1 Design Requirements

Create precision 1-mA current sink and/or 1-mA current source.

9.2.6.2 Detailed Design Procedure

Set R1 such that the current through the shunt reference, I_R, is greater than I_{RMIN}.

$I_{OUT} = V_{OUT} / R_2$ where V_{OUT} is the voltage drop across the shunt reference. In this case,

$I_{OUT} = 2.5 / R_2$

Copyright © 2000–2018, Texas Instruments Incorporated

10 Power Supply Recommendations

While a bypass capacitor is not required on the input voltage line, TI recommends reducing noise on the input which could affect the output. A 0.1-µF ceramic capacitor or larger is recommended.

11 Layout

11.1 Layout Guidelines

Place external components as close to the device as possible. Place RS close the cathode, as well as the input bypass capacitor, if used.

11.2 Layout Example

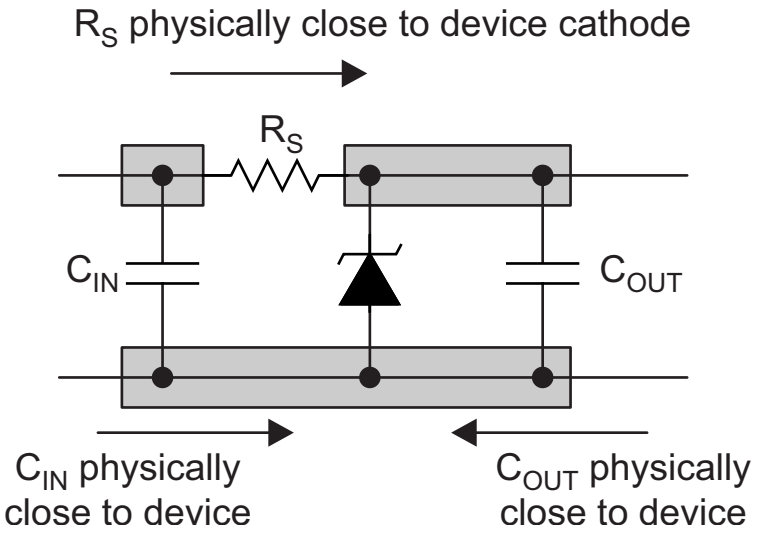

Figure 18. Layout Diagram

12 器件和文档支持

12.1 文档支持

12.1.1 相关文档

请参阅如下相关文档：

- *《焊接的绝对最大额定值》应用报告* (SNOA549)
- *《LM4041-N/LM4041-N-Q1 精密微功耗并联电压基准》* (SNOS641)

12.2 相关链接

下表列出了快速访问链接。类别包括技术文档、支持和社区资源、工具和软件，以及立即订购快速访问。

表 **1.** 相关链接

器件	产品文件夹	立即订购	技术文档	工具与软件	支持和社区
LM4040-N	请单击此处	请单击此处	请单击此处	请单击此处	请单击此处
LM4040-N-Q1	请单击此处	请单击此处	请单击此处	请单击此处	请单击此处

12.3 接收文档更新通知

要接收文档更新通知，请导航至 TI.com.cn 上的器件产品文件夹。单击右上角的*通知我* 进行注册，即可每周接收产品信息更改摘要。有关更改的详细信息，请查看任何已修订文档中包含的修订历史记录。

12.4 社区资源

下列链接提供到 TI 社区资源的连接。链接的内容由各个分销商“按照原样”提供。这些内容并不构成 TI 技术规范，并且不一定反映 TI 的观点；请参阅 TI 的 《使用条款》。

TI E2E™ 在线社区 ***TI 的工程师对工程师 (E2E) 社区。*** **此社区的创建目的在于促进工程师之间的协作。在 e2e.ti.com 中，您可以咨询问题、分享知识、拓展思路并与同行工程师一道帮助解决问题。**

设计支持 ***TI 参考设计支持*** **可帮助您快速查找有帮助的 E2E 论坛、设计支持工具以及技术支持的联系信息。**

12.5 商标

E2E is a trademark of Texas Instruments.
All other trademarks are the property of their respective owners.

12.6 静电放电警告



这些装置包含有限的内置 ESD 保护。 存储或装卸时，应将导线一起截短或将装置放置于导电泡棉中，以防止 MOS 门极遭受静电损伤。

12.7 术语表

SLYZ022 — *TI 术语表*。

这份术语表列出并解释术语、缩写和定义。

13 机械、封装和可订购信息

以下页面包含机械、封装和可订购信息。这些信息是指定器件的最新可用数据。数据如有变更，恕不另行通知，且不会对此文档进行修订。如需获取此数据表的浏览器版本，请查阅左侧的导航栏。

13.1 SOT-23 和 SC70 封装标记信息

SOT-23 和 SC70 的小型表面上只能放置三个标记位。下表介绍了这三个标记位的含义。

第一位：

R = 基准

第二位：电压选项

版权 © 2000–2018, Texas Instruments Incorporated

SOT-23 和 SC70 封装标记信息 (接下页)

J = 2.048V 电压选项
2 = 2.5V 电压选项
K = 3V 电压选项
4 = 4.096V 电压选项
5 = 5V 电压选项
8 = 8.192V 电压选项
0 = 10V 电压选项

第三位：初始反向击穿电压或基准电压容差

A = ±0.1%
B = ±0.2%
C = +0.5%
D = ±1.0%
E = ±2.0%

部件标记	标记位定义
RJA（仅 SOT-23）	基准，2.048V，±0.1%
R2A（仅 SOT-23）	基准，2.5V，±0.1%
RKA（仅 SOT-23）	基准，3V，±0.1%
R4A（仅 SOT-23）	基准，4.096，±0.1%
R5A（仅 SOT-23）	基准，5V，±0.1%
R8A（仅 SOT-23）	基准，8.192V，±0.1%
R0A（仅 SOT-23）	基准，10V，±0.1%
RJB	基准，2.048V，±0.2%
R2B	基准，2.5V，±0.2%
RKB	基准，3V，±0.2%
R4B	基准，4.096V，±0.2%
R5B	基准，5V，±0.2%
R8B（仅 SOT-23）	基准，8.192V，±0.2%
R0B（仅 SOT-23）	基准，10V，±0.2%
RJC	基准，2.048V，±0.5%
R2C	基准，2.5V，±0.5%
RKC	基准，3V，±0.5%
R4C	基准，4.096V，±0.5%
R5C	基准，5V，±0.5%
R8C（仅 SOT-23）	基准，8.192V，±0.5%
R0C（仅 SOT-23）	基准，10V，±0.5%
RJD	基准，2.048V，±1.0%
R2D	基准，2.5V，±1.0%
RKD	基准，3V，±1.0%
R4D	基准，4.096V，±1.0%
R5D	基准，5V，±1.0%
R8D（仅 SOT-23）	基准，8.192V，±1.0%
R0D（仅 SOT-23）	基准，10V，±1.0%
RJE	基准，2.048V，±2.0%
R2E	基准，2.5V，±2.0%
RKE	基准，3V，±2.0%

版权 © 2000–2018, Texas Instruments Incorporated

PACKAGING INFORMATION

Orderable Device	Status (1)	Package Type	Package Drawing	Pins	Package Qty	Eco Plan (2)	Lead finish/ Ball material (6)	MSL Peak Temp (3)	Op Temp (°C)	Device Marking (4/5)	Samples
LM4040AIM3-10.0	NRND	SOT-23	DBZ	3	1000	Non-RoHS & Green	Call TI	Level-1-260C-UNLIM		R0A	
LM4040AIM3-10.0/NOPB	ACTIVE	SOT-23	DBZ	3	1000	RoHS & Green	SN	Level-1-260C-UNLIM	-40 to 85	R0A	Samples
LM4040AIM3-2.0	NRND	SOT-23	DBZ	3	1000	Non-RoHS & Green	Call TI	Level-1-260C-UNLIM		RJA	
LM4040AIM3-2.0/NOPB	ACTIVE	SOT-23	DBZ	3	1000	RoHS & Green	SN	Level-1-260C-UNLIM		RJA	Samples
LM4040AIM3-2.5	ACTIVE	SOT-23	DBZ	3	1000	Non-RoHS & Green	Call TI	Level-1-260C-UNLIM		R2A	Samples
LM4040AIM3-2.5/NOPB	ACTIVE	SOT-23	DBZ	3	1000	RoHS & Green	SN	Level-1-260C-UNLIM		R2A	Samples
LM4040AIM3-3.0/NOPB	ACTIVE	SOT-23	DBZ	3	1000	RoHS & Green	SN	Level-1-260C-UNLIM		RKA	Samples
LM4040AIM3-4.1	NRND	SOT-23	DBZ	3	1000	Non-RoHS & Green	Call TI	Level-1-260C-UNLIM		R4A	
LM4040AIM3-4.1/NOPB	ACTIVE	SOT-23	DBZ	3	1000	RoHS & Green	SN	Level-1-260C-UNLIM		R4A	Samples
LM4040AIM3-5.0	NRND	SOT-23	DBZ	3	1000	Non-RoHS & Green	Call TI	Level-1-260C-UNLIM		R5A	
LM4040AIM3-5.0/NOPB	ACTIVE	SOT-23	DBZ	3	1000	RoHS & Green	SN	Level-1-260C-UNLIM		R5A	Samples
LM4040AIM3X-10/NOPB	ACTIVE	SOT-23	DBZ	3	3000	RoHS & Green	SN	Level-1-260C-UNLIM		R0A	Samples
LM4040AIM3X-2.0/NOPB	ACTIVE	SOT-23	DBZ	3	3000	RoHS & Green	SN	Level-1-260C-UNLIM		RJA	Samples
LM4040AIM3X-2.5	NRND	SOT-23	DBZ	3	3000	Non-RoHS & Green	Call TI	Level-1-260C-UNLIM		R2A	
LM4040AIM3X-2.5/NOPB	ACTIVE	SOT-23	DBZ	3	3000	RoHS & Green	SN	Level-1-260C-UNLIM		R2A	Samples
LM4040AIM3X-3.0/NOPB	ACTIVE	SOT-23	DBZ	3	3000	RoHS & Green	SN	Level-1-260C-UNLIM		RKA	Samples
LM4040AIM3X-4.1/NOPB	ACTIVE	SOT-23	DBZ	3	3000	RoHS & Green	SN	Level-1-260C-UNLIM		R4A	Samples
LM4040AIM3X-5.0	NRND	SOT-23	DBZ	3	3000	Non-RoHS & Green	Call TI	Level-1-260C-UNLIM		R5A	

Orderable Device	Status (1)	Package Type	Package Drawing	Pins	Package Qty	Eco Plan (2)	Lead finish/ Ball material (6)	MSL Peak Temp (3)	Op Temp (°C)	Device Marking (4/5)	Samples
LM4040AIM3X-5.0/NOPB	ACTIVE	SOT-23	DBZ	3	3000	RoHS & Green	SN	Level-1-260C-UNLIM		R5A	Samples
LM4040AIZ-10.0/NOPB	ACTIVE	TO-92	LP	3	1800	RoHS & Green	Call TI	N / A for Pkg Type		4040A IZ10	Samples
LM4040AIZ-2.5/NOPB	ACTIVE	TO-92	LP	3	1800	RoHS & Green	Call TI	N / A for Pkg Type		4040A IZ2.5	Samples
LM4040AIZ-4.1/NOPB	ACTIVE	TO-92	LP	3	1800	RoHS & Green	Call TI	N / A for Pkg Type		4040A IZ4.1	Samples
LM4040AIZ-5.0/NOPB	ACTIVE	TO-92	LP	3	1800	RoHS & Green	Call TI	N / A for Pkg Type		4040A IZ5.0	Samples
LM4040BIM3-10.0	NRND	SOT-23	DBZ	3	1000	Non-RoHS & Green	Call TI	Level-1-260C-UNLIM		R0B	
LM4040BIM3-10.0/NOPB	ACTIVE	SOT-23	DBZ	3	1000	RoHS & Green	SN	Level-1-260C-UNLIM		R0B	Samples
LM4040BIM3-2.0/NOPB	ACTIVE	SOT-23	DBZ	3	1000	RoHS & Green	SN	Level-1-260C-UNLIM		RJB	Samples
LM4040BIM3-2.5	ACTIVE	SOT-23	DBZ	3	1000	Non-RoHS & Green	Call TI	Level-1-260C-UNLIM		R2B	Samples
LM4040BIM3-2.5/NOPB	ACTIVE	SOT-23	DBZ	3	1000	RoHS & Green	SN	Level-1-260C-UNLIM		R2B	Samples
LM4040BIM3-3.0	NRND	SOT-23	DBZ	3	1000	Non-RoHS & Green	Call TI	Level-1-260C-UNLIM		RKB	
LM4040BIM3-3.0/NOPB	ACTIVE	SOT-23	DBZ	3	1000	RoHS & Green	SN	Level-1-260C-UNLIM		RKB	Samples
LM4040BIM3-4.1	NRND	SOT-23	DBZ	3	1000	Non-RoHS & Green	Call TI	Level-1-260C-UNLIM		R4B	
LM4040BIM3-4.1/NOPB	ACTIVE	SOT-23	DBZ	3	1000	RoHS & Green	SN	Level-1-260C-UNLIM		R4B	Samples
LM4040BIM3-5.0	NRND	SOT-23	DBZ	3	1000	Non-RoHS & Green	Call TI	Level-1-260C-UNLIM		R5B	
LM4040BIM3-5.0/NOPB	ACTIVE	SOT-23	DBZ	3	1000	RoHS & Green	SN	Level-1-260C-UNLIM		R5B	Samples
LM4040BIM3-8.2	NRND	SOT-23	DBZ	3	1000	Non-RoHS & Green	Call TI	Level-1-260C-UNLIM		R8B	
LM4040BIM3-8.2/NOPB	ACTIVE	SOT-23	DBZ	3	1000	RoHS & Green	SN	Level-1-260C-UNLIM		R8B	Samples
LM4040BIM3X-10/NOPB	ACTIVE	SOT-23	DBZ	3	3000	RoHS & Green	SN	Level-1-260C-UNLIM		R0B	Samples

Orderable Device	Status (1)	Package Type	Package Drawing	Pins	Package Qty	Eco Plan (2)	Lead finish/ Ball material (6)	MSL Peak Temp (3)	Op Temp (°C)	Device Marking (4/5)	Samples
LM4040BIM3X-2.0/NOPB	ACTIVE	SOT-23	DBZ	3	3000	RoHS & Green	SN	Level-1-260C-UNLIM		RJB	Samples
LM4040BIM3X-2.5	NRND	SOT-23	DBZ	3	3000	Non-RoHS & Green	Call TI	Level-1-260C-UNLIM		R2B	
LM4040BIM3X-2.5/NOPB	ACTIVE	SOT-23	DBZ	3	3000	RoHS & Green	SN	Level-1-260C-UNLIM		R2B	Samples
LM4040BIM3X-3.0/NOPB	ACTIVE	SOT-23	DBZ	3	3000	RoHS & Green	SN	Level-1-260C-UNLIM		RKB	Samples
LM4040BIM3X-4.1	NRND	SOT-23	DBZ	3	3000	Non-RoHS & Green	Call TI	Level-1-260C-UNLIM		R4B	
LM4040BIM3X-4.1/NOPB	ACTIVE	SOT-23	DBZ	3	3000	RoHS & Green	SN	Level-1-260C-UNLIM		R4B	Samples
LM4040BIM3X-5.0/NOPB	ACTIVE	SOT-23	DBZ	3	3000	RoHS & Green	SN	Level-1-260C-UNLIM		R5B	Samples
LM4040BIM7-2.0/NOPB	ACTIVE	SC70	DCK	5	1000	RoHS & Green	SN	Level-1-260C-UNLIM		RJB	Samples
LM4040BIM7-2.5	NRND	SC70	DCK	5	1000	Non-RoHS & Green	Call TI	Level-1-260C-UNLIM		R2B	
LM4040BIM7-2.5/NOPB	ACTIVE	SC70	DCK	5	1000	RoHS & Green	SN	Level-1-260C-UNLIM		R2B	Samples
LM4040BIM7-5.0/NOPB	ACTIVE	SC70	DCK	5	1000	RoHS & Green	SN	Level-1-260C-UNLIM		R5B	Samples
LM4040BIM7X-2.5/NOPB	ACTIVE	SC70	DCK	5	3000	RoHS & Green	SN	Level-1-260C-UNLIM		R2B	Samples
LM4040BIZ-10.0/NOPB	ACTIVE	TO-92	LP	3	1800	RoHS & Green	Call TI	N / A for Pkg Type		4040B IZ10	Samples
LM4040BIZ-2.5/NOPB	ACTIVE	TO-92	LP	3	1800	RoHS & Green	Call TI	N / A for Pkg Type		4040B IZ2.5	Samples
LM4040BIZ-4.1/NOPB	ACTIVE	TO-92	LP	3	1800	RoHS & Green	Call TI	N / A for Pkg Type		4040B IZ4.1	Samples
LM4040BIZ-5.0/NOPB	ACTIVE	TO-92	LP	3	1800	RoHS & Green	Call TI	N / A for Pkg Type		4040B IZ5.0	Samples
LM4040CEM3-2.5	NRND	SOT-23	DBZ	3	1000	Non-RoHS & Green	Call TI	Level-1-260C-UNLIM		R2C	
LM4040CEM3-2.5/NOPB	ACTIVE	SOT-23	DBZ	3	1000	RoHS & Green	SN	Level-1-260C-UNLIM		R2C	Samples
LM4040CEM3-3.0/NOPB	ACTIVE	SOT-23	DBZ	3	1000	RoHS & Green	SN	Level-1-260C-UNLIM		RKC	Samples

Orderable Device	Status (1)	Package Type	Package Drawing	Pins	Package Qty	Eco Plan (2)	Lead finish/ Ball material (6)	MSL Peak Temp (3)	Op Temp (°C)	Device Marking (4/5)	Samples
LM4040CEM3-5.0	NRND	SOT-23	DBZ	3	1000	Non-RoHS & Green	Call TI	Level-1-260C-UNLIM		R5C	
LM4040CEM3-5.0/NOPB	ACTIVE	SOT-23	DBZ	3	1000	RoHS & Green	SN	Level-1-260C-UNLIM		R5C	Samples
LM4040CEM3X-3.0/NOPB	ACTIVE	SOT-23	DBZ	3	3000	RoHS & Green	SN	Level-1-260C-UNLIM		RKC	Samples
LM4040CEM3X-5.0/NOPB	ACTIVE	SOT-23	DBZ	3	3000	RoHS & Green	SN	Level-1-260C-UNLIM		R5C	Samples
LM4040CIM3-10.0	NRND	SOT-23	DBZ	3	1000	Non-RoHS & Green	Call TI	Level-1-260C-UNLIM		R0C	
LM4040CIM3-10.0/NOPB	ACTIVE	SOT-23	DBZ	3	1000	RoHS & Green	SN	Level-1-260C-UNLIM		R0C	Samples
LM4040CIM3-2.0	NRND	SOT-23	DBZ	3	1000	Non-RoHS & Green	Call TI	Level-1-260C-UNLIM		RJC	
LM4040CIM3-2.0/NOPB	ACTIVE	SOT-23	DBZ	3	1000	RoHS & Green	SN	Level-1-260C-UNLIM		RJC	Samples
LM4040CIM3-2.5	NRND	SOT-23	DBZ	3	1000	Non-RoHS & Green	Call TI	Level-1-260C-UNLIM		R2C	
LM4040CIM3-2.5/NOPB	ACTIVE	SOT-23	DBZ	3	1000	RoHS & Green	SN	Level-1-260C-UNLIM		R2C	Samples
LM4040CIM3-3.0	NRND	SOT-23	DBZ	3	1000	Non-RoHS & Green	Call TI	Level-1-260C-UNLIM		RKC	
LM4040CIM3-3.0/NOPB	ACTIVE	SOT-23	DBZ	3	1000	RoHS & Green	SN	Level-1-260C-UNLIM		RKC	Samples
LM4040CIM3-4.1	NRND	SOT-23	DBZ	3	1000	Non-RoHS & Green	Call TI	Level-1-260C-UNLIM		R4C	
LM4040CIM3-4.1/NOPB	ACTIVE	SOT-23	DBZ	3	1000	RoHS & Green	SN	Level-1-260C-UNLIM		R4C	Samples
LM4040CIM3-5.0	NRND	SOT-23	DBZ	3	1000	Non-RoHS & Green	Call TI	Level-1-260C-UNLIM		R5C	
LM4040CIM3-5.0/NOPB	ACTIVE	SOT-23	DBZ	3	1000	RoHS & Green	SN	Level-1-260C-UNLIM		R5C	Samples
LM4040CIM3-8.2	NRND	SOT-23	DBZ	3	1000	Non-RoHS & Green	Call TI	Level-1-260C-UNLIM		R8C	
LM4040CIM3-8.2/NOPB	ACTIVE	SOT-23	DBZ	3	1000	RoHS & Green	SN	Level-1-260C-UNLIM		R8C	Samples
LM4040CIM3X-10/NOPB	ACTIVE	SOT-23	DBZ	3	3000	RoHS & Green	SN	Level-1-260C-UNLIM		R0C	Samples

Orderable Device	Status (1)	Package Type	Package Drawing	Pins	Package Qty	Eco Plan (2)	Lead finish/ Ball material (6)	MSL Peak Temp (3)	Op Temp (°C)	Device Marking (4/5)	Samples
LM4040CIM3X-2.0/NOPB	ACTIVE	SOT-23	DBZ	3	3000	RoHS & Green	SN	Level-1-260C-UNLIM		RJC	Samples
LM4040CIM3X-2.5	NRND	SOT-23	DBZ	3	3000	Non-RoHS & Green	Call TI	Level-1-260C-UNLIM		R2C	
LM4040CIM3X-2.5/NOPB	ACTIVE	SOT-23	DBZ	3	3000	RoHS & Green	SN	Level-1-260C-UNLIM		R2C	Samples
LM4040CIM3X-3.0/NOPB	ACTIVE	SOT-23	DBZ	3	3000	RoHS & Green	SN	Level-1-260C-UNLIM		RKC	Samples
LM4040CIM3X-4.1/NOPB	ACTIVE	SOT-23	DBZ	3	3000	RoHS & Green	SN	Level-1-260C-UNLIM		R4C	Samples
LM4040CIM3X-5.0	NRND	SOT-23	DBZ	3	3000	Non-RoHS & Green	Call TI	Level-1-260C-UNLIM		R5C	
LM4040CIM3X-5.0/NOPB	ACTIVE	SOT-23	DBZ	3	3000	RoHS & Green	SN	Level-1-260C-UNLIM		R5C	Samples
LM4040CIM7-2.0/NOPB	ACTIVE	SC70	DCK	5	1000	RoHS & Green	SN	Level-1-260C-UNLIM		RJC	Samples
LM4040CIM7-2.5/NOPB	ACTIVE	SC70	DCK	5	1000	RoHS & Green	SN	Level-1-260C-UNLIM		R2C	Samples
LM4040CIM7X-2.5/NOPB	ACTIVE	SC70	DCK	5	3000	RoHS & Green	SN	Level-1-260C-UNLIM		R2C	Samples
LM4040CIZ-10.0/NOPB	ACTIVE	TO-92	LP	3	1800	RoHS & Green	Call TI	N / A for Pkg Type		4040C IZ10	Samples
LM4040CIZ-2.5/LFT8	ACTIVE	TO-92	LP	3	2000	RoHS & Green	Call TI	N / A for Pkg Type		4040C IZ2.5	Samples
LM4040CIZ-2.5/NOPB	ACTIVE	TO-92	LP	3	1800	RoHS & Green	Call TI	N / A for Pkg Type		4040C IZ2.5	Samples
LM4040CIZ-4.1/NOPB	ACTIVE	TO-92	LP	3	1800	RoHS & Green	Call TI	N / A for Pkg Type		4040C IZ4.1	Samples
LM4040CIZ-5.0/NOPB	ACTIVE	TO-92	LP	3	1800	RoHS & Green	Call TI	N / A for Pkg Type		4040C IZ5.0	Samples
LM4040DEM3-2.0	NRND	SOT-23	DBZ	3	1000	Non-RoHS & Green	Call TI	Level-1-260C-UNLIM		RJD	
LM4040DEM3-2.0/NOPB	ACTIVE	SOT-23	DBZ	3	1000	RoHS & Green	SN	Level-1-260C-UNLIM		RJD	Samples
LM4040DEM3-2.5/NOPB	ACTIVE	SOT-23	DBZ	3	1000	RoHS & Green	SN	Level-1-260C-UNLIM		R2D	Samples
LM4040DEM3-3.0/NOPB	ACTIVE	SOT-23	DBZ	3	1000	RoHS & Green	SN	Level-1-260C-UNLIM		RKD	Samples

Orderable Device	Status (1)	Package Type	Package Drawing	Pins	Package Qty	Eco Plan (2)	Lead finish/ Ball material (6)	MSL Peak Temp (3)	Op Temp (°C)	Device Marking (4/5)	Samples
LM4040DEM3-5.0	NRND	SOT-23	DBZ	3	1000	Non-RoHS & Green	Call TI	Level-1-260C-UNLIM		R5D	
LM4040DEM3-5.0/NOPB	ACTIVE	SOT-23	DBZ	3	1000	RoHS & Green	SN	Level-1-260C-UNLIM		R5D	Samples
LM4040DEM3X-2.5/NOPB	ACTIVE	SOT-23	DBZ	3	3000	RoHS & Green	SN	Level-1-260C-UNLIM		R2D	Samples
LM4040DEM3X-5.0/NOPB	ACTIVE	SOT-23	DBZ	3	3000	RoHS & Green	SN	Level-1-260C-UNLIM		R5D	Samples
LM4040DIM3-10.0	NRND	SOT-23	DBZ	3	1000	Non-RoHS & Green	Call TI	Level-1-260C-UNLIM		R0D	
LM4040DIM3-10.0/NOPB	ACTIVE	SOT-23	DBZ	3	1000	RoHS & Green	SN	Level-1-260C-UNLIM		R0D	Samples
LM4040DIM3-2.0/NOPB	ACTIVE	SOT-23	DBZ	3	1000	RoHS & Green	SN	Level-1-260C-UNLIM		RJD	Samples
LM4040DIM3-2.5	NRND	SOT-23	DBZ	3	1000	Non-RoHS & Green	Call TI	Level-1-260C-UNLIM		R2D	
LM4040DIM3-2.5/NOPB	ACTIVE	SOT-23	DBZ	3	1000	RoHS & Green	SN	Level-1-260C-UNLIM		R2D	Samples
LM4040DIM3-3.0/NOPB	ACTIVE	SOT-23	DBZ	3	1000	RoHS & Green	SN	Level-1-260C-UNLIM		RKD	Samples
LM4040DIM3-4.1	NRND	SOT-23	DBZ	3	1000	Non-RoHS & Green	Call TI	Level-1-260C-UNLIM		R4D	
LM4040DIM3-4.1/NOPB	ACTIVE	SOT-23	DBZ	3	1000	RoHS & Green	SN	Level-1-260C-UNLIM		R4D	Samples
LM4040DIM3-5.0	NRND	SOT-23	DBZ	3	1000	Non-RoHS & Green	Call TI	Level-1-260C-UNLIM		R5D	
LM4040DIM3-5.0/NOPB	ACTIVE	SOT-23	DBZ	3	1000	RoHS & Green	SN	Level-1-260C-UNLIM		R5D	Samples
LM4040DIM3-8.2/NOPB	ACTIVE	SOT-23	DBZ	3	1000	RoHS & Green	SN	Level-1-260C-UNLIM		R8D	Samples
LM4040DIM3X-10/NOPB	ACTIVE	SOT-23	DBZ	3	3000	RoHS & Green	SN	Level-1-260C-UNLIM		R0D	Samples
LM4040DIM3X-2.0/NOPB	ACTIVE	SOT-23	DBZ	3	3000	RoHS & Green	SN	Level-1-260C-UNLIM		RJD	Samples
LM4040DIM3X-2.5	NRND	SOT-23	DBZ	3	3000	Non-RoHS & Green	Call TI	Level-1-260C-UNLIM		R2D	
LM4040DIM3X-2.5/NOPB	ACTIVE	SOT-23	DBZ	3	3000	RoHS & Green	SN	Level-1-260C-UNLIM		R2D	Samples
LM4040DIM3X-3.0/NOPB	ACTIVE	SOT-23	DBZ	3	3000	RoHS & Green	SN	Level-1-260C-UNLIM		RKD	Samples

Orderable Device	Status (1)	Package Type	Package Drawing	Pins	Package Qty	Eco Plan (2)	Lead finish/ Ball material (6)	MSL Peak Temp (3)	Op Temp (°C)	Device Marking (4/5)	Samples
LM4040DIM3X-4.1/NOPB	ACTIVE	SOT-23	DBZ	3	3000	RoHS & Green	SN	Level-1-260C-UNLIM		R4D	Samples
LM4040DIM3X-5.0	NRND	SOT-23	DBZ	3	3000	Non-RoHS & Green	Call TI	Level-1-260C-UNLIM		R5D	
LM4040DIM3X-5.0/NOPB	ACTIVE	SOT-23	DBZ	3	3000	RoHS & Green	SN	Level-1-260C-UNLIM		R5D	Samples
LM4040DIM7-2.0/NOPB	ACTIVE	SC70	DCK	5	1000	RoHS & Green	SN	Level-1-260C-UNLIM		RJD	Samples
LM4040DIM7-2.5/NOPB	ACTIVE	SC70	DCK	5	1000	RoHS & Green	SN	Level-1-260C-UNLIM		R2D	Samples
LM4040DIM7-5.0	NRND	SC70	DCK	5	1000	Non-RoHS & Green	Call TI	Level-1-260C-UNLIM		R5D	
LM4040DIM7-5.0/NOPB	ACTIVE	SC70	DCK	5	1000	RoHS & Green	SN	Level-1-260C-UNLIM		R5D	Samples
LM4040DIZ-10.0/NOPB	ACTIVE	TO-92	LP	3	1800	RoHS & Green	Call TI	N / A for Pkg Type		4040D IZ10	Samples
LM4040DIZ-2.5/NOPB	ACTIVE	TO-92	LP	3	1800	RoHS & Green	Call TI	N / A for Pkg Type		4040D IZ2.5	Samples
LM4040DIZ-4.1/NOPB	ACTIVE	TO-92	LP	3	1800	RoHS & Green	Call TI	N / A for Pkg Type		4040D IZ4.1	Samples
LM4040DIZ-5.0/LFT1	ACTIVE	TO-92	LP	3	2000	RoHS & Green	SN	N / A for Pkg Type		4040D IZ5.0	Samples
LM4040DIZ-5.0/NOPB	ACTIVE	TO-92	LP	3	1800	RoHS & Green	Call TI	N / A for Pkg Type		4040D IZ5.0	Samples
LM4040EEM3-2.5/NOPB	ACTIVE	SOT-23	DBZ	3	1000	RoHS & Green	SN	Level-1-260C-UNLIM		R2E	Samples
LM4040EIM3-2.5	NRND	SOT-23	DBZ	3	1000	Non-RoHS & Green	Call TI	Level-1-260C-UNLIM		R2E	
LM4040EIM3-2.5/NOPB	ACTIVE	SOT-23	DBZ	3	1000	RoHS & Green	SN	Level-1-260C-UNLIM		R2E	Samples
LM4040EIM3-3.0/NOPB	ACTIVE	SOT-23	DBZ	3	1000	RoHS & Green	SN	Level-1-260C-UNLIM		RKE	Samples
LM4040EIM3X-2.5	NRND	SOT-23	DBZ	3	3000	Non-RoHS & Green	Call TI	Level-1-260C-UNLIM		R2E	
LM4040EIM3X-2.5/NOPB	ACTIVE	SOT-23	DBZ	3	3000	RoHS & Green	SN	Level-1-260C-UNLIM		R2E	Samples
LM4040EIM3X-3.0/NOPB	ACTIVE	SOT-23	DBZ	3	3000	RoHS & Green	SN	Level-1-260C-UNLIM		RKE	Samples

Orderable Device	Status (1)	Package Type	Package Drawing	Pins	Package Qty	Eco Plan (2)	Lead finish/ Ball material (6)	MSL Peak Temp (3)	Op Temp (°C)	Device Marking (4/5)	Samples
LM4040EIM7-2.0/NOPB	ACTIVE	SC70	DCK	5	1000	RoHS & Green	SN	Level-1-260C-UNLIM		RJE	Samples
LM4040QAIM3-2.5/NOPB	ACTIVE	SOT-23	DBZ	3	1000	RoHS & Green	SN	Level-1-260C-UNLIM		R6A	Samples
LM4040QAIM3X2.5/NOPB	ACTIVE	SOT-23	DBZ	3	3000	RoHS & Green	SN	Level-1-260C-UNLIM		R6A	Samples
LM4040QBIM3-2.5/NOPB	ACTIVE	SOT-23	DBZ	3	1000	RoHS & Green	SN	Level-1-260C-UNLIM		R6B	Samples
LM4040QBIM3X2.5/NOPB	ACTIVE	SOT-23	DBZ	3	3000	RoHS & Green	SN	Level-1-260C-UNLIM		R6B	Samples
LM4040QCEM3-2.5/NOPB	ACTIVE	SOT-23	DBZ	3	1000	RoHS & Green	SN	Level-1-260C-UNLIM		R2C	Samples
LM4040QCEM3-3.0/NOPB	ACTIVE	SOT-23	DBZ	3	1000	RoHS & Green	SN	Level-1-260C-UNLIM	-40 to 125	R3C	Samples
LM4040QCIM3-2.5/NOPB	ACTIVE	SOT-23	DBZ	3	1000	RoHS & Green	SN	Level-1-260C-UNLIM		R6C	Samples
LM4040QCIM3X2.5/NOPB	ACTIVE	SOT-23	DBZ	3	3000	RoHS & Green	SN	Level-1-260C-UNLIM		R6C	Samples
LM4040QDEM3-2.5/NOPB	ACTIVE	SOT-23	DBZ	3	1000	RoHS & Green	SN	Level-1-260C-UNLIM		R2D	Samples
LM4040QDEM3-3.0/NOPB	ACTIVE	SOT-23	DBZ	3	1000	RoHS & Green	SN	Level-1-260C-UNLIM	-40 to 125	R3D	Samples
LM4040QDIM3-2.5/NOPB	ACTIVE	SOT-23	DBZ	3	1000	RoHS & Green	SN	Level-1-260C-UNLIM		R6D	Samples
LM4040QDIM3X2.5/NOPB	ACTIVE	SOT-23	DBZ	3	3000	RoHS & Green	SN	Level-1-260C-UNLIM		R6D	Samples
LM4040QEEM3-2.5/NOPB	ACTIVE	SOT-23	DBZ	3	1000	RoHS & Green	SN	Level-1-260C-UNLIM		R2E	Samples
LM4040QEEM3-3.0/NOPB	ACTIVE	SOT-23	DBZ	3	1000	RoHS & Green	SN	Level-1-260C-UNLIM	-40 to 125	R3E	Samples
LM4040QEIM3-2.5/NOPB	ACTIVE	SOT-23	DBZ	3	1000	RoHS & Green	SN	Level-1-260C-UNLIM		R6E	Samples
LM4040QEIM3X2.5/NOPB	ACTIVE	SOT-23	DBZ	3	3000	RoHS & Green	SN	Level-1-260C-UNLIM		R6E	Samples

(1) The marketing status values are defined as follows:
ACTIVE: Product device recommended for new designs.
LIFEBUY: TI has announced that the device will be discontinued, and a lifetime-buy period is in effect.
NRND: Not recommended for new designs. Device is in production to support existing customers, but TI does not recommend using this part in a new design.
PREVIEW: Device has been announced but is not in production. Samples may or may not be available.
OBSOLETE: TI has discontinued the production of the device.

(2) **RoHS:** TI defines "RoHS" to mean semiconductor products that are compliant with the current EU RoHS requirements for all 10 RoHS substances, including the requirement that RoHS substance do not exceed 0.1% by weight in homogeneous materials. Where designed to be soldered at high temperatures, "RoHS" products are suitable for use in specified lead-free processes. TI may reference these types of products as "Pb-Free".
RoHS Exempt: TI defines "RoHS Exempt" to mean products that contain lead but are compliant with EU RoHS pursuant to a specific EU RoHS exemption.
Green: TI defines "Green" to mean the content of Chlorine (Cl) and Bromine (Br) based flame retardants meet JS709B low halogen requirements of <=1000ppm threshold. Antimony trioxide based flame retardants must also meet the <=1000ppm threshold requirement.

(3) MSL, Peak Temp. - The Moisture Sensitivity Level rating according to the JEDEC industry standard classifications, and peak solder temperature.

(4) There may be additional marking, which relates to the logo, the lot trace code information, or the environmental category on the device.

(5) Multiple Device Markings will be inside parentheses. Only one Device Marking contained in parentheses and separated by a "~" will appear on a device. If a line is indented then it is a continuation of the previous line and the two combined represent the entire Device Marking for that device.

(6) Lead finish/Ball material - Orderable Devices may have multiple material finish options. Finish options are separated by a vertical ruled line. Lead finish/Ball material values may wrap to two lines if the finish value exceeds the maximum column width.

Important Information and Disclaimer: The information provided on this page represents TI's knowledge and belief as of the date that it is provided. TI bases its knowledge and belief on information provided by third parties, and makes no representation or warranty as to the accuracy of such information. Efforts are underway to better integrate information from third parties. TI has taken and continues to take reasonable steps to provide representative and accurate information but may not have conducted destructive testing or chemical analysis on incoming materials and chemicals. TI and TI suppliers consider certain information to be proprietary, and thus CAS numbers and other limited information may not be available for release.

In no event shall TI's liability arising out of such information exceed the total purchase price of the TI part(s) at issue in this document sold by TI to Customer on an annual basis.

OTHER QUALIFIED VERSIONS OF LM4040-N, LM4040-N-Q1 :

- Catalog : LM4040-N
- Automotive : LM4040-N-Q1

NOTE: Qualified Version Definitions:

- Catalog - TI's standard catalog product
- Automotive - Q100 devices qualified for high-reliability automotive applications targeting zero defects

TAPE AND REEL INFORMATION

REEL DIMENSIONS

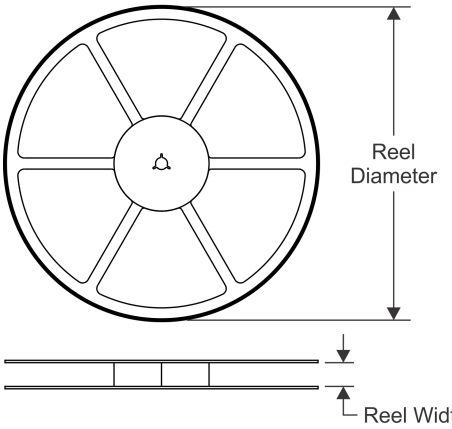

TAPE DIMENSIONS

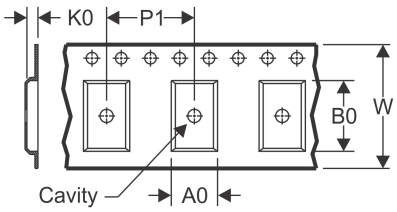

A0	Dimension designed to accommodate the component width
B0	Dimension designed to accommodate the component length
K0	Dimension designed to accommodate the component thickness
W	Overall width of the carrier tape
P1	Pitch between successive cavity centers

QUADRANT ASSIGNMENTS FOR PIN 1 ORIENTATION IN TAPE

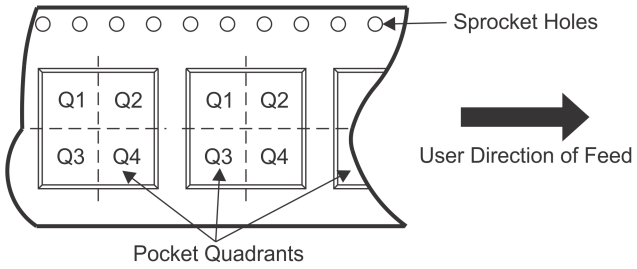

*All dimensions are nominal

Device	Package Type	Package Drawing	Pins	SPQ	Reel Diameter (mm)	Reel Width W1 (mm)	A0 (mm)	B0 (mm)	K0 (mm)	P1 (mm)	W (mm)	Pin1 Quadrant
LM4040AIM3-10.0	SOT-23	DBZ	3	1000	178.0	8.4	3.3	2.9	1.22	4.0	8.0	Q3
LM4040AIM3-10.0/NOPB	SOT-23	DBZ	3	1000	178.0	8.4	3.3	2.9	1.22	4.0	8.0	Q3
LM4040AIM3-2.0	SOT-23	DBZ	3	1000	178.0	8.4	3.3	2.9	1.22	4.0	8.0	Q3
LM4040AIM3-2.0/NOPB	SOT-23	DBZ	3	1000	178.0	8.4	3.3	2.9	1.22	4.0	8.0	Q3
LM4040AIM3-2.5	SOT-23	DBZ	3	1000	178.0	8.4	3.3	2.9	1.22	4.0	8.0	Q3
LM4040AIM3-2.5/NOPB	SOT-23	DBZ	3	1000	178.0	8.4	3.3	2.9	1.22	4.0	8.0	Q3
LM4040AIM3-3.0/NOPB	SOT-23	DBZ	3	1000	178.0	8.4	3.3	2.9	1.22	4.0	8.0	Q3
LM4040AIM3-4.1	SOT-23	DBZ	3	1000	178.0	8.4	3.3	2.9	1.22	4.0	8.0	Q3
LM4040AIM3-4.1/NOPB	SOT-23	DBZ	3	1000	178.0	8.4	3.3	2.9	1.22	4.0	8.0	Q3
LM4040AIM3-5.0	SOT-23	DBZ	3	1000	178.0	8.4	3.3	2.9	1.22	4.0	8.0	Q3
LM4040AIM3-5.0/NOPB	SOT-23	DBZ	3	1000	178.0	8.4	3.3	2.9	1.22	4.0	8.0	Q3
LM4040AIM3X-10/NOPB	SOT-23	DBZ	3	3000	178.0	8.4	3.3	2.9	1.22	4.0	8.0	Q3
LM4040AIM3X-2.0/NOPB	SOT-23	DBZ	3	3000	178.0	8.4	3.3	2.9	1.22	4.0	8.0	Q3
LM4040AIM3X-2.5	SOT-23	DBZ	3	3000	178.0	8.4	3.3	2.9	1.22	4.0	8.0	Q3
LM4040AIM3X-2.5/NOPB	SOT-23	DBZ	3	3000	178.0	8.4	3.3	2.9	1.22	4.0	8.0	Q3
LM4040AIM3X-3.0/NOPB	SOT-23	DBZ	3	3000	178.0	8.4	3.3	2.9	1.22	4.0	8.0	Q3
LM4040AIM3X-4.1/NOPB	SOT-23	DBZ	3	3000	178.0	8.4	3.3	2.9	1.22	4.0	8.0	Q3
LM4040AIM3X-5.0	SOT-23	DBZ	3	3000	178.0	8.4	3.3	2.9	1.22	4.0	8.0	Q3

Device	Package Type	Package Drawing	Pins	SPQ	Reel Diameter (mm)	Reel Width W1 (mm)	A0 (mm)	B0 (mm)	K0 (mm)	P1 (mm)	W (mm)	Pin1 Quadrant
LM4040AIM3X-5.0/NOPB	SOT-23	DBZ	3	3000	178.0	8.4	3.3	2.9	1.22	4.0	8.0	Q3
LM4040BIM3-10.0	SOT-23	DBZ	3	1000	178.0	8.4	3.3	2.9	1.22	4.0	8.0	Q3
LM4040BIM3-10.0/NOPB	SOT-23	DBZ	3	1000	178.0	8.4	3.3	2.9	1.22	4.0	8.0	Q3
LM4040BIM3-2.0/NOPB	SOT-23	DBZ	3	1000	178.0	8.4	3.3	2.9	1.22	4.0	8.0	Q3
LM4040BIM3-2.5	SOT-23	DBZ	3	1000	178.0	8.4	3.3	2.9	1.22	4.0	8.0	Q3
LM4040BIM3-2.5/NOPB	SOT-23	DBZ	3	1000	178.0	8.4	3.3	2.9	1.22	4.0	8.0	Q3
LM4040BIM3-3.0	SOT-23	DBZ	3	1000	178.0	8.4	3.3	2.9	1.22	4.0	8.0	Q3
LM4040BIM3-3.0/NOPB	SOT-23	DBZ	3	1000	178.0	8.4	3.3	2.9	1.22	4.0	8.0	Q3
LM4040BIM3-4.1	SOT-23	DBZ	3	1000	178.0	8.4	3.3	2.9	1.22	4.0	8.0	Q3
LM4040BIM3-4.1/NOPB	SOT-23	DBZ	3	1000	178.0	8.4	3.3	2.9	1.22	4.0	8.0	Q3
LM4040BIM3-5.0	SOT-23	DBZ	3	1000	178.0	8.4	3.3	2.9	1.22	4.0	8.0	Q3
LM4040BIM3-5.0/NOPB	SOT-23	DBZ	3	1000	178.0	8.4	3.3	2.9	1.22	4.0	8.0	Q3
LM4040BIM3-8.2	SOT-23	DBZ	3	1000	178.0	8.4	3.3	2.9	1.22	4.0	8.0	Q3
LM4040BIM3-8.2/NOPB	SOT-23	DBZ	3	1000	178.0	8.4	3.3	2.9	1.22	4.0	8.0	Q3
LM4040BIM3X-10/NOPB	SOT-23	DBZ	3	3000	178.0	8.4	3.3	2.9	1.22	4.0	8.0	Q3
LM4040BIM3X-2.0/NOPB	SOT-23	DBZ	3	3000	178.0	8.4	3.3	2.9	1.22	4.0	8.0	Q3
LM4040BIM3X-2.5	SOT-23	DBZ	3	3000	178.0	8.4	3.3	2.9	1.22	4.0	8.0	Q3
LM4040BIM3X-2.5/NOPB	SOT-23	DBZ	3	3000	178.0	8.4	3.3	2.9	1.22	4.0	8.0	Q3
LM4040BIM3X-3.0/NOPB	SOT-23	DBZ	3	3000	178.0	8.4	3.3	2.9	1.22	4.0	8.0	Q3
LM4040BIM3X-4.1	SOT-23	DBZ	3	3000	178.0	8.4	3.3	2.9	1.22	4.0	8.0	Q3
LM4040BIM3X-4.1/NOPB	SOT-23	DBZ	3	3000	178.0	8.4	3.3	2.9	1.22	4.0	8.0	Q3
LM4040BIM3X-5.0/NOPB	SOT-23	DBZ	3	3000	178.0	8.4	3.3	2.9	1.22	4.0	8.0	Q3
LM4040BIM7-2.0/NOPB	SC70	DCK	5	1000	178.0	8.4	2.25	2.45	1.2	4.0	8.0	Q3
LM4040BIM7-2.5	SC70	DCK	5	1000	178.0	8.4	2.25	2.45	1.2	4.0	8.0	Q3
LM4040BIM7-2.5/NOPB	SC70	DCK	5	1000	178.0	8.4	2.25	2.45	1.2	4.0	8.0	Q3
LM4040BIM7-5.0/NOPB	SC70	DCK	5	1000	178.0	8.4	2.25	2.45	1.2	4.0	8.0	Q3
LM4040BIM7X-2.5/NOPB	SC70	DCK	5	3000	178.0	8.4	2.25	2.45	1.2	4.0	8.0	Q3
LM4040CEM3-2.5	SOT-23	DBZ	3	1000	178.0	8.4	3.3	2.9	1.22	4.0	8.0	Q3
LM4040CEM3-2.5/NOPB	SOT-23	DBZ	3	1000	178.0	8.4	3.3	2.9	1.22	4.0	8.0	Q3
LM4040CEM3-3.0/NOPB	SOT-23	DBZ	3	1000	178.0	8.4	3.3	2.9	1.22	4.0	8.0	Q3
LM4040CEM3-5.0	SOT-23	DBZ	3	1000	178.0	8.4	3.3	2.9	1.22	4.0	8.0	Q3
LM4040CEM3-5.0/NOPB	SOT-23	DBZ	3	1000	178.0	8.4	3.3	2.9	1.22	4.0	8.0	Q3
LM4040CEM3X-3.0/NOPB	SOT-23	DBZ	3	3000	178.0	8.4	3.3	2.9	1.22	4.0	8.0	Q3
LM4040CEM3X-5.0/NOPB	SOT-23	DBZ	3	3000	178.0	8.4	3.3	2.9	1.22	4.0	8.0	Q3
LM4040CIM3-10.0	SOT-23	DBZ	3	1000	178.0	8.4	3.3	2.9	1.22	4.0	8.0	Q3
LM4040CIM3-10.0/NOPB	SOT-23	DBZ	3	1000	178.0	8.4	3.3	2.9	1.22	4.0	8.0	Q3
LM4040CIM3-2.0	SOT-23	DBZ	3	1000	178.0	8.4	3.3	2.9	1.22	4.0	8.0	Q3
LM4040CIM3-2.0/NOPB	SOT-23	DBZ	3	1000	178.0	8.4	3.3	2.9	1.22	4.0	8.0	Q3
LM4040CIM3-2.5	SOT-23	DBZ	3	1000	178.0	8.4	3.3	2.9	1.22	4.0	8.0	Q3
LM4040CIM3-2.5/NOPB	SOT-23	DBZ	3	1000	178.0	8.4	3.3	2.9	1.22	4.0	8.0	Q3
LM4040CIM3-3.0	SOT-23	DBZ	3	1000	178.0	8.4	3.3	2.9	1.22	4.0	8.0	Q3
LM4040CIM3-3.0/NOPB	SOT-23	DBZ	3	1000	178.0	8.4	3.3	2.9	1.22	4.0	8.0	Q3
LM4040CIM3-4.1	SOT-23	DBZ	3	1000	178.0	8.4	3.3	2.9	1.22	4.0	8.0	Q3

Device	Package Type	Package Drawing	Pins	SPQ	Reel Diameter (mm)	Reel Width W1 (mm)	A0 (mm)	B0 (mm)	K0 (mm)	P1 (mm)	W (mm)	Pin1 Quadrant
LM4040CIM3-4.1/NOPB	SOT-23	DBZ	3	1000	178.0	8.4	3.3	2.9	1.22	4.0	8.0	Q3
LM4040CIM3-5.0	SOT-23	DBZ	3	1000	178.0	8.4	3.3	2.9	1.22	4.0	8.0	Q3
LM4040CIM3-5.0/NOPB	SOT-23	DBZ	3	1000	178.0	8.4	3.3	2.9	1.22	4.0	8.0	Q3
LM4040CIM3-8.2	SOT-23	DBZ	3	1000	178.0	8.4	3.3	2.9	1.22	4.0	8.0	Q3
LM4040CIM3-8.2/NOPB	SOT-23	DBZ	3	1000	178.0	8.4	3.3	2.9	1.22	4.0	8.0	Q3
LM4040CIM3X-10/NOPB	SOT-23	DBZ	3	3000	178.0	8.4	3.3	2.9	1.22	4.0	8.0	Q3
LM4040CIM3X-2.0/NOPB	SOT-23	DBZ	3	3000	178.0	8.4	3.3	2.9	1.22	4.0	8.0	Q3
LM4040CIM3X-2.5	SOT-23	DBZ	3	3000	178.0	8.4	3.3	2.9	1.22	4.0	8.0	Q3
LM4040CIM3X-2.5/NOPB	SOT-23	DBZ	3	3000	178.0	8.4	3.3	2.9	1.22	4.0	8.0	Q3
LM4040CIM3X-3.0/NOPB	SOT-23	DBZ	3	3000	178.0	8.4	3.3	2.9	1.22	4.0	8.0	Q3
LM4040CIM3X-4.1/NOPB	SOT-23	DBZ	3	3000	178.0	8.4	3.3	2.9	1.22	4.0	8.0	Q3
LM4040CIM3X-5.0	SOT-23	DBZ	3	3000	178.0	8.4	3.3	2.9	1.22	4.0	8.0	Q3
LM4040CIM3X-5.0/NOPB	SOT-23	DBZ	3	3000	178.0	8.4	3.3	2.9	1.22	4.0	8.0	Q3
LM4040CIM7-2.0/NOPB	SC70	DCK	5	1000	178.0	8.4	2.25	2.45	1.2	4.0	8.0	Q3
LM4040CIM7-2.5/NOPB	SC70	DCK	5	1000	178.0	8.4	2.25	2.45	1.2	4.0	8.0	Q3
LM4040CIM7X-2.5/NOPB	SC70	DCK	5	3000	178.0	8.4	2.25	2.45	1.2	4.0	8.0	Q3
LM4040DEM3-2.0	SOT-23	DBZ	3	1000	178.0	8.4	3.3	2.9	1.22	4.0	8.0	Q3
LM4040DEM3-2.0/NOPB	SOT-23	DBZ	3	1000	178.0	8.4	3.3	2.9	1.22	4.0	8.0	Q3
LM4040DEM3-2.5/NOPB	SOT-23	DBZ	3	1000	178.0	8.4	3.3	2.9	1.22	4.0	8.0	Q3
LM4040DEM3-3.0/NOPB	SOT-23	DBZ	3	1000	178.0	8.4	3.3	2.9	1.22	4.0	8.0	Q3
LM4040DEM3-5.0	SOT-23	DBZ	3	1000	178.0	8.4	3.3	2.9	1.22	4.0	8.0	Q3
LM4040DEM3-5.0/NOPB	SOT-23	DBZ	3	1000	178.0	8.4	3.3	2.9	1.22	4.0	8.0	Q3
LM4040DEM3X-2.5/NOPB	SOT-23	DBZ	3	3000	178.0	8.4	3.3	2.9	1.22	4.0	8.0	Q3
LM4040DEM3X-5.0/NOPB	SOT-23	DBZ	3	3000	178.0	8.4	3.3	2.9	1.22	4.0	8.0	Q3
LM4040DIM3-10.0	SOT-23	DBZ	3	1000	178.0	8.4	3.3	2.9	1.22	4.0	8.0	Q3
LM4040DIM3-10.0/NOPB	SOT-23	DBZ	3	1000	178.0	8.4	3.3	2.9	1.22	4.0	8.0	Q3
LM4040DIM3-2.0/NOPB	SOT-23	DBZ	3	1000	178.0	8.4	3.3	2.9	1.22	4.0	8.0	Q3
LM4040DIM3-2.5	SOT-23	DBZ	3	1000	178.0	8.4	3.3	2.9	1.22	4.0	8.0	Q3
LM4040DIM3-2.5/NOPB	SOT-23	DBZ	3	1000	178.0	8.4	3.3	2.9	1.22	4.0	8.0	Q3
LM4040DIM3-3.0/NOPB	SOT-23	DBZ	3	1000	178.0	8.4	3.3	2.9	1.22	4.0	8.0	Q3
LM4040DIM3-4.1	SOT-23	DBZ	3	1000	178.0	8.4	3.3	2.9	1.22	4.0	8.0	Q3
LM4040DIM3-4.1/NOPB	SOT-23	DBZ	3	1000	178.0	8.4	3.3	2.9	1.22	4.0	8.0	Q3
LM4040DIM3-5.0	SOT-23	DBZ	3	1000	178.0	8.4	3.3	2.9	1.22	4.0	8.0	Q3
LM4040DIM3-5.0/NOPB	SOT-23	DBZ	3	1000	178.0	8.4	3.3	2.9	1.22	4.0	8.0	Q3
LM4040DIM3-8.2/NOPB	SOT-23	DBZ	3	1000	178.0	8.4	3.3	2.9	1.22	4.0	8.0	Q3
LM4040DIM3X-10/NOPB	SOT-23	DBZ	3	3000	178.0	8.4	3.3	2.9	1.22	4.0	8.0	Q3
LM4040DIM3X-2.0/NOPB	SOT-23	DBZ	3	3000	178.0	8.4	3.3	2.9	1.22	4.0	8.0	Q3
LM4040DIM3X-2.5	SOT-23	DBZ	3	3000	178.0	8.4	3.3	2.9	1.22	4.0	8.0	Q3
LM4040DIM3X-2.5/NOPB	SOT-23	DBZ	3	3000	178.0	8.4	3.3	2.9	1.22	4.0	8.0	Q3
LM4040DIM3X-3.0/NOPB	SOT-23	DBZ	3	3000	178.0	8.4	3.3	2.9	1.22	4.0	8.0	Q3
LM4040DIM3X-4.1/NOPB	SOT-23	DBZ	3	3000	178.0	8.4	3.3	2.9	1.22	4.0	8.0	Q3
LM4040DIM3X-5.0	SOT-23	DBZ	3	3000	178.0	8.4	3.3	2.9	1.22	4.0	8.0	Q3
LM4040DIM3X-5.0/NOPB	SOT-23	DBZ	3	3000	178.0	8.4	3.3	2.9	1.22	4.0	8.0	Q3

Device	Package Type	Package Drawing	Pins	SPQ	Reel Diameter (mm)	Reel Width W1 (mm)	A0 (mm)	B0 (mm)	K0 (mm)	P1 (mm)	W (mm)	Pin1 Quadrant
LM4040DIM7-2.0/NOPB	SC70	DCK	5	1000	178.0	8.4	2.25	2.45	1.2	4.0	8.0	Q3
LM4040DIM7-2.5/NOPB	SC70	DCK	5	1000	178.0	8.4	2.25	2.45	1.2	4.0	8.0	Q3
LM4040DIM7-5.0	SC70	DCK	5	1000	178.0	8.4	2.25	2.45	1.2	4.0	8.0	Q3
LM4040DIM7-5.0/NOPB	SC70	DCK	5	1000	178.0	8.4	2.25	2.45	1.2	4.0	8.0	Q3
LM4040EEM3-2.5/NOPB	SOT-23	DBZ	3	1000	178.0	8.4	3.3	2.9	1.22	4.0	8.0	Q3
LM4040EIM3-2.5	SOT-23	DBZ	3	1000	178.0	8.4	3.3	2.9	1.22	4.0	8.0	Q3
LM4040EIM3-2.5/NOPB	SOT-23	DBZ	3	1000	178.0	8.4	3.3	2.9	1.22	4.0	8.0	Q3
LM4040EIM3-3.0/NOPB	SOT-23	DBZ	3	1000	178.0	8.4	3.3	2.9	1.22	4.0	8.0	Q3
LM4040EIM3X-2.5	SOT-23	DBZ	3	3000	178.0	8.4	3.3	2.9	1.22	4.0	8.0	Q3
LM4040EIM3X-2.5/NOPB	SOT-23	DBZ	3	3000	178.0	8.4	3.3	2.9	1.22	4.0	8.0	Q3
LM4040EIM3X-3.0/NOPB	SOT-23	DBZ	3	3000	178.0	8.4	3.3	2.9	1.22	4.0	8.0	Q3
LM4040EIM7-2.0/NOPB	SC70	DCK	5	1000	178.0	8.4	2.25	2.45	1.2	4.0	8.0	Q3
LM4040QAIM3-2.5/NOPB	SOT-23	DBZ	3	1000	178.0	8.4	3.3	2.9	1.22	4.0	8.0	Q3
LM4040QAIM3X2.5/NOPB	SOT-23	DBZ	3	3000	178.0	8.4	3.3	2.9	1.22	4.0	8.0	Q3
LM4040QBIM3-2.5/NOPB	SOT-23	DBZ	3	1000	178.0	8.4	3.3	2.9	1.22	4.0	8.0	Q3
LM4040QBIM3X2.5/NOPB	SOT-23	DBZ	3	3000	178.0	8.4	3.3	2.9	1.22	4.0	8.0	Q3
LM4040QCEM3-2.5/NOPB	SOT-23	DBZ	3	1000	178.0	8.4	3.3	2.9	1.22	4.0	8.0	Q3
LM4040QCEM3-3.0/NOPB	SOT-23	DBZ	3	1000	178.0	8.4	3.3	2.9	1.22	4.0	8.0	Q3
LM4040QCIM3-2.5/NOPB	SOT-23	DBZ	3	1000	178.0	8.4	3.3	2.9	1.22	4.0	8.0	Q3
LM4040QCIM3X2.5/NOPB	SOT-23	DBZ	3	3000	178.0	8.4	3.3	2.9	1.22	4.0	8.0	Q3
LM4040QDEM3-2.5/NOPB	SOT-23	DBZ	3	1000	178.0	8.4	3.3	2.9	1.22	4.0	8.0	Q3
LM4040QDEM3-3.0/NOPB	SOT-23	DBZ	3	1000	178.0	8.4	3.3	2.9	1.22	4.0	8.0	Q3
LM4040QDIM3-2.5/NOPB	SOT-23	DBZ	3	1000	178.0	8.4	3.3	2.9	1.22	4.0	8.0	Q3
LM4040QDIM3X2.5/NOPB	SOT-23	DBZ	3	3000	178.0	8.4	3.3	2.9	1.22	4.0	8.0	Q3
LM4040QEEM3-2.5/NOPB	SOT-23	DBZ	3	1000	178.0	8.4	3.3	2.9	1.22	4.0	8.0	Q3
LM4040QEEM3-3.0/NOPB	SOT-23	DBZ	3	1000	178.0	8.4	3.3	2.9	1.22	4.0	8.0	Q3
LM4040QEIM3-2.5/NOPB	SOT-23	DBZ	3	1000	178.0	8.4	3.3	2.9	1.22	4.0	8.0	Q3
LM4040QEIM3X2.5/NOPB	SOT-23	DBZ	3	3000	178.0	8.4	3.3	2.9	1.22	4.0	8.0	Q3

TAPE AND REEL BOX DIMENSIONS

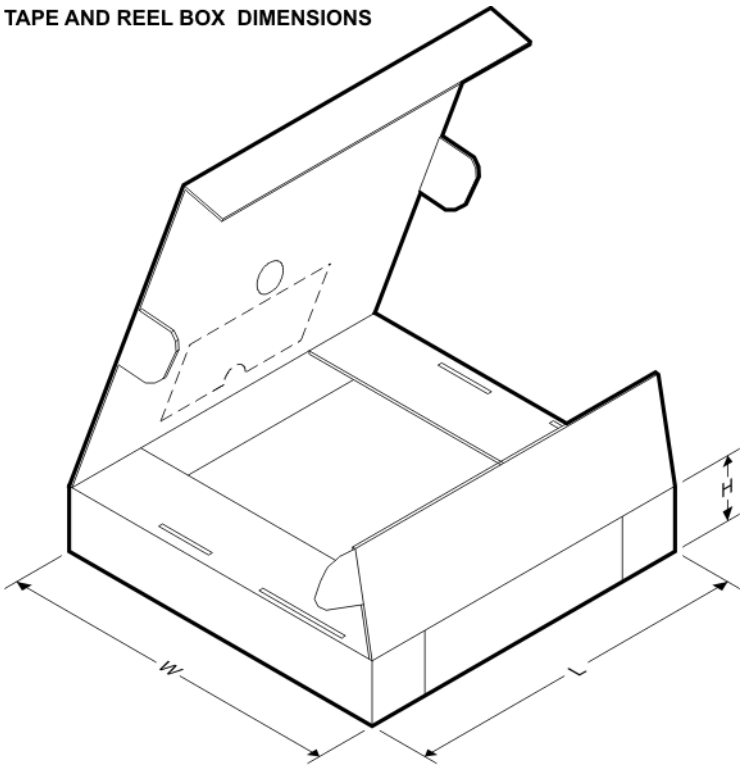

*All dimensions are nominal

Device	Package Type	Package Drawing	Pins	SPQ	Length (mm)	Width (mm)	Height (mm)
LM4040AIM3-10.0	SOT-23	DBZ	3	1000	208.0	191.0	35.0
LM4040AIM3-10.0/NOPB	SOT-23	DBZ	3	1000	208.0	191.0	35.0
LM4040AIM3-2.0	SOT-23	DBZ	3	1000	208.0	191.0	35.0
LM4040AIM3-2.0/NOPB	SOT-23	DBZ	3	1000	208.0	191.0	35.0
LM4040AIM3-2.5	SOT-23	DBZ	3	1000	208.0	191.0	35.0
LM4040AIM3-2.5/NOPB	SOT-23	DBZ	3	1000	208.0	191.0	35.0
LM4040AIM3-3.0/NOPB	SOT-23	DBZ	3	1000	208.0	191.0	35.0
LM4040AIM3-4.1	SOT-23	DBZ	3	1000	208.0	191.0	35.0
LM4040AIM3-4.1/NOPB	SOT-23	DBZ	3	1000	208.0	191.0	35.0
LM4040AIM3-5.0	SOT-23	DBZ	3	1000	208.0	191.0	35.0
LM4040AIM3-5.0/NOPB	SOT-23	DBZ	3	1000	208.0	191.0	35.0
LM4040AIM3X-10/NOPB	SOT-23	DBZ	3	3000	208.0	191.0	35.0
LM4040AIM3X-2.0/NOPB	SOT-23	DBZ	3	3000	208.0	191.0	35.0
LM4040AIM3X-2.5	SOT-23	DBZ	3	3000	208.0	191.0	35.0
LM4040AIM3X-2.5/NOPB	SOT-23	DBZ	3	3000	208.0	191.0	35.0
LM4040AIM3X-3.0/NOPB	SOT-23	DBZ	3	3000	208.0	191.0	35.0
LM4040AIM3X-4.1/NOPB	SOT-23	DBZ	3	3000	208.0	191.0	35.0
LM4040AIM3X-5.0	SOT-23	DBZ	3	3000	208.0	191.0	35.0
LM4040AIM3X-5.0/NOPB	SOT-23	DBZ	3	3000	208.0	191.0	35.0
LM4040BIM3-10.0	SOT-23	DBZ	3	1000	208.0	191.0	35.0

Device	Package Type	Package Drawing	Pins	SPQ	Length (mm)	Width (mm)	Height (mm)
LM4040BIM3-10.0/NOPB	SOT-23	DBZ	3	1000	208.0	191.0	35.0
LM4040BIM3-2.0/NOPB	SOT-23	DBZ	3	1000	208.0	191.0	35.0
LM4040BIM3-2.5	SOT-23	DBZ	3	1000	208.0	191.0	35.0
LM4040BIM3-2.5/NOPB	SOT-23	DBZ	3	1000	208.0	191.0	35.0
LM4040BIM3-3.0	SOT-23	DBZ	3	1000	208.0	191.0	35.0
LM4040BIM3-3.0/NOPB	SOT-23	DBZ	3	1000	208.0	191.0	35.0
LM4040BIM3-4.1	SOT-23	DBZ	3	1000	208.0	191.0	35.0
LM4040BIM3-4.1/NOPB	SOT-23	DBZ	3	1000	208.0	191.0	35.0
LM4040BIM3-5.0	SOT-23	DBZ	3	1000	208.0	191.0	35.0
LM4040BIM3-5.0/NOPB	SOT-23	DBZ	3	1000	208.0	191.0	35.0
LM4040BIM3-8.2	SOT-23	DBZ	3	1000	208.0	191.0	35.0
LM4040BIM3-8.2/NOPB	SOT-23	DBZ	3	1000	208.0	191.0	35.0
LM4040BIM3X-10/NOPB	SOT-23	DBZ	3	3000	208.0	191.0	35.0
LM4040BIM3X-2.0/NOPB	SOT-23	DBZ	3	3000	208.0	191.0	35.0
LM4040BIM3X-2.5	SOT-23	DBZ	3	3000	210.0	185.0	35.0
LM4040BIM3X-2.5/NOPB	SOT-23	DBZ	3	3000	208.0	191.0	35.0
LM4040BIM3X-3.0/NOPB	SOT-23	DBZ	3	3000	208.0	191.0	35.0
LM4040BIM3X-4.1	SOT-23	DBZ	3	3000	208.0	191.0	35.0
LM4040BIM3X-4.1/NOPB	SOT-23	DBZ	3	3000	208.0	191.0	35.0
LM4040BIM3X-5.0/NOPB	SOT-23	DBZ	3	3000	208.0	191.0	35.0
LM4040BIM7-2.0/NOPB	SC70	DCK	5	1000	208.0	191.0	35.0
LM4040BIM7-2.5	SC70	DCK	5	1000	208.0	191.0	35.0
LM4040BIM7-2.5/NOPB	SC70	DCK	5	1000	208.0	191.0	35.0
LM4040BIM7-5.0/NOPB	SC70	DCK	5	1000	208.0	191.0	35.0
LM4040BIM7X-2.5/NOPB	SC70	DCK	5	3000	208.0	191.0	35.0
LM4040CEM3-2.5	SOT-23	DBZ	3	1000	208.0	191.0	35.0
LM4040CEM3-2.5/NOPB	SOT-23	DBZ	3	1000	208.0	191.0	35.0
LM4040CEM3-3.0/NOPB	SOT-23	DBZ	3	1000	208.0	191.0	35.0
LM4040CEM3-5.0	SOT-23	DBZ	3	1000	208.0	191.0	35.0
LM4040CEM3-5.0/NOPB	SOT-23	DBZ	3	1000	208.0	191.0	35.0
LM4040CEM3X-3.0/NOPB	SOT-23	DBZ	3	3000	208.0	191.0	35.0
LM4040CEM3X-5.0/NOPB	SOT-23	DBZ	3	3000	208.0	191.0	35.0
LM4040CIM3-10.0	SOT-23	DBZ	3	1000	208.0	191.0	35.0
LM4040CIM3-10.0/NOPB	SOT-23	DBZ	3	1000	208.0	191.0	35.0
LM4040CIM3-2.0	SOT-23	DBZ	3	1000	208.0	191.0	35.0
LM4040CIM3-2.0/NOPB	SOT-23	DBZ	3	1000	208.0	191.0	35.0
LM4040CIM3-2.5	SOT-23	DBZ	3	1000	208.0	191.0	35.0
LM4040CIM3-2.5/NOPB	SOT-23	DBZ	3	1000	208.0	191.0	35.0
LM4040CIM3-3.0	SOT-23	DBZ	3	1000	208.0	191.0	35.0
LM4040CIM3-3.0/NOPB	SOT-23	DBZ	3	1000	208.0	191.0	35.0
LM4040CIM3-4.1	SOT-23	DBZ	3	1000	208.0	191.0	35.0
LM4040CIM3-4.1/NOPB	SOT-23	DBZ	3	1000	208.0	191.0	35.0
LM4040CIM3-5.0	SOT-23	DBZ	3	1000	208.0	191.0	35.0
LM4040CIM3-5.0/NOPB	SOT-23	DBZ	3	1000	208.0	191.0	35.0

Device	Package Type	Package Drawing	Pins	SPQ	Length (mm)	Width (mm)	Height (mm)
LM4040CIM3-8.2	SOT-23	DBZ	3	1000	208.0	191.0	35.0
LM4040CIM3-8.2/NOPB	SOT-23	DBZ	3	1000	208.0	191.0	35.0
LM4040CIM3X-10/NOPB	SOT-23	DBZ	3	3000	208.0	191.0	35.0
LM4040CIM3X-2.0/NOPB	SOT-23	DBZ	3	3000	208.0	191.0	35.0
LM4040CIM3X-2.5	SOT-23	DBZ	3	3000	208.0	191.0	35.0
LM4040CIM3X-2.5/NOPB	SOT-23	DBZ	3	3000	208.0	191.0	35.0
LM4040CIM3X-3.0/NOPB	SOT-23	DBZ	3	3000	208.0	191.0	35.0
LM4040CIM3X-4.1/NOPB	SOT-23	DBZ	3	3000	208.0	191.0	35.0
LM4040CIM3X-5.0	SOT-23	DBZ	3	3000	208.0	191.0	35.0
LM4040CIM3X-5.0/NOPB	SOT-23	DBZ	3	3000	208.0	191.0	35.0
LM4040CIM7-2.0/NOPB	SC70	DCK	5	1000	208.0	191.0	35.0
LM4040CIM7-2.5/NOPB	SC70	DCK	5	1000	208.0	191.0	35.0
LM4040CIM7X-2.5/NOPB	SC70	DCK	5	3000	208.0	191.0	35.0
LM4040DEM3-2.0	SOT-23	DBZ	3	1000	208.0	191.0	35.0
LM4040DEM3-2.0/NOPB	SOT-23	DBZ	3	1000	208.0	191.0	35.0
LM4040DEM3-2.5/NOPB	SOT-23	DBZ	3	1000	208.0	191.0	35.0
LM4040DEM3-3.0/NOPB	SOT-23	DBZ	3	1000	208.0	191.0	35.0
LM4040DEM3-5.0	SOT-23	DBZ	3	1000	208.0	191.0	35.0
LM4040DEM3-5.0/NOPB	SOT-23	DBZ	3	1000	208.0	191.0	35.0
LM4040DEM3X-2.5/NOPB	SOT-23	DBZ	3	3000	208.0	191.0	35.0
LM4040DEM3X-5.0/NOPB	SOT-23	DBZ	3	3000	208.0	191.0	35.0
LM4040DIM3-10.0	SOT-23	DBZ	3	1000	208.0	191.0	35.0
LM4040DIM3-10.0/NOPB	SOT-23	DBZ	3	1000	208.0	191.0	35.0
LM4040DIM3-2.0/NOPB	SOT-23	DBZ	3	1000	208.0	191.0	35.0
LM4040DIM3-2.5	SOT-23	DBZ	3	1000	208.0	191.0	35.0
LM4040DIM3-2.5/NOPB	SOT-23	DBZ	3	1000	208.0	191.0	35.0
LM4040DIM3-3.0/NOPB	SOT-23	DBZ	3	1000	208.0	191.0	35.0
LM4040DIM3-4.1	SOT-23	DBZ	3	1000	208.0	191.0	35.0
LM4040DIM3-4.1/NOPB	SOT-23	DBZ	3	1000	208.0	191.0	35.0
LM4040DIM3-5.0	SOT-23	DBZ	3	1000	208.0	191.0	35.0
LM4040DIM3-5.0/NOPB	SOT-23	DBZ	3	1000	208.0	191.0	35.0
LM4040DIM3-8.2/NOPB	SOT-23	DBZ	3	1000	208.0	191.0	35.0
LM4040DIM3X-10/NOPB	SOT-23	DBZ	3	3000	208.0	191.0	35.0
LM4040DIM3X-2.0/NOPB	SOT-23	DBZ	3	3000	208.0	191.0	35.0
LM4040DIM3X-2.5	SOT-23	DBZ	3	3000	208.0	191.0	35.0
LM4040DIM3X-2.5/NOPB	SOT-23	DBZ	3	3000	208.0	191.0	35.0
LM4040DIM3X-3.0/NOPB	SOT-23	DBZ	3	3000	208.0	191.0	35.0
LM4040DIM3X-4.1/NOPB	SOT-23	DBZ	3	3000	208.0	191.0	35.0
LM4040DIM3X-5.0	SOT-23	DBZ	3	3000	208.0	191.0	35.0
LM4040DIM3X-5.0/NOPB	SOT-23	DBZ	3	3000	208.0	191.0	35.0
LM4040DIM7-2.0/NOPB	SC70	DCK	5	1000	208.0	191.0	35.0
LM4040DIM7-2.5/NOPB	SC70	DCK	5	1000	208.0	191.0	35.0
LM4040DIM7-5.0	SC70	DCK	5	1000	208.0	191.0	35.0
LM4040DIM7-5.0/NOPB	SC70	DCK	5	1000	208.0	191.0	35.0

Device	Package Type	Package Drawing	Pins	SPQ	Length (mm)	Width (mm)	Height (mm)
LM4040EEM3-2.5/NOPB	SOT-23	DBZ	3	1000	208.0	191.0	35.0
LM4040EIM3-2.5	SOT-23	DBZ	3	1000	208.0	191.0	35.0
LM4040EIM3-2.5/NOPB	SOT-23	DBZ	3	1000	208.0	191.0	35.0
LM4040EIM3-3.0/NOPB	SOT-23	DBZ	3	1000	208.0	191.0	35.0
LM4040EIM3X-2.5	SOT-23	DBZ	3	3000	208.0	191.0	35.0
LM4040EIM3X-2.5/NOPB	SOT-23	DBZ	3	3000	208.0	191.0	35.0
LM4040EIM3X-3.0/NOPB	SOT-23	DBZ	3	3000	208.0	191.0	35.0
LM4040EIM7-2.0/NOPB	SC70	DCK	5	1000	208.0	191.0	35.0
LM4040QAIM3-2.5/NOPB	SOT-23	DBZ	3	1000	208.0	191.0	35.0
LM4040QAIM3X2.5/NOPB	SOT-23	DBZ	3	3000	208.0	191.0	35.0
LM4040QBIM3-2.5/NOPB	SOT-23	DBZ	3	1000	208.0	191.0	35.0
LM4040QBIM3X2.5/NOPB	SOT-23	DBZ	3	3000	208.0	191.0	35.0
LM4040QCEM3-2.5/NOPB	SOT-23	DBZ	3	1000	208.0	191.0	35.0
LM4040QCEM3-3.0/NOPB	SOT-23	DBZ	3	1000	208.0	191.0	35.0
LM4040QCIM3-2.5/NOPB	SOT-23	DBZ	3	1000	208.0	191.0	35.0
LM4040QCIM3X2.5/NOPB	SOT-23	DBZ	3	3000	208.0	191.0	35.0
LM4040QDEM3-2.5/NOPB	SOT-23	DBZ	3	1000	208.0	191.0	35.0
LM4040QDEM3-3.0/NOPB	SOT-23	DBZ	3	1000	208.0	191.0	35.0
LM4040QDIM3-2.5/NOPB	SOT-23	DBZ	3	1000	208.0	191.0	35.0
LM4040QDIM3X2.5/NOPB	SOT-23	DBZ	3	3000	208.0	191.0	35.0
LM4040QEEM3-2.5/NOPB	SOT-23	DBZ	3	1000	208.0	191.0	35.0
LM4040QEEM3-3.0/NOPB	SOT-23	DBZ	3	1000	208.0	191.0	35.0
LM4040QEIM3-2.5/NOPB	SOT-23	DBZ	3	1000	208.0	191.0	35.0
LM4040QEIM3X2.5/NOPB	SOT-23	DBZ	3	3000	208.0	191.0	35.0

GENERIC PACKAGE VIEW

LP 3 TO-92 - 5.34 mm max height

TRANSISTOR OUTLINE



Images above are just a representation of the package family, actual package may vary.
Refer to the product data sheet for package details.

LP0003A





PACKAGE OUTLINE

TO-92 - 5.34 mm max height

TO-92

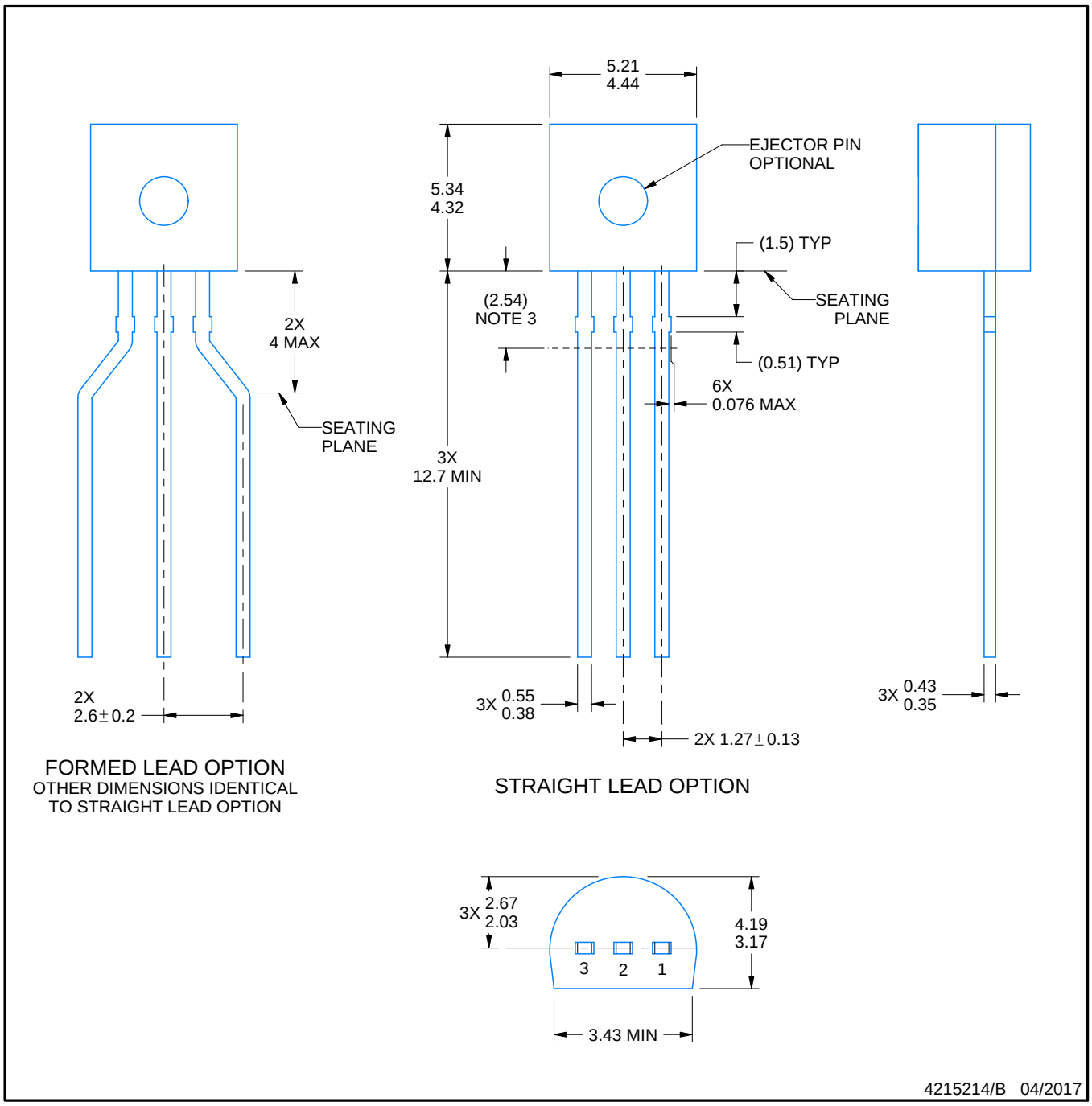

NOTES:

1. All linear dimensions are in millimeters. Any dimensions in parenthesis are for reference only. Dimensioning and tolerancing per ASME Y14.5M.
2. This drawing is subject to change without notice.
3. Lead dimensions are not controlled within this area.
4. Reference JEDEC TO-226, variation AA.
5. Shipping method:
   a. Straight lead option available in bulk pack only.
   b. Formed lead option available in tape and reel or ammo pack.
   c. Specific products can be offered in limited combinations of shipping medium and lead options.
   d. Consult product folder for more information on available options.

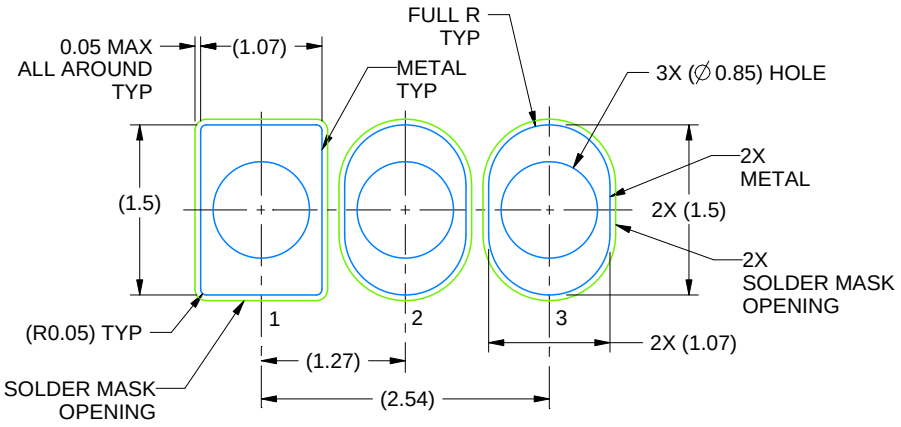

LAND PATTERN EXAMPLE
STRAIGHT LEAD OPTION
NON-SOLDER MASK DEFINED
SCALE:15X

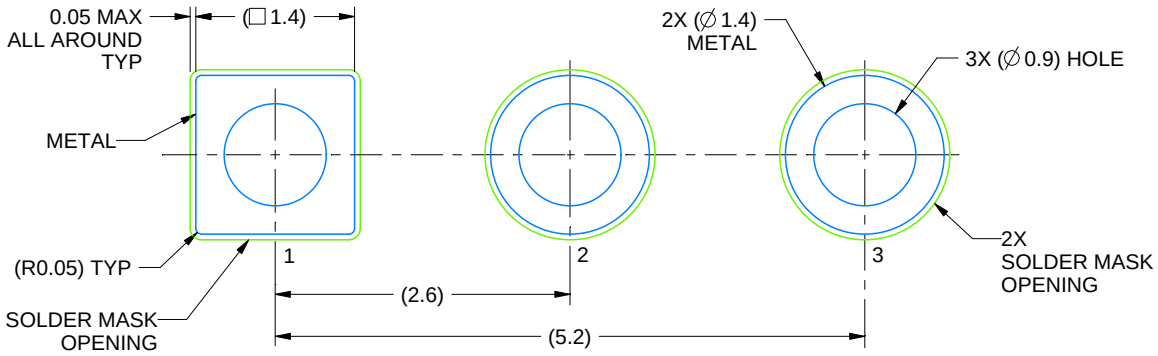

LAND PATTERN EXAMPLE
FORMED LEAD OPTION
NON-SOLDER MASK DEFINED
SCALE:15X

4215214/B 04/2017

LP0003A

TO-92 - 5.34 mm max height

TO-92

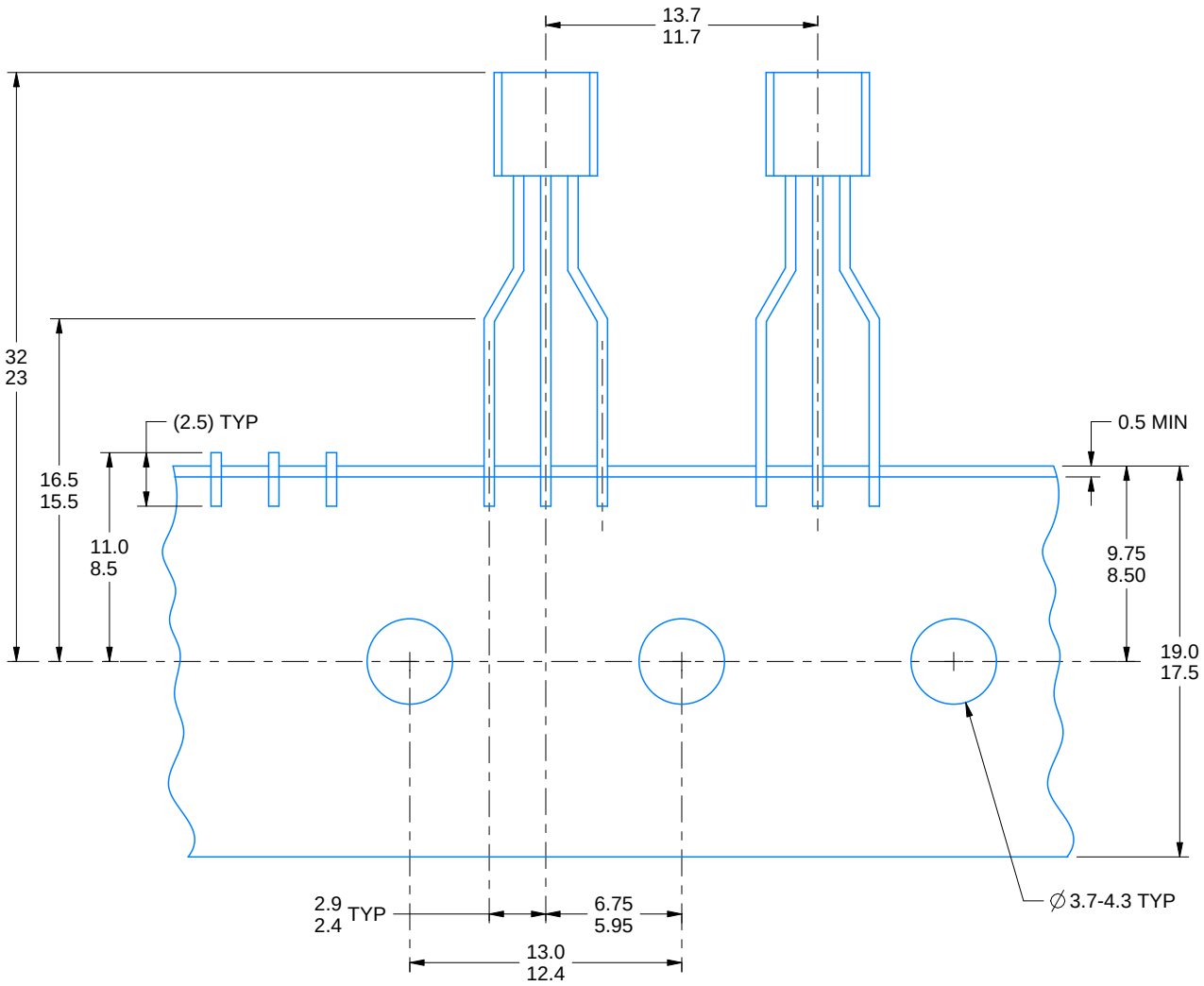

FOR FORMED LEAD OPTION PACKAGE

4215214/B 04/2017

DCK (R–PDSO–G5) PLASTIC SMALL–OUTLINE PACKAGE

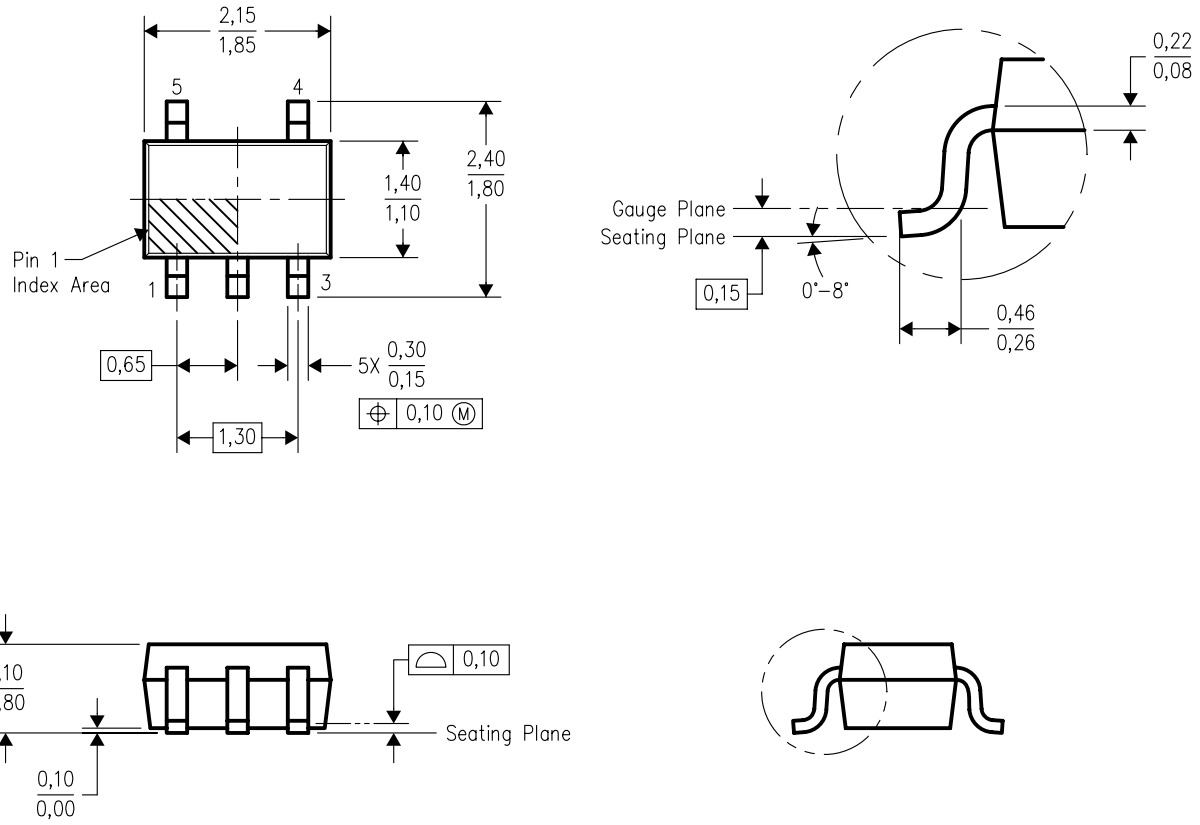

4093553–3/G 01/2007

NOTES:
A. All linear dimensions are in millimeters.
B. This drawing is subject to change without notice.
C. Body dimensions do not include mold flash or protrusion. Mold flash and protrusion shall not exceed 0.15 per side.
D. Falls within JEDEC MO–203 variation AA.

DCK (R–PDSO–G5) PLASTIC SMALL OUTLINE

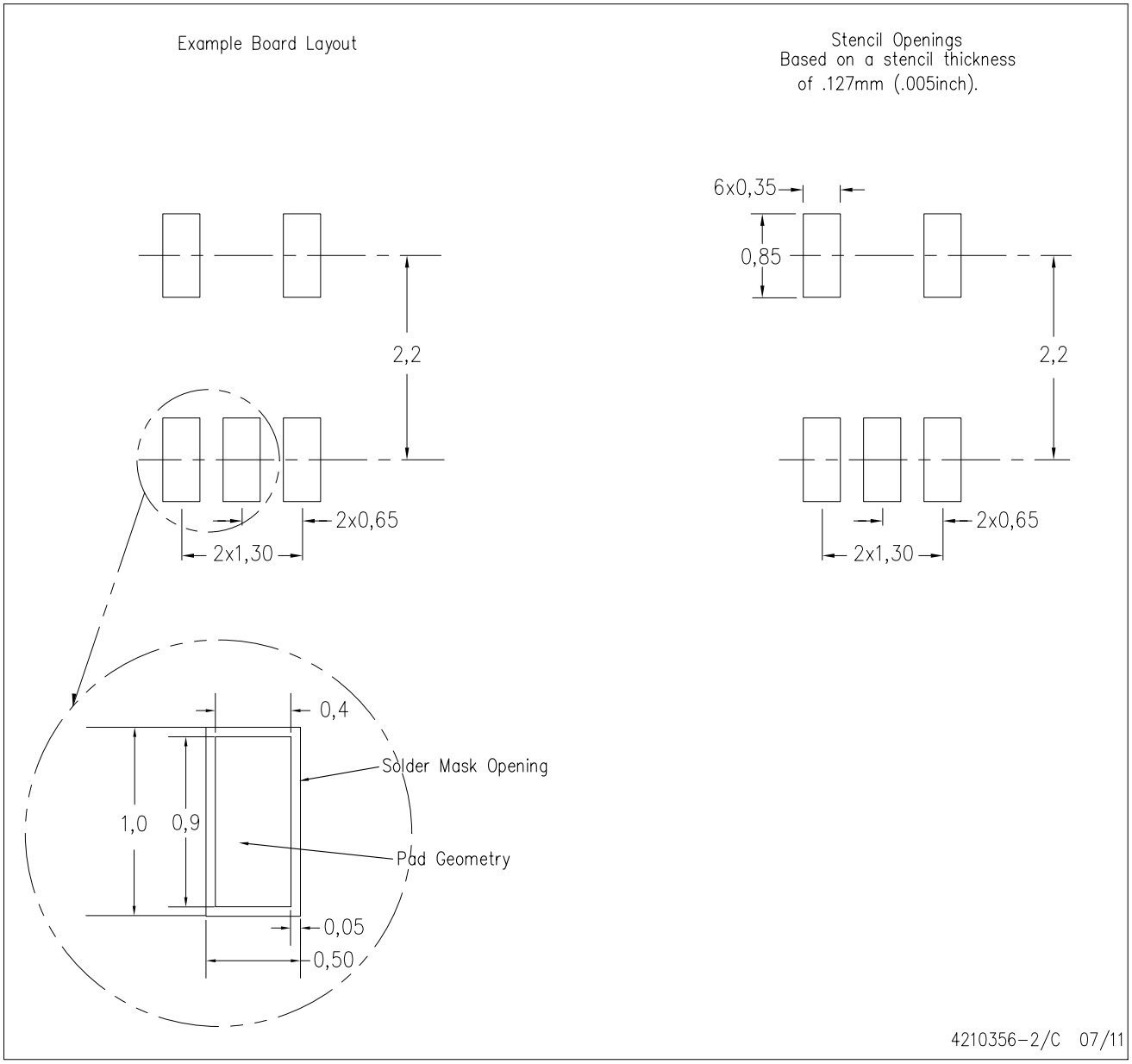

NOTES:
A. All linear dimensions are in millimeters.
B. This drawing is subject to change without notice.
C. Customers should place a note on the circuit board fabrication drawing not to alter the center solder mask defined pad.
D. Publication IPC–7351 is recommended for alternate designs.
E. Laser cutting apertures with trapezoidal walls and also rounding corners will offer better paste release. Customers should contact their board assembly site for stencil design recommendations. Example stencil design based on a 50% volumetric metal load solder paste. Refer to IPC–7525 for other stencil recommendations.

GENERIC PACKAGE VIEW

DBZ 3 SOT-23 - 1.12 mm max height

SMALL OUTLINE TRANSISTOR

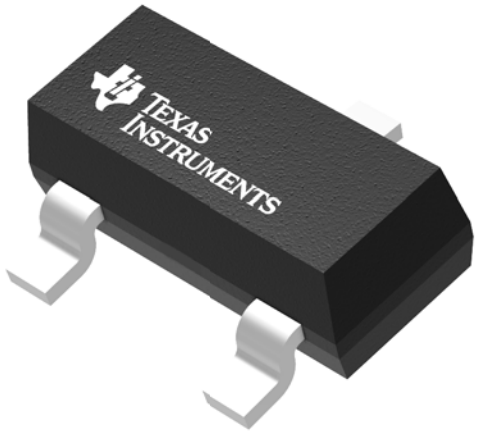

Images above are just a representation of the package family, actual package may vary.
Refer to the product data sheet for package details.

PACKAGE OUTLINE

DBZ0003A

SOT-23 - 1.12 mm max height

SMALL OUTLINE TRANSISTOR

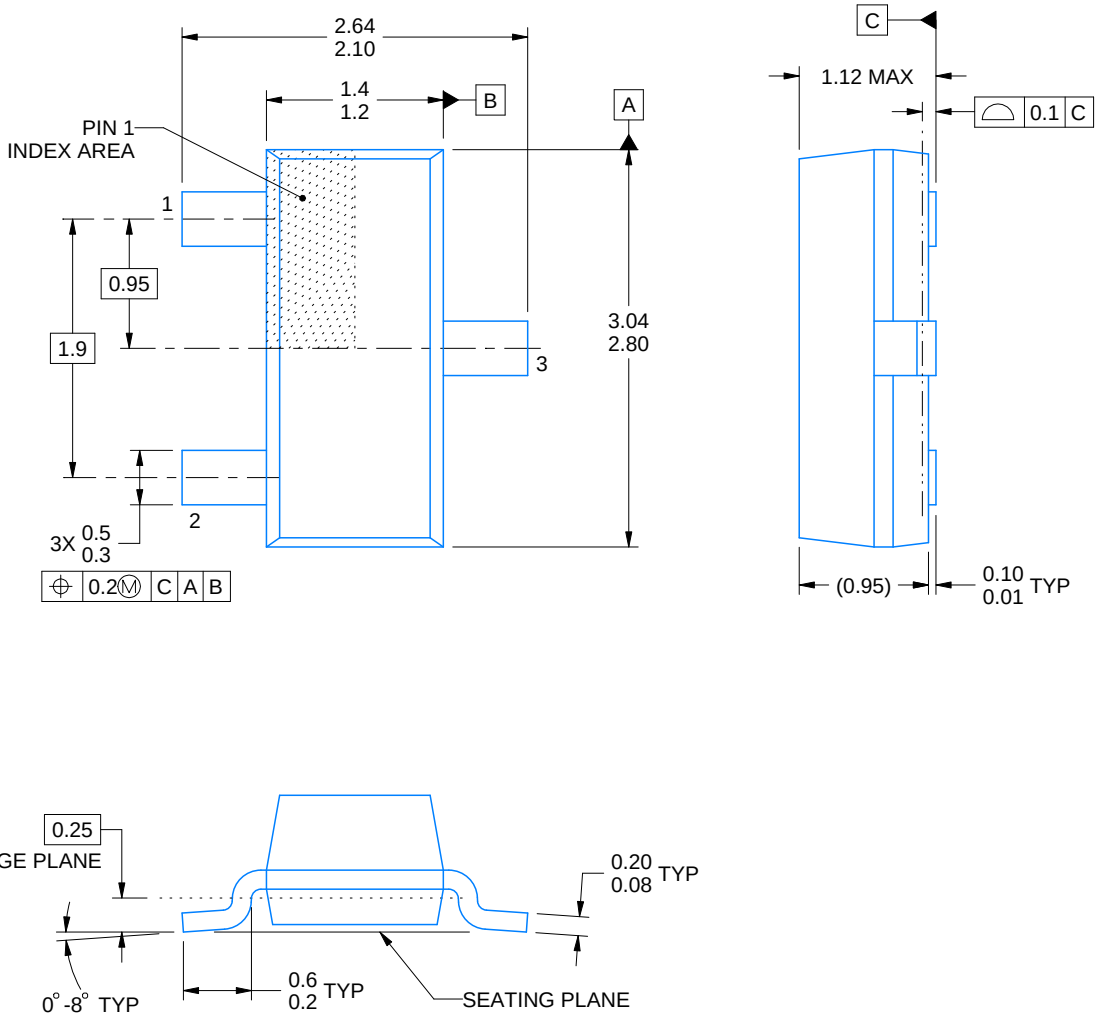

4214838/C 04/2017

NOTES:

1. All linear dimensions are in millimeters. Any dimensions in parenthesis are for reference only. Dimensioning and tolerancing per ASME Y14.5M.
2. This drawing is subject to change without notice.
3. Reference JEDEC registration TO-236, except minimum foot length.

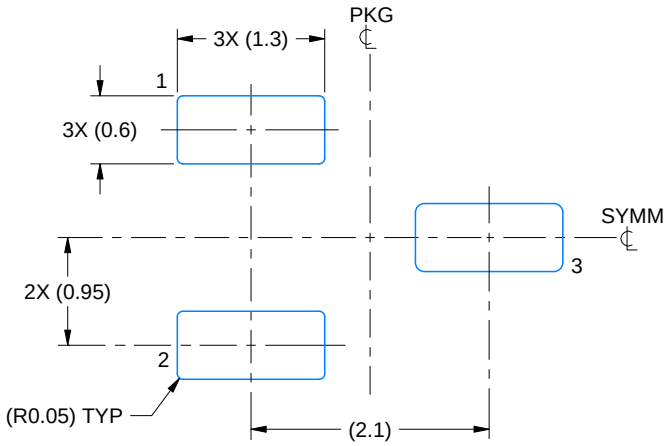

LAND PATTERN EXAMPLE
SCALE:15X

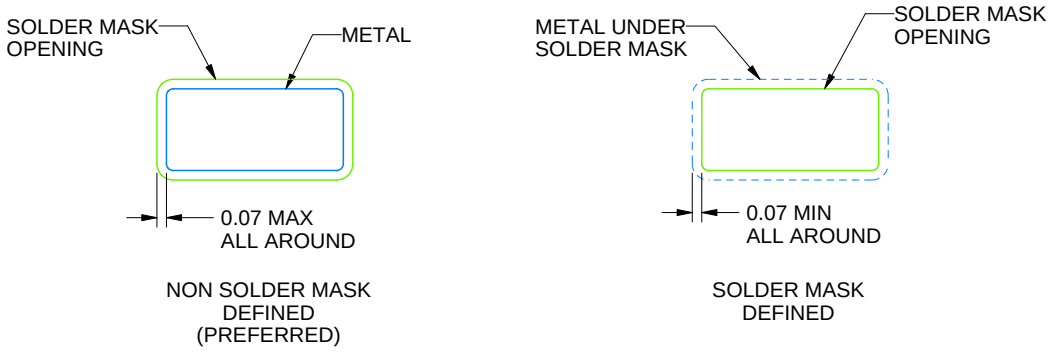

SOLDER MASK DETAILS

4214838/C 04/2017

NOTES: (continued)

4. Publication IPC-7351 may have alternate designs.
5. Solder mask tolerances between and around signal pads can vary based on board fabrication site.

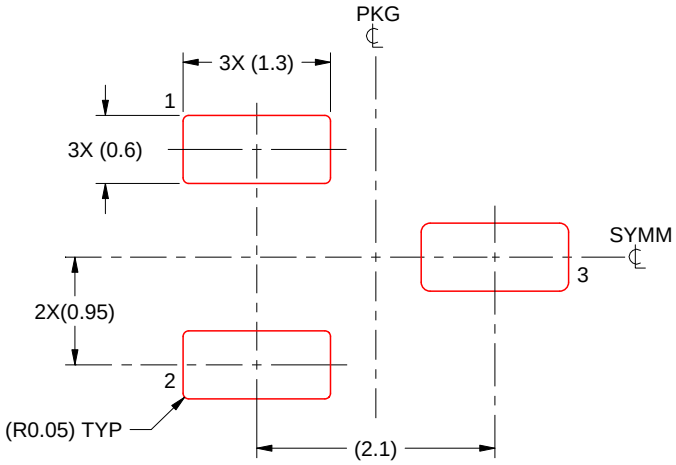

SOLDER PASTE EXAMPLE
BASED ON 0.125 THICK STENCIL
SCALE:15X

4214838/C 04/2017

NOTES: (continued)

6. Laser cutting apertures with trapezoidal walls and rounded corners may offer better paste release. IPC-7525 may have alternate design recommendations.
7. Board assembly site may have different recommendations for stencil design.

重要声明和免责声明

TI“按原样”提供技术和可靠性数据（包括数据表）、设计资源（包括参考设计）、应用或其他设计建议、网络工具、安全信息和其他资源，不保证没有瑕疵且不做出任何明示或暗示的担保，包括但不限于对适销性、某特定用途方面的适用性或不侵犯任何第三方知识产权的暗示担保。

这些资源可供使用 TI 产品进行设计的熟练开发人员使用。您将自行承担以下全部责任：(1) 针对您的应用选择合适的 TI 产品，(2) 设计、验证并测试您的应用，(3) 确保您的应用满足相应标准以及任何其他功能安全、信息安全、监管或其他要求。

这些资源如有变更，恕不另行通知。TI 授权您仅可将这些资源用于研发本资源所述的 TI 产品的应用。严禁对这些资源进行其他复制或展示。您无权使用任何其他 TI 知识产权或任何第三方知识产权。您应全额赔偿因在这些资源的使用中对 TI 及其代表造成的任何索赔、损害、成本、损失和债务，TI 对此概不负责。

TI 提供的产品受 TI 的销售条款或 ti.com 上其他适用条款/TI 产品随附的其他适用条款的约束。TI 提供这些资源并不会扩展或以其他方式更改 TI 针对 TI 产品发布的适用的担保或担保免责声明。

TI 反对并拒绝您可能提出的任何其他或不同的条款。

邮寄地址：Texas Instruments, Post Office Box 655303, Dallas, Texas 75265
Copyright © 2021，德州仪器 (TI) 公司