CURRENT-LIMITED POWER-DISTRIBUTION SWITCHES

FEATURES

- **80-mΩ High-Side MOSFET Switch**
- **250 mA Continuous Current Per Channel**
- **Independent Thermal and Short-Circuit Protection With Overcurrent Logic Output**
- **Operating Range: 2.7-V to 5.5-V**
- **CMOS- and TTL-Compatible Enable Inputs**
- **2.5-ms Typical Rise Time**
- **Undervoltage Lockout**
- **10 μA Maximum Standby Supply Current for Single and Dual (20 μA for Triple and Quad)**
- **Bidirectional Switch**
- **Ambient Temperature Range, 0°C to 85°C**
- **ESD Protection**

TPS2045A, TPS2055A D PACKAGE (TOP VIEW)

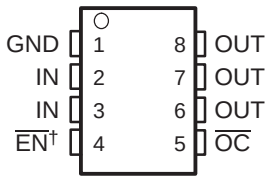

TPS2046A, TPS2056A D PACKAGE (TOP VIEW)

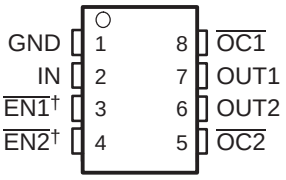

TPS2047A, TPS2057A D PACKAGE (TOP VIEW)

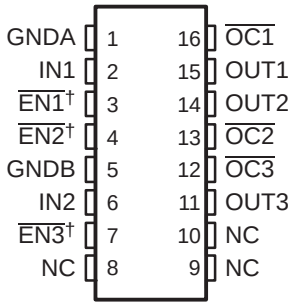

TPS2048A, TPS2058A D PACKAGE (TOP VIEW)

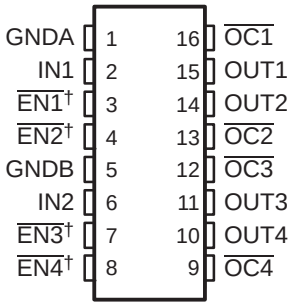

† All enable inputs are active high for the TPS205xA series.
NC – No connect

DESCRIPTION

The TPS2045A through TPS2048A and TPS2055A through TPS2058A power-distribution switches are intended for applications where heavy capacitive loads and short circuits are likely to be encountered.

These devices incorporate 80-mΩ N-channel MOSFET high-side power switches for power-distribution systems that require multiple power switches in a single package. Each switch is controlled by an independent logic enable input. Gate drive is provided by an internal charge pump designed to control the power-switch rise times and fall times to minimize current surges during switching. The charge pump requires no external components and allows operation from supplies as low as 2.7 V.

When the output load exceeds the current-limit threshold or a short is present, these devices limit the output current to a safe level by switching into a constant-current mode, pulling the overcurrent ($\overline{OCx}$) logic output low. When continuous heavy overloads and short circuits increase the power dissipation in the switch, causing the junction temperature to rise, a thermal protection circuit shuts off the switch to prevent damage. Recovery from a thermal shutdown is automatic once the device has cooled sufficiently. Internal circuitry ensures the switch remains off until valid input voltage is present. These power-distribution switches are designed to current limit at 0.5 A.

GENERAL SWITCH CATALOG

33 mΩ, Single	80 mΩ, Single	80 mΩ, Dual	80 mΩ, Dual	80 mΩ, Triple	80 mΩ, Quad	80 mΩ, Quad
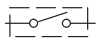	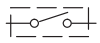	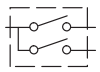	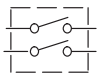	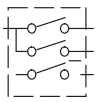	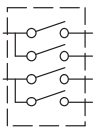	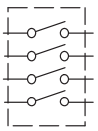
TPS201xA 0.2 A to 2 A	TPS2014 600 mA	TPS2042B 500 mA	TPS2080 500 mA	TPS2043B 500 mA	TPS2044B 500 mA	TPS2085 500 mA
TPS202x 0.2 A to 2 A	TPS2015 1 A	TPS2052B 500 mA	TPS2081 500 mA	TPS2053B 500 mA	TPS2054B 500 mA	TPS2086 500 mA
TPS203x 0.2 A to 2 A	TPS2041B 500 mA	TPS2046B 250 mA	TPS2082 500 mA	TPS2047B 250 mA	TPS2048A 250 mA	TPS2087 500 mA
	TPS2051B 500 mA	TPS2056 250 mA	TPS2090 250 mA	TPS2057A 250 mA	TPS2058 250 mA	TPS2095 250 mA
	TPS2045A 250 mA	TPS2062 1 A	TPS2091 250 mA	TPS2063 1 A		TPS2096 250 mA
	TPS2049 100 mA	TPS2066 1 A	TPS2092 250 mA	TPS2067 1 A		TPS2097 250 mA
	TPS2055A 250 mA	TPS2060 1.5 A				
	TPS2061 1 A	TPS2064 1.5 A				
	TPS2065 1 A					
	TPS2068 1.5 A					
	TPS2069 1.5 A					

Please be aware that an important notice concerning availability, standard warranty, and use in critical applications of Texas Instruments semiconductor products and disclaimers thereto appears at the end of this data sheet.

PRODUCTION DATA information is current as of publication date. Products conform to specifications per the terms of the Texas Instruments standard warranty. Production processing does not necessarily include testing of all parameters.

Copyright © 2000–2008, Texas Instruments Incorporated

These devices have limited built-in ESD protection. The leads should be shorted together or the device placed in conductive foam during storage or handling to prevent electrostatic damage to the MOS gates.

AVAILABLE OPTIONS[1]

T_A	ENABLE	RECOMMENDED MAXIMUM CONTINUOUS LOAD CURRENT (A)	TYPICAL SHORT-CIRCUIT CURRENT LIMIT AT 25°C (A)	NUMBER OF SWITCHES	PACKAGED DEVICES SOIC (D)[2]
0°C to 85°C	Active low	0.25	0.5	Single	TPS2045AD
	Active high				TPS2055AD
	Active low			Dual	TPS2046AD
	Active high				TPS2056AD
	Active low			Triple	TPS2047AD
	Active high				TPS2057AD
	Active low			Quad	TPS2048AD
	Active high				TPS2058AD

(1) For the most current package and ordering information, see the Package Option Addendum at the end of this document, or see the TI website at www.ti.com.
(2) The D package is available taped and reeled. Add an R suffix to device type (e.g., TPS2045ADR)

Copyright © 2000–2008, Texas Instruments Incorporated

FUNCTIONAL BLOCK DIAGRAMS

TPS2045A

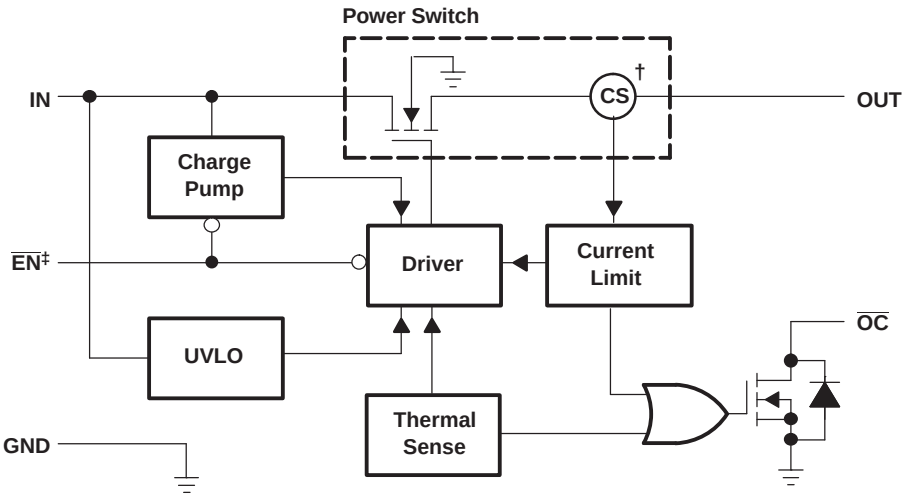

† Current sense
‡ Active high for TPS205xA series

TPS2046A

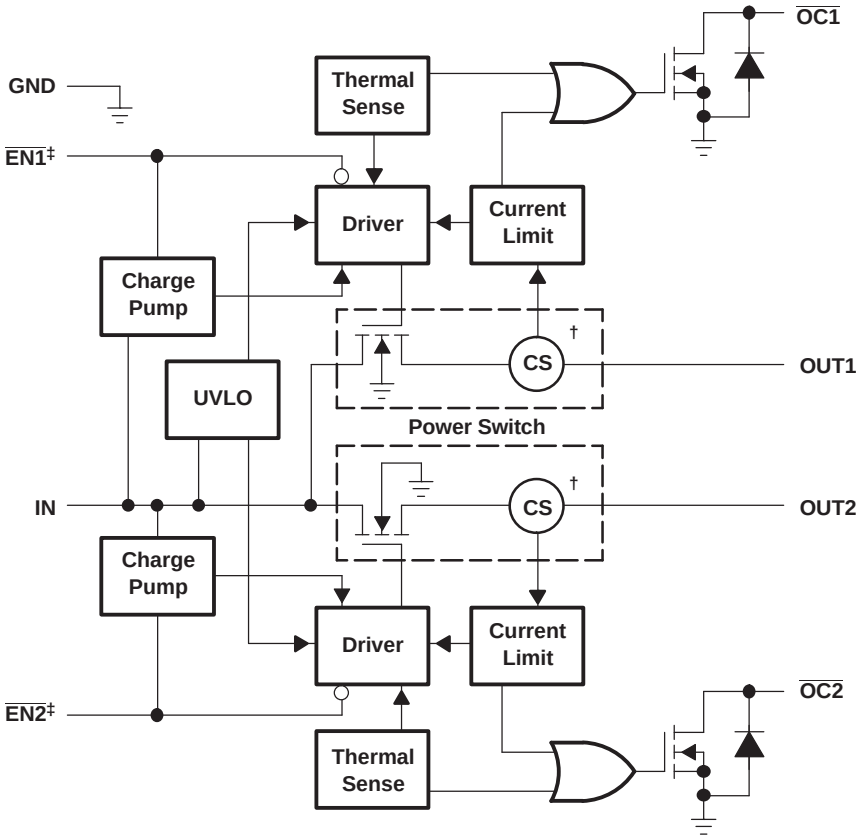

† Current sense
‡ Active high for TPS205xA series

TPS2047A

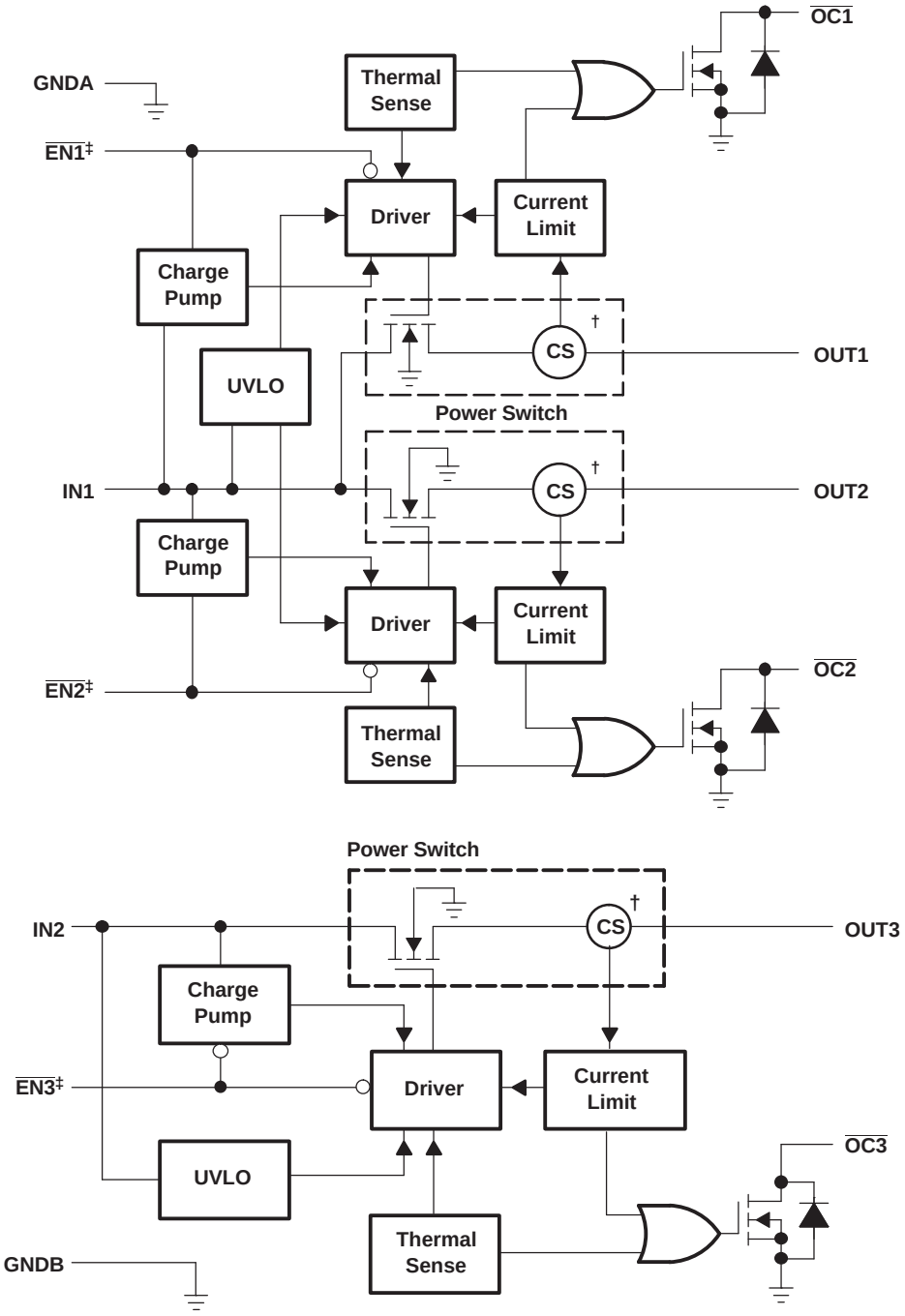

† Current sense
‡ Active high for TPS205xA series

Copyright © 2000–2008, Texas Instruments Incorporated

TPS2048A

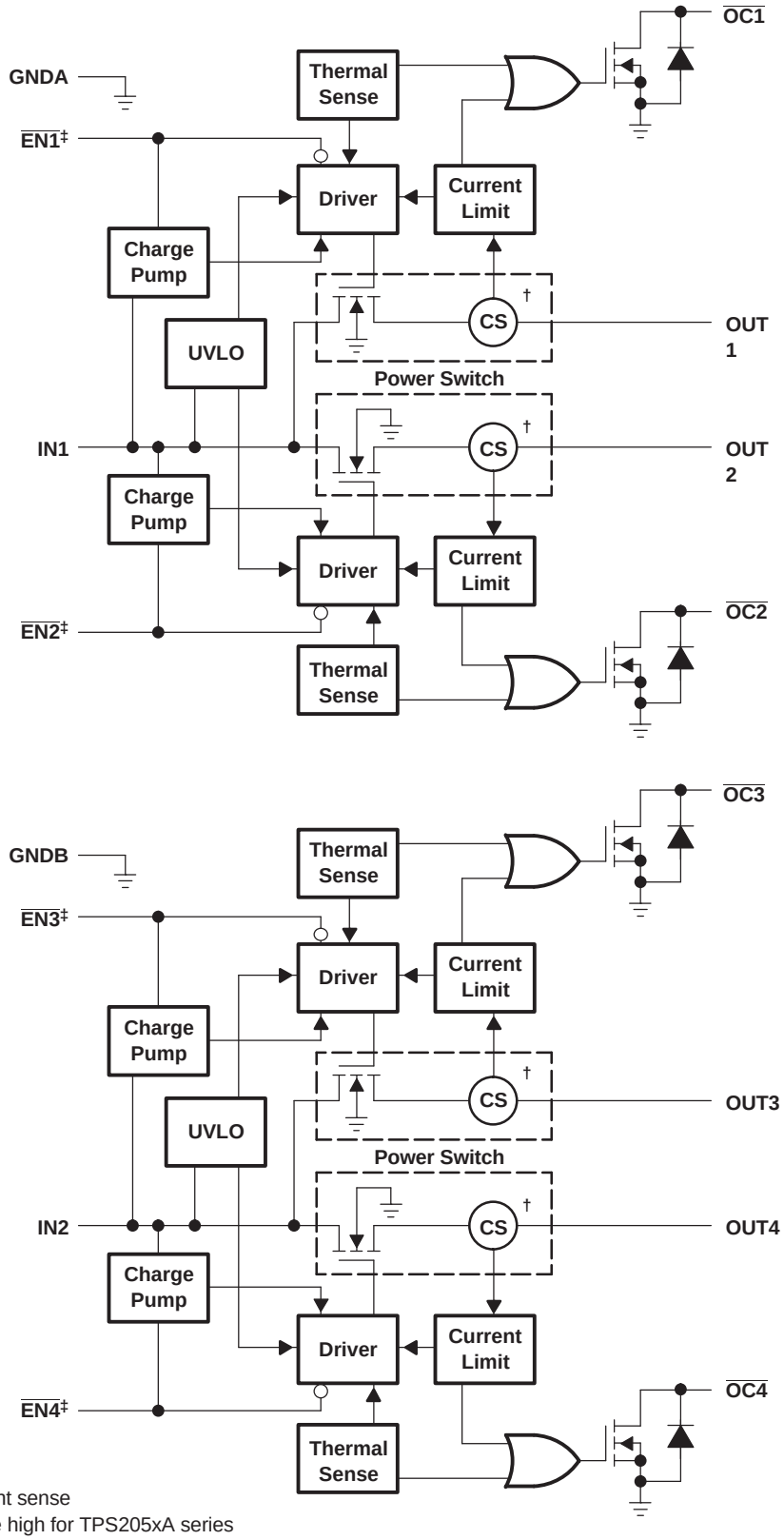

† Current sense
‡ Active high for TPS205xA series

Terminal Functions

TPS2045A AND TPS2055A				
TERMINAL			I/O	DESCRIPTION
NAME	NO.			
	TPS2045A	TPS2055A		
$\overline{EN}$	4	-	I	Enable input. Logic low turns on power switch.
EN	-	4	I	Enable input. Logic high turns on power switch.
GND	1	1	I	Ground
IN	2, 3	2, 3	I	Input voltage
$\overline{OC}$	5	5	O	Overcurrent. Open drain output active low
OUT	6, 7, 8	6, 7, 8	O	Power-switch output

TPS2046A AND TPS2056A				
TERMINAL			I/O	DESCRIPTION
NAME	NO.			
	TPS2046A	TPS2056A		
$\overline{EN1}$	3	-	I	Enable input. Logic low turns on power switch, IN-OUT1.
$\overline{EN2}$	4	-	I	Enable input. Logic low turns on power switch, IN-OUT2.
EN1	-	3	I	Enable input. Logic high turns on power switch, IN-OUT1.
EN2	-	4	I	Enable input. Logic high turns on power switch, IN-OUT2.
GND	1	1	I	Ground
IN	2	2	I	Input voltage
$\overline{OC1}$	8	8	O	Overcurrent. Open drain output active low, for power switch, IN-OUT1
$\overline{OC2}$	5	5	O	Overcurrent. Open drain output active low, for power switch, IN-OUT2
OUT1	7	7	O	Power-switch output
OUT2	6	6	O	Power-switch output

Copyright © 2000–2008, Texas Instruments Incorporated

Terminal Functions (continued)

TPS2047A AND TPS2057A				
TERMINAL			I/O	DESCRIPTION
NAME	NO.			
	TPS2047A	TPS2057A		
$\overline{EN1}$	3	-	I	Enable input, logic low turns on power switch, IN1-OUT1.
$\overline{EN2}$	4	-	I	Enable input, logic low turns on power switch, IN1-OUT2.
$\overline{EN3}$	7	-	I	Enable input, logic low turns on power switch, IN2-OUT3.
EN1	-	3	I	Enable input, logic high turns on power switch, IN1-OUT1.
EN2	-	4	I	Enable input, logic high turns on power switch, IN1-OUT2.
EN3	-	7	I	Enable input, logic high turns on power switch, IN2-OUT3.
GNDA	1	1		Ground for IN1 switch and circuitry.
GNDB	5	5		Ground for IN2 switch and circuitry.
IN1	2	2	I	Input voltage
IN2	6	6	I	Input voltage
NC	8, 9, 10	8, 9, 10		No connection
$\overline{OC1}$	16	16	O	Overcurrent, open drain output active low, IN1-OUT1
$\overline{OC2}$	13	13	O	Overcurrent, open drain output active low, IN1-OUT2
$\overline{OC3}$	12	12	O	Overcurrent, open drain output active low, IN2-OUT3
OUT1	15	15	O	Power-switch output, IN1-OUT1
OUT2	14	14	O	Power-switch output, IN1-OUT2
OUT3	11	11	O	Power-switch output, IN2-OUT3

TPS2048A AND TPS2058A				
TERMINAL			I/O	DESCRIPTION
NAME	NO.			
	TPS2048A	TPS2058A		
$\overline{EN1}$	3	-	I	Enable input. logic low turns on power switch, IN1-OUT1.
$\overline{EN2}$	4	-	I	Enable input. Logic low turns on power switch, IN1-OUT2.
$\overline{EN3}$	7	-	I	Enable input. Logic low turns on power switch, IN2-OUT3.
$\overline{EN4}$	8	-	I	Enable input. Logic low turns on power switch, IN2-OUT4.
EN1	-	3	I	Enable input. Logic high turns on power switch, IN1-OUT1.
EN2	-	4	I	Enable input. Logic high turns on power switch, IN1-OUT2.
EN3	-	7	I	Enable input. Logic high turns on power switch, IN2-OUT3.
EN4	-	8	I	Enable input. Logic high turns on power switch, IN2-OUT4.
GNDA	1	1		Ground for IN1 switch and circuitry.
GNDB	5	5		Ground for IN2 switch and circuitry.
IN1	2	2	I	Input voltage
IN2	6	6	I	Input voltage
$\overline{OC1}$	16	16	O	Overcurrent. Open drain output active low, IN1-OUT1
$\overline{OC2}$	13	13	O	Overcurrent. Open drain output active low, IN1-OUT2
$\overline{OC3}$	12	12	O	Overcurrent. Open drain output active low, IN2-OUT3
$\overline{OC4}$	9	9	O	Overcurrent. Open drain output active low, IN2-OUT4
OUT1	15	15	O	Power-switch output, IN1-OUT1
OUT2	14	14	O	Power-switch output, IN1-OUT2
OUT3	11	11	O	Power-switch output, IN2-OUT3
OUT4	10	10	O	Power-switch output, IN2-OUT4

Copyright © 2000–2008, Texas Instruments Incorporated

DETAILED DESCRIPTION

POWER SWITCH

The power switch is an N-channel MOSFET with a maximum on-state resistance of 135 mΩ ($V_{I(IN)}$ = 5 V). Configured as a high-side switch, the power switch prevents current flow from OUT to IN and IN to OUT when disabled. The power switch supplies a minimum of 250 mA per switch.

CHARGE PUMP

An internal charge pump supplies power to the driver circuit and provides the necessary voltage to pull the gate of the MOSFET above the source. The charge pump operates from input voltages as low as 2.7 V and requires very little supply current.

DRIVER

The driver controls the gate voltage of the power switch. To limit large current surges and reduce the associated electromagnetic interference (EMI) produced, the driver incorporates circuitry that controls the rise times and fall times of the output voltage. The rise and fall times are typically in the 2-ms to 4-ms range.

ENABLE ($\overline{\text{ENx}}$, ENx)

The logic enable disables the power switch and the bias for the charge pump, driver, and other circuitry to reduce the supply current. The supply current is reduced to less than 10 µA on the single and dual devices (20 µA on the triple and quad devices) when a logic high is present on $\overline{\text{ENx}}$ (TPS204xA [1]) or a logic low is present on ENx (TPS205xA[1]). A logic zero input on $\overline{\text{ENx}}$ or a logic high on ENx restores bias to the drive and control circuits and turns the power on. The enable input is compatible with both TTL and CMOS logic levels.

OVERCURRENT ($\overline{\text{OCx}}$)

The $\overline{\text{OCx}}$ open-drain output is asserted (active low) when an overcurrent or over temperature condition is encountered. The output will remain asserted until the overcurrent or over temperature condition is removed.

CURRENT SENSE

A sense FET monitors the current supplied to the load. The sense FET measures current more efficiently than conventional resistance methods. When an overload or short circuit is encountered, the current-sense circuitry sends a control signal to the driver. The driver in turn reduces the gate voltage and drives the power FET into its saturation region, which switches the output into a constant-current mode and holds the current constant while varying the voltage on the load.

THERMAL SENSE

The TPS204xA and TPS205xA implement a dual-threshold thermal trip to allow fully independent operation of the power distribution switches. In an overcurrent or short-circuit condition the junction temperature rises. When the die temperature rises to approximately 140°C, the internal thermal sense circuitry checks to determine which power switch is in an overcurrent condition and turns off that switch, thus isolating the fault without interrupting operation of the adjacent power switch. Hysteresis is built into the thermal sense, and after the device has cooled approximately 20 degrees, the switch turns back on. The switch continues to cycle off and on until the fault is removed. The ($\overline{\text{OCx}}$) open-drain output is asserted (active low) when over temperature or overcurrent occurs.

UNDERVOLTAGE LOCKOUT

A voltage sense circuit monitors the input voltage. When the input voltage is below approximately 2 V, a control signal turns off the power switch.

Copyright © 2000–2008, Texas Instruments Incorporated

ABSOLUTE MAXIMUM RATINGS

over operating free-air temperature range (unless otherwise noted)[1]

			UNIT
$V_{I(IN)}$	Input voltage range[2]		0.3 V to 6 V
$V_{O(OUT)}$	Output voltage range[2]		–0.3 V to $V_{I(IN)}$ + 0.3 V
$V_{I(\overline{ENx})}$ or $V_{I(ENx)}$	Input voltage range		–0.3 V to 6 V
$I_{O(OUT)}$	Continuous output current		internally limited
	Continuous total power dissipation		See Dissipation Rating Table
T_J	Operating virtual junction temperature range		0°C to 125°C
T_{stg}	Storage temperature range		–65°C to 150°C
	Lead temperature soldering 1,6 mm (1/16 inch) from case for 10 seconds		260°C
ESD	Electrostatic discharge protection	Human body model MIL-STD-883C	2 kV
		Machine model	0.2 kV

(1) Stresses beyond those listed under "absolute maximum ratings" may cause permanent damage to the device. These are stress ratings only, and functional operation of the device at these or any other conditions beyond those indicated under "recommended operating conditions" is not implied. Exposure to absolute-maximum-rated conditions for extended periods may affect device reliability.
(2) All voltages are with respect to GND.

DISSIPATION RATING TABLE

PACKAGE	T_A ≤ 25°C POWER RATING	DERATING FACTOR ABOVE T_A = 25°C	T_A = 70°C POWER RATING	T_A = 85°C POWER RATING
D-8	725 mW	5.9 mW/°C	464 mW	377 mW
D-16	1123 mW	9 mW/°C	719 mW	584 mW

RECOMMENDED OPERATING CONDITIONS

		MIN	MAX	UNIT
$V_{I(IN)}$	Input voltage	2.7	5.5	V
$V_{I(\overline{EN})}$ or $V_{I(EN)}$	Input voltage	0	5.5	V
$I_{O(OUT)}$	Continuous output current (per switch)	0	250	mA
T_J	Operating virtual junction temperature	0	125	°C

Copyright © 2000–2008, Texas Instruments Incorporated

ELECTRICAL CHARACTERISTICS OVER RECOMMENDED OPERATING JUNCTION TEMPERATURE RANGE

$V_{I(IN)}$ = 5.5 V, I_O = rated current, $V_{I(\overline{EN})}$ = $V_{I(IN)}$(unless otherwise noted)

PARAMETER		TEST CONDITIONS(1)		TPS204xA			TPS205xA			UNIT
				MIN	TYP	MAX	MIN	TYP	MAX	
$r_{DS(on)}$	Static drain-source on-state resistance, 5-V operation	$V_{I(IN)}$ = 5 V, I_O = 0.25 A	T_J = 25°C,		80	100		80	100	mΩ
		$V_{I(IN)}$ = 5 V, I_O = 0.25 A	T_J = 85°C,		90	120		90	120	
		$V_{I(IN)}$ = 5 V, I_O = 0.25 A	T_J = 125°C,		100	135		100	135	
	Static drain-source on-state resistance, 3.3-V operation	$V_{I(IN)}$ = 3.3 V, I_O = 0.25 A	T_J = 25°C,		90	125		90	125	
		$V_{I(IN)}$ = 3.3 V, I_O = 0.25 A	T_J = 85°C,		110	145		110	145	
		$V_{I(IN)}$ = 3.3 V, I_O = 0.25 A	T_J = 125°C,		120	160		120	160	
t_r	Rise time, output	$V_{I(IN)}$ = 5.5 V, C_L = 1 µF,	T_J = 25°C, R_L = 20Ω		2.5			2.5		ms
		$V_{I(IN)}$ = 2.7 V, C_L = 1 µF,	T_J = 25°C, R_L = 20Ω		3			3		
t_f	Fall time, output	$V_{I(IN)}$ = 5.5 V, C_L = 1 µF,	T_J = 25°C, R_L = 20Ω		4.4			4.4		ms
		$V_{I(IN)}$ = 2.7 V, C_L = 1 µF,	T_J = 25°°C, R_L = 20Ω		2.5			2.5		

(1) Pulse-testing techniques maintain junction temperature close to ambient temperature; thermal effects must be taken into account separately.

ENABLE INPUT $\overline{ENx}$ OR ENx

PARAMETER			TEST CONDITIONS	TPS204xA			TPS205xA			UNIT
				MIN	TYP	MAX	MIN	TYP	MAX	
V_{IH}	high-level input voltage		2.7 V ≤ $V_{I(IN)}$≤ 5.5 V	2			2			V
V_{IL}	Low-level input voltage		4.5 V ≤ $V_{I(IN)}$ ≤ 5.5 V			0.8			0.8	V
			2.7 V ≤ $V_{I(IN)}$ ≤ 4.5 V			0.4			0.4	
I_I	Input current	TPS204xA	$V_{I(\overline{ENx})}$ = 0 V or $V_{I(\overline{ENx})}$ = $V_{I(IN)}$	–0.5		0.5				µA
		TPS205xA	$V_{I(ENx)}$ = $V_{I(IN)}$ or $V_{I(ENx)}$ = 0 V				–0.5		0.5	
t_{on}	Turnon time		C_L = 100 µF, R_L = 20Ω			20			20	ms
t_{off}	Turnoff time		C_L = 100 µF, R_L = 20Ω			40			40	

CURRENT LIMIT

PARAMETER		TEST CONDITIONS(1)	TPS204xA			TPS205xA			UNIT
			MIN	TYP	MAX	MIN	TYP	MAX	
I_{OS}	Short-circuit output current	$V_{I(IN)}$ = 5 V, OUT connected to GND, Device enabled into short circuit	0.3	0.5	0.7	0.3	0.5	0.7	A

(1) Pulse-testing techniques maintain junction temperature close to ambient temperature; thermal effects must be taken into account separately.

Copyright © 2000–2008, Texas Instruments Incorporated

SUPPLY CURRENT (TPS2045A, TPS2055A)

PARAMETER	TEST CONDITIONS			TPS2045A			TPS2055A			UNIT
				MIN	TYP	MAX	MIN	TYP	MAX	
Supply current, low-level output	No Load on OUT	$V_{I(\overline{EN})} = V_{I(IN)}$	$T_J = 25°C$		0.025	1				µA
			$40°C \le T_J \le 125°C$			10				
		$V_{I(EN)} = 0$ V	$T_J = 25°C$					0.025	1	
			$40°C \le T_J \le 125°C$						10	
Supply current, high-level output	No Load on OUT	$V_{I(\overline{EN})} = 0$ V	$T_J = 25°C$		85	110				µA
			$40°C \le T_J \le 125°C$		100					
		$V_{I(EN)} = V_{I(IN)}$	$T_J = 25°C$					85	110	
			$40°C \le T_J \le 125°C$					100		
Leakage current	OUT connected to ground	$V_{I(\overline{EN})} = V_{I(IN)}$	$40°C \le T_J \le 125°C$		100					µA
		$V_{I(EN)} = 0$ V	$40°C \le T_J \le 125°C$					100		
Reverse leakage current	IN = High impedance	$V_{I(\overline{EN})} = 0$ V	$T_J = 25°C$		0.3					µA
		$V_{I(EN)} = V_{I(IN)}$						0.3		

SUPPLY CURRENT (TPS2046A, TPS2056A)

PARAMETER	TEST CONDITIONS			TPS2046A			TPS2056A			UNIT
				MIN	TYP	MAX	MIN	TYP	MAX	
Supply current, low-level output	No Load on OUT	$V_{I(\overline{ENx})} = V_{I(IN)}$	$T_J = 25°C$		0.025	1				µA
			$40°C \le T_J \le 125°C$			10				
		$V_{I(ENx)} = 0$ V	$T_J = 25°C$					0.025	1	
			$40°C \le T_J \le 125°C$						10	
Supply current, high-level output	No Load on OUT	$V_{I(\overline{ENx})} = 0$ V	$T_J = 25°C$		85	110				µA
			$40°C \le T_J \le 125°C$		100					
		$V_{I(ENx)} = V_{I(IN)}$	$T_J = 25°C$					85	110	
			$40°C \le T_J \le 125°C$					100		
Leakage current	OUT connected to ground	$V_{I(\overline{ENx})} = V_{I(IN)}$	$40°C \le T_J \le 125°C$		100					µA
		$V_{I(ENx)} = 0$ V	$40°C \le T_J \le 125°C$					100		
Reverse leakage current	IN = high impedance	$V_{I(\overline{EN})} = 0$ V	$T_J = 25°C$		0.3					µA
		$V_{I(EN)} = V_{I(IN)}$						0.3		

Copyright © 2000–2008, Texas Instruments Incorporated

SUPPLY CURRENT (TPS2047A, TPS2057A)

PARAMETER	TEST CONDITIONS			TPS2047A			TPS2057A			UNIT
				MIN	TYP	MAX	MIN	TYP	MAX	
Supply current, low-level output	No load on OUTx	$V_{I(\overline{ENx})} = V_{I(INx)}$	$T_J = 25°C$		0.05	2				µA
			$40°C \le T_J \le 125°C$			20				
		$V_{I(ENx)} = 0\ V$	$T_J = 25°C$					0.05	2	
			$40°C \le T_J \le 125°C$						20	
Supply current, high-level output	No load on OUTx	$V_{I(\overline{ENx})} = 0\ V$	$T_J = 25°C$		160	200				µA
			$40°C \le T_J \le 125°C$		200					
		$V_{I(ENx)} = V_{I(INx)}$	$T_J = 25°C$					160	200	
			$40°C \le T_J \le 125°C$					200		
Leakage current	OUTx connected to ground	$V_{I(\overline{ENx})} = V_{I(INx)}$	$40°C \le T_J \le 125°C$		200					µA
		$V_{I(ENx)} = 0\ V$	$40°C \le T_J \le 125°C$					200		
Reverse leakage current	IN = high impedance	$V_{I(\overline{ENx})} = 0\ V$	$T_J = 25°C$		0.3					µA
		$V_{I(ENx)} = V_{I(IN)}$						0.3		

SUPPLY CURRENT (TPS2048A, TPS2058A)

PARAMETER	TEST CONDITIONS			TPS2048A			TPS2058A			UNIT
				MIN	TYP	MAX	MIN	TYP	MAX	
Supply current, low-level output	No Load on OUTx	$V_{I(\overline{ENx})} = V_{I(INx)}$	$T_J = 25°C$		0.05	2				µA
			$40°C \le T_J \le 125°C$			20				
		$V_{I(ENx)} = 0\ V$	$T_J = 25°C$					0.05	2	
			$40°C \le T_J \le 125°C$						20	
Supply current, high-level output	No Load on OUTx	$V_{I(\overline{ENx})} = 0\ V$	$T_J = 25°C$		170	220				µA
			$40°C \le T_J \le 125°C$		200					
		$V_{I(ENx)} = V_{I(INx)}$	$T_J = 25°C$					170	220	
			$40°C \le T_J \le 125°C$					200		
Leakage current	OUTx connected to ground	$V_{I(\overline{ENx})} = V_{I(INx)}$	$40°C \le T_J \le 125°C$		200					µA
		$V_{I(ENx)} = 0\ V$	$40°C \le T_J \le 125°C$					200		
Reverse leakage current	IN = high impedance	$V_{I(\overline{EN})} = 0\ V$	$T_J = 25°C$		0.3					µA
		$V_{I(EN)} = V_{I(IN)}$						0.3		

UNDERVOLTAGE LOCKOUT

PARAMETER	TEST CONDITIONS	TPS204xA			TPS205xA			UNIT
		MIN	TYP	MAX	MIN	TYP	MAX	
Low-level input voltage		2		2.5	2		2.5	V
Hysteresis	$T_J = 25°C$		100			100		mV

OVERCURRENT $\overline{OC}$

PARAMETER	TEST CONDITIONS	TPS204xA			TPS205xA			UNIT
		MIN	TYP	MAX	MIN	TYP	MAX	
Sink current(1)	$V_O = 5\ V$			10			10	mA
Output low voltage	$I_O = 5\ V$, $V_{OL(\overline{OC})}$			0.5			0.5	V
Off-state current(1)	$V_O = 5\ V$, $V_O = 3.3\ V$			1			1	µA

(1) Specified by design, not production tested.

Copyright © 2000–2008, Texas Instruments Incorporated

PARAMETER MEASUREMENT INFORMATION

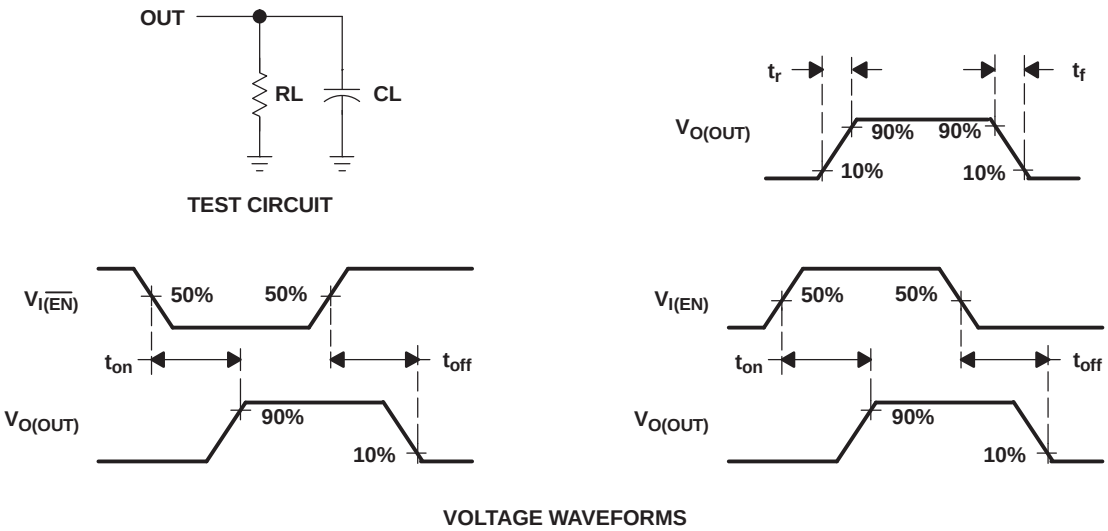

Figure 1. Test Circuit and Voltage Waveforms

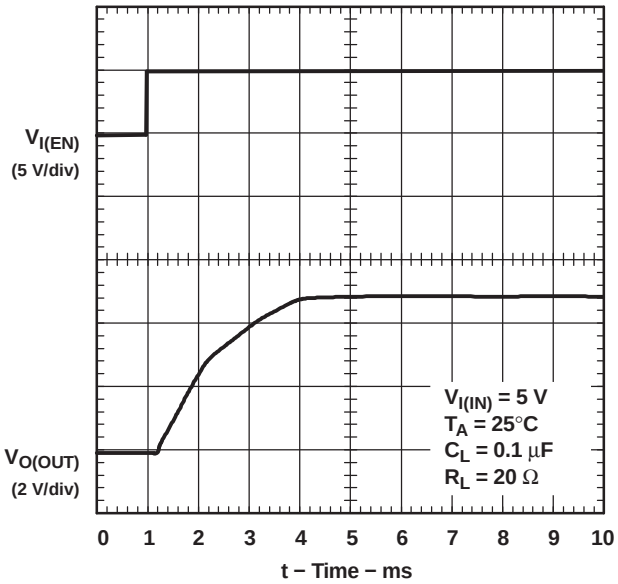

Figure 2. Turnon Delay and Rise Time With 0.1-µF Load

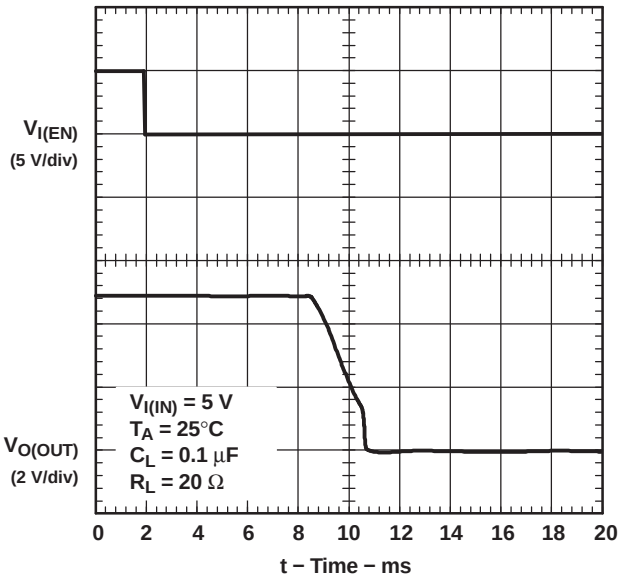

Figure 3. Turnoff Delay and Rise Time With 0.1-µF Load

Copyright © 2000–2008, Texas Instruments Incorporated

PARAMETER MEASUREMENT INFORMATION (continued)

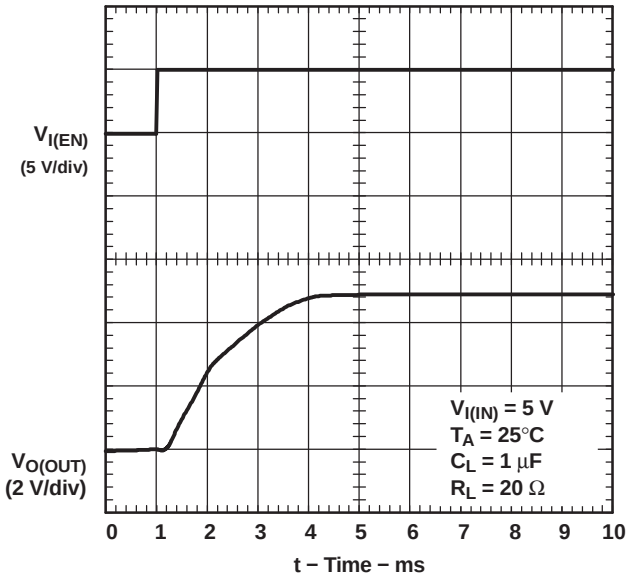

Figure 4. Turnon Delay and Rise Time With 1-µF Load

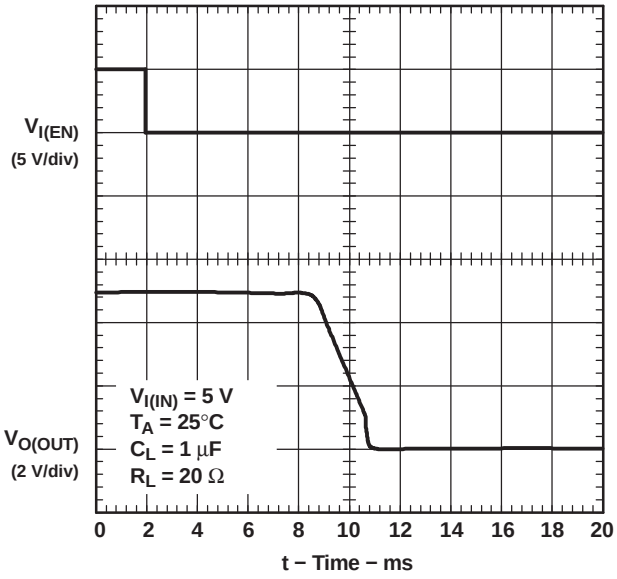

Figure 5. Turnoff Delay and Fall Time With 1-µF Load

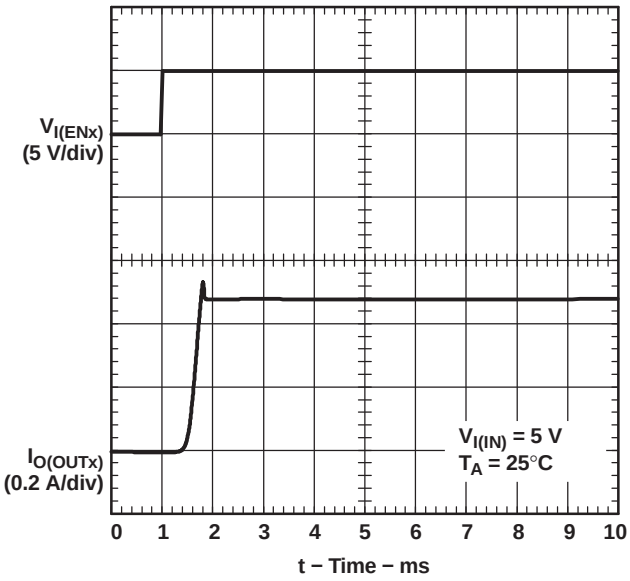

Figure 6. TPS2055A, Short-Circuit Current, Device Enabled Into Short

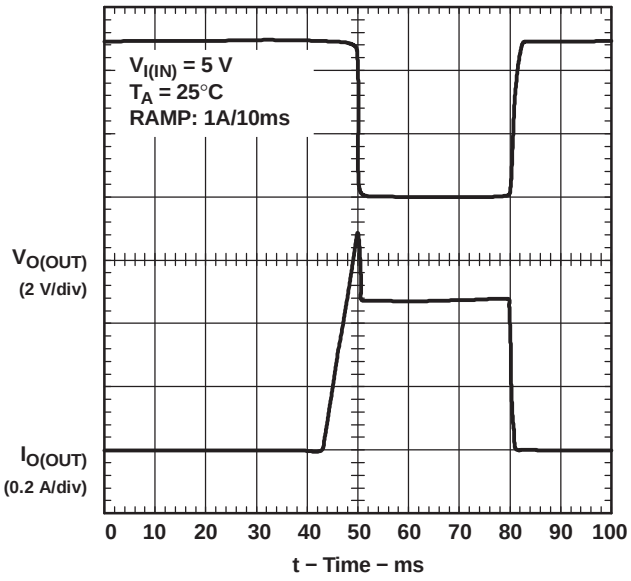

Figure 7. TPS2055A, Threshold Trip Current With Ramped Load on Enabled Device

Copyright © 2000–2008, Texas Instruments Incorporated

PARAMETER MEASUREMENT INFORMATION (continued)

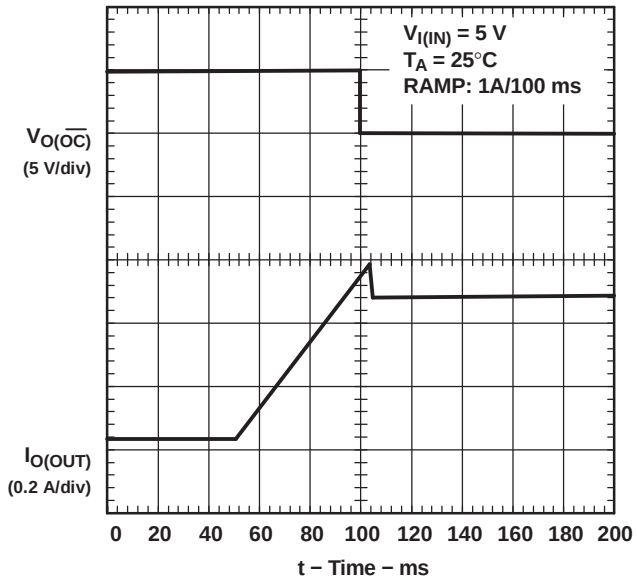

Figure 8. OC Response With Ramped Load on Enabled Device

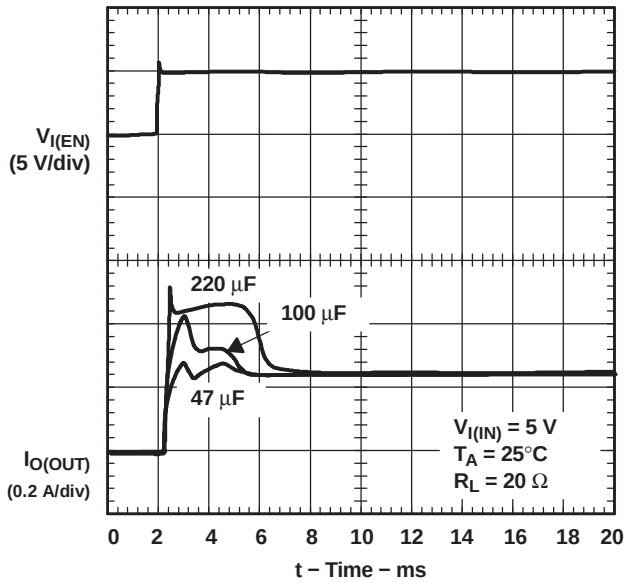

Figure 9. Inrush Current With 47-µF, 100-µF and 220-µF Load Capacitance

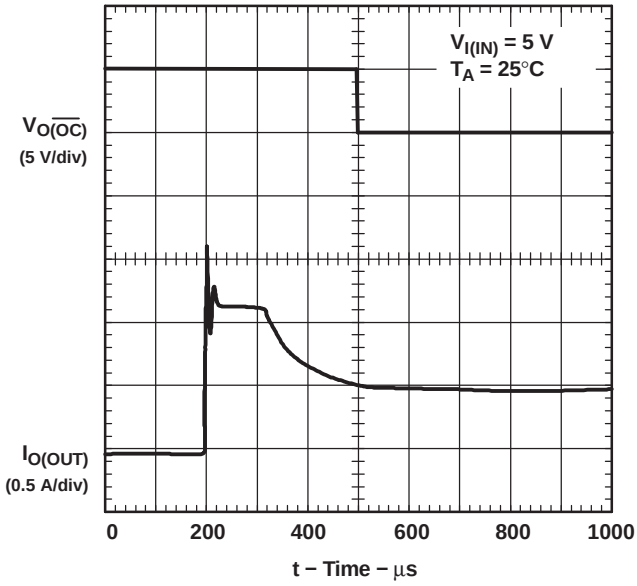

Figure 10. 4-Ω Load Connected to Enabled Device

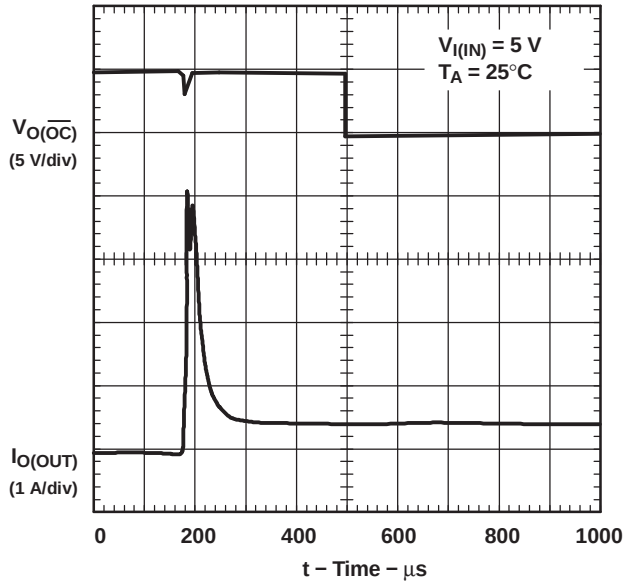

Figure 11. 1-Ω Load Connected to Enabled Device

Copyright © 2000–2008, Texas Instruments Incorporated

TYPICAL CHARACTERISTICS

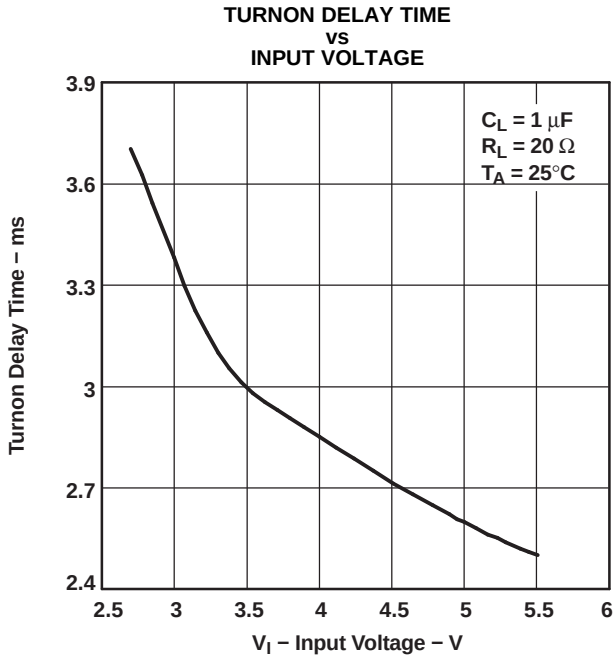

Figure 12.

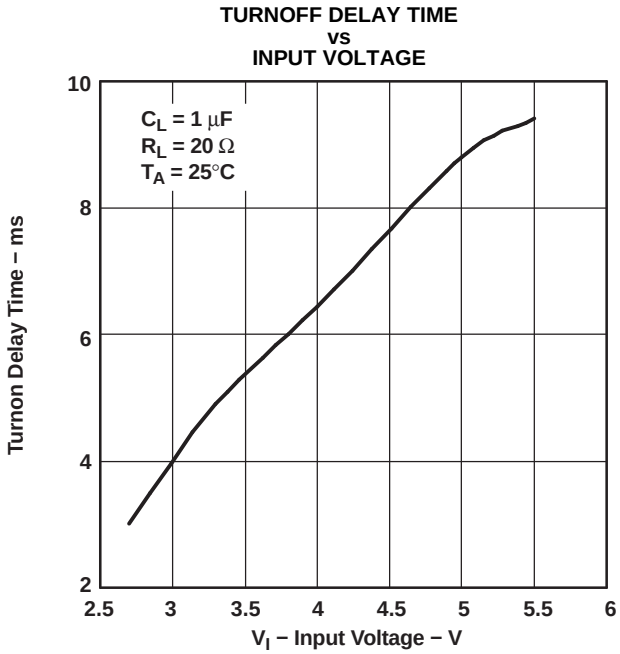

Figure 13.

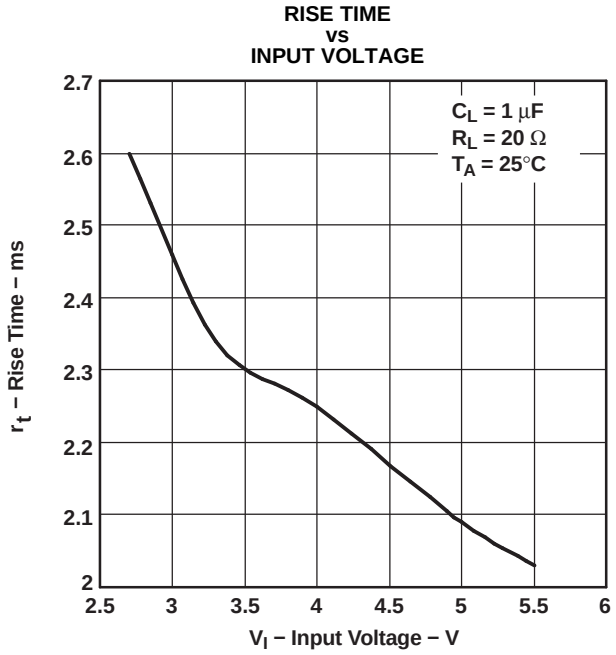

Figure 14.

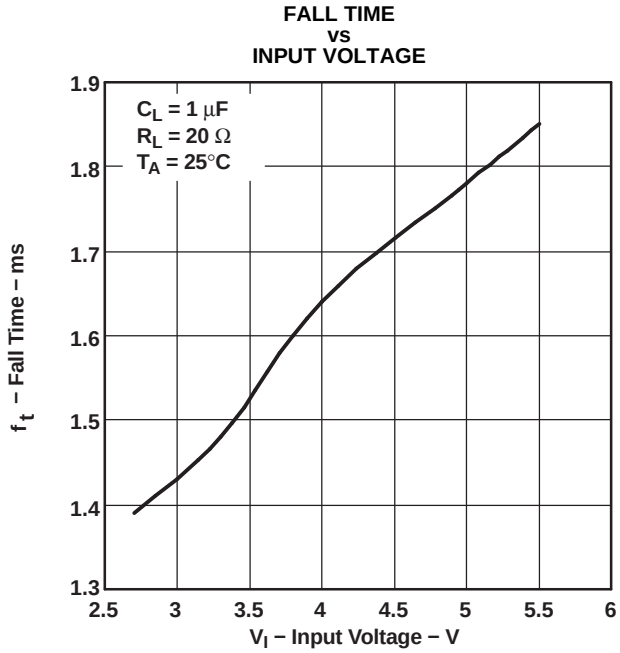

Figure 15.

Copyright © 2000–2008, Texas Instruments Incorporated

TYPICAL CHARACTERISTICS (continued)

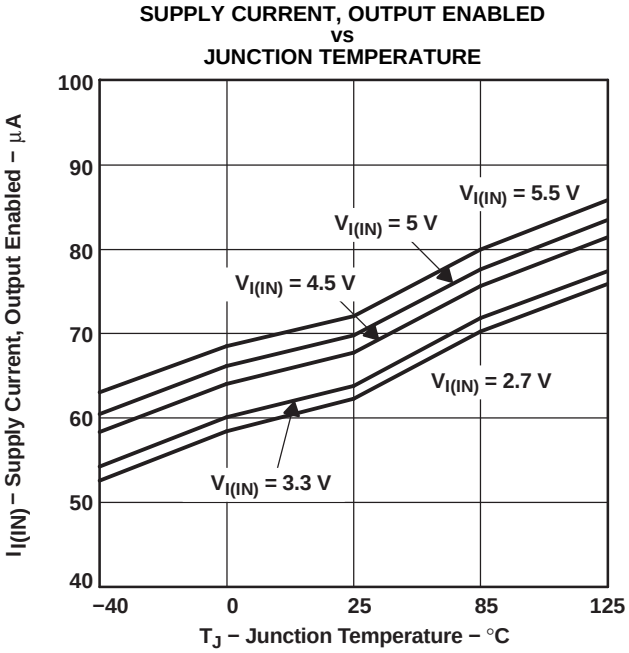

Figure 16.

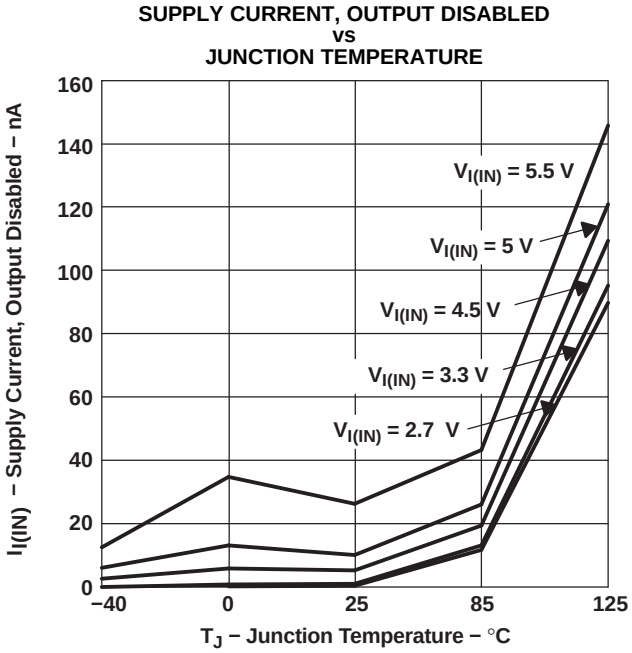

Figure 17.

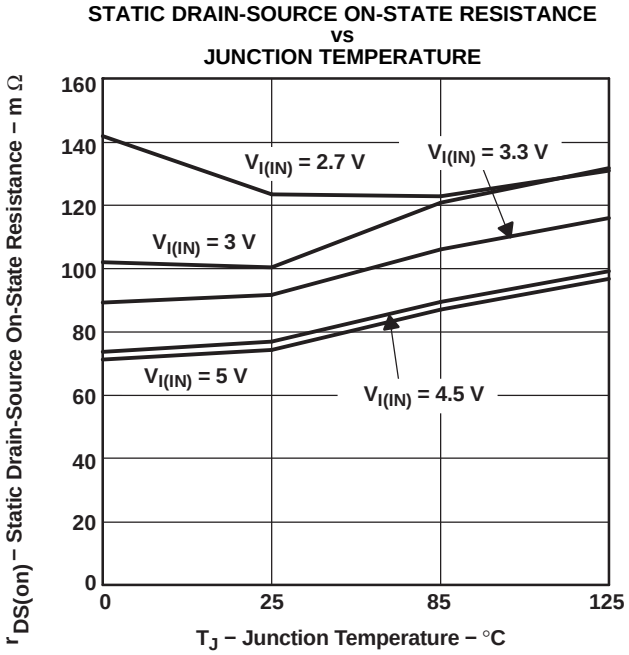

Figure 18.

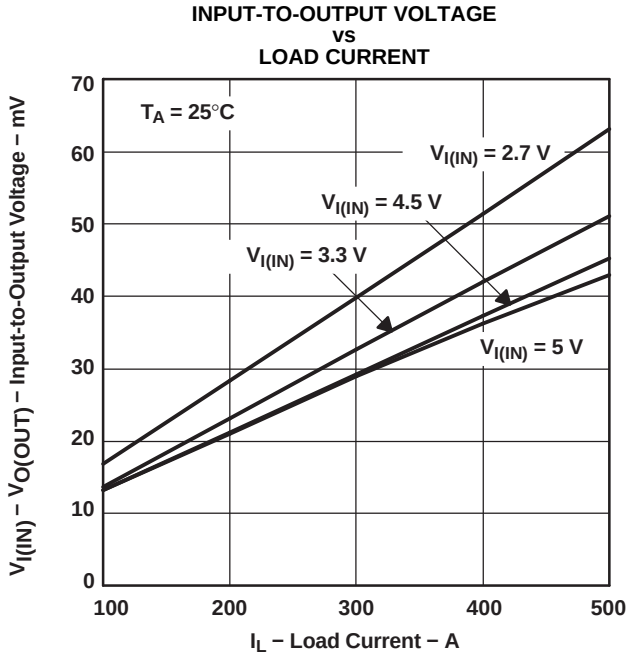

Figure 19.

TYPICAL CHARACTERISTICS (continued)

SHORT-CIRCUIT OUTPUT CURRENT vs JUNCTION TEMPERATURE

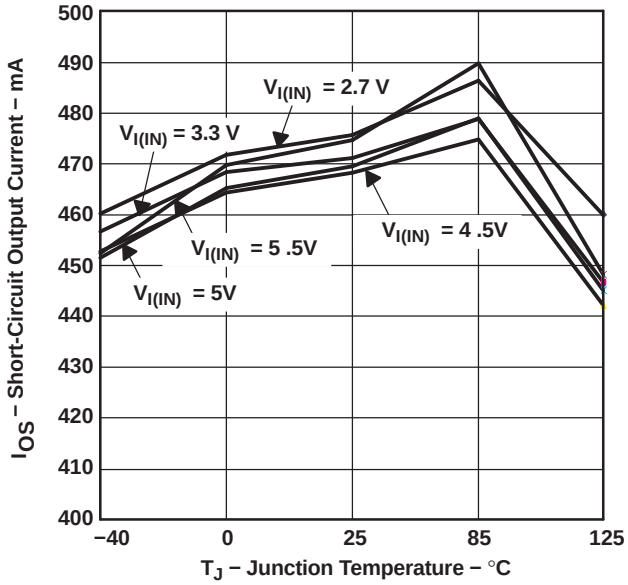

Figure 20.

THRESHOLD TRIP CURRENT vs INPUT VOLTAGE

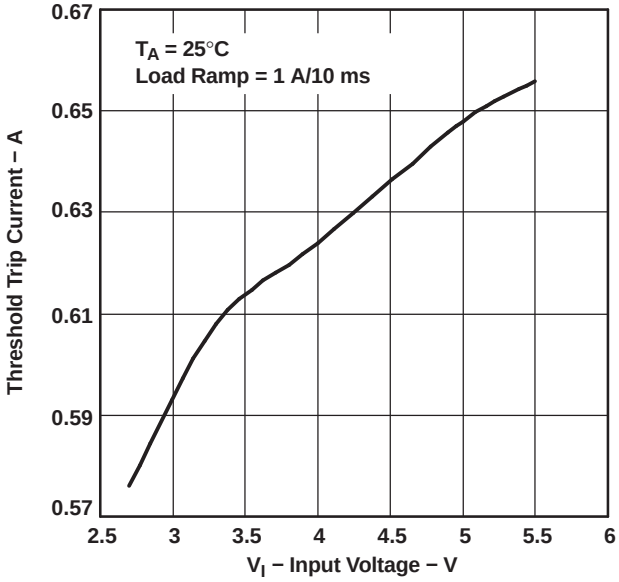

Figure 21.

UNDERVOLTAGE LOCKOUT vs JUNCTION TEMPERATURE

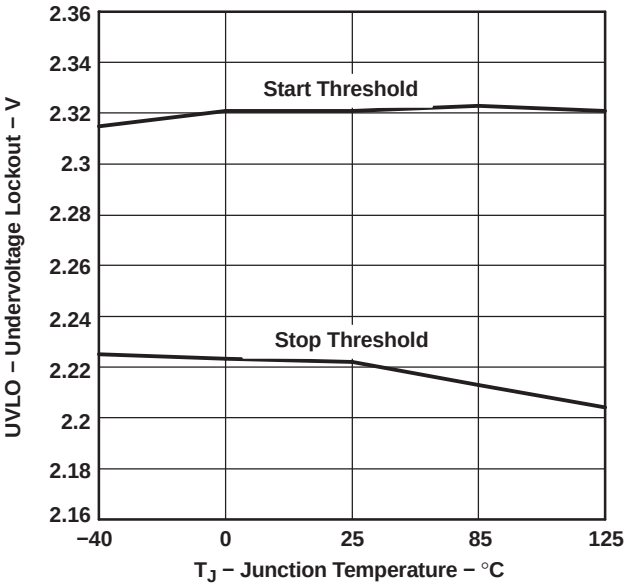

Figure 22.

CURRENT-LIMIT RESPONSE vs PEAK CURRENT

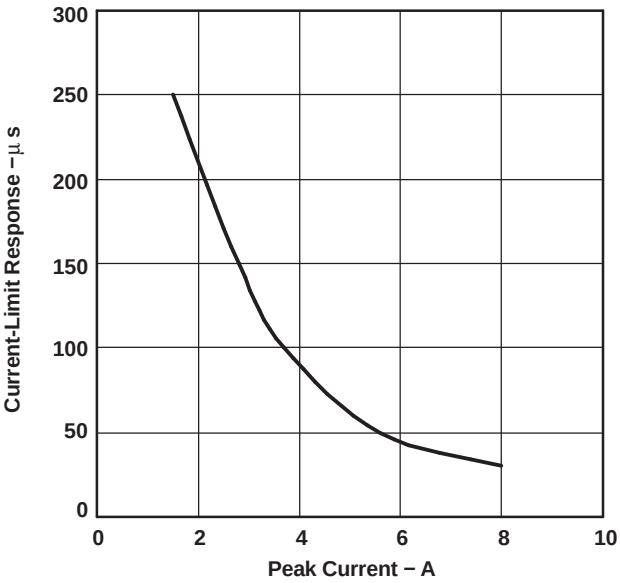

Figure 23.

Copyright © 2000–2008, Texas Instruments Incorporated

APPLICATION INFORMATION

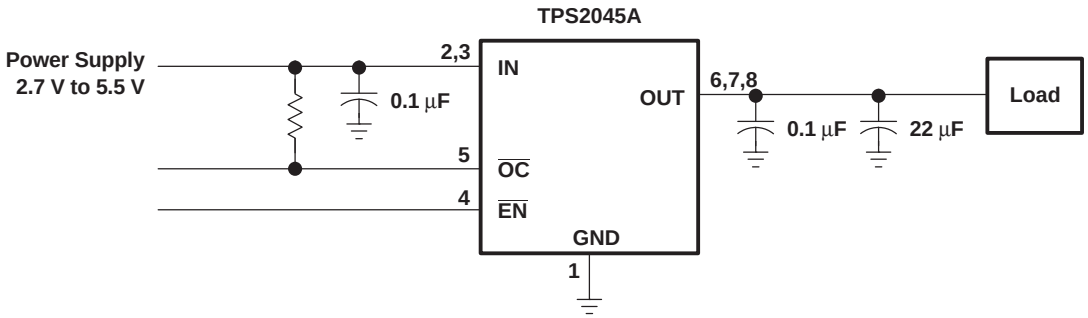

Figure 24. Typical Application (Example, TPS2045A)

POWER-SUPPLY CONSIDERATIONS

A 0.01-µF to 0.1-µF ceramic bypass capacitor between INx and GND, close to the device, is recommended. Placing a high-value electrolytic capacitor on the output pin(s) is recommended when the output load is heavy. This precaution reduces power-supply transients that may cause ringing on the input. Additionally, bypassing the output with a 0.01-µF to 0.1-µF ceramic capacitor improves the immunity of the device to short-circuit transients.

OVERCURRENT

A sense FET is employed to check for overcurrent conditions. Unlike current-sense resistors, sense FETs do not increase the series resistance of the current path. When an overcurrent condition is detected, the device maintains a constant output current and reduces the output voltage accordingly. Complete shutdown occurs only if the fault is present long enough to activate thermal limiting.

Three possible overload conditions can occur. In the first condition, the output has been shorted before the device is enabled or before $V_{I(IN)}$ has been applied (see Figure 6). The TPS204xA and TPS205xA sense the short and immediately switch into a constant-current output.

In the second condition, a short or an overload occurs while the device is enabled. At the instant the overload occurs, very high currents may flow for a short time before the current-limit circuit can react. After the current-limit circuit has tripped (reached the overcurrent trip threshold) the device switches into constant-current mode.

In the third condition, the load has been gradually increased beyond the recommended operating current. The current is permitted to rise until the current-limit threshold is reached or until the thermal limit of the device is exceeded (see Figure 7). The TPS204xA and TPS205xA are capable of delivering current up to the current-limit threshold without damaging the device. Once the threshold has been reached, the device switches into its constant-current mode.

$\overline{\text{OC}}$ RESPONSE

The $\overline{\text{OC}}$ open-drain output is asserted (active low) when an overcurrent or over temperature condition is encountered. The output will remain asserted until the overcurrent or over temperature condition is removed. Connecting a heavy capacitive load to an enabled device can cause momentary false overcurrent reporting from the inrush current flowing through the device, charging the downstream capacitor. The TPS204xA and TPS205xA family of devices are designed to reduce false overcurrent reporting. An internal overcurrent transient filter eliminates the need for external components to remove unwanted pulses. Using low-ESR electrolytic capacitors on the output lowers the inrush current flow through the device during hot-plug events by providing a low-impedance energy source, also reducing erroneous overcurrent reporting.

Copyright © 2000–2008, Texas Instruments Incorporated

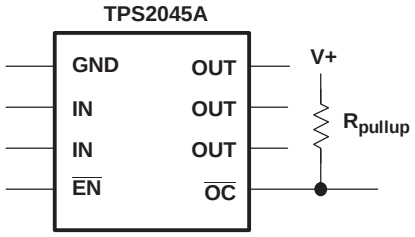

Figure 25. Typical Circuit for $\overline{OC}$ Pin (Example, TPS2045A)

POWER DISSIPATION AND JUNCTION TEMPERATURE

The low on-resistance on the n-channel MOSFET allows small surface-mount packages, such as SOIC, to pass large currents. The thermal resistance of these packages is high compared to those of power packages; it is good design practice to check power dissipation and junction temperature. Begin by determining the $r_{DS(on)}$ of the N-channel MOSFET relative to the input voltage and operating temperature. As an initial estimate, use the highest operating ambient temperature of interest and read $r_{DS(on)}$ from Figure 18. Using this value, the power dissipation per switch can be calculated by:

$$P_D = r_{DS(on)} \times I^2$$

Depending on which device is being used, multiply this number by the number of switches being used. This step will render the total power dissipation from the N-channel MOSFETs.

Finally, calculate the junction temperature:

$$T_J = P_D \times R_{\theta JA} + T_A$$

Where: T_A = Ambient temperature °C $R_{\Theta JA}$ = Thermal resistance SOIC = 172°C/W (for 8 pin), 111°C/W (for 16 pin) P_D = Total power dissipation based on number of switches being used.

Compare the calculated junction temperature with the initial estimate. If they do not agree within a few degrees, repeat the calculation, using the calculated value as the new estimate. Two or three iterations are generally sufficient to get a reasonable answer.

THERMAL PROTECTION

Thermal protection prevents damage to the IC when heavy-overload or short-circuit faults are present for extended periods of time. The faults force the TPS204xA and TPS205xA into constant-current mode, which causes the voltage across the high-side switch to increase; under short-circuit conditions, the voltage across the switch is equal to the input voltage. The increased dissipation causes the junction temperature to rise to high levels. The protection circuit senses the junction temperature of the switch and shuts it off. Hysteresis is built into the thermal sense circuit, and after the device has cooled approximately 20 degrees, the switch turns back on. The switch continues to cycle in this manner until the load fault or input power is removed.

The TPS204xA and TPS205xA implement a dual thermal trip to allow fully independent operation of the power distribution switches. In an overcurrent or short-circuit condition the junction temperature will rise. Once the die temperature rises to approximately 140°C, the internal thermal sense circuitry checks which power switch is in an overcurrent condition and turns that power switch off, thus isolating the fault without interrupting operation of the adjacent power switch. Should the die temperature exceed the first thermal trip point of 140°C and reach 160°C, both switches turn off. The $\overline{OC}$ open-drain output is asserted (active low) when overtemperature or overcurrent occurs.

UNDERVOLTAGE LOCKOUT (UVLO)

An undervoltage lockout ensures that the power switch is in the off state at power up. Whenever the input voltage falls below approximately 2 V, the power switch will be quickly turned off. This facilitates the design of hot-insertion systems where it is not possible to turn off the power switch before input power is removed. The UVLO will also keep the switch from being turned on until the power supply has reached at least 2 V, even if the switch is enabled. Upon reinsertion, the power switch will be turned on, with a controlled rise time to reduce EMI and voltage overshoots.

Copyright © 2000–2008, Texas Instruments Incorporated

UNIVERSAL SERIAL BUS (USB) APPLICATIONS

The universal serial bus (USB) interface is a 12-Mb/s, or 1.5-Mb/s, multiplexed serial bus designed for low-to-medium bandwidth PC peripherals (e.g., keyboards, printers, scanners, and mice). The four-wire USB interface is conceived for dynamic attach-detach (hot plug-unplug) of peripherals. Two lines are provided for differential data, and two lines are provided for 5-V power distribution.

USB data is a 3.3-V level signal, but power is distributed at 5 V to allow for voltage drops in cases where power is distributed through more than one hub across long cables. Each function must provide its own regulated 3.3 V from the 5-V input or its own internal power supply.

The USB specification defines the following five classes of devices, each differentiated by power-consumption requirements:

- Hosts/self-powered hubs (SPH)
- Bus-powered hubs (BPH)
- Low-power, bus-powered functions
- High-power, bus-powered functions
- Self-powered functions

Self-powered and bus-powered hubs distribute data and power to downstream functions. The TPS204xA and TPS205xA can provide power-distribution solutions for many of these classes of devices.

HOST/SELF-POWERED AND BUS-POWERED HUBS

Hosts and self-powered hubs have a local power supply that powers the embedded functions and the downstream ports. This power supply must provide from 5.25 V to 4.75 V to the board side of the downstream connection under full-load and no-load conditions. Hosts and SPHs are required to have current-limit protection and must report overcurrent conditions to the USB controller. Typical SPHs are desktop PCs, monitors, printers, and stand-alone hubs.

Bus-powered hubs obtain all power from upstream ports and often contain an embedded function. The hubs are required to power up with less than one unit load. The BPH usually has one embedded function, and power is always available to the controller of the hub. If the embedded function and hub require more than 100 mA on power up, the power to the embedded function may need to be kept off until enumeration is completed. This can be accomplished by removing power or by shutting off the clock to the embedded function. Power switching the embedded function is not necessary if the aggregate power draw for the function and controller is less than one unit load. The total current drawn by the bus-powered device is the sum of the current to the controller, the embedded function, and the downstream ports, and it is limited to 500 mA from an upstream port.

LOW-POWER BUS-POWERED FUNCTIONS AND HIGH-POWER BUS-POWERED FUNCTIONS

Both low-power and high-power bus-powered functions obtain all power from upstream ports; low-power functions always draw less than 100 mA (see Figure 26); high-power functions must draw less than 100 mA at power up and can draw up to 500 mA after enumeration. If the load of the function is more than the parallel combination of 44 Ω and 10 μF at power up, the device must implement inrush current limiting.

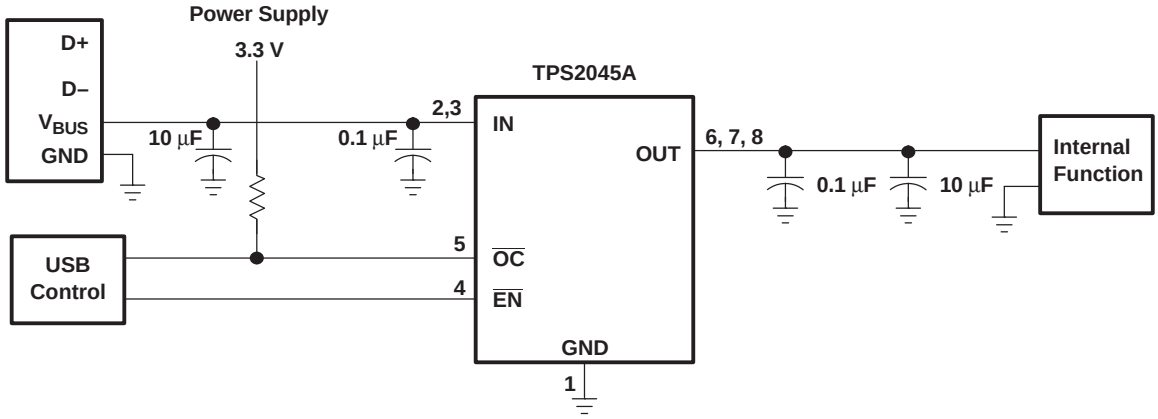

Figure 26. Low-Power Bus-Powered Function (Example, TPS2045A)

USB POWER-DISTRIBUTION REQUIREMENTS

USB can be implemented in several ways, and, regardless of the type of USB device being developed, several power-distribution features must be implemented.

- Hosts/self-powered hubs must:
  - Current-limit downstream ports
  - Report overcurrent conditions on USB V_{BUS}
  - Enable/disable power to downstream ports
  - Power up at <100 mA
  - Limit inrush current (<44 Ω and 10 μF)
  - Limit inrush currents
  - Power up at <100 mA
- Bus-powered hubs must:
  - Enable/disable power to downstream ports
  - Power up at <100 mA
  - Limit inrush current (<44 Ω and 10 μF)
  - Limit inrush currents
  - Power up at <100 mA
- Functions must:
  - Limit inrush currents
  - Power up at <100 mA

The feature set of the TPS204xA and TPS205xA allows them to meet each of these requirements. The integrated current-limiting and overcurrent reporting is required by hosts and self-powered hubs. The logic-level enable and controlled rise times meet the need of both input and output ports on bus-power hubs, as well as the input ports for bus-power functions.

Copyright © 2000–2008, Texas Instruments Incorporated

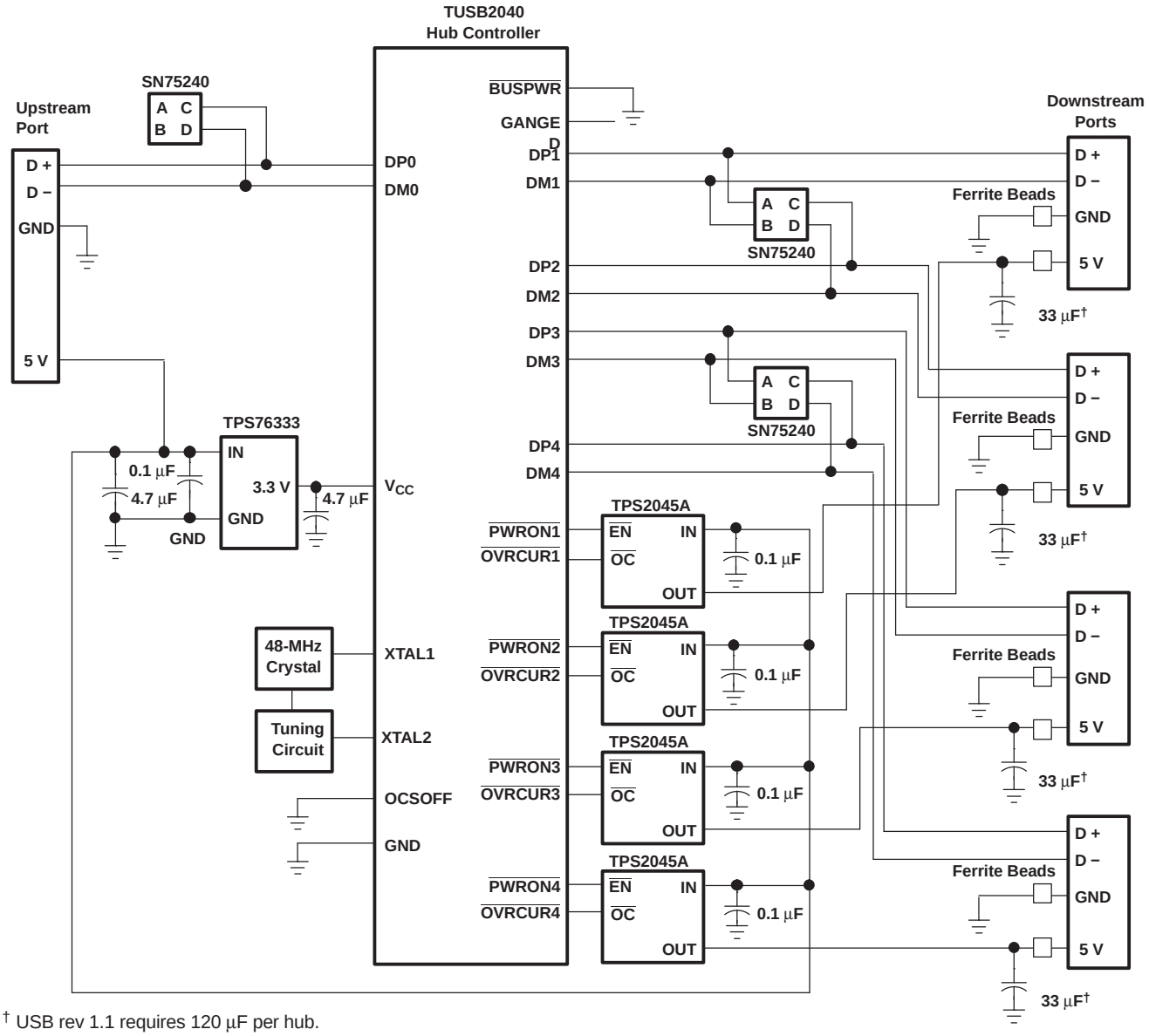

† USB rev 1.1 requires 120 µF per hub.

Figure 27. Bus-Powered Hub Implementation, TPS2045A

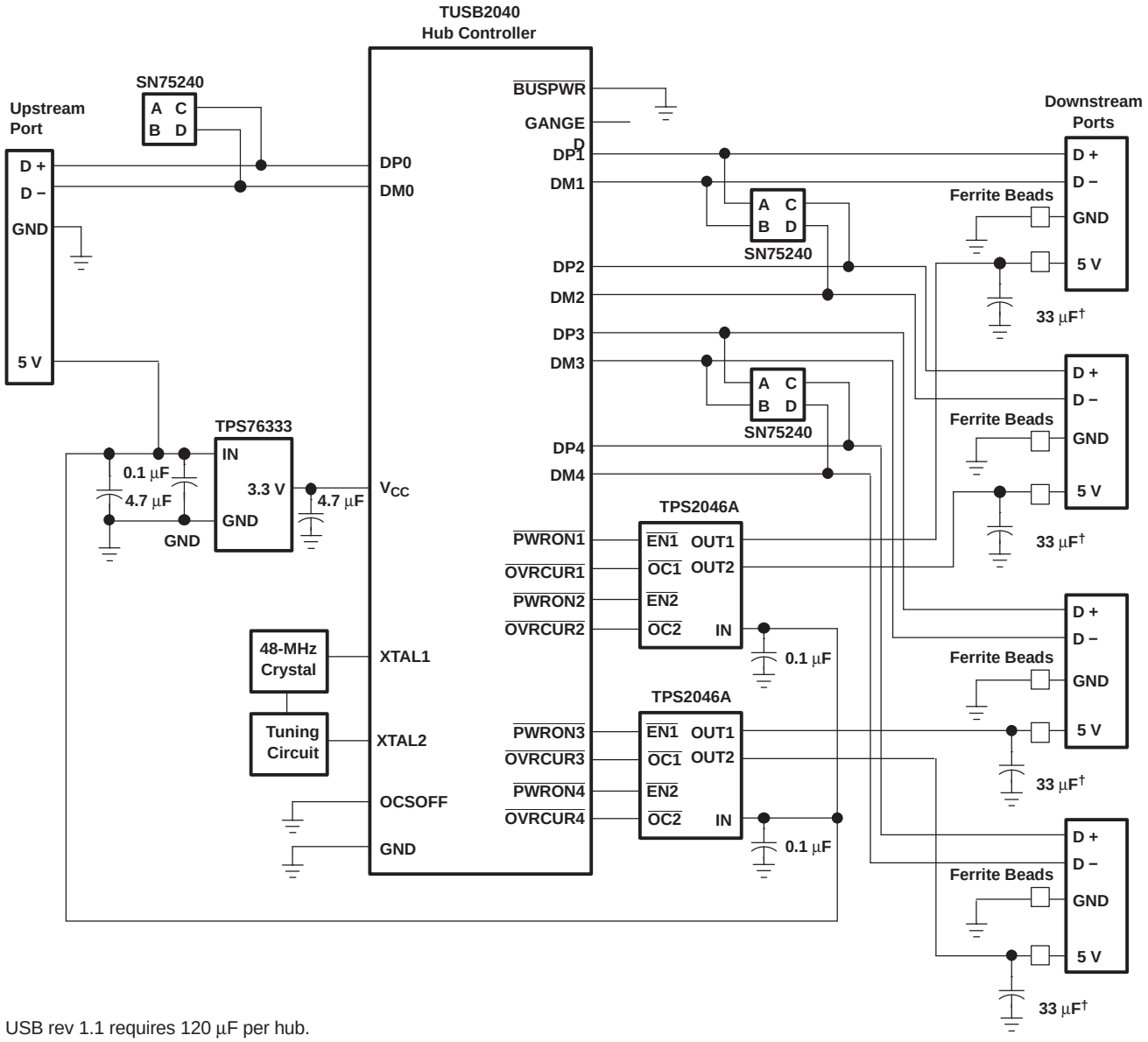

† USB rev 1.1 requires 120 µF per hub.

Figure 28. Bus-Powered Hub Implementation, TPS2046A

Copyright © 2000–2008, Texas Instruments Incorporated

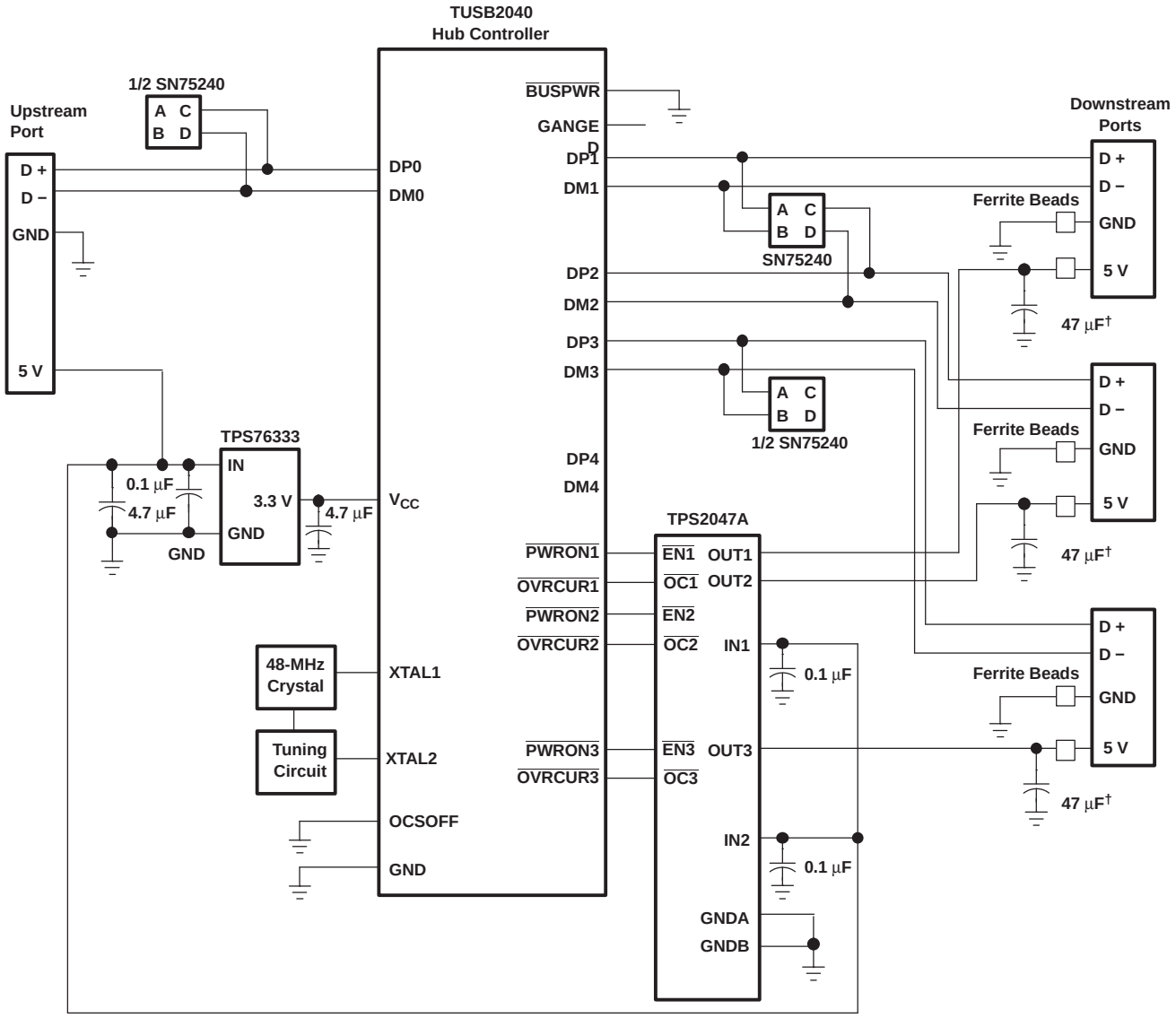

† USB rev 1.1 requires 120 µF per hub.

Figure 29. Bus-Powered Hub Implementation, TPS2047A

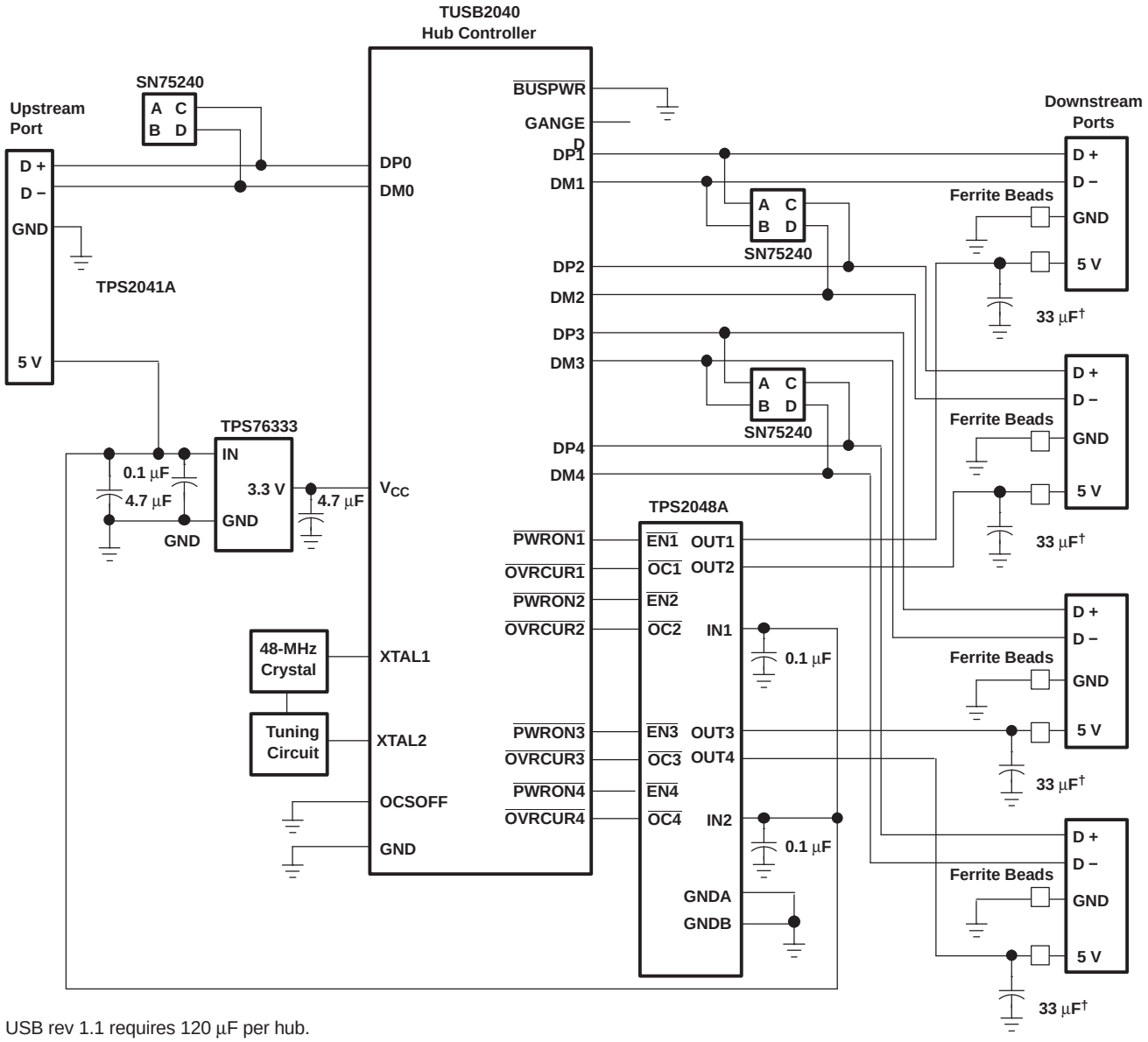

Figure 30. Bus-Powered Hub Implementation, TPS2048A

Copyright © 2000–2008, Texas Instruments Incorporated

GENERIC HOT-PLUG APPLICATIONS (see Figure 31)

In many applications it may be necessary to remove modules or pc boards while the main unit is still operating. These are considered hot-plug applications. Such implementations require the control of current surges seen by the main power supply and the card being inserted. The most effective way to control these surges is to limit and slowly ramp the current and voltage being applied to the card, similar to the way in which a power supply normally turns on. Due to the controlled rise times and fall times of the TPS204xA and TPS205xA, these devices can be used to provide a softer start-up to devices being hot-plugged into a powered system. The UVLO feature of the TPS204xA and TPS205xA also ensures the switch will be off after the card has been removed, and the switch will be off during the next insertion. The UVLO feature insures a soft start with a controlled rise time for every insertion of the card or module.

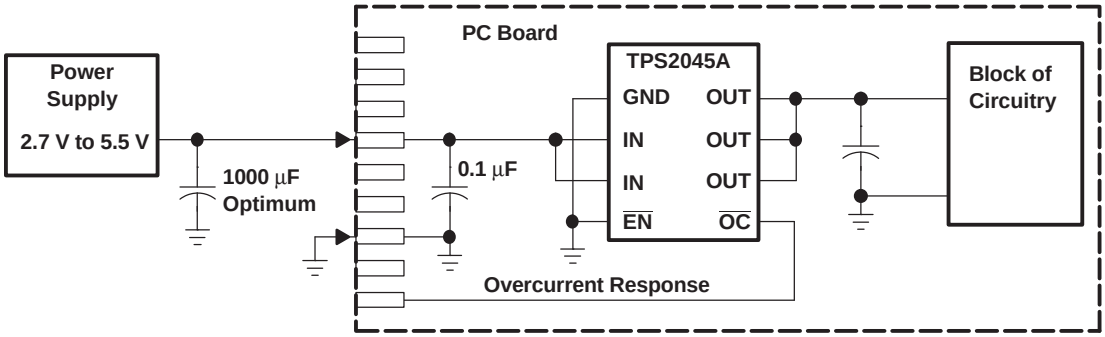

Figure 31. Typical Hot-Plug Implementation (Example, TPS2045A)

By placing the TPS204xA and TPS205xA between the V_{CC} input and the rest of the circuitry, the input power will reach these devices first after insertion. The typical rise time of the switch is approximately 2.5 ms, providing a slow voltage ramp at the output of the device. This implementation controls system surge currents and provides a hot-plugging mechanism for any device.

Copyright © 2000–2008, Texas Instruments Incorporated

PACKAGING INFORMATION

Orderable Device	Status (1)	Package Type	Package Drawing	Pins	Package Qty	Eco Plan (2)	Lead finish/ Ball material (6)	MSL Peak Temp (3)	Op Temp (°C)	Device Marking (4/5)	Samples
TPS2045AD	ACTIVE	SOIC	D	8	75	RoHS & Green	NIPDAU	Level-1-260C-UNLIM	0 to 125	2045A	Samples
TPS2045ADR	ACTIVE	SOIC	D	8	2500	RoHS & Green	NIPDAU	Level-1-260C-UNLIM	0 to 125	2045A	Samples
TPS2045ADRG4	ACTIVE	SOIC	D	8	2500	RoHS & Green	NIPDAU	Level-1-260C-UNLIM	0 to 125	2045A	Samples
TPS2046AD	ACTIVE	SOIC	D	8	75	RoHS & Green	NIPDAU	Level-1-260C-UNLIM	0 to 125	2046A	Samples
TPS2048AD	ACTIVE	SOIC	D	16	40	RoHS & Green	NIPDAU	Level-1-260C-UNLIM	0 to 125	2048A	Samples
TPS2048ADR	ACTIVE	SOIC	D	16	2500	RoHS & Green	NIPDAU	Level-1-260C-UNLIM	0 to 125	2048A	Samples
TPS2048ADRG4	ACTIVE	SOIC	D	16	2500	RoHS & Green	NIPDAU	Level-1-260C-UNLIM	0 to 125	2048A	Samples
TPS2055AD	ACTIVE	SOIC	D	8	75	RoHS & Green	NIPDAU	Level-1-260C-UNLIM	0 to 125	2055A	Samples
TPS2055ADR	ACTIVE	SOIC	D	8	2500	RoHS & Green	NIPDAU	Level-1-260C-UNLIM	0 to 125	2055A	Samples
TPS2055ADRG4	ACTIVE	SOIC	D	8	2500	RoHS & Green	NIPDAU	Level-1-260C-UNLIM	0 to 125	2055A	Samples
TPS2056AD	ACTIVE	SOIC	D	8	75	RoHS & Green	NIPDAU	Level-1-260C-UNLIM	0 to 125	2056A	Samples
TPS2056ADG4	ACTIVE	SOIC	D	8	75	RoHS & Green	NIPDAU	Level-1-260C-UNLIM	0 to 125	2056A	Samples
TPS2056ADR	ACTIVE	SOIC	D	8	2500	RoHS & Green	NIPDAU	Level-1-260C-UNLIM	0 to 125	2056A	Samples
TPS2056ADRG4	ACTIVE	SOIC	D	8	2500	RoHS & Green	NIPDAU	Level-1-260C-UNLIM	0 to 125	2056A	Samples
TPS2057AD	ACTIVE	SOIC	D	16	40	RoHS & Green	NIPDAU	Level-1-260C-UNLIM	0 to 125	2057A	Samples
TPS2057ADG4	ACTIVE	SOIC	D	16	40	RoHS & Green	NIPDAU	Level-1-260C-UNLIM	0 to 125	2057A	Samples
TPS2057ADR	ACTIVE	SOIC	D	16	2500	RoHS & Green	NIPDAU	Level-1-260C-UNLIM	0 to 125	2057A	Samples
TPS2058AD	ACTIVE	SOIC	D	16	40	RoHS & Green	NIPDAU	Level-1-260C-UNLIM	0 to 125	2058A	Samples

(1) The marketing status values are defined as follows:
ACTIVE: Product device recommended for new designs.
LIFEBUY: TI has announced that the device will be discontinued, and a lifetime-buy period is in effect.

NRND: Not recommended for new designs. Device is in production to support existing customers, but TI does not recommend using this part in a new design.
PREVIEW: Device has been announced but is not in production. Samples may or may not be available.
OBSOLETE: TI has discontinued the production of the device.

(2) **RoHS:** TI defines "RoHS" to mean semiconductor products that are compliant with the current EU RoHS requirements for all 10 RoHS substances, including the requirement that RoHS substance do not exceed 0.1% by weight in homogeneous materials. Where designed to be soldered at high temperatures, "RoHS" products are suitable for use in specified lead-free processes. TI may reference these types of products as "Pb-Free".
RoHS Exempt: TI defines "RoHS Exempt" to mean products that contain lead but are compliant with EU RoHS pursuant to a specific EU RoHS exemption.
Green: TI defines "Green" to mean the content of Chlorine (Cl) and Bromine (Br) based flame retardants meet JS709B low halogen requirements of <=1000ppm threshold. Antimony trioxide based flame retardants must also meet the <=1000ppm threshold requirement.

(3) MSL, Peak Temp. - The Moisture Sensitivity Level rating according to the JEDEC industry standard classifications, and peak solder temperature.

(4) There may be additional marking, which relates to the logo, the lot trace code information, or the environmental category on the device.

(5) Multiple Device Markings will be inside parentheses. Only one Device Marking contained in parentheses and separated by a "~" will appear on a device. If a line is indented then it is a continuation of the previous line and the two combined represent the entire Device Marking for that device.

(6) Lead finish/Ball material - Orderable Devices may have multiple material finish options. Finish options are separated by a vertical ruled line. Lead finish/Ball material values may wrap to two lines if the finish value exceeds the maximum column width.

Important Information and Disclaimer: The information provided on this page represents TI's knowledge and belief as of the date that it is provided. TI bases its knowledge and belief on information provided by third parties, and makes no representation or warranty as to the accuracy of such information. Efforts are underway to better integrate information from third parties. TI has taken and continues to take reasonable steps to provide representative and accurate information but may not have conducted destructive testing or chemical analysis on incoming materials and chemicals. TI and TI suppliers consider certain information to be proprietary, and thus CAS numbers and other limited information may not be available for release.

In no event shall TI's liability arising out of such information exceed the total purchase price of the TI part(s) at issue in this document sold by TI to Customer on an annual basis.

TAPE AND REEL INFORMATION

REEL DIMENSIONS

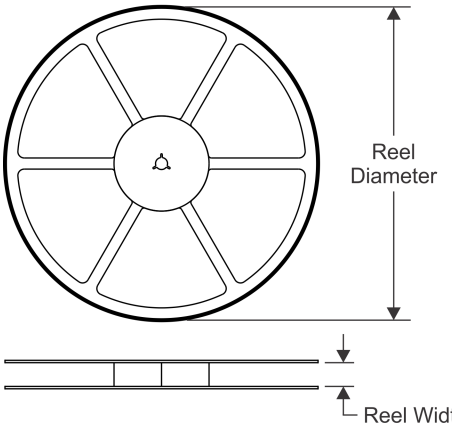

TAPE DIMENSIONS

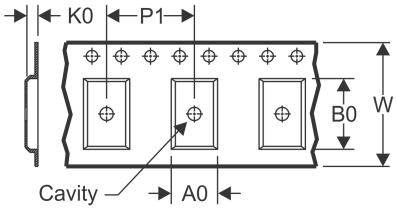

A0	Dimension designed to accommodate the component width
B0	Dimension designed to accommodate the component length
K0	Dimension designed to accommodate the component thickness
W	Overall width of the carrier tape
P1	Pitch between successive cavity centers

QUADRANT ASSIGNMENTS FOR PIN 1 ORIENTATION IN TAPE

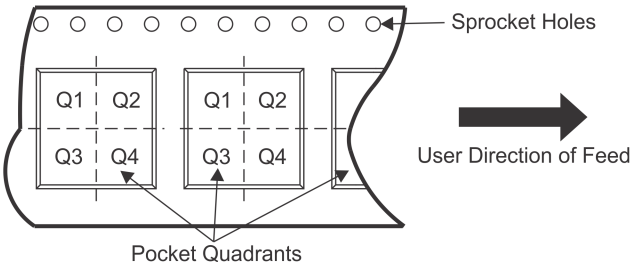

*All dimensions are nominal

Device	Package Type	Package Drawing	Pins	SPQ	Reel Diameter (mm)	Reel Width W1 (mm)	A0 (mm)	B0 (mm)	K0 (mm)	P1 (mm)	W (mm)	Pin1 Quadrant
TPS2045ADR	SOIC	D	8	2500	330.0	12.4	6.4	5.2	2.1	8.0	12.0	Q1
TPS2048ADR	SOIC	D	16	2500	330.0	16.4	6.5	10.3	2.1	8.0	16.0	Q1
TPS2055ADR	SOIC	D	8	2500	330.0	12.4	6.4	5.2	2.1	8.0	12.0	Q1
TPS2056ADR	SOIC	D	8	2500	330.0	12.4	6.4	5.2	2.1	8.0	12.0	Q1
TPS2057ADR	SOIC	D	16	2500	330.0	16.4	6.5	10.3	2.1	8.0	16.0	Q1

TAPE AND REEL BOX DIMENSIONS

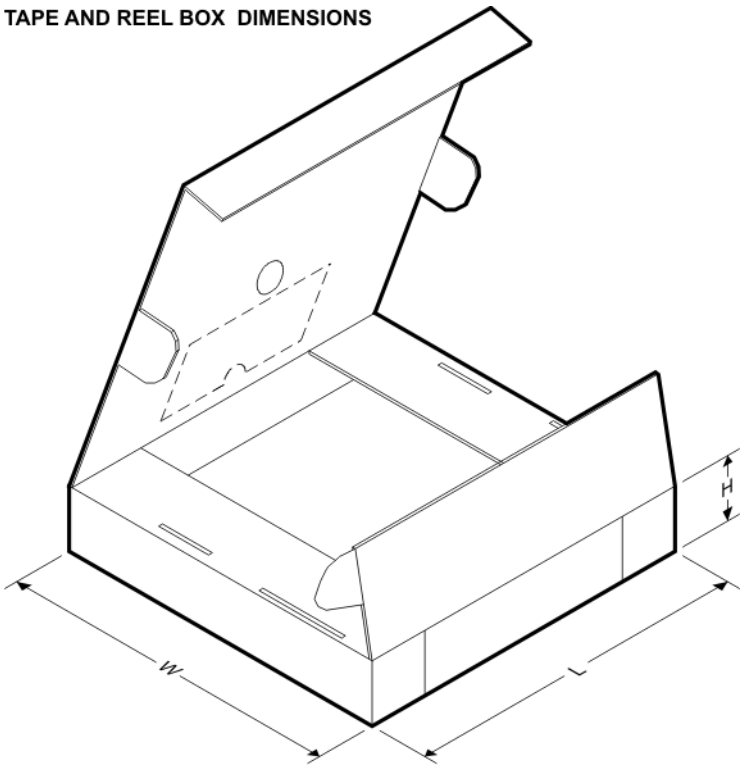

*All dimensions are nominal

Device	Package Type	Package Drawing	Pins	SPQ	Length (mm)	Width (mm)	Height (mm)
TPS2045ADR	SOIC	D	8	2500	340.5	336.1	25.0
TPS2048ADR	SOIC	D	16	2500	340.5	336.1	32.0
TPS2055ADR	SOIC	D	8	2500	340.5	336.1	25.0
TPS2056ADR	SOIC	D	8	2500	340.5	336.1	25.0
TPS2057ADR	SOIC	D	16	2500	340.5	336.1	32.0

TUBE

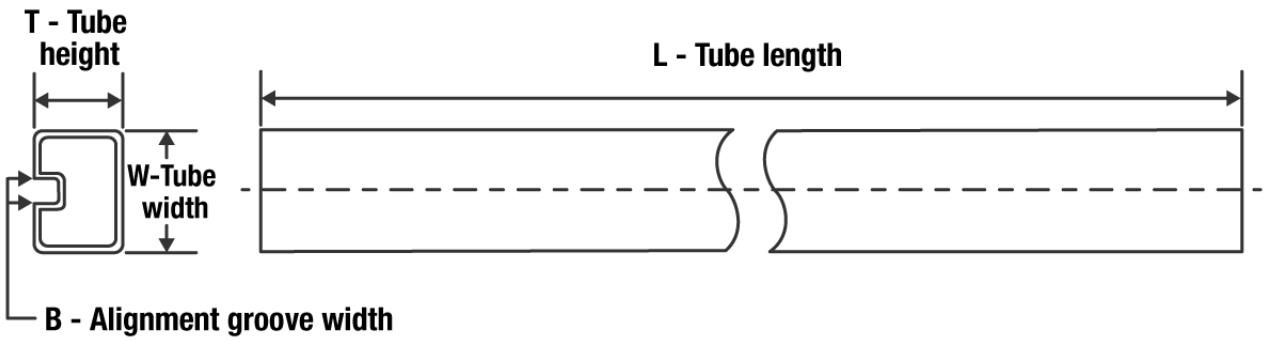

*All dimensions are nominal

Device	Package Name	Package Type	Pins	SPQ	L (mm)	W (mm)	T (µm)	B (mm)
TPS2045AD	D	SOIC	8	75	507	8	3940	4.32
TPS2046AD	D	SOIC	8	75	507	8	3940	4.32
TPS2048AD	D	SOIC	16	40	507	8	3940	4.32
TPS2055AD	D	SOIC	8	75	507	8	3940	4.32
TPS2056AD	D	SOIC	8	75	507	8	3940	4.32
TPS2056ADG4	D	SOIC	8	75	507	8	3940	4.32
TPS2057AD	D	SOIC	16	40	507	8	3940	4.32
TPS2057ADG4	D	SOIC	16	40	507	8	3940	4.32
TPS2058AD	D	SOIC	16	40	507	8	3940	4.32

D (R–PDSO–G16) PLASTIC SMALL OUTLINE

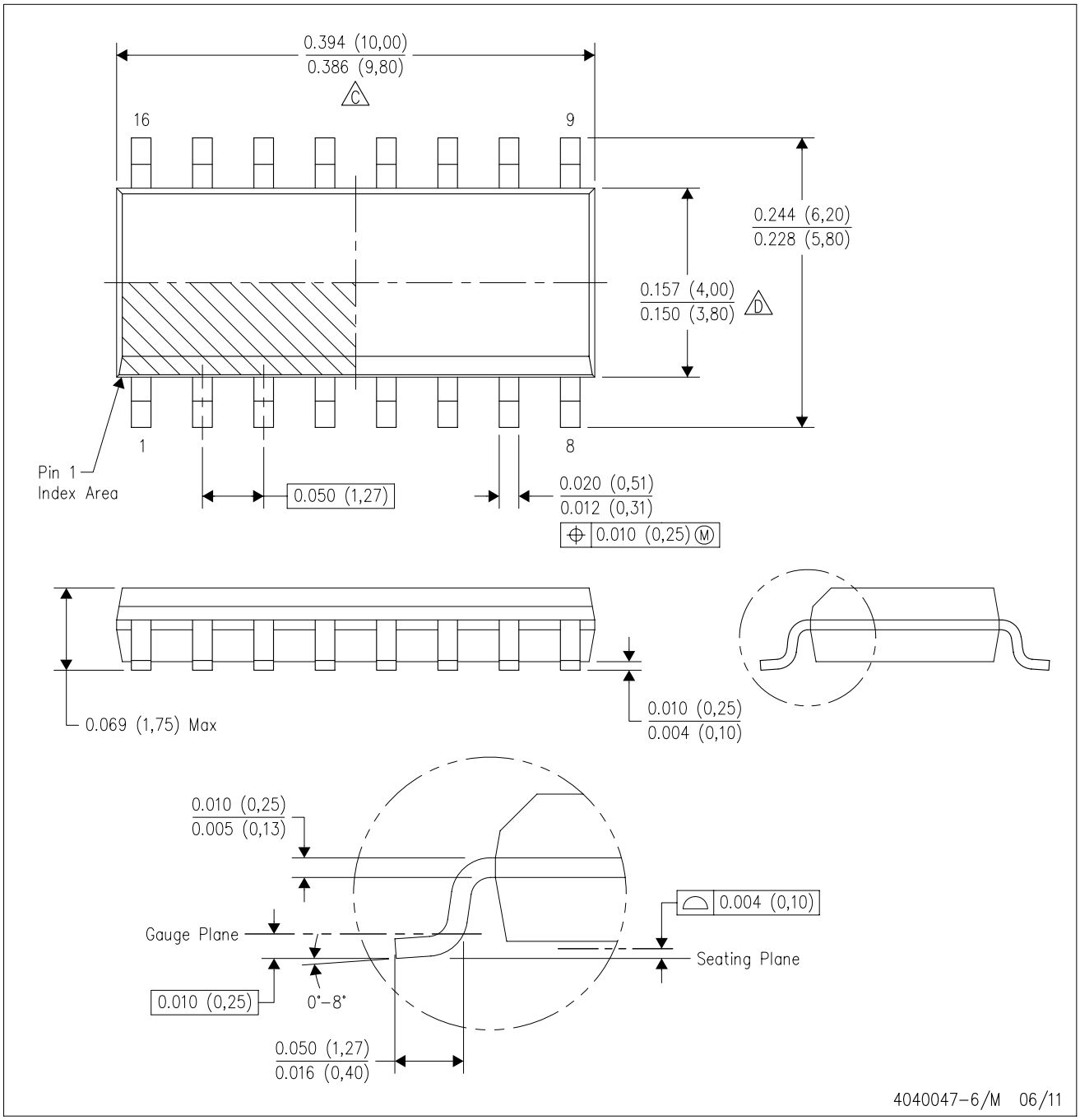

NOTES:
A. All linear dimensions are in inches (millimeters).
B. This drawing is subject to change without notice.
C. Body length does not include mold flash, protrusions, or gate burrs. Mold flash, protrusions, or gate burrs shall not exceed 0.006 (0,15) each side.
D. Body width does not include interlead flash. Interlead flash shall not exceed 0.017 (0,43) each side.
E. Reference JEDEC MS–012 variation AC.

D (R–PDSO–G16) PLASTIC SMALL OUTLINE

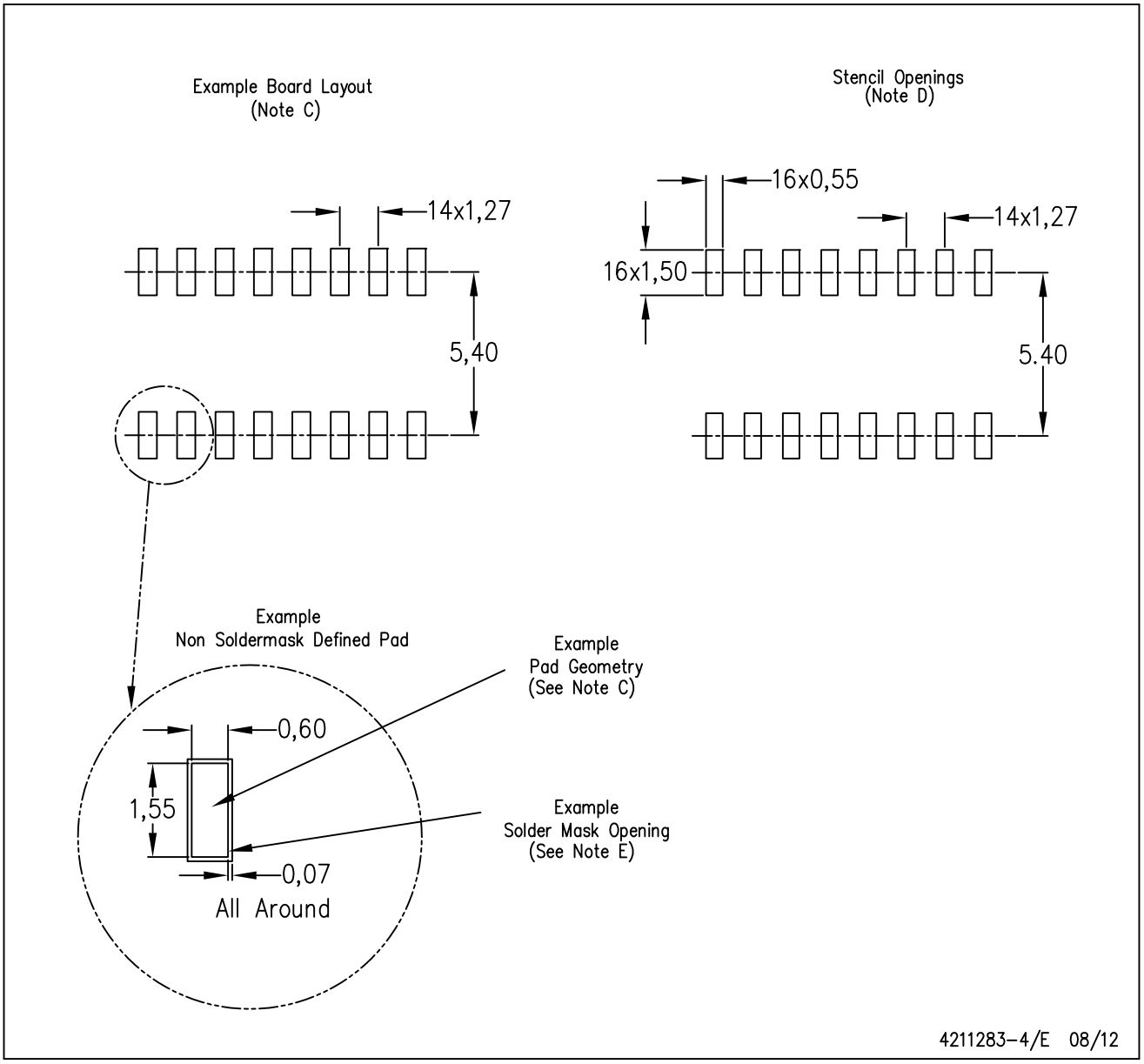

NOTES:
A. All linear dimensions are in millimeters.
B. This drawing is subject to change without notice.
C. Publication IPC–7351 is recommended for alternate designs.
D. Laser cutting apertures with trapezoidal walls and also rounding corners will offer better paste release. Customers should contact their board assembly site for stencil design recommendations. Refer to IPC–7525 for other stencil recommendations.
E. Customers should contact their board fabrication site for solder mask tolerances between and around signal pads.

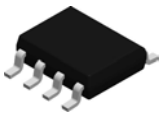

PACKAGE OUTLINE

D0008A

SOIC - 1.75 mm max height

SMALL OUTLINE INTEGRATED CIRCUIT

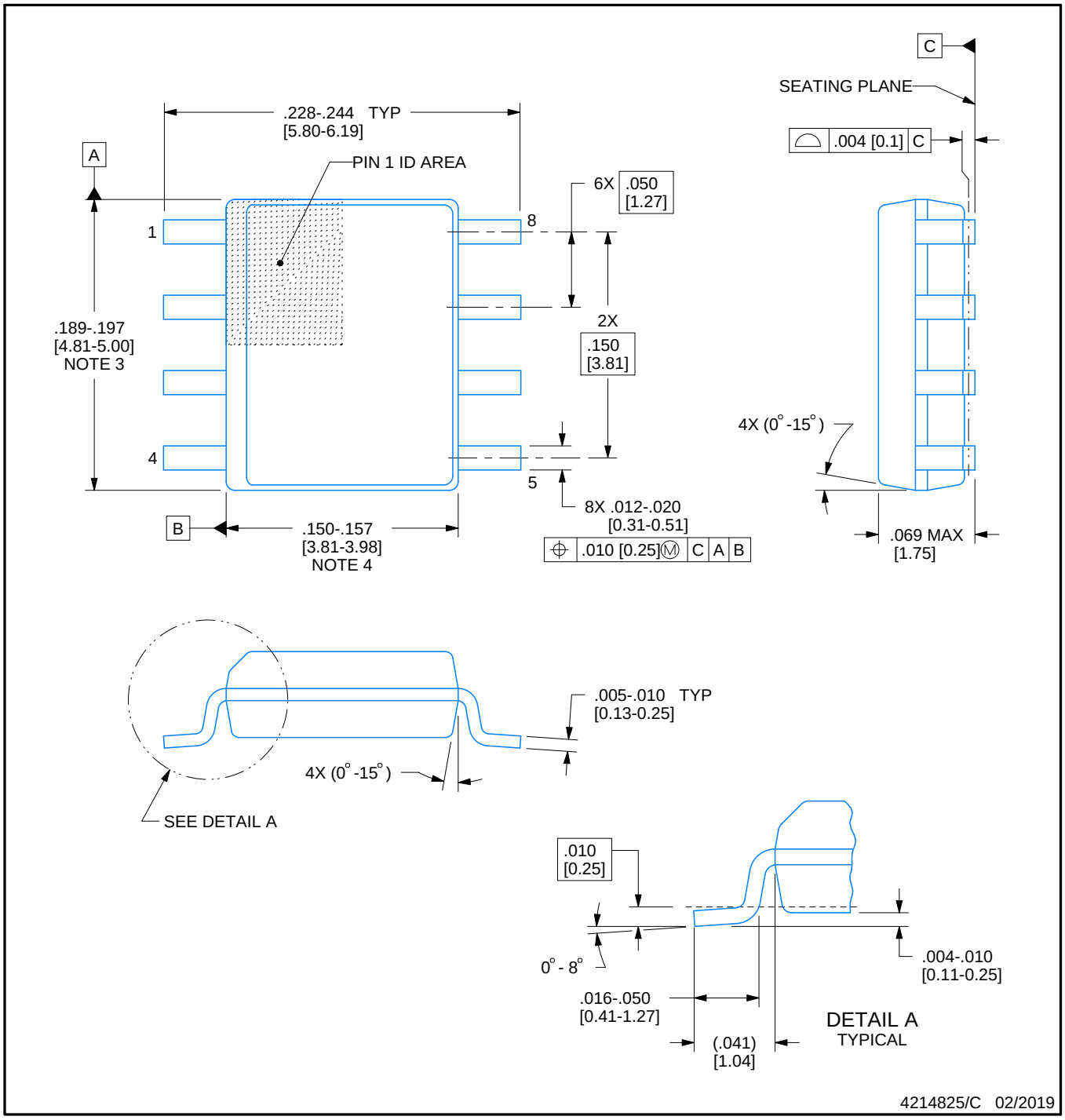

NOTES:

1. Linear dimensions are in inches [millimeters]. Dimensions in parenthesis are for reference only. Controlling dimensions are in inches. Dimensioning and tolerancing per ASME Y14.5M.
2. This drawing is subject to change without notice.
3. This dimension does not include mold flash, protrusions, or gate burrs. Mold flash, protrusions, or gate burrs shall not exceed .006 [0.15] per side.
4. This dimension does not include interlead flash.
5. Reference JEDEC registration MS-012, variation AA.

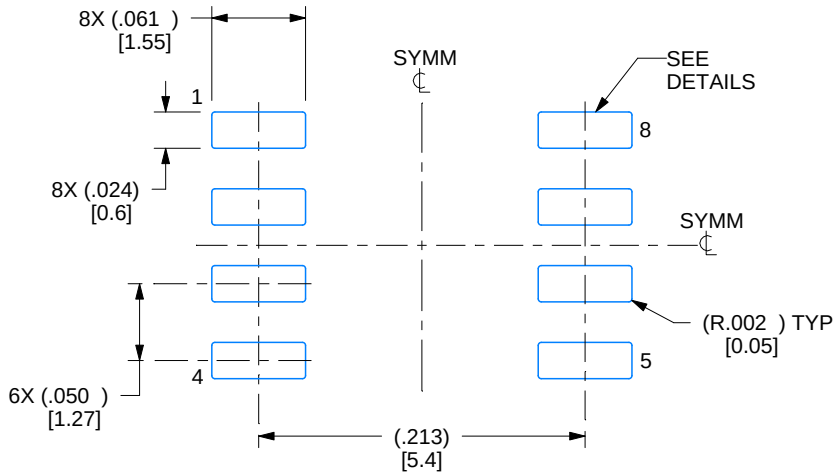

LAND PATTERN EXAMPLE
EXPOSED METAL SHOWN
SCALE:8X

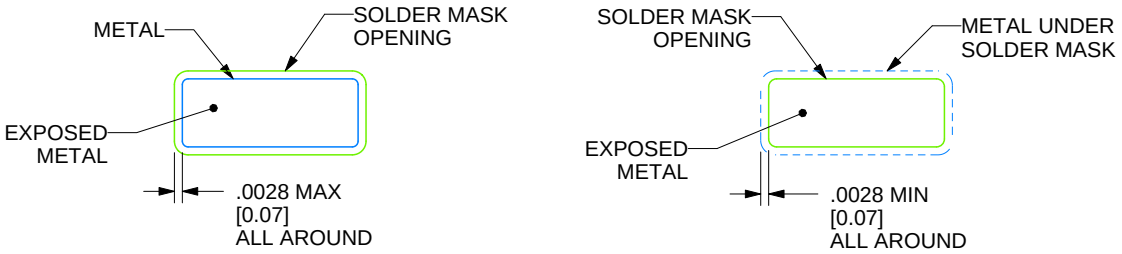

SOLDER MASK DETAILS

4214825/C 02/2019

NOTES: (continued)

6. Publication IPC-7351 may have alternate designs.
7. Solder mask tolerances between and around signal pads can vary based on board fabrication site.

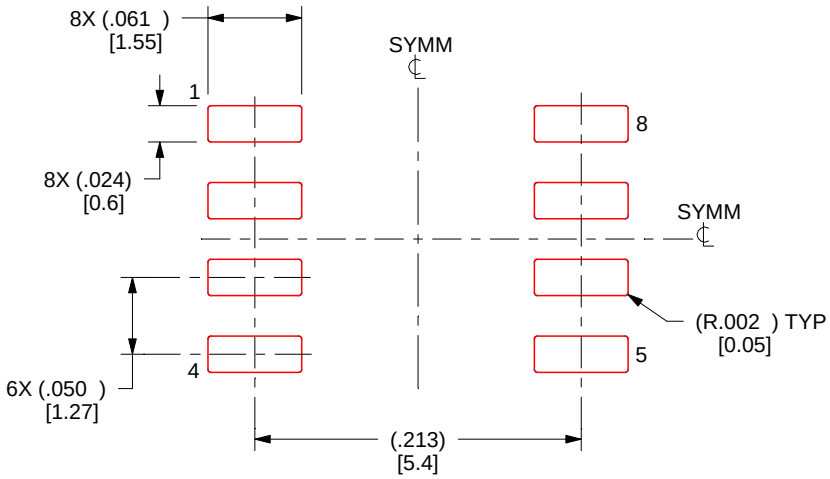

SOLDER PASTE EXAMPLE
BASED ON .005 INCH [0.125 MM] THICK STENCIL
SCALE:8X

4214825/C 02/2019

NOTES: (continued)

8. Laser cutting apertures with trapezoidal walls and rounded corners may offer better paste release. IPC-7525 may have alternate design recommendations.
9. Board assembly site may have different recommendations for stencil design.

IMPORTANT NOTICE AND DISCLAIMER

TI PROVIDES TECHNICAL AND RELIABILITY DATA (INCLUDING DATA SHEETS), DESIGN RESOURCES (INCLUDING REFERENCE DESIGNS), APPLICATION OR OTHER DESIGN ADVICE, WEB TOOLS, SAFETY INFORMATION, AND OTHER RESOURCES “AS IS” AND WITH ALL FAULTS, AND DISCLAIMS ALL WARRANTIES, EXPRESS AND IMPLIED, INCLUDING WITHOUT LIMITATION ANY IMPLIED WARRANTIES OF MERCHANTABILITY, FITNESS FOR A PARTICULAR PURPOSE OR NON-INFRINGEMENT OF THIRD PARTY INTELLECTUAL PROPERTY RIGHTS.

These resources are intended for skilled developers designing with TI products. You are solely responsible for (1) selecting the appropriate TI products for your application, (2) designing, validating and testing your application, and (3) ensuring your application meets applicable standards, and any other safety, security, regulatory or other requirements.

These resources are subject to change without notice. TI grants you permission to use these resources only for development of an application that uses the TI products described in the resource. Other reproduction and display of these resources is prohibited. No license is granted to any other TI intellectual property right or to any third party intellectual property right. TI disclaims responsibility for, and you will fully indemnify TI and its representatives against, any claims, damages, costs, losses, and liabilities arising out of your use of these resources.

TI’s products are provided subject to TI’s Terms of Sale or other applicable terms available either on ti.com or provided in conjunction with such TI products. TI’s provision of these resources does not expand or otherwise alter TI’s applicable warranties or warranty disclaimers for TI products.

TI objects to and rejects any additional or different terms you may have proposed.

Mailing Address: Texas Instruments, Post Office Box 655303, Dallas, Texas 75265
Copyright © 2022, Texas Instruments Incorporated