LM4128/LM4128Q SOT-23 Precision Micropower Series Voltage Reference

Check for Samples: LM4128, LM4128Q

FEATURES

- **Output Voltage Initial Accuracy 0.1%**
- **Low Temperature Coefficient 75 ppm/°C**
- **Low Supply Current, 60 µA**
- **Enable Pin Allowing a 3 µA Shutdown Mode**
- **Up to 20 mA Output Current**
- **Voltage Options 1.8V, 2.048V, 2.5V, 3.0V, 3.3V, 4.096V**
- **Custom Voltage Options Available (1.8V to 4.096V)**
- **V_{IN} Range of V_{REF} + 400 mV to 5.5V @10 mA**
- **Stable with Low ESR Ceramic Capacitors**
- **5-Pin SOT-23 Package**
- **−40°C to 125°C Junction Temperature Range**
- **LM4128AQ/BQ/CQ/DQ are AEC-Q100 Grade 1 Qualified and are Manufactured on an Automotive Grade Flow**

APPLICATIONS

- **Instrumentation & Process Control**
- **Test Equipment**
- **Data Acquisition Systems**
- **Base Stations**
- **Servo Systems**
- **Portable, Battery Powered Equipment**
- **Automotive & Industrial Electronics**
- **Precision Regulators**
- **Battery Chargers**
- **Communications**
- **Medical Equipment**

DESCRIPTION

Ideal for space critical applications, the LM4128 precision voltage reference is available in the SOT-23 surface-mount package. The LM4128's advanced design eliminates the need for an external stabilizing capacitor while ensuring stability with capacitive loads up to 10 µF, thus making the LM4128 easy to use.

Series references provide lower power consumption than shunt references, since they do not have to idle the maximum possible load current under no load conditions. This advantage, the low quiescent current (60 µA), and the low dropout voltage (400 mV) make the LM4128 ideal for battery-powered solutions.

The LM4128 is available in four grades (A, B, C, and D) for greater flexibility. The best grade devices (A) have an initial accuracy of 0.1% with ensured temperature coefficient of 75 ppm/°C or less, while the lowest grade parts (D) have an initial accuracy of 1.0% and a tempco of 100 ppm/°C.

Typical Application Circuit

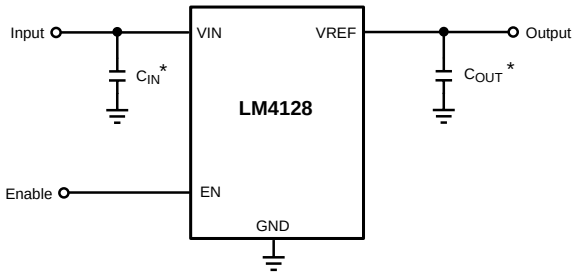

*Note: The capacitor C_{IN} is required and the capacitor C_{OUT} is optional.

Please be aware that an important notice concerning availability, standard warranty, and use in critical applications of Texas Instruments semiconductor products and disclaimers thereto appears at the end of this data sheet.

All trademarks are the property of their respective owners.

PRODUCTION DATA information is current as of publication date. Products conform to specifications per the terms of the Texas Instruments standard warranty. Production processing does not necessarily include testing of all parameters.

Copyright © 2006–2013, Texas Instruments Incorporated

Connection Diagram

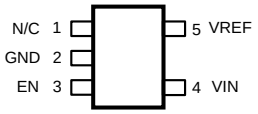

5-Pin SOT-23 Package – Top View
See Package Number DBV (R-PDSO-G5)

PIN DESCRIPTIONS

Pin #	Name	Function
1	N/C	No connect pin, leave floating
2	GND	Ground
3	EN	Enable pin
4	VIN	Input supply
5	VREF	Reference output

These devices have limited built-in ESD protection. The leads should be shorted together or the device placed in conductive foam during storage or handling to prevent electrostatic damage to the MOS gates.

Absolute Maximum Ratings(1)

Maximum Voltage on any input		-0.3 to 6V
Output short circuit duration		Indefinite
Power Dissipation (T_A = 25°C)(2)		350 mW
Storage Temperature Range		−65°C to 150°C
Lead Temperature	(soldering, 10sec)	260°C
	Vapor Phase (60 sec)	215°C
	Infrared (15sec)	220°C
ESD Susceptibility(3)	Human Body Model	2 kV

(1) Absolute Maximum Ratings indicate limits beyond which damage may occur to the device. Operating Ratings indicate conditions for which the device is intended to be functional, but do not ensure specific performance limits. For ensured specifications, see Electrical Characteristics.
(2) Without PCB copper enhancements. The maximum power dissipation must be de-rated at elevated temperatures and is limited by T_{JMAX} (maximum junction temperature), θ_{J-A} (junction to ambient thermal resistance) and T_A (ambient temperature). The maximum power dissipation at any temperature is: $P_{DissMAX} = (T_{JMAX} - T_A) / \theta_{J-A}$ up to the value listed in the Absolute Maximum Ratings. θ_{J-A} for SOT-23 package is 220°C/W, T_{JMAX} = 125°C.
(3) The human body model is a 100 pF capacitor discharged through a 1.5 kΩ resistor into each pin.

Operating Ratings

Maximum Input Supply Voltage	5.5V
Maximum Enable Input Voltage	V_{IN}
Maximum Load Current	20mA
Junction Temperature Range (T_J)	−40°C to +125°C

Copyright © 2006–2013, Texas Instruments Incorporated

Electrical Characteristics
LM4128-1.8 (V_{OUT} = 1.8V)

Limits in standard type are for T_J = 25°C only, and limits in **boldface type** apply over the junction temperature (T_J) range of -40°C to +125°C unless otherwise specified. Minimum and Maximum limits are ensured through test, design, or statistical correlation. Typical values represent the most likely parametric norm at T_J = 25°C, and are provided for reference purposes only. Unless otherwise specified V_{IN} = 5V and I_{LOAD} = 0A.

Symbol	Parameter	Conditions	Min (1)	Typ (2)	Max (1)	Unit
V_{REF}	Output Voltage Initial Accuracy					
	LM4128A-1.8	(A Grade - 0.1%)	-0.1		+0.1	%
	LM4128B-1.8	(B Grade - 0.2%)	-0.2		+0.2	
	LM4128C-1.8	(C Grade - 0.5%)	-0.5		+0.5	
	LM4128D-1.8	(D Grade - 1.0%)	-1.0		+1.0	
TCV_{REF} / °C (3)	Temperature Coefficient	LM4128A-1.8			**75**	ppm / °C
		LM4128B-1.8			**75**	
		LM4128C-1.8			**100**	
		LM4128D-1.8			**100**	
I_Q	Supply Current			60	**100**	µA
I_{Q_SD}	Supply Current in Shutdown	EN = 0V		3	**7**	µA
$\Delta V_{REF}/\Delta V_{IN}$	Line Regulation	V_{REF} + 400 mV ≤ V_{IN} ≤ 5.5V		30		ppm / V
$\Delta V_{REF}/\Delta I_{LOAD}$	Load Regulation	0 mA ≤ I_{LOAD} ≤ 20 mA		25	**120**	ppm / mA
ΔV_{REF}	Long Term Stability (4)	1000 Hrs		50		ppm
	Thermal Hysteresis (5)	-40°C ≤ T_J ≤ +125°C		75		
V_{IN} - V_{REF}	Dropout Voltage (6)	I_{LOAD} = 10 mA		200	**400**	mV
V_N	Output Noise Voltage	0.1 Hz to 10 Hz		170		μV_{PP}
I_{SC}	Short Circuit Current				**75**	mA
V_{IL}	Enable Pin Maximum Low Input Level				**35**	%V
V_{IH}	Enable Pin Minimum High Input Level		**65**			%V

(1) Limits are 100% production tested at 25°C. Limits over the operating temperature range are ensured through correlation using Statistical Quality Control.
(2) Typical numbers are at 25°C and represent the most likely parametric norm.
(3) Temperature coefficient is measured by the "Box" method; i.e., the maximum ΔV_{REF} is divided by the maximum ΔT.
(4) Long term stability is V_{REF} @25°C measured during 1000 hrs.
(5) Thermal hysteresis is defined as the change in +25°C output voltage before and after cycling the device from (-40°C to 125°C).
(6) Dropout voltage is defined as the minimum input to output differential at which the output voltage drops by 0.5% below the value measured with a 5V input.

Copyright © 2006–2013, Texas Instruments Incorporated

Electrical Characteristics
LM4128-2.0 (V_{OUT} = 2.048V)

Limits in standard type are for T_J = 25°C only, and limits in **boldface type** apply over the junction temperature (T_J) range of -40°C to +125°C unless otherwise specified. Minimum and Maximum limits are ensured through test, design, or statistical correlation. Typical values represent the most likely parametric norm at T_J = 25°C, and are provided for reference purposes only. Unless otherwise specified V_{IN} = 5V and I_{LOAD} = 0A.

Symbol	Parameter	Conditions	Min (1)	Typ (2)	Max (1)	Unit
V_{REF}	Output Voltage Initial Accuracy					
	LM4128A-2.0	(A Grade - 0.1%)	-0.1		+0.1	%
	LM4128B-2.0	(B Grade - 0.2%)	-0.2		+0.2	
	LM4128C-2.0	(C Grade - 0.5%)	-0.5		+0.5	
	LM4128D-2.0	(D Grade - 1.0%)	-1.0		+1.0	
TCV_{REF} / °C (3)	Temperature Coefficient	LM4128A-2.0			**75**	ppm / °C
		LM4128B-2.0			**75**	
		LM4128C-2.0			**100**	
		LM4128D-2.0			**100**	
I_Q	Supply Current			60	**100**	µA
I_{Q_SD}	Supply Current in Shutdown	EN = 0V		3	**7**	µA
$\Delta V_{REF}/\Delta V_{IN}$	Line Regulation	V_{REF} + 400 mV ≤ V_{IN} ≤ 5.5V		30		ppm / V
$\Delta V_{REF}/\Delta I_{LOAD}$	Load Regulation	0 mA ≤ I_{LOAD} ≤ 20 mA		25	**120**	ppm / mA
ΔV_{REF}	Long Term Stability (4)	1000 Hrs		50		ppm
	Thermal Hysteresis (5)	-40°C ≤ T_J ≤ +125°C		75		
V_{IN} - V_{REF}	Dropout Voltage (6)	I_{LOAD} = 10 mA		175	**400**	mV
V_N	Output Noise Voltage	0.1 Hz to 10 Hz		190		μV_{PP}
I_{SC}	Short Circuit Current				**75**	mA
V_{IL}	Enable Pin Maximum Low Input Level				**35**	%V
V_{IH}	Enable Pin Minimum High Input Level		**65**			%V

(1) Limits are 100% production tested at 25°C. Limits over the operating temperature range are ensured through correlation using Statistical Quality Control.
(2) Typical numbers are at 25°C and represent the most likely parametric norm.
(3) Temperature coefficient is measured by the "Box" method; i.e., the maximum ΔV_{REF} is divided by the maximum ΔT.
(4) Long term stability is V_{REF} @25°C measured during 1000 hrs.
(5) Thermal hysteresis is defined as the change in +25°C output voltage before and after cycling the device from (-40°C to 125°C).
(6) Dropout voltage is defined as the minimum input to output differential at which the output voltage drops by 0.5% below the value measured with a 5V input.

Copyright © 2006–2013, Texas Instruments Incorporated

Electrical Characteristics
LM4128-2.5 (V_{OUT} = 2.5V)

Limits in standard type are for T_J = 25°C only, and limits in **boldface type** apply over the junction temperature (T_J) range of -40°C to +125°C unless otherwise specified. Minimum and Maximum limits are ensured through test, design, or statistical correlation. Typical values represent the most likely parametric norm at T_J = 25°C, and are provided for reference purposes only. Unless otherwise specified V_{IN} = 5V and I_{LOAD} = 0A.

Symbol	Parameter	Conditions	Min (1)	Typ (2)	Max (1)	Unit
V_{REF}	Output Voltage Initial Accuracy					
	LM4128A-2.5	(A Grade - 0.1%)	-0.1		+0.1	%
	LM4128B-2.5	(B Grade - 0.2%)	-0.2		+0.2	
	LM4128C-2.5	(C Grade - 0.5%)	-0.5		+0.5	
	LM4128D-2.5	(D Grade - 1.0%)	-1.0		+1.0	
TCV_{REF} / °C (3)	Temperature Coefficient	LM4128A-2.5			**75**	ppm / °C
		LM4128B-2.5			**75**	
		LM4128C-2.5			**100**	
		LM4128D-2.5			**100**	
I_Q	Supply Current			60	**100**	µA
I_{Q_SD}	Supply Current in Shutdown	EN = 0V		3	**7**	µA
$\Delta V_{REF}/\Delta V_{IN}$	Line Regulation	V_{REF} + 400 mV ≤ V_{IN} ≤ 5.5V		50		ppm / V
$\Delta V_{REF}/\Delta I_{LOAD}$	Load Regulation	0 mA ≤ I_{LOAD} ≤ 20 mA		25	**120**	ppm / mA
ΔV_{REF}	Long Term Stability (4)	1000 Hrs		50		ppm
	Thermal Hysteresis (5)	-40°C ≤ T_J ≤ +125°C		75		
V_{IN} - V_{REF}	Dropout Voltage (6)	I_{LOAD} = 10 mA		175	**400**	mV
V_N	Output Noise Voltage	0.1 Hz to 10 Hz		275		μV_{PP}
I_{SC}	Short Circuit Current				**75**	mA
V_{IL}	Enable Pin Maximum Low Input Level				**35**	%V
V_{IH}	Enable Pin Minimum High Input Level		**65**			%V

(1) Limits are 100% production tested at 25°C. Limits over the operating temperature range are ensured through correlation using Statistical Quality Control.
(2) Typical numbers are at 25°C and represent the most likely parametric norm.
(3) Temperature coefficient is measured by the "Box" method; i.e., the maximum ΔV_{REF} is divided by the maximum ΔT.
(4) Long term stability is V_{REF} @25°C measured during 1000 hrs.
(5) Thermal hysteresis is defined as the change in +25°C output voltage before and after cycling the device from (-40°C to 125°C).
(6) Dropout voltage is defined as the minimum input to output differential at which the output voltage drops by 0.5% below the value measured with a 5V input.

Copyright © 2006–2013, Texas Instruments Incorporated

Electrical Characteristics
LM4128-3.0 (V_{OUT} = 3.0V)

Limits in standard type are for T_J = 25°C only, and limits in **boldface type** apply over the junction temperature (T_J) range of -40°C to +125°C unless otherwise specified. Minimum and Maximum limits are ensured through test, design, or statistical correlation. Typical values represent the most likely parametric norm at T_J = 25°C, and are provided for reference purposes only. Unless otherwise specified V_{IN} = 5V and I_{LOAD} = 0A.

Symbol	Parameter	Conditions	Min (1)	Typ (2)	Max (1)	Unit
V_{REF}	Output Voltage Initial Accuracy					
	LM4128A-3.0	(A Grade - 0.1%)	-0.1		+0.1	%
	LM4128B-3.0	(B Grade - 0.2%)	-0.2		+0.2	
	LM4128C-3.0	(C Grade - 0.5%)	-0.5		+0.5	
	LM4128D-3.0	(D Grade - 1.0%)	-1.0		+1.0	
TCV_{REF} / °C (3)	Temperature Coefficient	LM4128A-3.0			**75**	ppm / °C
		LM4128B-3.0			**75**	
		LM4128C-3.0			**100**	
		LM4128D-3.0			**100**	
I_Q	Supply Current			60	**100**	µA
I_{Q_SD}	Supply Current in Shutdown	EN = 0V		3	**7**	µA
$\Delta V_{REF}/\Delta V_{IN}$	Line Regulation	V_{REF} + 400 mV ≤ V_{IN} ≤ 5.5V		70		ppm / V
$\Delta V_{REF}/\Delta I_{LOAD}$	Load Regulation	0 mA ≤ I_{LOAD} ≤ 20 mA		25	**120**	ppm / mA
ΔV_{REF}	Long Term Stability (4)	1000 Hrs		50		ppm
	Thermal Hysteresis (5)	-40°C ≤ T_J ≤ +125°C		75		
V_{IN} - V_{REF}	Dropout Voltage (6)	I_{LOAD} = 10 mA		175	**400**	mV
V_N	Output Noise Voltage	0.1 Hz to 10 Hz		285		μV_{PP}
I_{SC}	Short Circuit Current				**75**	mA
V_{IL}	Enable Pin Maximum Low Input Level				**35**	%V
V_{IH}	Enable Pin Minimum High Input Level		**65**			%V

(1) Limits are 100% production tested at 25°C. Limits over the operating temperature range are ensured through correlation using Statistical Quality Control.
(2) Typical numbers are at 25°C and represent the most likely parametric norm.
(3) Temperature coefficient is measured by the "Box" method; i.e., the maximum ΔV_{REF} is divided by the maximum ΔT.
(4) Long term stability is V_{REF} @25°C measured during 1000 hrs.
(5) Thermal hysteresis is defined as the change in +25°C output voltage before and after cycling the device from (-40°C to 125°C).
(6) Dropout voltage is defined as the minimum input to output differential at which the output voltage drops by 0.5% below the value measured with a 5V input.

Copyright © 2006–2013, Texas Instruments Incorporated

Electrical Characteristics
LM4128-3.3 (V_{OUT} = 3.3V)

Limits in standard type are for T_J = 25°C only, and limits in **boldface type** apply over the junction temperature (T_J) range of -40°C to +125°C unless otherwise specified. Minimum and Maximum limits are ensured through test, design, or statistical correlation. Typical values represent the most likely parametric norm at T_J = 25°C, and are provided for reference purposes only. Unless otherwise specified V_{IN} = 5V and I_{LOAD} = 0A.

Symbol	Parameter	Conditions	Min (1)	Typ (2)	Max (1)	Unit
V_{REF}	Output Voltage Initial Accuracy					
	LM4128A-3.3	(A Grade - 0.1%)	-0.1		+0.1	%
	LM4128B-3.3	(B Grade - 0.2%)	-0.2		+0.2	
	LM4128C-3.3	(C Grade - 0.5%)	-0.5		+0.5	
	LM4128D-3.3	(D Grade - 1.0%)	-1.0		+1.0	
TCV_{REF} / °C (3)	Temperature Coefficient	LM4128A-3.3			**75**	ppm / °C
		LM4128B-3.3			**75**	
		LM4128C-3.3			**100**	
		LM4128D-3.3			**100**	
I_Q	Supply Current			60	**100**	µA
I_{Q_SD}	Supply Current in Shutdown	EN = 0V		3	**7**	µA
$\Delta V_{REF}/\Delta V_{IN}$	Line Regulation	V_{REF} + 400 mV ≤ V_{IN} ≤ 5.5V		85		ppm / V
$\Delta V_{REF}/\Delta I_{LOAD}$	Load Regulation	0 mA ≤ I_{LOAD} ≤ 20 mA		25	**120**	ppm / mA
ΔV_{REF}	Long Term Stability (4)	1000 Hrs		50		ppm
	Thermal Hysteresis (5)	-40°C ≤ T_J ≤ +125°C		75		
V_{IN} - V_{REF}	Dropout Voltage (6)	I_{LOAD} = 10 mA		175	**400**	mV
V_N	Output Noise Voltage	0.1 Hz to 10 Hz		310		μV_{PP}
I_{SC}	Short Circuit Current				**75**	mA
V_{IL}	Enable Pin Maximum Low Input Level				**35**	%V
V_{IH}	Enable Pin Minimum High Input Level		**65**			%V

(1) Limits are 100% production tested at 25°C. Limits over the operating temperature range are ensured through correlation using Statistical Quality Control.
(2) Typical numbers are at 25°C and represent the most likely parametric norm.
(3) Temperature coefficient is measured by the "Box" method; i.e., the maximum ΔV_{REF} is divided by the maximum ΔT.
(4) Long term stability is V_{REF} @25°C measured during 1000 hrs.
(5) Thermal hysteresis is defined as the change in +25°C output voltage before and after cycling the device from (-40°C to 125°C).
(6) Dropout voltage is defined as the minimum input to output differential at which the output voltage drops by 0.5% below the value measured with a 5V input.

Copyright © 2006–2013, Texas Instruments Incorporated

Electrical Characteristics
LM4128-4.1 (V_{OUT} = 4.096V)

Limits in standard type are for T_J = 25°C only, and limits in **boldface type** apply over the junction temperature (T_J) range of -40°C to +125°C unless otherwise specified. Minimum and Maximum limits are ensured through test, design, or statistical correlation. Typical values represent the most likely parametric norm at T_J = 25°C, and are provided for reference purposes only. Unless otherwise specified V_{IN} = 5V and I_{LOAD} = 0A.

Symbol	Parameter	Conditions	Min (1)	Typ (2)	Max (1)	Unit
V_{REF}	Output Voltage Initial Accuracy					
	LM4128A-4.1	(A Grade - 0.1%)	-0.1		+0.1	%
	LM4128B-4.1	(B Grade - 0.2%)	-0.2		+0.2	
	LM4128C-4.1	(C Grade - 0.5%)	-0.5		+0.5	
	LM4128D-4.1	(D Grade - 1.0%)	-1.0		+1.0	
TCV_{REF} / °C (3)	Temperature Coefficient	LM4128A-4.1			**75**	ppm / °C
		LM4128B-4.1			**75**	
		LM4128C-4.1			**100**	
		LM4128D-4.1			**100**	
I_Q	Supply Current			60	**100**	µA
I_{Q_SD}	Supply Current in Shutdown	EN = 0V		3	**7**	µA
$\Delta V_{REF}/\Delta V_{IN}$	Line Regulation	V_{REF} + 400 mV ≤ V_{IN} ≤ 5.5V		100		ppm / V
$\Delta V_{REF}/\Delta I_{LOAD}$	Load Regulation	0 mA ≤ I_{LOAD} ≤ 20 mA		25	**120**	ppm / mA
ΔV_{REF}	Long Term Stability (4)	1000 Hrs		50		ppm
	Thermal Hysteresis (5)	-40°C ≤ T_J ≤ +125°C		75		
V_{IN} - V_{REF}	Dropout Voltage (6)	I_{LOAD} = 10 mA		175	**400**	mV
V_N	Output Noise Voltage	0.1 Hz to 10 Hz		350		μV_{PP}
I_{SC}	Short Circuit Current				**75**	mA
V_{IL}	Enable Pin Maximum Low Input Level				**35**	%V
V_{IH}	Enable Pin Minimum High Input Level		**65**			%V

(1) Limits are 100% production tested at 25°C. Limits over the operating temperature range are ensured through correlation using Statistical Quality Control.
(2) Typical numbers are at 25°C and represent the most likely parametric norm.
(3) Temperature coefficient is measured by the "Box" method; i.e., the maximum ΔV_{REF} is divided by the maximum ΔT.
(4) Long term stability is V_{REF} @25°C measured during 1000 hrs.
(5) Thermal hysteresis is defined as the change in +25°C output voltage before and after cycling the device from (-40°C to 125°C).
(6) Dropout voltage is defined as the minimum input to output differential at which the output voltage drops by 0.5% below the value measured with a 5V input.

Copyright © 2006–2013, Texas Instruments Incorporated

Typical Performance Characteristics for 2.5V

Output Voltage vs Temperature

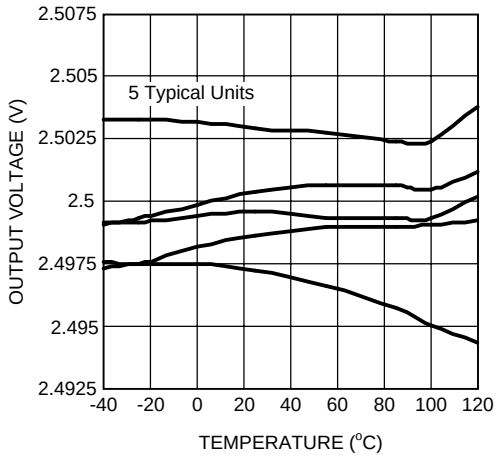

Figure 1.

Load Regulation

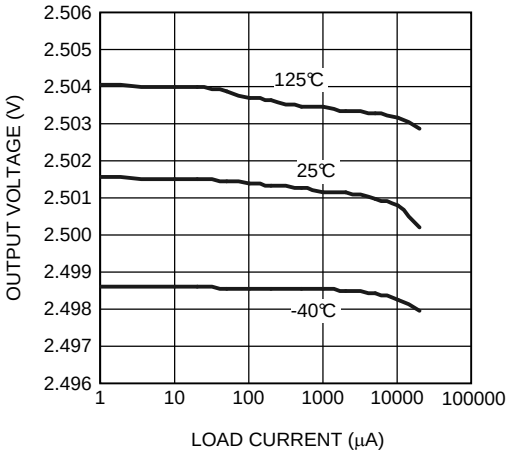

Figure 2.

Line Regulation

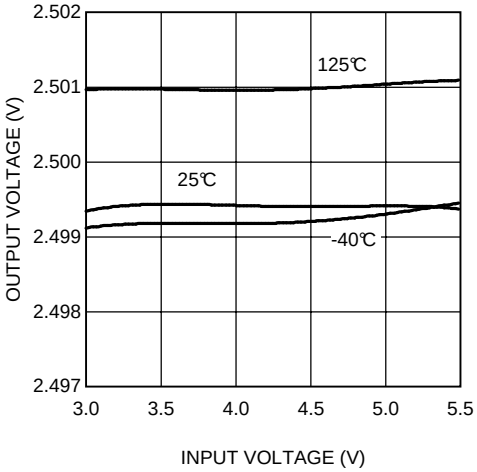

Figure 3.

0.1 - 10 Hz Noise

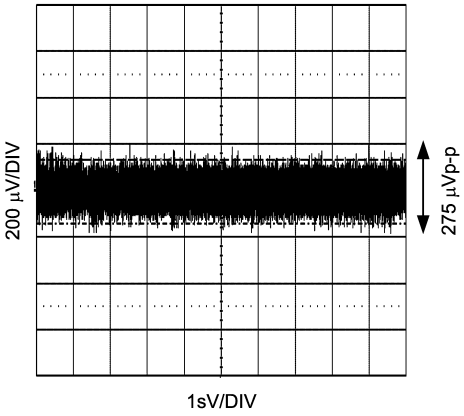

Figure 4.

Output Voltage Noise Spectrum

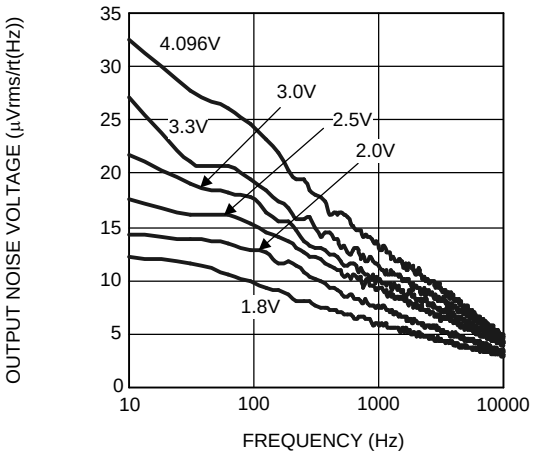

Figure 5.

Power Supply Rejection Ratio vs Frequency

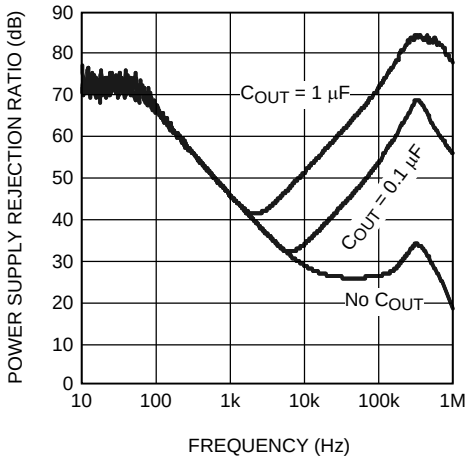

Figure 6.

Copyright © 2006–2013, Texas Instruments Incorporated

Typical Performance Characteristics for 2.5V (continued)

Dropout vs Load to 0.5% Accuracy

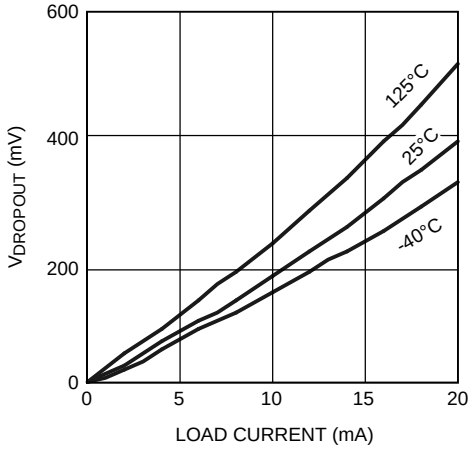

Figure 7.

Typical Long Term Stability

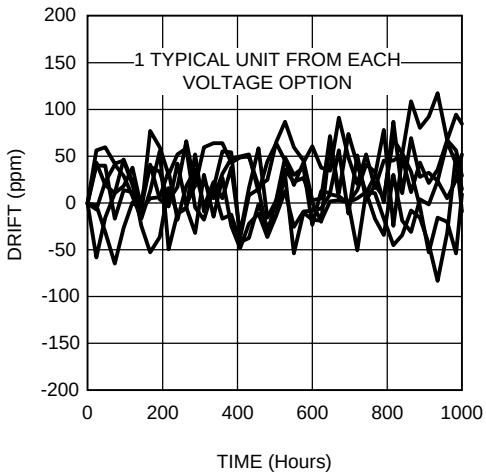

Figure 8.

Supply Current vs Input Voltage

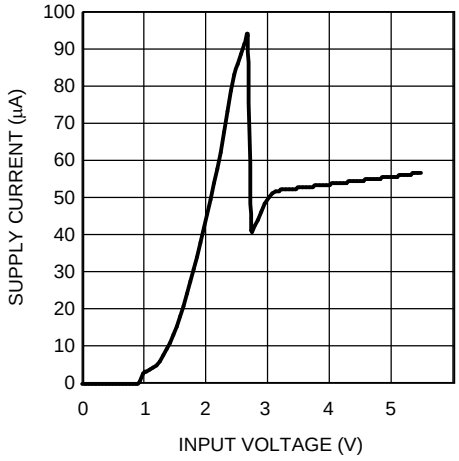

Figure 9.

Shutdown I_Q vs Input Voltage

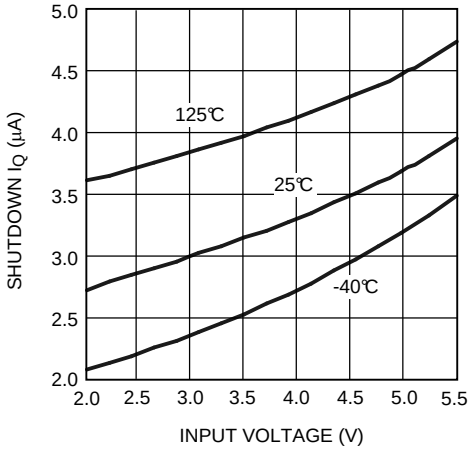

Figure 10.

Ground Current vs Load Current

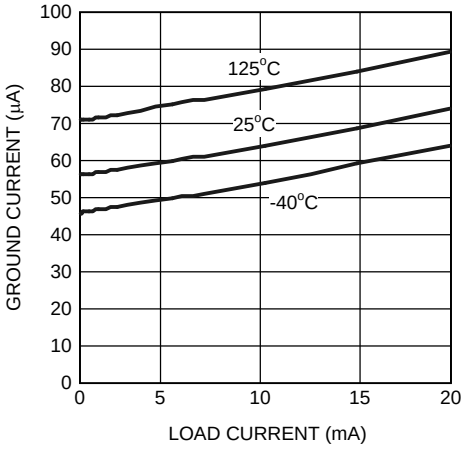

Figure 11.

Line Transient Response V_{IN} = 3V to 5V

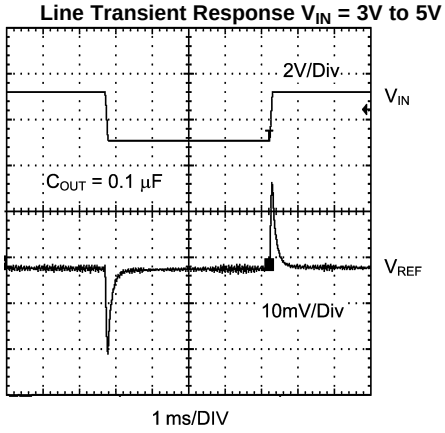

Figure 12.

Copyright © 2006–2013, Texas Instruments Incorporated

Typical Performance Characteristics for 2.5V (continued)

Load Transient Response I_{LOAD} = 0 to 10mA

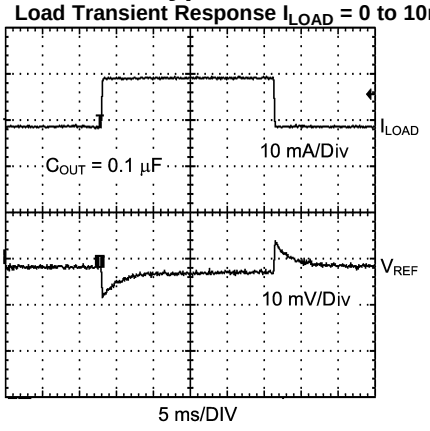

Figure 13.

Short-Circuit Protection and Recovery

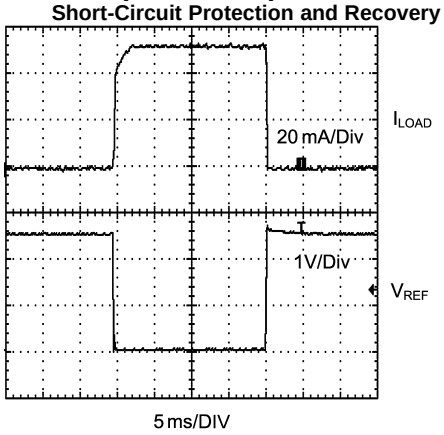

Figure 14.

Start-Up Response

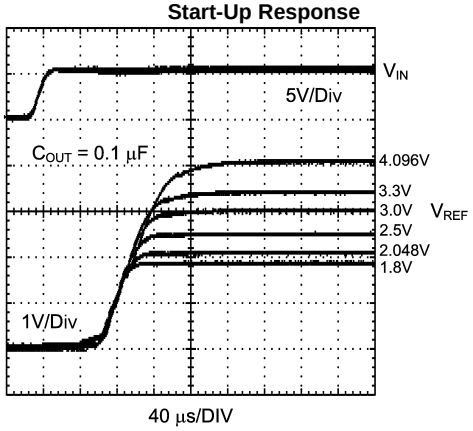

Figure 15.

APPLICATION INFORMATION

THEORY OF OPERATION

The foundation of any voltage reference is the band-gap circuit. While the reference in the LM4128 is developed from the gate-source voltage of transistors in the IC, principles of the band-gap circuit are easily understood using a bipolar example. For a detailed analysis of the bipolar band-gap circuit, see the AN-56 Application Report (SNVA514**)**.

SUPPLY AND ENABLE VOLTAGES

To ensure proper operation, V_{EN} and V_{IN} must be within a specified range. An acceptable range of input voltages is

$$V_{IN} > V_{REF} + 400\ mV\ (I_{LOAD} \leq 10\ mA) \quad (1)$$

The enable pin uses an internal pull-up current source ($I_{PULL_UP} \cong 2\ \mu A$) that may be left floating or triggered by an external source. If the part is not enabled by an external source, it may be connected to V_{IN}. An acceptable range of enable voltages is given by the enable transfer characteristics. See the Electrical Characteristics section and Enable Transfer Characteristics figure for more detail. Note, the part will not operate correctly for $V_{EN} > V_{IN}$.

COMPONENT SELECTION

A small ceramic (X5R or X7R) capacitor on the input must be used to ensure stable operation. The value of C_{IN} must be sized according to the output capacitor value. The value of C_{IN} must satisfy the relationship $C_{IN} \geq C_{OUT}$. When no output capacitor is used, C_{IN} must have a minimum value of 0.1 µF. Noise on the power-supply input may affect the output noise. Larger input capacitor values (typically 4.7 µF to 22 µF) may help reduce noise on the output and significantly reduce overshoot during startup. Use of an additional optional bypass capacitor between the input and ground may help further reduce noise on the output. With an input capacitor, the LM4128 will drive any combination of resistance and capacitance up to V_{REF}/20 mA and 10 µF respectively.

The LM4128 is designed to operate with or without an output capacitor and is stable with capacitive loads up to 10 µF. Connecting a capacitor between the output and ground will significantly improve the load transient response when switching from a light load to a heavy load. The output capacitor should not be made arbitrarily large because it will effect the turn-on time as well as line and load transients.

While a variety of capacitor chemistry types may be used, it is typically advisable to use low esr ceramic capacitors. Such capacitors provide a low impedance to high frequency signals, effectively bypassing them to ground. Bypass capacitors should be mounted close to the part. Mounting bypass capacitors close to the part will help reduce the parasitic trace components thereby improving performance.

SHORT CIRCUITED OUTPUT

The LM4128 features indefinite short circuit protection. This protection limits the output current to 75 mA when the output is shorted to ground.

TURN ON TIME

Turn on time is defined as the time taken for the output voltage to rise to 90% of the preset value. The turn on time depends on the load. The turn on time is typically 33.2 µs when driving a 1µF load and 78.8 µs when driving a 10 µF load. Some users may experience an extended turn on time (up to 10 ms) under brown out conditions and low temperatures (-40°C).

THERMAL HYSTERESIS

Thermal hysteresis is defined as the change in output voltage at 25ºC after some deviation from 25ºC. This is to say that thermal hysteresis is the difference in output voltage between two points in a given temperature profile. An illustrative temperature profile is shown in Figure 16.

Copyright © 2006–2013, Texas Instruments Incorporated

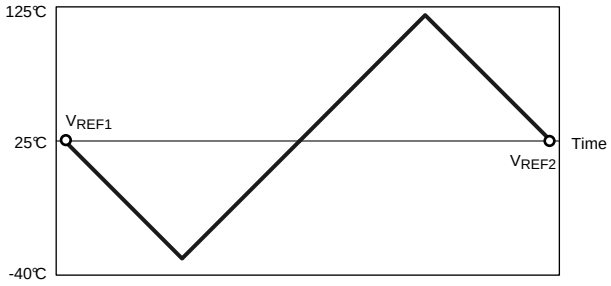

Figure 16. Illustrative Temperature Profile

This may be expressed analytically as the following:

$$V_{HYS} = \frac{|V_{REF1} - V_{REF2}|}{V_{REF}} \times 10^3 \text{ mV} \quad (2)$$

where

- V_{HYS} = Thermal hysteresis expressed in ppm
- V_{REF} = Nominal preset output voltage
- V_{REF1} = V_{REF} before temperature fluctuation
- V_{REF2} = V_{REF} after temperature fluctuation

The LM4128 features a low thermal hysteresis of 190 µV from -40°C to 125°C.

TEMPERATURE COEFFICIENT

Temperature drift is defined as the maximum deviation in output voltage over the operating temperature range. This deviation over temperature may be illustrated as shown in Figure 17.

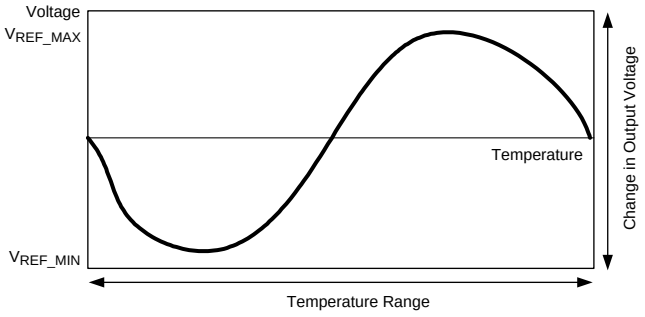

Figure 17. Illustrative Temperature Coefficient Profile

Temperature coefficient may be expressed analytically as the following:

$$T_D = \frac{(V_{REF_MAX} - V_{REF_MIN})}{V_{REF} \times \Delta T} \times 10^6 \text{ ppm}$$

where

- T_D = Temperature drift
- V_{REF} = Nominal preset output voltage
- V_{REF_MIN} = Minimum output voltage over operating temperature range
- V_{REF_MAX} = Maximum output voltage over operating temperature range
- ΔT = Operating temperature range (3)

The LM4128 features a low temperature drift of 75 ppm (max) to 100 ppm (max), depending on the grade, from -40°C to 125°C.

LONG TERM STABILITY

Long-term stability refers to the fluctuation in output voltage over a long period of time (1000 hours). The LM4128 features a typical long-term stability of 50 ppm over 1000 hours. The measurements are made using 5 units of each voltage option, at a nominal input voltage (5V), with no load, at room temperature.

EXPRESSION OF ELECTRICAL CHARACTERISTICS

Electrical characteristics are typically expressed in mV, ppm, or a percentage of the nominal value. Depending on the application, one expression may be more useful than the other. To convert one quantity to the other one may apply the following:

ppm to mV error in output voltage:

$$\frac{V_{REF} \times ppm_{ERROR}}{10^3} = V_{ERROR}$$

where

- V_{REF} is in volts (V) and V_{ERROR} is in milli-volts (mV) (4)

Bit error (1 bit) to voltage error (mV):

$$\frac{V_{REF}}{2^n} \times 10^3 = V_{ERROR}$$

where

- V_{REF} is in volts (V)
- V_{ERROR} is in milli-volts (mV)
- and n is the number of bits (5)

mV to ppm error in output voltage:

$$\frac{V_{ERROR}}{V_{REF}} \times 10^3 = ppm_{ERROR}$$

where

- V_{REF} is in volts (V)
- V_{ERROR} is in milli-volts (mV) (6)

Voltage error (mV) to percentage error (percent):

$$\frac{V_{ERROR}}{V_{REF}} \times 0.1 = Percent_Error$$

where

- V_{REF} is in volts (V)
- V_{ERROR} is in milli-volts (mV) (7)

Copyright © 2006–2013, Texas Instruments Incorporated

PRINTED CIRCUIT BOARD and LAYOUT CONSIDERATIONS

References in SOT packages are generally less prone to PC board mounting than devices in Small Outline (SOIC) packages. To minimize the mechanical stress due to PC board mounting that can cause the output voltage to shift from its initial value, mount the reference on a low flex area of the PC board, such as near the edge or a corner.

The part may be isolated mechanically by cutting a U shape slot on the PCB for mounting the device. This approach also provides some thermal isolation from the rest of the circuit.

Bypass capacitors must be mounted close to the part. Mounting bypass capacitors close to the part will reduce the parasitic trace components thereby improving performance.

Typical Application Circuits

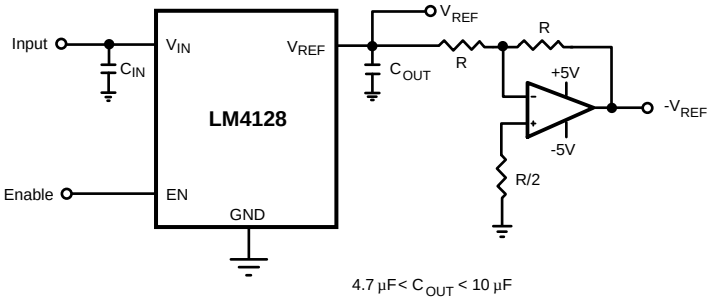

Figure 18. Voltage Reference with Complimentary Output

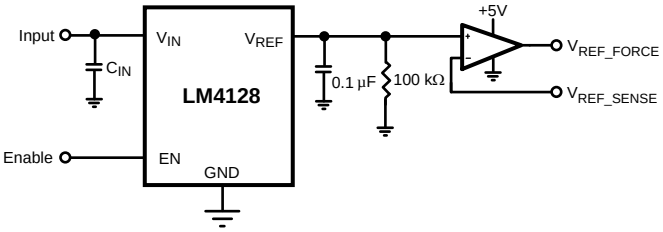

Figure 19. Precision Voltage Reference with Force and Sense Output

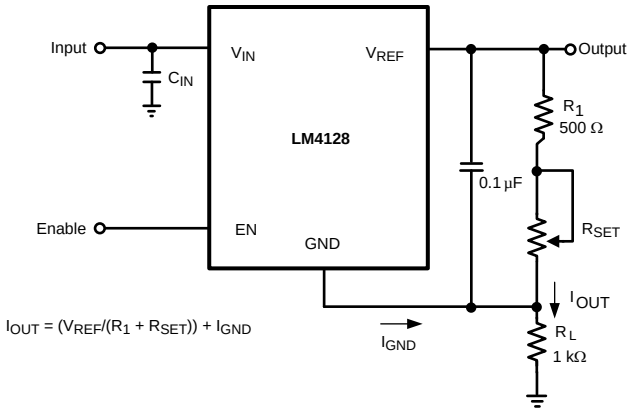

Figure 20. Programmable Current Source

REVISION HISTORY

Changes from Revision D (April 2013) to Revision E	Page
• Changed layout of National Data Sheet to TI format	15

Copyright © 2006–2013, Texas Instruments Incorporated

PACKAGING INFORMATION

Orderable Device	Status (1)	Package Type	Package Drawing	Pins	Package Qty	Eco Plan (2)	Lead finish/ Ball material (6)	MSL Peak Temp (3)	Op Temp (°C)	Device Marking (4/5)	Samples
LM4128AMF-1.8/NOPB	ACTIVE	SOT-23	DBV	5	1000	RoHS & Green	SN	Level-1-260C-UNLIM	-40 to 125	R5AA	Samples
LM4128AMF-2.0/NOPB	ACTIVE	SOT-23	DBV	5	1000	RoHS & Green	SN	Level-1-260C-UNLIM	-40 to 125	R5BA	Samples
LM4128AMF-2.5/NOPB	ACTIVE	SOT-23	DBV	5	1000	RoHS & Green	SN	Level-1-260C-UNLIM	-40 to 125	R5CA	Samples
LM4128AMF-3.0/NOPB	ACTIVE	SOT-23	DBV	5	1000	RoHS & Green	SN	Level-1-260C-UNLIM	-40 to 125	R5DA	Samples
LM4128AMF-3.3/NOPB	ACTIVE	SOT-23	DBV	5	1000	RoHS & Green	SN	Level-1-260C-UNLIM	-40 to 125	R5EA	Samples
LM4128AMF-4.1/NOPB	ACTIVE	SOT-23	DBV	5	1000	RoHS & Green	SN	Level-1-260C-UNLIM	-40 to 125	R5FA	Samples
LM4128AMFX-1.8/NOPB	ACTIVE	SOT-23	DBV	5	3000	RoHS & Green	SN	Level-1-260C-UNLIM	-40 to 125	R5AA	Samples
LM4128AMFX-2.0/NOPB	ACTIVE	SOT-23	DBV	5	3000	RoHS & Green	SN	Level-1-260C-UNLIM	-40 to 125	R5BA	Samples
LM4128AMFX-2.5/NOPB	ACTIVE	SOT-23	DBV	5	3000	RoHS & Green	SN	Level-1-260C-UNLIM	-40 to 125	R5CA	Samples
LM4128AMFX-3.0/NOPB	ACTIVE	SOT-23	DBV	5	3000	RoHS & Green	SN	Level-1-260C-UNLIM	-40 to 125	R5DA	Samples
LM4128AMFX-3.3/NOPB	ACTIVE	SOT-23	DBV	5	3000	RoHS & Green	SN	Level-1-260C-UNLIM	-40 to 125	R5EA	Samples
LM4128AMFX-4.1/NOPB	ACTIVE	SOT-23	DBV	5	3000	RoHS & Green	SN	Level-1-260C-UNLIM		R5FA	Samples
LM4128AQ1MF1.8/NOPB	ACTIVE	SOT-23	DBV	5	1000	RoHS & Green	SN	Level-1-260C-UNLIM	-40 to 125	R6AA	Samples
LM4128AQ1MF2.0/NOPB	ACTIVE	SOT-23	DBV	5	1000	RoHS & Green	SN	Level-1-260C-UNLIM	-40 to 125	R6BA	Samples
LM4128AQ1MF2.5/NOPB	ACTIVE	SOT-23	DBV	5	1000	RoHS & Green	SN	Level-1-260C-UNLIM	-40 to 125	R6CA	Samples
LM4128AQ1MF3.0/NOPB	ACTIVE	SOT-23	DBV	5	1000	RoHS & Green	SN	Level-1-260C-UNLIM	-40 to 125	R6DA	Samples
LM4128AQ1MF3.3/NOPB	ACTIVE	SOT-23	DBV	5	1000	RoHS & Green	SN	Level-1-260C-UNLIM	-40 to 125	R6EA	Samples
LM4128AQ1MF4.1/NOPB	ACTIVE	SOT-23	DBV	5	1000	RoHS & Green	SN	Level-1-260C-UNLIM	-40 to 125	R6FA	Samples
LM4128AQ1MFX1.8/NOPB	ACTIVE	SOT-23	DBV	5	3000	RoHS & Green	SN	Level-1-260C-UNLIM	-40 to 125	R6AA	Samples
LM4128AQ1MFX2.0/NOPB	ACTIVE	SOT-23	DBV	5	3000	RoHS & Green	SN	Level-1-260C-UNLIM	-40 to 125	R6BA	Samples

Orderable Device	Status (1)	Package Type	Package Drawing	Pins	Package Qty	Eco Plan (2)	Lead finish/ Ball material (6)	MSL Peak Temp (3)	Op Temp (°C)	Device Marking (4/5)	Samples
LM4128AQ1MFX2.5/NOPB	ACTIVE	SOT-23	DBV	5	3000	RoHS & Green	SN	Level-1-260C-UNLIM	-40 to 125	R6CA	Samples
LM4128AQ1MFX3.0/NOPB	ACTIVE	SOT-23	DBV	5	3000	RoHS & Green	SN	Level-1-260C-UNLIM	-40 to 125	R6DA	Samples
LM4128AQ1MFX3.3/NOPB	ACTIVE	SOT-23	DBV	5	3000	RoHS & Green	SN	Level-1-260C-UNLIM	-40 to 125	R6EA	Samples
LM4128AQ1MFX4.1/NOPB	ACTIVE	SOT-23	DBV	5	3000	RoHS & Green	SN	Level-1-260C-UNLIM	-40 to 125	R6FA	Samples
LM4128BMF-1.8/NOPB	ACTIVE	SOT-23	DBV	5	1000	RoHS & Green	SN	Level-1-260C-UNLIM	-40 to 125	R5AB	Samples
LM4128BMF-2.0/NOPB	ACTIVE	SOT-23	DBV	5	1000	RoHS & Green	SN	Level-1-260C-UNLIM	-40 to 125	R5BB	Samples
LM4128BMF-2.5	NRND	SOT-23	DBV	5	1000	Non-RoHS & Green	Call TI	Level-1-260C-UNLIM	-40 to 125	R5CB	
LM4128BMF-2.5/NOPB	ACTIVE	SOT-23	DBV	5	1000	RoHS & Green	SN	Level-1-260C-UNLIM	-40 to 125	R5CB	Samples
LM4128BMF-3.0/NOPB	ACTIVE	SOT-23	DBV	5	1000	RoHS & Green	SN	Level-1-260C-UNLIM	-40 to 125	R5DB	Samples
LM4128BMF-3.3/NOPB	ACTIVE	SOT-23	DBV	5	1000	RoHS & Green	SN	Level-1-260C-UNLIM	-40 to 125	R5EB	Samples
LM4128BMF-4.1/NOPB	ACTIVE	SOT-23	DBV	5	1000	RoHS & Green	SN	Level-1-260C-UNLIM	-40 to 125	R5FB	Samples
LM4128BMFX-1.8/NOPB	ACTIVE	SOT-23	DBV	5	3000	RoHS & Green	SN	Level-1-260C-UNLIM	-40 to 125	R5AB	Samples
LM4128BMFX-2.0/NOPB	ACTIVE	SOT-23	DBV	5	3000	RoHS & Green	SN	Level-1-260C-UNLIM	-40 to 125	R5BB	Samples
LM4128BMFX-2.5/NOPB	ACTIVE	SOT-23	DBV	5	3000	RoHS & Green	SN	Level-1-260C-UNLIM	-40 to 125	R5CB	Samples
LM4128BMFX-3.0/NOPB	ACTIVE	SOT-23	DBV	5	3000	RoHS & Green	SN	Level-1-260C-UNLIM	-40 to 125	R5DB	Samples
LM4128BMFX-3.3/NOPB	ACTIVE	SOT-23	DBV	5	3000	RoHS & Green	SN	Level-1-260C-UNLIM	-40 to 125	R5EB	Samples
LM4128BMFX-4.1/NOPB	ACTIVE	SOT-23	DBV	5	3000	RoHS & Green	SN	Level-1-260C-UNLIM	-40 to 125	R5FB	Samples
LM4128BQ1MF1.8/NOPB	ACTIVE	SOT-23	DBV	5	1000	RoHS & Green	SN	Level-1-260C-UNLIM	-40 to 125	R6AB	Samples
LM4128BQ1MF2.0/NOPB	ACTIVE	SOT-23	DBV	5	1000	RoHS & Green	SN	Level-1-260C-UNLIM	-40 to 125	R6BB	Samples
LM4128BQ1MF2.5/NOPB	ACTIVE	SOT-23	DBV	5	1000	RoHS & Green	SN	Level-1-260C-UNLIM	-40 to 125	R6CB	Samples
LM4128BQ1MF3.0/NOPB	ACTIVE	SOT-23	DBV	5	1000	RoHS & Green	SN	Level-1-260C-UNLIM	-40 to 125	R6DB	Samples

Orderable Device	Status (1)	Package Type	Package Drawing	Pins	Package Qty	Eco Plan (2)	Lead finish/ Ball material (6)	MSL Peak Temp (3)	Op Temp (°C)	Device Marking (4/5)	Samples
LM4128BQ1MF3.3/NOPB	ACTIVE	SOT-23	DBV	5	1000	RoHS & Green	SN	Level-1-260C-UNLIM	-40 to 125	R6EB	Samples
LM4128BQ1MF4.1/NOPB	ACTIVE	SOT-23	DBV	5	1000	RoHS & Green	SN	Level-1-260C-UNLIM	-40 to 125	R6FB	Samples
LM4128BQ1MFX1.8/NOPB	ACTIVE	SOT-23	DBV	5	3000	RoHS & Green	SN	Level-1-260C-UNLIM	-40 to 125	R6AB	Samples
LM4128BQ1MFX2.0/NOPB	ACTIVE	SOT-23	DBV	5	3000	RoHS & Green	SN	Level-1-260C-UNLIM	-40 to 125	R6BB	Samples
LM4128BQ1MFX2.5/NOPB	ACTIVE	SOT-23	DBV	5	3000	RoHS & Green	SN	Level-1-260C-UNLIM	-40 to 125	R6CB	Samples
LM4128BQ1MFX3.0/NOPB	ACTIVE	SOT-23	DBV	5	3000	RoHS & Green	SN	Level-1-260C-UNLIM	-40 to 125	R6DB	Samples
LM4128BQ1MFX3.3/NOPB	ACTIVE	SOT-23	DBV	5	3000	RoHS & Green	SN	Level-1-260C-UNLIM	-40 to 125	R6EB	Samples
LM4128BQ1MFX4.1/NOPB	ACTIVE	SOT-23	DBV	5	3000	RoHS & Green	SN	Level-1-260C-UNLIM	-40 to 125	R6FB	Samples
LM4128CMF-1.8/NOPB	ACTIVE	SOT-23	DBV	5	1000	RoHS & Green	SN	Level-1-260C-UNLIM	-40 to 125	R5AC	Samples
LM4128CMF-2.0/NOPB	ACTIVE	SOT-23	DBV	5	1000	RoHS & Green	SN	Level-1-260C-UNLIM	-40 to 125	R5BC	Samples
LM4128CMF-2.5/NOPB	ACTIVE	SOT-23	DBV	5	1000	RoHS & Green	SN	Level-1-260C-UNLIM	-40 to 125	R5CC	Samples
LM4128CMF-3.0/NOPB	ACTIVE	SOT-23	DBV	5	1000	RoHS & Green	SN	Level-1-260C-UNLIM	-40 to 125	R5DC	Samples
LM4128CMF-3.3/NOPB	ACTIVE	SOT-23	DBV	5	1000	RoHS & Green	SN	Level-1-260C-UNLIM	-40 to 125	R5EC	Samples
LM4128CMF-4.1/NOPB	ACTIVE	SOT-23	DBV	5	1000	RoHS & Green	SN	Level-1-260C-UNLIM	-40 to 125	R5FC	Samples
LM4128CMFX-1.8/NOPB	ACTIVE	SOT-23	DBV	5	3000	RoHS & Green	SN	Level-1-260C-UNLIM	-40 to 125	R5AC	Samples
LM4128CMFX-2.0/NOPB	ACTIVE	SOT-23	DBV	5	3000	RoHS & Green	SN	Level-1-260C-UNLIM	-40 to 125	R5BC	Samples
LM4128CMFX-2.5/NOPB	ACTIVE	SOT-23	DBV	5	3000	RoHS & Green	SN	Level-1-260C-UNLIM	-40 to 125	R5CC	Samples
LM4128CMFX-3.0/NOPB	ACTIVE	SOT-23	DBV	5	3000	RoHS & Green	SN	Level-1-260C-UNLIM	-40 to 125	R5DC	Samples
LM4128CMFX-3.3/NOPB	ACTIVE	SOT-23	DBV	5	3000	RoHS & Green	SN	Level-1-260C-UNLIM	-40 to 125	R5EC	Samples
LM4128CMFX-4.1/NOPB	ACTIVE	SOT-23	DBV	5	3000	RoHS & Green	SN	Level-1-260C-UNLIM	-40 to 125	R5FC	Samples
LM4128CQ1MF1.8/NOPB	ACTIVE	SOT-23	DBV	5	1000	RoHS & Green	SN	Level-1-260C-UNLIM	-40 to 125	R6AC	Samples

Orderable Device	Status (1)	Package Type	Package Drawing	Pins	Package Qty	Eco Plan (2)	Lead finish/ Ball material (6)	MSL Peak Temp (3)	Op Temp (°C)	Device Marking (4/5)	Samples
LM4128CQ1MF2.0/NOPB	ACTIVE	SOT-23	DBV	5	1000	RoHS & Green	SN	Level-1-260C-UNLIM	-40 to 125	R6BC	Samples
LM4128CQ1MF2.5/NOPB	ACTIVE	SOT-23	DBV	5	1000	RoHS & Green	SN	Level-1-260C-UNLIM	-40 to 125	R6CC	Samples
LM4128CQ1MF3.0/NOPB	ACTIVE	SOT-23	DBV	5	1000	RoHS & Green	SN	Level-1-260C-UNLIM	-40 to 125	R6DC	Samples
LM4128CQ1MF3.3/NOPB	ACTIVE	SOT-23	DBV	5	1000	RoHS & Green	SN	Level-1-260C-UNLIM	-40 to 125	R6EC	Samples
LM4128CQ1MF4.1/NOPB	ACTIVE	SOT-23	DBV	5	1000	RoHS & Green	SN	Level-1-260C-UNLIM	-40 to 125	R6FC	Samples
LM4128CQ1MFX1.8/NOPB	ACTIVE	SOT-23	DBV	5	3000	RoHS & Green	SN	Level-1-260C-UNLIM	-40 to 125	R6AC	Samples
LM4128CQ1MFX2.0/NOPB	ACTIVE	SOT-23	DBV	5	3000	RoHS & Green	SN	Level-1-260C-UNLIM	-40 to 125	R6BC	Samples
LM4128CQ1MFX2.5/NOPB	ACTIVE	SOT-23	DBV	5	3000	RoHS & Green	SN	Level-1-260C-UNLIM	-40 to 125	R6CC	Samples
LM4128CQ1MFX3.0/NOPB	ACTIVE	SOT-23	DBV	5	3000	RoHS & Green	SN	Level-1-260C-UNLIM	-40 to 125	R6DC	Samples
LM4128CQ1MFX3.3/NOPB	ACTIVE	SOT-23	DBV	5	3000	RoHS & Green	SN	Level-1-260C-UNLIM	-40 to 125	R6EC	Samples
LM4128CQ1MFX4.1/NOPB	ACTIVE	SOT-23	DBV	5	3000	RoHS & Green	SN	Level-1-260C-UNLIM	-40 to 125	R6FC	Samples
LM4128DMF-1.8/NOPB	ACTIVE	SOT-23	DBV	5	1000	RoHS & Green	SN	Level-1-260C-UNLIM	-40 to 125	R5AD	Samples
LM4128DMF-2.0/NOPB	ACTIVE	SOT-23	DBV	5	1000	RoHS & Green	SN	Level-1-260C-UNLIM	-40 to 125	R5BD	Samples
LM4128DMF-2.5/NOPB	ACTIVE	SOT-23	DBV	5	1000	RoHS & Green	SN	Level-1-260C-UNLIM	-40 to 125	R5CD	Samples
LM4128DMF-3.0/NOPB	ACTIVE	SOT-23	DBV	5	1000	RoHS & Green	SN	Level-1-260C-UNLIM	-40 to 125	R5DD	Samples
LM4128DMF-3.3/NOPB	ACTIVE	SOT-23	DBV	5	1000	RoHS & Green	SN	Level-1-260C-UNLIM	-40 to 125	R5ED	Samples
LM4128DMF-4.1/NOPB	ACTIVE	SOT-23	DBV	5	1000	RoHS & Green	SN	Level-1-260C-UNLIM	-40 to 125	R5FD	Samples
LM4128DMFX-1.8/NOPB	ACTIVE	SOT-23	DBV	5	3000	RoHS & Green	SN	Level-1-260C-UNLIM	-40 to 125	R5AD	Samples
LM4128DMFX-2.0/NOPB	ACTIVE	SOT-23	DBV	5	3000	RoHS & Green	SN	Level-1-260C-UNLIM	-40 to 125	R5BD	Samples
LM4128DMFX-3.0/NOPB	ACTIVE	SOT-23	DBV	5	3000	RoHS & Green	SN	Level-1-260C-UNLIM	-40 to 125	R5DD	Samples
LM4128DMFX-3.3/NOPB	ACTIVE	SOT-23	DBV	5	3000	RoHS & Green	SN	Level-1-260C-UNLIM	-40 to 125	R5ED	Samples

Orderable Device	Status (1)	Package Type	Package Drawing	Pins	Package Qty	Eco Plan (2)	Lead finish/ Ball material (6)	MSL Peak Temp (3)	Op Temp (°C)	Device Marking (4/5)	Samples
LM4128DMFX-4.1/NOPB	ACTIVE	SOT-23	DBV	5	3000	RoHS & Green	SN	Level-1-260C-UNLIM	-40 to 125	R5FD	Samples
LM4128DQ1MF1.8/NOPB	ACTIVE	SOT-23	DBV	5	1000	RoHS & Green	SN	Level-1-260C-UNLIM	-40 to 125	R6AD	Samples
LM4128DQ1MF2.0/NOPB	ACTIVE	SOT-23	DBV	5	1000	RoHS & Green	SN	Level-1-260C-UNLIM	-40 to 125	R6BD	Samples
LM4128DQ1MF2.5/NOPB	ACTIVE	SOT-23	DBV	5	1000	RoHS & Green	SN	Level-1-260C-UNLIM	-40 to 125	R6CD	Samples
LM4128DQ1MF3.0/NOPB	ACTIVE	SOT-23	DBV	5	1000	RoHS & Green	SN	Level-1-260C-UNLIM	-40 to 125	R6DD	Samples
LM4128DQ1MF3.3/NOPB	ACTIVE	SOT-23	DBV	5	1000	RoHS & Green	SN	Level-1-260C-UNLIM	-40 to 125	R6ED	Samples
LM4128DQ1MF4.1/NOPB	ACTIVE	SOT-23	DBV	5	1000	RoHS & Green	SN	Level-1-260C-UNLIM	-40 to 125	R6FD	Samples
LM4128DQ1MFX1.8/NOPB	ACTIVE	SOT-23	DBV	5	3000	RoHS & Green	SN	Level-1-260C-UNLIM	-40 to 125	R6AD	Samples
LM4128DQ1MFX2.0/NOPB	ACTIVE	SOT-23	DBV	5	3000	RoHS & Green	SN	Level-1-260C-UNLIM	-40 to 125	R6BD	Samples
LM4128DQ1MFX2.5/NOPB	ACTIVE	SOT-23	DBV	5	3000	RoHS & Green	SN	Level-1-260C-UNLIM	-40 to 125	R6CD	Samples
LM4128DQ1MFX3.0/NOPB	ACTIVE	SOT-23	DBV	5	3000	RoHS & Green	SN	Level-1-260C-UNLIM	-40 to 125	R6DD	Samples
LM4128DQ1MFX3.3/NOPB	ACTIVE	SOT-23	DBV	5	3000	RoHS & Green	SN	Level-1-260C-UNLIM	-40 to 125	R6ED	Samples
LM4128DQ1MFX4.1/NOPB	ACTIVE	SOT-23	DBV	5	3000	RoHS & Green	SN	Level-1-260C-UNLIM	-40 to 125	R6FD	Samples

(1) The marketing status values are defined as follows:
ACTIVE: Product device recommended for new designs.
LIFEBUY: TI has announced that the device will be discontinued, and a lifetime-buy period is in effect.
NRND: Not recommended for new designs. Device is in production to support existing customers, but TI does not recommend using this part in a new design.
PREVIEW: Device has been announced but is not in production. Samples may or may not be available.
OBSOLETE: TI has discontinued the production of the device.

(2) **RoHS:** TI defines "RoHS" to mean semiconductor products that are compliant with the current EU RoHS requirements for all 10 RoHS substances, including the requirement that RoHS substance do not exceed 0.1% by weight in homogeneous materials. Where designed to be soldered at high temperatures, "RoHS" products are suitable for use in specified lead-free processes. TI may reference these types of products as "Pb-Free".
RoHS Exempt: TI defines "RoHS Exempt" to mean products that contain lead but are compliant with EU RoHS pursuant to a specific EU RoHS exemption.
Green: TI defines "Green" to mean the content of Chlorine (Cl) and Bromine (Br) based flame retardants meet JS709B low halogen requirements of <=1000ppm threshold. Antimony trioxide based flame retardants must also meet the <=1000ppm threshold requirement.

(3) MSL, Peak Temp. - The Moisture Sensitivity Level rating according to the JEDEC industry standard classifications, and peak solder temperature.

(4) There may be additional marking, which relates to the logo, the lot trace code information, or the environmental category on the device.

(5) Multiple Device Markings will be inside parentheses. Only one Device Marking contained in parentheses and separated by a "~" will appear on a device. If a line is indented then it is a continuation of the previous line and the two combined represent the entire Device Marking for that device.

(6) Lead finish/Ball material - Orderable Devices may have multiple material finish options. Finish options are separated by a vertical ruled line. Lead finish/Ball material values may wrap to two lines if the finish value exceeds the maximum column width.

Important Information and Disclaimer: The information provided on this page represents TI's knowledge and belief as of the date that it is provided. TI bases its knowledge and belief on information provided by third parties, and makes no representation or warranty as to the accuracy of such information. Efforts are underway to better integrate information from third parties. TI has taken and continues to take reasonable steps to provide representative and accurate information but may not have conducted destructive testing or chemical analysis on incoming materials and chemicals. TI and TI suppliers consider certain information to be proprietary, and thus CAS numbers and other limited information may not be available for release.

In no event shall TI's liability arising out of such information exceed the total purchase price of the TI part(s) at issue in this document sold by TI to Customer on an annual basis.

OTHER QUALIFIED VERSIONS OF LM4128, LM4128-Q1 :

- Catalog : LM4128
- Automotive : LM4128-Q1

NOTE: Qualified Version Definitions:

- Catalog - TI's standard catalog product
- Automotive - Q100 devices qualified for high-reliability automotive applications targeting zero defects

TAPE AND REEL INFORMATION

REEL DIMENSIONS

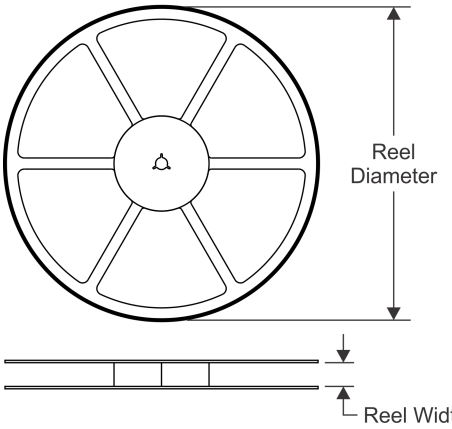

TAPE DIMENSIONS

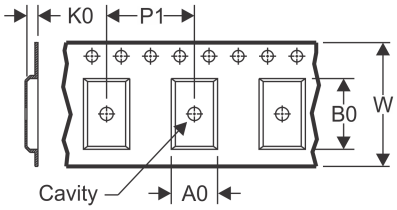

A0	Dimension designed to accommodate the component width
B0	Dimension designed to accommodate the component length
K0	Dimension designed to accommodate the component thickness
W	Overall width of the carrier tape
P1	Pitch between successive cavity centers

QUADRANT ASSIGNMENTS FOR PIN 1 ORIENTATION IN TAPE

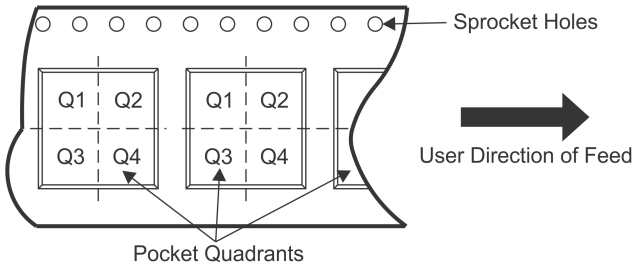

*All dimensions are nominal

Device	Package Type	Package Drawing	Pins	SPQ	Reel Diameter (mm)	Reel Width W1 (mm)	A0 (mm)	B0 (mm)	K0 (mm)	P1 (mm)	W (mm)	Pin1 Quadrant
LM4128AMF-1.8/NOPB	SOT-23	DBV	5	1000	178.0	8.4	3.2	3.2	1.4	4.0	8.0	Q3
LM4128AMF-2.0/NOPB	SOT-23	DBV	5	1000	178.0	8.4	3.2	3.2	1.4	4.0	8.0	Q3
LM4128AMF-2.5/NOPB	SOT-23	DBV	5	1000	178.0	8.4	3.2	3.2	1.4	4.0	8.0	Q3
LM4128AMF-3.0/NOPB	SOT-23	DBV	5	1000	178.0	8.4	3.2	3.2	1.4	4.0	8.0	Q3
LM4128AMF-3.3/NOPB	SOT-23	DBV	5	1000	178.0	8.4	3.2	3.2	1.4	4.0	8.0	Q3
LM4128AMF-4.1/NOPB	SOT-23	DBV	5	1000	178.0	8.4	3.2	3.2	1.4	4.0	8.0	Q3
LM4128AMFX-1.8/NOPB	SOT-23	DBV	5	3000	178.0	8.4	3.2	3.2	1.4	4.0	8.0	Q3
LM4128AMFX-2.0/NOPB	SOT-23	DBV	5	3000	178.0	8.4	3.2	3.2	1.4	4.0	8.0	Q3
LM4128AMFX-2.5/NOPB	SOT-23	DBV	5	3000	178.0	8.4	3.2	3.2	1.4	4.0	8.0	Q3
LM4128AMFX-3.0/NOPB	SOT-23	DBV	5	3000	178.0	8.4	3.2	3.2	1.4	4.0	8.0	Q3
LM4128AMFX-3.3/NOPB	SOT-23	DBV	5	3000	178.0	8.4	3.2	3.2	1.4	4.0	8.0	Q3
LM4128AMFX-4.1/NOPB	SOT-23	DBV	5	3000	178.0	8.4	3.2	3.2	1.4	4.0	8.0	Q3
LM4128AQ1MF1.8/NOPB	SOT-23	DBV	5	1000	178.0	8.4	3.2	3.2	1.4	4.0	8.0	Q3
LM4128AQ1MF2.0/NOPB	SOT-23	DBV	5	1000	178.0	8.4	3.2	3.2	1.4	4.0	8.0	Q3
LM4128AQ1MF2.5/NOPB	SOT-23	DBV	5	1000	178.0	8.4	3.2	3.2	1.4	4.0	8.0	Q3
LM4128AQ1MF3.0/NOPB	SOT-23	DBV	5	1000	178.0	8.4	3.2	3.2	1.4	4.0	8.0	Q3
LM4128AQ1MF3.3/NOPB	SOT-23	DBV	5	1000	178.0	8.4	3.2	3.2	1.4	4.0	8.0	Q3
LM4128AQ1MF4.1/NOPB	SOT-23	DBV	5	1000	178.0	8.4	3.2	3.2	1.4	4.0	8.0	Q3

Device	Package Type	Package Drawing	Pins	SPQ	Reel Diameter (mm)	Reel Width W1 (mm)	A0 (mm)	B0 (mm)	K0 (mm)	P1 (mm)	W (mm)	Pin1 Quadrant
LM4128AQ1MFX1.8/NOPB	SOT-23	DBV	5	3000	178.0	8.4	3.2	3.2	1.4	4.0	8.0	Q3
LM4128AQ1MFX2.0/NOPB	SOT-23	DBV	5	3000	178.0	8.4	3.2	3.2	1.4	4.0	8.0	Q3
LM4128AQ1MFX2.5/NOPB	SOT-23	DBV	5	3000	178.0	8.4	3.2	3.2	1.4	4.0	8.0	Q3
LM4128AQ1MFX3.0/NOPB	SOT-23	DBV	5	3000	178.0	8.4	3.2	3.2	1.4	4.0	8.0	Q3
LM4128AQ1MFX3.3/NOPB	SOT-23	DBV	5	3000	178.0	8.4	3.2	3.2	1.4	4.0	8.0	Q3
LM4128AQ1MFX4.1/NOPB	SOT-23	DBV	5	3000	178.0	8.4	3.2	3.2	1.4	4.0	8.0	Q3
LM4128BMF-1.8/NOPB	SOT-23	DBV	5	1000	178.0	8.4	3.2	3.2	1.4	4.0	8.0	Q3
LM4128BMF-2.0/NOPB	SOT-23	DBV	5	1000	178.0	8.4	3.2	3.2	1.4	4.0	8.0	Q3
LM4128BMF-2.5	SOT-23	DBV	5	1000	178.0	8.4	3.2	3.2	1.4	4.0	8.0	Q3
LM4128BMF-2.5/NOPB	SOT-23	DBV	5	1000	178.0	8.4	3.2	3.2	1.4	4.0	8.0	Q3
LM4128BMF-3.0/NOPB	SOT-23	DBV	5	1000	178.0	8.4	3.2	3.2	1.4	4.0	8.0	Q3
LM4128BMF-3.3/NOPB	SOT-23	DBV	5	1000	178.0	8.4	3.2	3.2	1.4	4.0	8.0	Q3
LM4128BMF-4.1/NOPB	SOT-23	DBV	5	1000	178.0	8.4	3.2	3.2	1.4	4.0	8.0	Q3
LM4128BMFX-1.8/NOPB	SOT-23	DBV	5	3000	178.0	8.4	3.2	3.2	1.4	4.0	8.0	Q3
LM4128BMFX-2.0/NOPB	SOT-23	DBV	5	3000	178.0	8.4	3.2	3.2	1.4	4.0	8.0	Q3
LM4128BMFX-2.5/NOPB	SOT-23	DBV	5	3000	178.0	8.4	3.2	3.2	1.4	4.0	8.0	Q3
LM4128BMFX-3.0/NOPB	SOT-23	DBV	5	3000	178.0	8.4	3.2	3.2	1.4	4.0	8.0	Q3
LM4128BMFX-3.3/NOPB	SOT-23	DBV	5	3000	178.0	8.4	3.2	3.2	1.4	4.0	8.0	Q3
LM4128BMFX-4.1/NOPB	SOT-23	DBV	5	3000	178.0	8.4	3.2	3.2	1.4	4.0	8.0	Q3
LM4128BQ1MF1.8/NOPB	SOT-23	DBV	5	1000	178.0	8.4	3.2	3.2	1.4	4.0	8.0	Q3
LM4128BQ1MF2.0/NOPB	SOT-23	DBV	5	1000	178.0	8.4	3.2	3.2	1.4	4.0	8.0	Q3
LM4128BQ1MF2.5/NOPB	SOT-23	DBV	5	1000	178.0	8.4	3.2	3.2	1.4	4.0	8.0	Q3
LM4128BQ1MF3.0/NOPB	SOT-23	DBV	5	1000	178.0	8.4	3.2	3.2	1.4	4.0	8.0	Q3
LM4128BQ1MF3.3/NOPB	SOT-23	DBV	5	1000	178.0	8.4	3.2	3.2	1.4	4.0	8.0	Q3
LM4128BQ1MF4.1/NOPB	SOT-23	DBV	5	1000	178.0	8.4	3.2	3.2	1.4	4.0	8.0	Q3
LM4128BQ1MFX1.8/NOPB	SOT-23	DBV	5	3000	178.0	8.4	3.2	3.2	1.4	4.0	8.0	Q3
LM4128BQ1MFX2.0/NOPB	SOT-23	DBV	5	3000	178.0	8.4	3.2	3.2	1.4	4.0	8.0	Q3
LM4128BQ1MFX2.5/NOPB	SOT-23	DBV	5	3000	178.0	8.4	3.2	3.2	1.4	4.0	8.0	Q3
LM4128BQ1MFX3.0/NOPB	SOT-23	DBV	5	3000	178.0	8.4	3.2	3.2	1.4	4.0	8.0	Q3
LM4128BQ1MFX3.3/NOPB	SOT-23	DBV	5	3000	178.0	8.4	3.2	3.2	1.4	4.0	8.0	Q3
LM4128BQ1MFX4.1/NOPB	SOT-23	DBV	5	3000	178.0	8.4	3.2	3.2	1.4	4.0	8.0	Q3
LM4128CMF-1.8/NOPB	SOT-23	DBV	5	1000	178.0	8.4	3.2	3.2	1.4	4.0	8.0	Q3
LM4128CMF-2.0/NOPB	SOT-23	DBV	5	1000	178.0	8.4	3.2	3.2	1.4	4.0	8.0	Q3
LM4128CMF-2.5/NOPB	SOT-23	DBV	5	1000	178.0	8.4	3.2	3.2	1.4	4.0	8.0	Q3

Device	Package Type	Package Drawing	Pins	SPQ	Reel Diameter (mm)	Reel Width W1 (mm)	A0 (mm)	B0 (mm)	K0 (mm)	P1 (mm)	W (mm)	Pin1 Quadrant
LM4128CMF-3.0/NOPB	SOT-23	DBV	5	1000	178.0	8.4	3.2	3.2	1.4	4.0	8.0	Q3
LM4128CMF-3.3/NOPB	SOT-23	DBV	5	1000	178.0	8.4	3.2	3.2	1.4	4.0	8.0	Q3
LM4128CMF-4.1/NOPB	SOT-23	DBV	5	1000	178.0	8.4	3.2	3.2	1.4	4.0	8.0	Q3
LM4128CMFX-1.8/NOPB	SOT-23	DBV	5	3000	178.0	8.4	3.2	3.2	1.4	4.0	8.0	Q3
LM4128CMFX-2.0/NOPB	SOT-23	DBV	5	3000	178.0	8.4	3.2	3.2	1.4	4.0	8.0	Q3
LM4128CMFX-2.5/NOPB	SOT-23	DBV	5	3000	178.0	8.4	3.2	3.2	1.4	4.0	8.0	Q3
LM4128CMFX-3.0/NOPB	SOT-23	DBV	5	3000	178.0	8.4	3.2	3.2	1.4	4.0	8.0	Q3
LM4128CMFX-3.3/NOPB	SOT-23	DBV	5	3000	178.0	8.4	3.2	3.2	1.4	4.0	8.0	Q3
LM4128CMFX-4.1/NOPB	SOT-23	DBV	5	3000	178.0	8.4	3.2	3.2	1.4	4.0	8.0	Q3
LM4128CQ1MF1.8/NOPB	SOT-23	DBV	5	1000	178.0	8.4	3.2	3.2	1.4	4.0	8.0	Q3
LM4128CQ1MF2.0/NOPB	SOT-23	DBV	5	1000	178.0	8.4	3.2	3.2	1.4	4.0	8.0	Q3
LM4128CQ1MF2.5/NOPB	SOT-23	DBV	5	1000	178.0	8.4	3.2	3.2	1.4	4.0	8.0	Q3
LM4128CQ1MF3.0/NOPB	SOT-23	DBV	5	1000	178.0	8.4	3.2	3.2	1.4	4.0	8.0	Q3
LM4128CQ1MF3.3/NOPB	SOT-23	DBV	5	1000	178.0	8.4	3.2	3.2	1.4	4.0	8.0	Q3
LM4128CQ1MF4.1/NOPB	SOT-23	DBV	5	1000	178.0	8.4	3.2	3.2	1.4	4.0	8.0	Q3
LM4128CQ1MFX1.8/NOPB	SOT-23	DBV	5	3000	178.0	8.4	3.2	3.2	1.4	4.0	8.0	Q3
LM4128CQ1MFX2.0/NOPB	SOT-23	DBV	5	3000	178.0	8.4	3.2	3.2	1.4	4.0	8.0	Q3
LM4128CQ1MFX2.5/NOPB	SOT-23	DBV	5	3000	178.0	8.4	3.2	3.2	1.4	4.0	8.0	Q3
LM4128CQ1MFX3.0/NOPB	SOT-23	DBV	5	3000	178.0	8.4	3.2	3.2	1.4	4.0	8.0	Q3
LM4128CQ1MFX3.3/NOPB	SOT-23	DBV	5	3000	178.0	8.4	3.2	3.2	1.4	4.0	8.0	Q3
LM4128CQ1MFX4.1/NOPB	SOT-23	DBV	5	3000	178.0	8.4	3.2	3.2	1.4	4.0	8.0	Q3
LM4128DMF-1.8/NOPB	SOT-23	DBV	5	1000	178.0	8.4	3.2	3.2	1.4	4.0	8.0	Q3
LM4128DMF-2.0/NOPB	SOT-23	DBV	5	1000	178.0	8.4	3.2	3.2	1.4	4.0	8.0	Q3
LM4128DMF-2.5/NOPB	SOT-23	DBV	5	1000	178.0	8.4	3.2	3.2	1.4	4.0	8.0	Q3
LM4128DMF-3.0/NOPB	SOT-23	DBV	5	1000	178.0	8.4	3.2	3.2	1.4	4.0	8.0	Q3
LM4128DMF-3.3/NOPB	SOT-23	DBV	5	1000	178.0	8.4	3.2	3.2	1.4	4.0	8.0	Q3
LM4128DMF-4.1/NOPB	SOT-23	DBV	5	1000	178.0	8.4	3.2	3.2	1.4	4.0	8.0	Q3
LM4128DMFX-1.8/NOPB	SOT-23	DBV	5	3000	178.0	8.4	3.2	3.2	1.4	4.0	8.0	Q3
LM4128DMFX-2.0/NOPB	SOT-23	DBV	5	3000	178.0	8.4	3.2	3.2	1.4	4.0	8.0	Q3
LM4128DMFX-3.0/NOPB	SOT-23	DBV	5	3000	178.0	8.4	3.2	3.2	1.4	4.0	8.0	Q3
LM4128DMFX-3.3/NOPB	SOT-23	DBV	5	3000	178.0	8.4	3.2	3.2	1.4	4.0	8.0	Q3
LM4128DMFX-4.1/NOPB	SOT-23	DBV	5	3000	178.0	8.4	3.2	3.2	1.4	4.0	8.0	Q3
LM4128DQ1MF1.8/NOPB	SOT-23	DBV	5	1000	178.0	8.4	3.2	3.2	1.4	4.0	8.0	Q3
LM4128DQ1MF2.0/NOPB	SOT-23	DBV	5	1000	178.0	8.4	3.2	3.2	1.4	4.0	8.0	Q3
LM4128DQ1MF2.5/NOPB	SOT-23	DBV	5	1000	178.0	8.4	3.2	3.2	1.4	4.0	8.0	Q3
LM4128DQ1MF3.0/NOPB	SOT-23	DBV	5	1000	178.0	8.4	3.2	3.2	1.4	4.0	8.0	Q3
LM4128DQ1MF3.3/NOPB	SOT-23	DBV	5	1000	178.0	8.4	3.2	3.2	1.4	4.0	8.0	Q3
LM4128DQ1MF4.1/NOPB	SOT-23	DBV	5	1000	178.0	8.4	3.2	3.2	1.4	4.0	8.0	Q3
LM4128DQ1MFX1.8/NOP	SOT-23	DBV	5	3000	178.0	8.4	3.2	3.2	1.4	4.0	8.0	Q3

Device	Package Type	Package Drawing	Pins	SPQ	Reel Diameter (mm)	Reel Width W1 (mm)	A0 (mm)	B0 (mm)	K0 (mm)	P1 (mm)	W (mm)	Pin1 Quadrant
B												
LM4128DQ1MFX2.0/NOPB	SOT-23	DBV	5	3000	178.0	8.4	3.2	3.2	1.4	4.0	8.0	Q3
LM4128DQ1MFX2.5/NOPB	SOT-23	DBV	5	3000	178.0	8.4	3.2	3.2	1.4	4.0	8.0	Q3
LM4128DQ1MFX3.0/NOPB	SOT-23	DBV	5	3000	178.0	8.4	3.2	3.2	1.4	4.0	8.0	Q3
LM4128DQ1MFX3.3/NOPB	SOT-23	DBV	5	3000	178.0	8.4	3.2	3.2	1.4	4.0	8.0	Q3
LM4128DQ1MFX4.1/NOPB	SOT-23	DBV	5	3000	178.0	8.4	3.2	3.2	1.4	4.0	8.0	Q3

TAPE AND REEL BOX DIMENSIONS

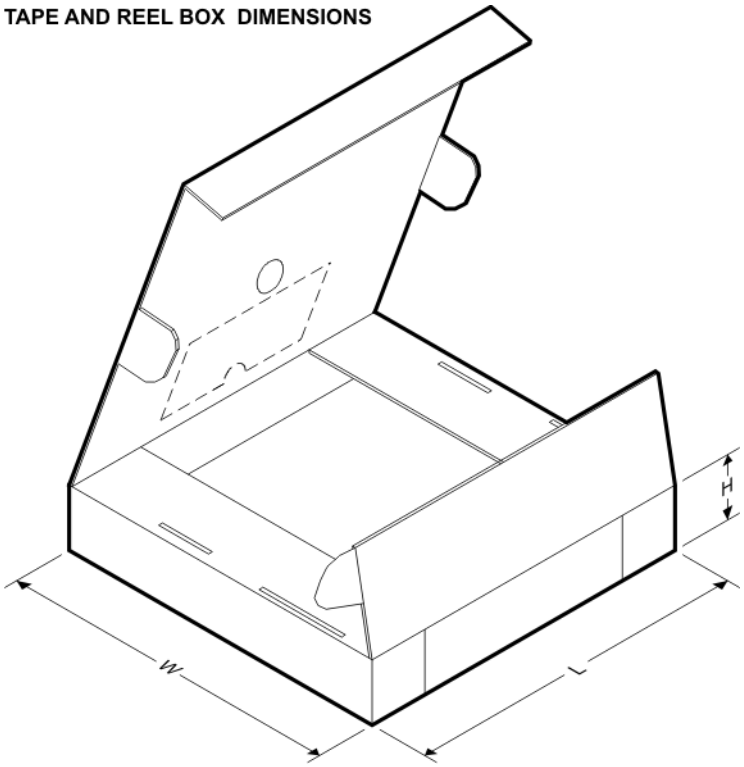

*All dimensions are nominal

Device	Package Type	Package Drawing	Pins	SPQ	Length (mm)	Width (mm)	Height (mm)
LM4128AMF-1.8/NOPB	SOT-23	DBV	5	1000	208.0	191.0	35.0
LM4128AMF-2.0/NOPB	SOT-23	DBV	5	1000	208.0	191.0	35.0
LM4128AMF-2.5/NOPB	SOT-23	DBV	5	1000	208.0	191.0	35.0
LM4128AMF-3.0/NOPB	SOT-23	DBV	5	1000	208.0	191.0	35.0
LM4128AMF-3.3/NOPB	SOT-23	DBV	5	1000	208.0	191.0	35.0
LM4128AMF-4.1/NOPB	SOT-23	DBV	5	1000	208.0	191.0	35.0
LM4128AMFX-1.8/NOPB	SOT-23	DBV	5	3000	208.0	191.0	35.0

Device	Package Type	Package Drawing	Pins	SPQ	Length (mm)	Width (mm)	Height (mm)
LM4128AMFX-2.0/NOPB	SOT-23	DBV	5	3000	208.0	191.0	35.0
LM4128AMFX-2.5/NOPB	SOT-23	DBV	5	3000	208.0	191.0	35.0
LM4128AMFX-3.0/NOPB	SOT-23	DBV	5	3000	208.0	191.0	35.0
LM4128AMFX-3.3/NOPB	SOT-23	DBV	5	3000	208.0	191.0	35.0
LM4128AMFX-4.1/NOPB	SOT-23	DBV	5	3000	208.0	191.0	35.0
LM4128AQ1MF1.8/NOPB	SOT-23	DBV	5	1000	208.0	191.0	35.0
LM4128AQ1MF2.0/NOPB	SOT-23	DBV	5	1000	208.0	191.0	35.0
LM4128AQ1MF2.5/NOPB	SOT-23	DBV	5	1000	208.0	191.0	35.0
LM4128AQ1MF3.0/NOPB	SOT-23	DBV	5	1000	208.0	191.0	35.0
LM4128AQ1MF3.3/NOPB	SOT-23	DBV	5	1000	208.0	191.0	35.0
LM4128AQ1MF4.1/NOPB	SOT-23	DBV	5	1000	208.0	191.0	35.0
LM4128AQ1MFX1.8/NOPB	SOT-23	DBV	5	3000	208.0	191.0	35.0
LM4128AQ1MFX2.0/NOPB	SOT-23	DBV	5	3000	208.0	191.0	35.0
LM4128AQ1MFX2.5/NOPB	SOT-23	DBV	5	3000	208.0	191.0	35.0
LM4128AQ1MFX3.0/NOPB	SOT-23	DBV	5	3000	208.0	191.0	35.0
LM4128AQ1MFX3.3/NOPB	SOT-23	DBV	5	3000	208.0	191.0	35.0
LM4128AQ1MFX4.1/NOPB	SOT-23	DBV	5	3000	208.0	191.0	35.0
LM4128BMF-1.8/NOPB	SOT-23	DBV	5	1000	208.0	191.0	35.0
LM4128BMF-2.0/NOPB	SOT-23	DBV	5	1000	208.0	191.0	35.0
LM4128BMF-2.5	SOT-23	DBV	5	1000	208.0	191.0	35.0
LM4128BMF-2.5/NOPB	SOT-23	DBV	5	1000	208.0	191.0	35.0
LM4128BMF-3.0/NOPB	SOT-23	DBV	5	1000	208.0	191.0	35.0
LM4128BMF-3.3/NOPB	SOT-23	DBV	5	1000	208.0	191.0	35.0
LM4128BMF-4.1/NOPB	SOT-23	DBV	5	1000	208.0	191.0	35.0
LM4128BMFX-1.8/NOPB	SOT-23	DBV	5	3000	208.0	191.0	35.0
LM4128BMFX-2.0/NOPB	SOT-23	DBV	5	3000	208.0	191.0	35.0
LM4128BMFX-2.5/NOPB	SOT-23	DBV	5	3000	208.0	191.0	35.0
LM4128BMFX-3.0/NOPB	SOT-23	DBV	5	3000	208.0	191.0	35.0
LM4128BMFX-3.3/NOPB	SOT-23	DBV	5	3000	208.0	191.0	35.0
LM4128BMFX-4.1/NOPB	SOT-23	DBV	5	3000	208.0	191.0	35.0
LM4128BQ1MF1.8/NOPB	SOT-23	DBV	5	1000	208.0	191.0	35.0
LM4128BQ1MF2.0/NOPB	SOT-23	DBV	5	1000	208.0	191.0	35.0
LM4128BQ1MF2.5/NOPB	SOT-23	DBV	5	1000	208.0	191.0	35.0
LM4128BQ1MF3.0/NOPB	SOT-23	DBV	5	1000	208.0	191.0	35.0
LM4128BQ1MF3.3/NOPB	SOT-23	DBV	5	1000	208.0	191.0	35.0
LM4128BQ1MF4.1/NOPB	SOT-23	DBV	5	1000	208.0	191.0	35.0
LM4128BQ1MFX1.8/NOPB	SOT-23	DBV	5	3000	208.0	191.0	35.0
LM4128BQ1MFX2.0/NOPB	SOT-23	DBV	5	3000	208.0	191.0	35.0
LM4128BQ1MFX2.5/NOPB	SOT-23	DBV	5	3000	208.0	191.0	35.0
LM4128BQ1MFX3.0/NOPB	SOT-23	DBV	5	3000	208.0	191.0	35.0
LM4128BQ1MFX3.3/NOPB	SOT-23	DBV	5	3000	208.0	191.0	35.0
LM4128BQ1MFX4.1/NOPB	SOT-23	DBV	5	3000	208.0	191.0	35.0
LM4128CMF-1.8/NOPB	SOT-23	DBV	5	1000	208.0	191.0	35.0
LM4128CMF-2.0/NOPB	SOT-23	DBV	5	1000	208.0	191.0	35.0

Device	Package Type	Package Drawing	Pins	SPQ	Length (mm)	Width (mm)	Height (mm)
LM4128CMF-2.5/NOPB	SOT-23	DBV	5	1000	208.0	191.0	35.0
LM4128CMF-3.0/NOPB	SOT-23	DBV	5	1000	208.0	191.0	35.0
LM4128CMF-3.3/NOPB	SOT-23	DBV	5	1000	208.0	191.0	35.0
LM4128CMF-4.1/NOPB	SOT-23	DBV	5	1000	208.0	191.0	35.0
LM4128CMFX-1.8/NOPB	SOT-23	DBV	5	3000	208.0	191.0	35.0
LM4128CMFX-2.0/NOPB	SOT-23	DBV	5	3000	208.0	191.0	35.0
LM4128CMFX-2.5/NOPB	SOT-23	DBV	5	3000	208.0	191.0	35.0
LM4128CMFX-3.0/NOPB	SOT-23	DBV	5	3000	208.0	191.0	35.0
LM4128CMFX-3.3/NOPB	SOT-23	DBV	5	3000	208.0	191.0	35.0
LM4128CMFX-4.1/NOPB	SOT-23	DBV	5	3000	208.0	191.0	35.0
LM4128CQ1MF1.8/NOPB	SOT-23	DBV	5	1000	208.0	191.0	35.0
LM4128CQ1MF2.0/NOPB	SOT-23	DBV	5	1000	208.0	191.0	35.0
LM4128CQ1MF2.5/NOPB	SOT-23	DBV	5	1000	208.0	191.0	35.0
LM4128CQ1MF3.0/NOPB	SOT-23	DBV	5	1000	208.0	191.0	35.0
LM4128CQ1MF3.3/NOPB	SOT-23	DBV	5	1000	208.0	191.0	35.0
LM4128CQ1MF4.1/NOPB	SOT-23	DBV	5	1000	208.0	191.0	35.0
LM4128CQ1MFX1.8/NOPB	SOT-23	DBV	5	3000	208.0	191.0	35.0
LM4128CQ1MFX2.0/NOPB	SOT-23	DBV	5	3000	208.0	191.0	35.0
LM4128CQ1MFX2.5/NOPB	SOT-23	DBV	5	3000	208.0	191.0	35.0
LM4128CQ1MFX3.0/NOPB	SOT-23	DBV	5	3000	208.0	191.0	35.0
LM4128CQ1MFX3.3/NOPB	SOT-23	DBV	5	3000	208.0	191.0	35.0
LM4128CQ1MFX4.1/NOPB	SOT-23	DBV	5	3000	208.0	191.0	35.0
LM4128DMF-1.8/NOPB	SOT-23	DBV	5	1000	208.0	191.0	35.0
LM4128DMF-2.0/NOPB	SOT-23	DBV	5	1000	208.0	191.0	35.0
LM4128DMF-2.5/NOPB	SOT-23	DBV	5	1000	208.0	191.0	35.0
LM4128DMF-3.0/NOPB	SOT-23	DBV	5	1000	208.0	191.0	35.0
LM4128DMF-3.3/NOPB	SOT-23	DBV	5	1000	208.0	191.0	35.0
LM4128DMF-4.1/NOPB	SOT-23	DBV	5	1000	208.0	191.0	35.0
LM4128DMFX-1.8/NOPB	SOT-23	DBV	5	3000	208.0	191.0	35.0
LM4128DMFX-2.0/NOPB	SOT-23	DBV	5	3000	208.0	191.0	35.0
LM4128DMFX-3.0/NOPB	SOT-23	DBV	5	3000	208.0	191.0	35.0
LM4128DMFX-3.3/NOPB	SOT-23	DBV	5	3000	208.0	191.0	35.0
LM4128DMFX-4.1/NOPB	SOT-23	DBV	5	3000	208.0	191.0	35.0
LM4128DQ1MF1.8/NOPB	SOT-23	DBV	5	1000	208.0	191.0	35.0
LM4128DQ1MF2.0/NOPB	SOT-23	DBV	5	1000	208.0	191.0	35.0
LM4128DQ1MF2.5/NOPB	SOT-23	DBV	5	1000	208.0	191.0	35.0
LM4128DQ1MF3.0/NOPB	SOT-23	DBV	5	1000	208.0	191.0	35.0
LM4128DQ1MF3.3/NOPB	SOT-23	DBV	5	1000	208.0	191.0	35.0
LM4128DQ1MF4.1/NOPB	SOT-23	DBV	5	1000	208.0	191.0	35.0
LM4128DQ1MFX1.8/NOP	SOT-23	DBV	5	3000	208.0	191.0	35.0

Device	Package Type	Package Drawing	Pins	SPQ	Length (mm)	Width (mm)	Height (mm)
B							
LM4128DQ1MFX2.0/NOPB	SOT-23	DBV	5	3000	208.0	191.0	35.0
LM4128DQ1MFX2.5/NOPB	SOT-23	DBV	5	3000	208.0	191.0	35.0
LM4128DQ1MFX3.0/NOPB	SOT-23	DBV	5	3000	208.0	191.0	35.0
LM4128DQ1MFX3.3/NOPB	SOT-23	DBV	5	3000	208.0	191.0	35.0
LM4128DQ1MFX4.1/NOPB	SOT-23	DBV	5	3000	208.0	191.0	35.0

PACKAGE OUTLINE

DBV0005A

SOT-23 - 1.45 mm max height

SMALL OUTLINE TRANSISTOR

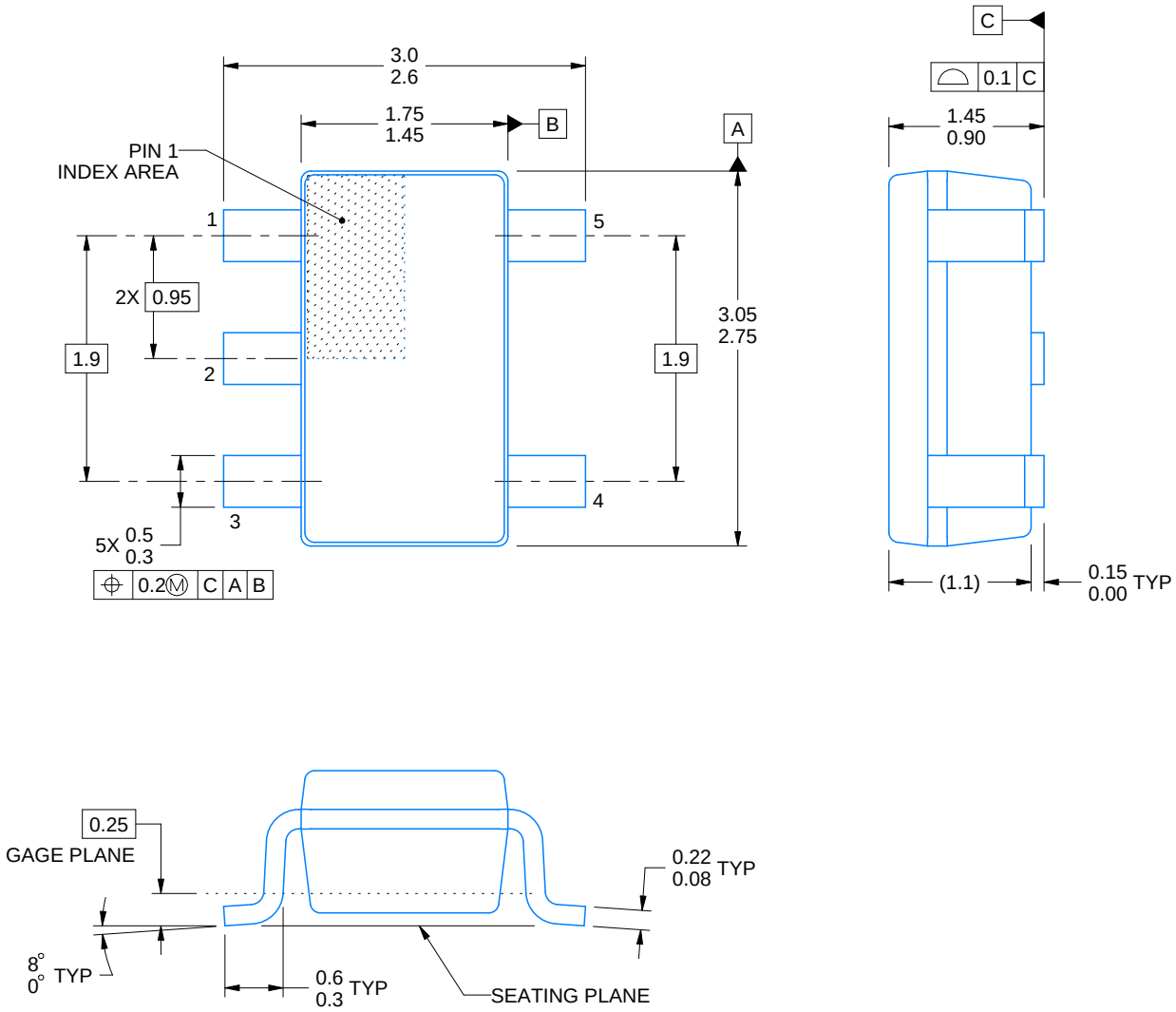

4214839/F 06/2021

NOTES:

1. All linear dimensions are in millimeters. Any dimensions in parenthesis are for reference only. Dimensioning and tolerancing per ASME Y14.5M.
2. This drawing is subject to change without notice.
3. Refernce JEDEC MO-178.
4. Body dimensions do not include mold flash, protrusions, or gate burrs. Mold flash, protrusions, or gate burrs shall not exceed 0.25 mm per side.

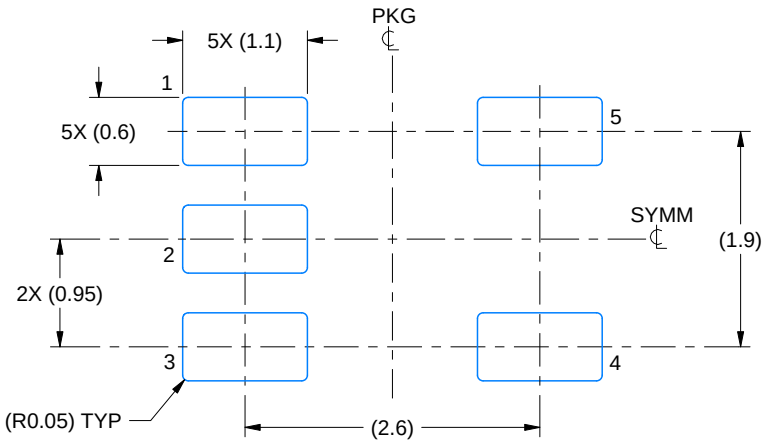

LAND PATTERN EXAMPLE
EXPOSED METAL SHOWN
SCALE:15X

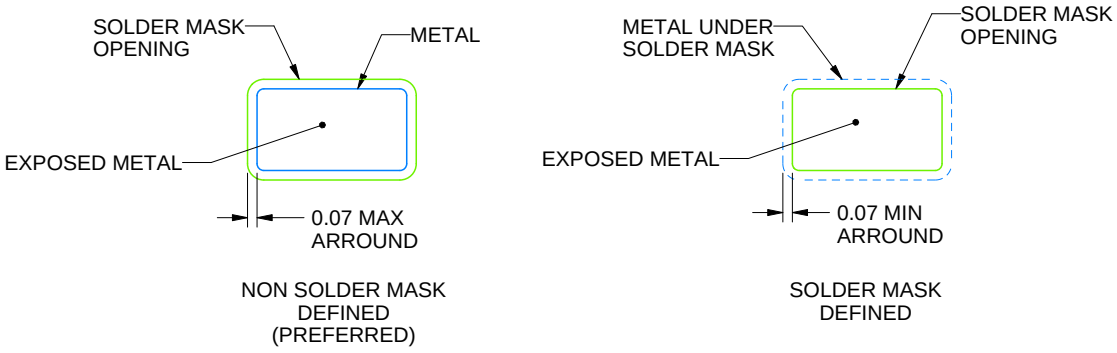

SOLDER MASK DETAILS

4214839/F 06/2021

NOTES: (continued)

5. Publication IPC-7351 may have alternate designs.
6. Solder mask tolerances between and around signal pads can vary based on board fabrication site.

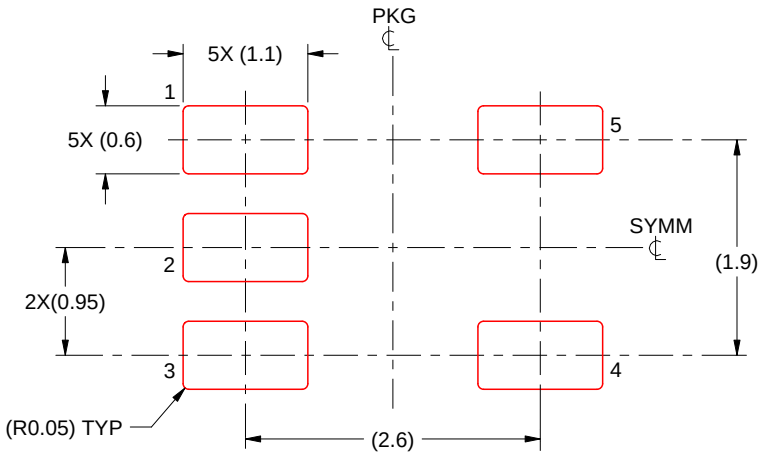

SOLDER PASTE EXAMPLE
BASED ON 0.125 mm THICK STENCIL
SCALE:15X

4214839/F 06/2021

NOTES: (continued)

7. Laser cutting apertures with trapezoidal walls and rounded corners may offer better paste release. IPC-7525 may have alternate design recommendations.
8. Board assembly site may have different recommendations for stencil design.

IMPORTANT NOTICE AND DISCLAIMER

TI PROVIDES TECHNICAL AND RELIABILITY DATA (INCLUDING DATA SHEETS), DESIGN RESOURCES (INCLUDING REFERENCE DESIGNS), APPLICATION OR OTHER DESIGN ADVICE, WEB TOOLS, SAFETY INFORMATION, AND OTHER RESOURCES “AS IS” AND WITH ALL FAULTS, AND DISCLAIMS ALL WARRANTIES, EXPRESS AND IMPLIED, INCLUDING WITHOUT LIMITATION ANY IMPLIED WARRANTIES OF MERCHANTABILITY, FITNESS FOR A PARTICULAR PURPOSE OR NON-INFRINGEMENT OF THIRD PARTY INTELLECTUAL PROPERTY RIGHTS.

These resources are intended for skilled developers designing with TI products. You are solely responsible for (1) selecting the appropriate TI products for your application, (2) designing, validating and testing your application, and (3) ensuring your application meets applicable standards, and any other safety, security, regulatory or other requirements.

These resources are subject to change without notice. TI grants you permission to use these resources only for development of an application that uses the TI products described in the resource. Other reproduction and display of these resources is prohibited. No license is granted to any other TI intellectual property right or to any third party intellectual property right. TI disclaims responsibility for, and you will fully indemnify TI and its representatives against, any claims, damages, costs, losses, and liabilities arising out of your use of these resources.

TI’s products are provided subject to TI’s Terms of Sale or other applicable terms available either on ti.com or provided in conjunction with such TI products. TI’s provision of these resources does not expand or otherwise alter TI’s applicable warranties or warranty disclaimers for TI products.

TI objects to and rejects any additional or different terms you may have proposed.

Mailing Address: Texas Instruments, Post Office Box 655303, Dallas, Texas 75265
Copyright © 2021, Texas Instruments Incorporated