LMR23610-Q1 SIMPLE SWITCHER® 36 V, 1 A Synchronous Step-Down Converter

1 Features

- Qualified for Automotive Applications
- AEC-Q100 Qualified With the Following Results:
  - Device Temperature Grade 1: -40 °C to 125 °C Ambient Operating Temperature Range
  - Device HBM ESD Classification Level H1C
  - Device CDM ESD Classification Level C4A
- 4 V to 36 V Input Range
- 1 A Continuous Output Current
- Integrated Synchronous Rectification
- Current Mode Control
- Minimum Switch-On Time: 60 ns
- Internal Compensation for Ease of Use
- 400 kHz Switching Frequency With PFM Mode
- Frequency Synchronization to External Clock
- 75 µA Quiescent Current at No Load
- Soft-Start into a Pre-Biased Load
- High Duty Cycle Operation Supported
- Output Short-Circuit Protection with Hiccup Mode
- 8-Pin HSOIC with PowerPAD™ Package Options
- Create a Custom Design Using the LMR23610-Q1 With the WEBENCH® Power Designer

2 Applications

- Automotive Battery Regulation
- Industrial Power Supplies
- Telecom and Datacom Systems
- General Purpose Wide Vin Regulation

3 Description

The LMR23610-Q1 SIMPLE SWITCHER® is an easy to use 36 V, 1 A synchronous step down regulator. With a wide input range from 4 V to 36 V, it is suitable for various applications from industrial to automotive for power conditioning from unregulated sources. Peak current mode control is employed to achieve simple control loop compensation and cycle-by-cycle current limiting. A quiescent current of 75 µA makes it suitable for battery powered systems. Internal loop compensation means that the user is free from the tedious task of loop compensation design. This also minimizes the external components. An extended family is available in 1.5 A (LMR23615-Q1), 2.5 A (LMR23625-Q1) and 3 A (LMR23630-Q1) load current options in pin-to-pin compatible packages which allows simple, optimum PCB layout. A precision enable input allows simplification of regulator control and system power sequencing. Protection features include cycle-by-cycle current limit, hiccup mode short circuit protection and thermal shutdown due to excessive power dissipation.

Device Information(1)

PART NUMBER	PACKAGE	BODY SIZE (NOM)
LMR23610AQDDARQ1	HSOIC (8)	4.9 mm x 3.9 mm

(1) For all available packages, see the orderable addendum at the end of the data sheet.

Simplified Schematic

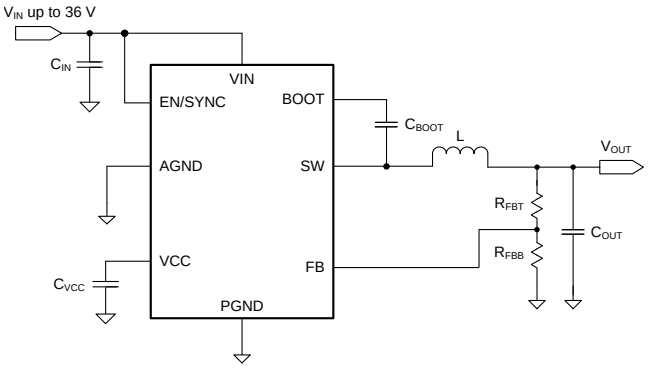

Efficiency vs Load, V_{IN} = 12 V

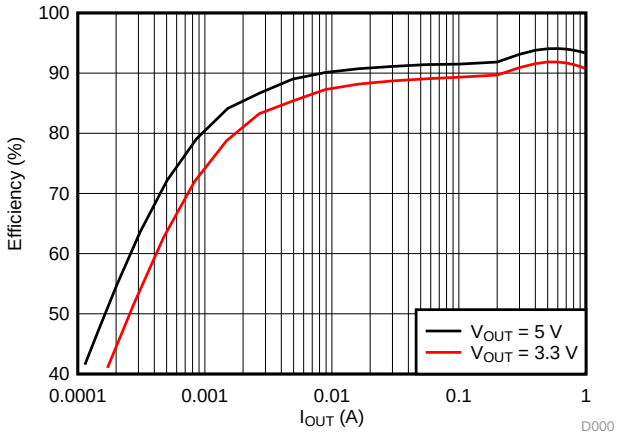

An IMPORTANT NOTICE at the end of this data sheet addresses availability, warranty, changes, use in safety-critical applications, intellectual property matters and other important disclaimers. PRODUCTION DATA.

Table of Contents

1 Features ... 1
2 Applications ... 1
3 Description ... 1
4 Revision History ... 2
5 Pin Configuration and Functions ... 3
6 Specifications ... 4
6.1 Absolute Maximum Ratings ... 4
6.2 ESD Ratings ... 4
6.3 Recommended Operating Conditions ... 4
6.4 Thermal Information ... 5
6.5 Electrical Characteristics ... 5
6.6 Timing Characteristics ... 6
6.7 Switching Characteristics ... 7
6.8 Typical Characteristics ... 8
7 Detailed Description ... 10
7.1 Overview ... 10
7.2 Functional Block Diagram ... 10
7.3 Feature Description ... 11
7.4 Device Functional Modes ... 17
8 Application and Implementation ... 18
8.1 Application Information ... 18
8.2 Typical Applications ... 18
9 Power Supply Recommendations ... 24
10 Layout ... 24
10.1 Layout Guidelines ... 24
10.2 Compact Layout for EMI Reduction ... 24
10.3 Ground Plane and Thermal Considerations ... 25
10.4 Feedback Resistors ... 25
10.5 Layout Example ... 26
11 Device and Documentation Support ... 27
11.1 Custom Design With WEBENCH® Tools ... 27
11.2 Receiving Notification of Documentation Updates 27
11.3 Community Resources ... 27
11.4 Trademarks ... 27
11.5 Electrostatic Discharge Caution ... 27
11.6 Glossary ... 27
12 Mechanical, Packaging, and Orderable Information ... 28

4 Revision History

NOTE: Page numbers for previous revisions may differ from page numbers in the current version.

Changes from Original (December 2016) to Revision A	Page
• Changed the value for HBM from ±2500 to ±2000	4

Copyright © 2016–2017, Texas Instruments Incorporated

5 Pin Configuration and Functions

DDA Package
8-Pin HSOIC
Top View

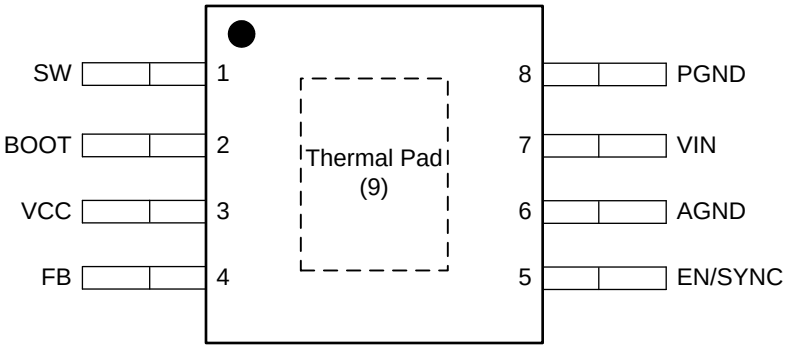

Pin Functions

PIN		I/O (1)	DESCRIPTION
NAME	NO.		
SW	1	P	Switching output of the regulator. Internally connected to both power MOSFETs. Connect to power inductor.
BOOT	2	P	Boot-strap capacitor connection for high-side driver. Connect a high quality 100 nF capacitor from BOOT to SW.
VCC	3	P	Internal bias supply output for bypassing. Connect a 2.2 µF/ 16 V or higher capacitance bypass capacitor from this pin to AGND. Do not connect external loading to this pin. Never short this pin to ground during operation.
FB	4	A	Feedback input to regulator, connect the feedback resistor divider tap to this pin.
EN/SYNC	5	A	Enable input to regulator. High = On, Low = Off. Can be connected to VIN. Do not float. Adjust the input under voltage lockout with two resistors. The internal oscillator can be synchronized to an external clock by coupling a positive pulse into this pin through a small coupling capacitor. See Enable/Sync for detail.
AGND	6	G	Analog ground pin. Ground reference for internal references and logic. Connect to system ground.
VIN	7	P	Input supply voltage.
PGND	8	G	Power ground pin, connected internally to the low side power FET. Connect to system ground, PAD, AGND, ground pins of C_{IN} and C_{OUT}. Path to C_{IN} must be as short as possible.
PAD	9	G	Low impedance connection to AGND. Connect to PGND on PCB. Major heat dissipation path of the die. Must be used for heat sinking to ground plane on PCB.

(1) A = Analog, P = Power, G = Ground

Copyright © 2016–2017, Texas Instruments Incorporated

6 Specifications

6.1 Absolute Maximum Ratings

Over the recommended operating junction temperature range of -40 °C to 125 °C (unless otherwise noted) (1)

PARAMETER		MIN	MAX	UNIT
Input Voltages	VIN to PGND	-0.3	42	V
	EN/SYNC to AGND	-5.5	VIN + 0.3	
	FB to AGND	-0.3	4.5	
	AGND to PGND	-0.3	0.3	
Output Voltages	SW to PGND	-1	VIN + 0.3	V
	SW to PGND less than 10 ns transients	-5	42	
	BOOT to SW	-0.3	5.5	
	VCC to AGND	-0.3	4.5 (2)	
T_J	Junction temperature	-40	150	°C
T_{stg}	Storage temperature	-65	150	°C

(1) Stresses beyond those listed under *Absolute Maximum Ratings* may cause permanent damage to the device. These are stress ratings only, which do not imply functional operation of the device at these or any other conditions beyond those indicated under *Recommended Operating Conditions*. Exposure to absolute-maximum-rated conditions for extended periods may affect device reliability.
(2) In shutdown mode, the VCC to AGND maximum value is 5.25 V.

6.2 ESD Ratings

		VALUE	UNIT
$V_{(ESD)}$ Electrostatic discharge	Human-body model (HBM) (1)	±2000	V
	Charged-device model (CDM)	±1000	

(1) AEC Q100-002 indicates that HBM stressing shall be in accordance with the ANSI/ESDA/JEDEC JS-001 specification.

6.3 Recommended Operating Conditions

Over the recommended operating junction temperature range of -40 °C to 125 °C (unless otherwise noted) (1)

		MIN	MAX	UNIT
Input Voltage	VIN	4	36	V
	EN/SYNC	-5	36	
	FB	-0.3	1.2	
Output Voltage	V_{OUT}	1	28	V
Output Current	I_{OUT}	0	1	A
Temperature	Operating junction temperature, T_J	-40	125	°C

(1) Operating Ratings indicate conditions for which the device is intended to be functional, but do not guarantee specific performance limits. For guaranteed specifications, see *Electrical Characteristics.*

Copyright © 2016–2017, Texas Instruments Incorporated

6.4 Thermal Information

THERMAL METRIC (1) (2)		DDA (8 PINS)	UNIT
$R_{\theta JA}$	Junction-to-ambient thermal resistance	42.0	°C/W
ψ_{JT}	Junction-to-top characterization parameter	5.9	
ψ_{JB}	Junction-to-board characterization parameter	23.4	
$R_{\theta JC(top)}$	Junction-to-case (top) thermal resistance	45.8	
$R_{\theta JC(bot)}$	Junction-to-case (bottom) thermal resistance	3.6	
$R_{\theta JB}$	Junction-to-board thermal resistance	23.4	

(1) For more information about traditional and new thermal metrics, see the *Semiconductor and IC Package Thermal Metrics* application report, SPRA953.
(2) Power rating at a specific ambient temperature T_A should be determined with a maximum junction temperature (T_J) of 125 °C, which is illustrated in *Recommended Operating Conditions* section.

6.5 Electrical Characteristics

Limits apply over the recommended operating junction temperature (T_J) range of -40 °C to +125 °C, unless otherwise stated. Minimum and Maximum limits are specified through test, design or statistical correlation. Typical values represent the most likely parametric norm at T_J = 25 °C, and are provided for reference purposes only.

PARAMETER		TEST CONDITIONS	MIN	TYP	MAX	UNIT
POWER SUPPLY (VIN PIN)						
V_{IN}	Operation input voltage		4		36	V
VIN_UVLO	Under voltage lockout thresholds	Rising threshold	3.3	3.7	3.9	V
		Falling threshold	2.9	3.3	3.5	
I_{SHDN}	Shutdown supply current	V_{EN} = 0 V, V_{IN} = 12 V, T_J = -40 °C to 125 °C		2.0	4.0	µA
I_Q	Operating quiescent current (non-switching)	V_{IN} =12 V, V_{FB} = 1.1 V, T_J = -40 °C to 125 °C, PFM mode		75		µA
ENABLE (EN PIN)						
V_{EN_H}	Enable rising threshold Voltage		1.4	1.55	1.7	V
V_{EN_HYS}	Enable hysteresis voltage			0.4		V
V_{WAKE}	Wake-up threshold		0.4			V
I_{EN}	Input leakage current at EN pin	V_{IN} = 4 V to 36 V, V_{EN}= 2 V		10	100	nA
		V_{IN} = 4 V to 36 V, V_{EN}= 36 V			1	µA
VOLTAGE REFERENCE (FB PIN)						
V_{REF}	Reference voltage	V_{IN} = 4 V to 36 V, T_J = 25 °C	0.985	1.0	1.015	V
		V_{IN} = 4 V to 36 V, T_J = -40 °C to 125 °C	0.980	1.0	1.020	
I_{LKG_FB}	Input leakage current at FB pin	V_{FB}= 1 V		10		nA
INTERNAL LDO (VCC PIN)						
V_{CC}	Internal LDO output voltage			4.1		V
VCC_UVLO	VCC under voltage lockout thresholds	Rising threshold	2.8	3.2	3.6	V
		Falling threshold	2.4	2.8	3.2	
CURRENT LIMIT						
I_{HS_LIMIT}	Peak inductor current limit		1.4	2.0	2.6	A
I_{LS_LIMIT}	Valley inductor current limit		1.0	1.5	2.1	A
I_{L_ZC}	Zero cross current limit			-0.04		A
INTEGRATED MOSFETS						
$R_{DS_ON_HS}$	High-side MOSFET ON-resistance	V_{IN} = 12 V, I_{OUT} = 1 A		185		mΩ
$R_{DS_ON_LS}$	Low-side MOSFET ON-resistance	V_{IN} = 12 V, I_{OUT} = 1 A		105		mΩ
THERMAL SHUTDOWN						
T_{SHDN}	Thermal shutdown threshold		162	170	178	°C
T_{HYS}	Hysteresis			15		°C

Copyright © 2016–2017, Texas Instruments Incorporated

6.6 Timing Characteristics

Over the recommended operating junction temperature range of -40 °C to 125 °C (unless otherwise noted)

PARAMETER		TEST CONDITIONS	MIN	TYP	MAX	UNIT
HICCUP MODE						
N_{OC} (1)	Number of cycles that LS current limit is tripped to enter Hiccup mode			64		Cycles
T_{OC}	Hiccup retry delay time			5		ms
SOFT START						
T_{SS}	Internal soft-start time	The time of internal reference to increase from 0 V to 1.0 V	1	2	3	ms

(1) Guaranteed by design.

Copyright © 2016–2017, Texas Instruments Incorporated

6.7 Switching Characteristics

Over the recommended operating junction temperature range of -40 °C to 125 °C (unless otherwise noted)

PARAMETER		MIN	TYP	MAX	UNIT
SW (SW PIN)					
f_{SW}	Default switching frequency	340	400	460	kHz
T_{ON_MIN}	Minimum turn-on time		60	90	ns
T_{OFF_MIN} (1)	Minimum turn-off time		100		ns
SYNC (EN/SYNC PIN)					
f_{SYNC}	SYNC frequency range	200		2200	kHz
V_{SYNC}	Amplitude of SYNC clock AC signal (measured at SYNC pin)	2.8		5.5	V
T_{SYNC_MIN}	Minimum sync clock ON and OFF time		100		ns

(1) Guaranteed by design.

6.8 Typical Characteristics

Unless otherwise specified the following conditions apply: V_{IN} = 12 V, f_{SW} = 400 kHz, L = 22 µH, C_{OUT} = 47 µF × 2, T_A = 25°C.

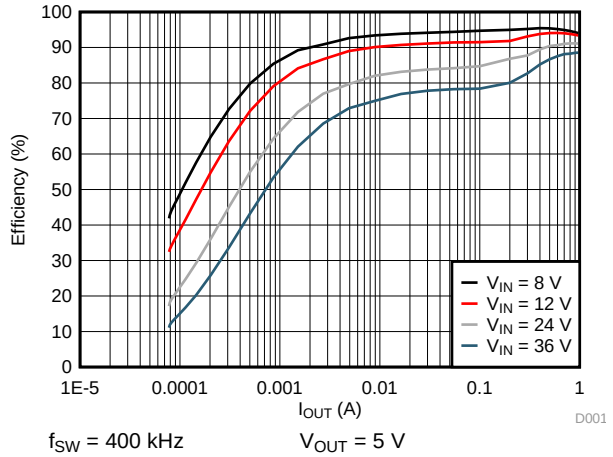

f_{SW} = 400 kHz V_{OUT} = 5 V

Figure 1. Efficiency vs. Load Current

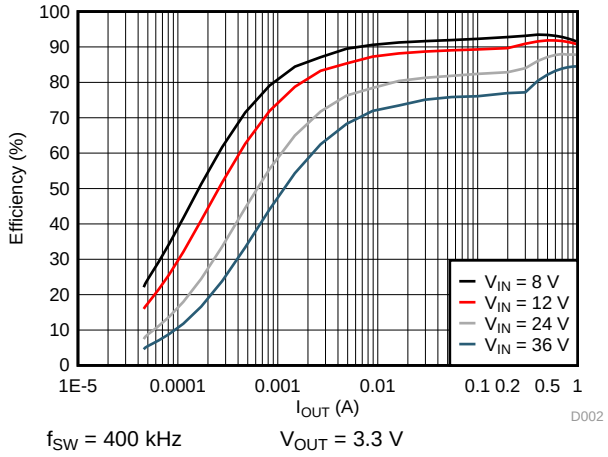

f_{SW} = 400 kHz V_{OUT} = 3.3 V

Figure 2. Efficiency vs. Load Current

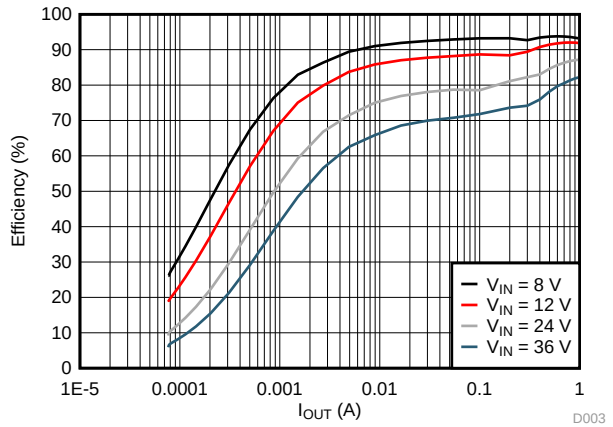

f_{SW} = 1000 kHz (Sync) V_{OUT} = 5 V

Figure 3. Efficiency vs. Load Current

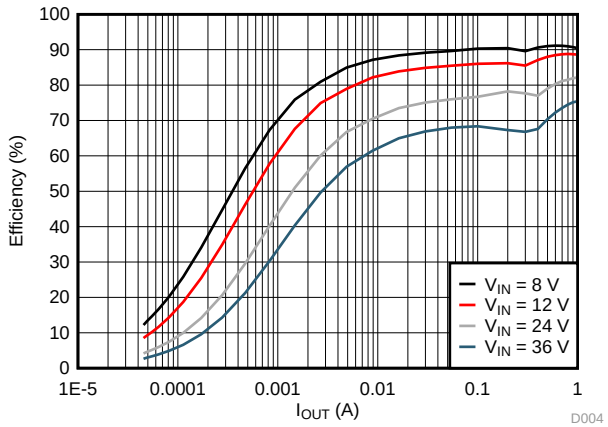

f_{SW} = 1000 kHz (Sync) V_{OUT} = 3.3 V

Figure 4. Efficiency vs. Load Current

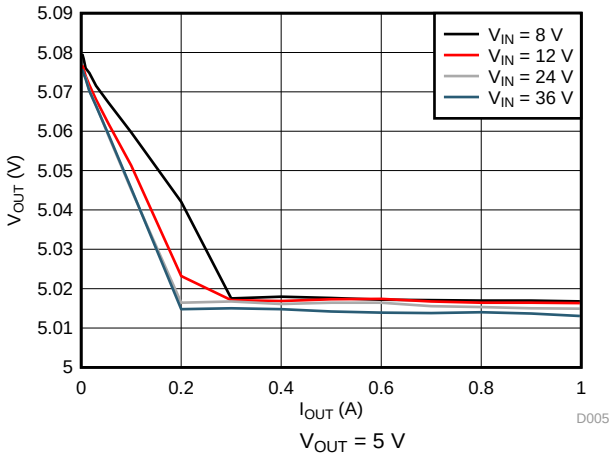

V_{OUT} = 5 V

Figure 5. Load Regulation

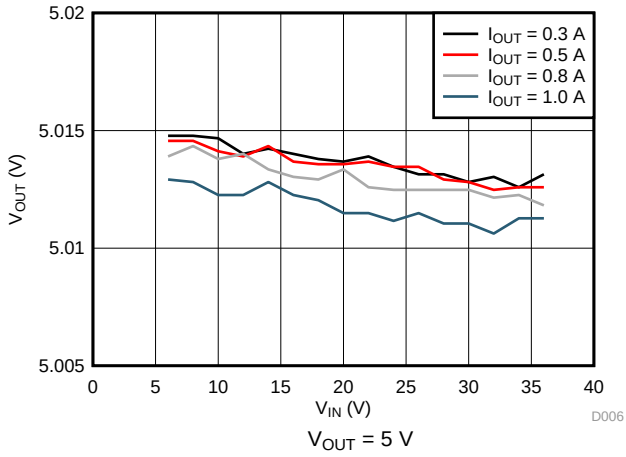

V_{OUT} = 5 V

Figure 6. Line Regulation

Copyright © 2016–2017, Texas Instruments Incorporated

Typical Characteristics (continued)

Unless otherwise specified the following conditions apply: V_{IN} = 12 V, f_{SW} = 400 kHz, L = 22 µH, C_{OUT} = 47 µF × 2, T_A = 25°C.

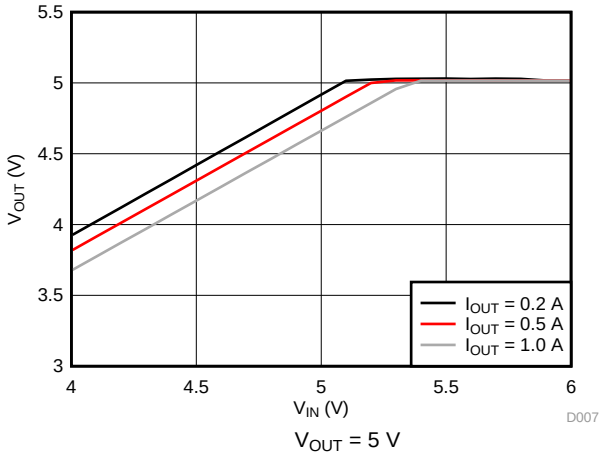

Figure 7. Dropout Curve

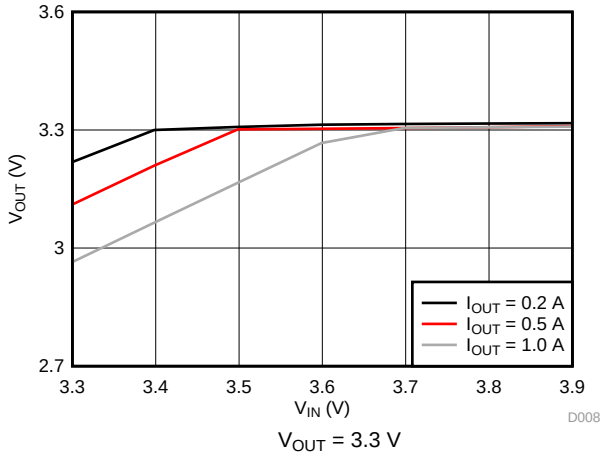

Figure 8. Dropout Curve

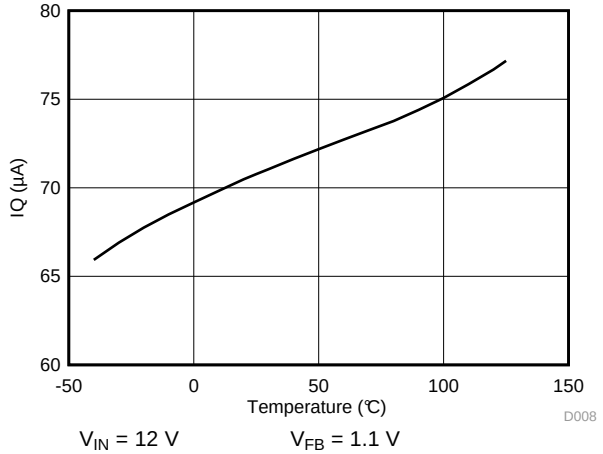

Figure 9. I_Q vs. Junction Temperature

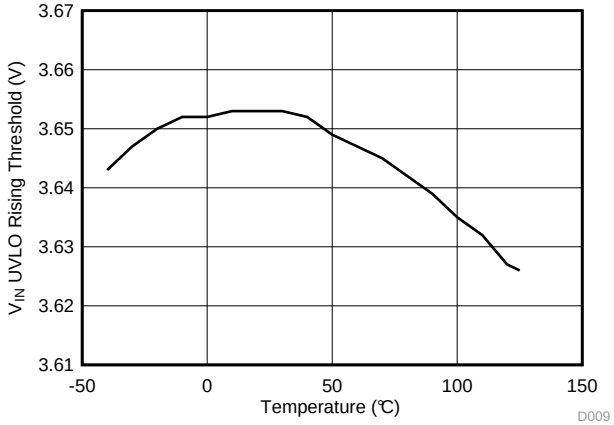

Figure 10. VIN UVLO Rising Threshold vs. Junction Temperature

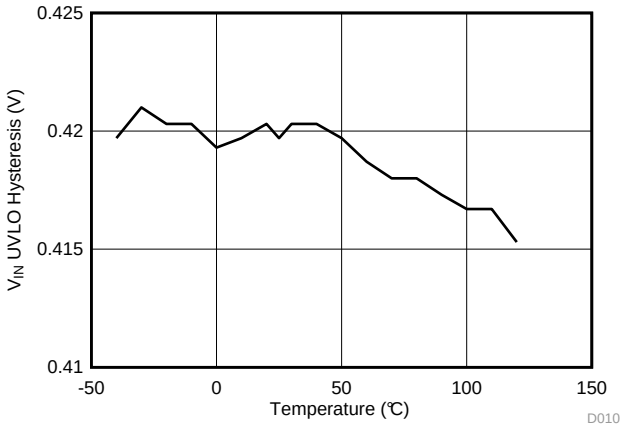

Figure 11. VIN UVLO Hysteresis vs. Junction Temperature

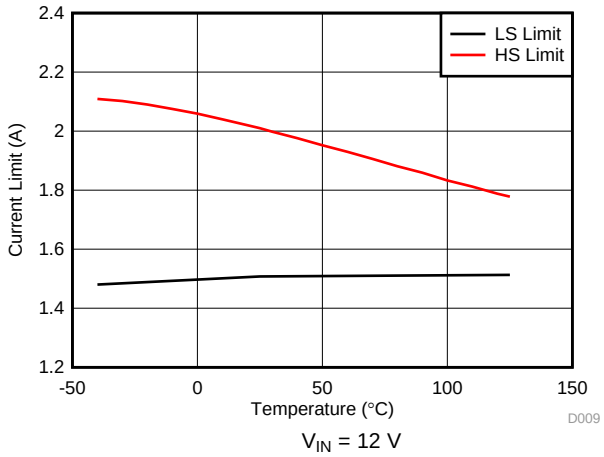

Figure 12. HS & LS Current Limit vs. Junction Temperature

7 Detailed Description

7.1 Overview

The LMR23610-Q1 SIMPLE SWITCHER® regulator is an easy to use synchronous step-down DC-DC converter operating from 4 V to 36 V supply voltage. It is capable of delivering up to 1 A DC load current with good thermal performance in a small solution size. An extended family is available in multiple current options from 1 A to 3 A in pin-to-pin compatible packages.

The LMR23610-Q1 employs fixed frequency peak current mode control. The device enters PFM mode at light load to achieve high efficiency. The device is internally compensated, which reduces design time, and requires few external components. The LMR23610-Q1 is capable of synchronization to an external clock within the range of 200 kHz to 2.2 MHz.

Additional features such as precision enable and internal soft-start provide a flexible and easy to use solution for a wide range of applications. Protection features include thermal shutdown, VIN and VCC under-voltage lockout, cycle-by-cycle current limit, and hiccup mode short-circuit protection.

The family requires very few external components and has a pin-out designed for simple, optimum PCB layout.

7.2 Functional Block Diagram

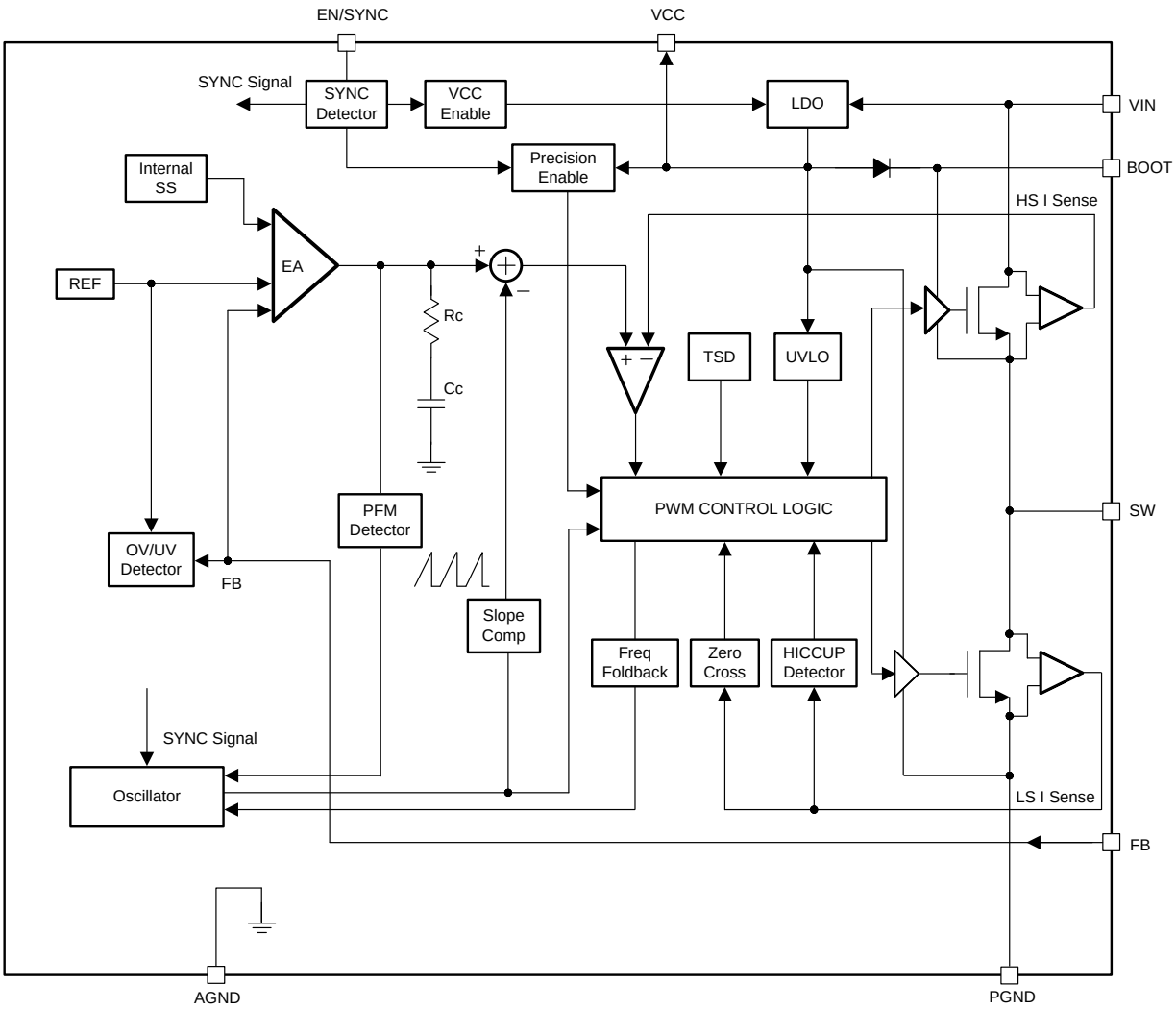

Copyright © 2016–2017, Texas Instruments Incorporated

7.3 Feature Description

7.3.1 Fixed Frequency Peak Current Mode Control

The following operating description of the LMR23610-Q1 will refer to the *Functional Block Diagram* and to the waveforms in Figure 13. LMR23610-Q1 is a step-down synchronous buck regulator with integrated high-side (HS) and low-side (LS) switches (synchronous rectifier). The LMR23610-Q1 supplies a regulated output voltage by turning on the HS and LS NMOS switches with controlled duty cycle. During high-side switch ON time, the SW pin voltage swings up to approximately V_{IN}, and the inductor current i_L increase with linear slope ($V_{IN} – V_{OUT}$) / L. When the HS switch is turned off by the control logic, the LS switch is turned on after an anti-shoot-through dead time. Inductor current discharges through the LS switch with a slope of $–V_{OUT}$ / L. The control parameter of a buck converter is defined as Duty Cycle D = t_{ON} / T_{SW}, where t_{ON} is the high-side switch ON time and T_{SW} is the switching period. The regulator control loop maintains a constant output voltage by adjusting the duty cycle D. In an ideal buck converter, where losses are ignored, D is proportional to the output voltage and inversely proportional to the input voltage: D = V_{OUT} / V_{IN}.

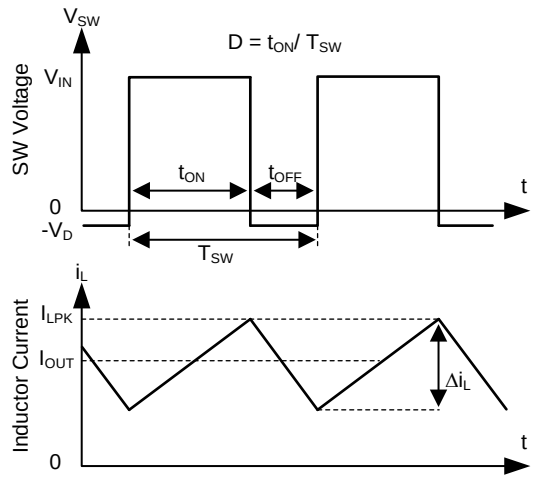

Figure 13. SW Node and Inductor Current Waveforms in Continuous Conduction Mode (CCM)

The LMR23610-Q1 employs fixed frequency peak current mode control. A voltage feedback loop is used to get accurate DC voltage regulation by adjusting the peak current command based on voltage offset. The peak inductor current is sensed from the high-side switch and compared to the peak current threshold to control the ON time of the high-side switch. The voltage feedback loop is internally compensated, which allows for fewer external components, makes it easy to design, and provides stable operation with almost any combination of output capacitors. The regulator operates with fixed switching frequency at normal load condition. At light load condition, the LMR23610-Q1 will operate in PFM mode to maintain high efficiency.

7.3.2 Adjustable Output Voltage

A precision 1.0 V reference voltage is used to maintain a tightly regulated output voltage over the entire operating temperature range. The output voltage is set by a resistor divider from output voltage to the FB pin. It is recommended to use 1% tolerance resistors with a low temperature coefficient for the FB divider. Select the low-side resistor R_{FBB} for the desired divider current and use Equation 1 to calculate high-side R_{FBT}. R_{FBT} in the range from 10 kΩ to 100 kΩ is recommended for most applications. A lower R_{FBT} value can be used if static loading is desired to reduce V_{OUT} offset in PFM operation. Lower R_{FBT} will reduce efficiency at very light load. Less static current goes through a larger R_{FBT} and might be more desirable when light load efficiency is critical. But R_{FBT} larger than 1 MΩ is not recommended because it makes the feedback path more susceptible to noise. Larger R_{FBT} value requires more carefully designed feedback path on the PCB. The tolerance and temperature variation of the resistor dividers affect the output voltage regulation.

Feature Description (continued)

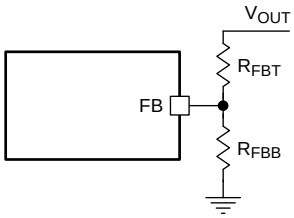

Figure 14. Output Voltage Setting

$$R_{FBT} = \frac{V_{OUT} - V_{REF}}{V_{REF}} \times R_{FBB} \tag{1}$$

7.3.3 Enable/Sync

The voltage on the EN pin controls the ON or OFF operation of LMR23610-Q1. A voltage less than 1 V (typ) will shut-down the device while a voltage higher than 1.6 V (typ) is required to start the regulator. The EN pin is an input and can not be left open or floating. The simplest way to enable the operation of the LMR23610-Q1 is to connect the EN to V_{IN}. This allows self-start-up of the LMR23610-Q1 when V_{IN} is within the operation range.

Many applications will benefit from the employment of an enable divider R_{ENT} and R_{ENB} (Figure 15) to establish a precision system UVLO level for the converter. System UVLO can be used for supplies operating from utility power as well as battery power. It can be used for sequencing, ensuring reliable operation, or supply protection, such as a battery discharge level. An external logic signal can also be used to drive EN input for system sequencing and protection.

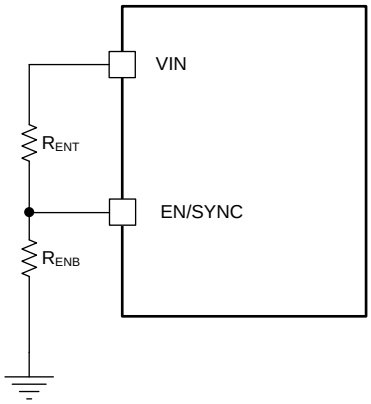

Figure 15. System UVLO by Enable Divider

The EN pin also can be used to synchronize the internal oscillator to an external clock. The internal oscillator can be synchronized by AC coupling a positive edge into the EN pin. The AC coupled peak-to-peak voltage at the EN pin must exceed the SYNC amplitude threshold of 2.8 V (typ) to trip the internal synchronization pulse detector, and the minimum SYNC clock ON and OFF time must be longer than 100ns (typ). A 3.3 V or a higher amplitude pulse signal coupled through a 1 nF capacitor C_{SYNC} is a good starting point. Keeping R_{ENT} // R_{ENB} (R_{ENT} parallel with R_{ENB}) in the 100 kΩ range is a good choice. R_{ENT} is required for this synchronization circuit, but R_{ENB} can be left unmounted if system UVLO is not needed. LMR23610-Q1 switching action can be synchronized to an external clock from 200 kHz to 2.2 MHz. Figure 17 and Figure 18 show the device synchronized to an external system clock.

Copyright © 2016–2017, Texas Instruments Incorporated

Feature Description (continued)

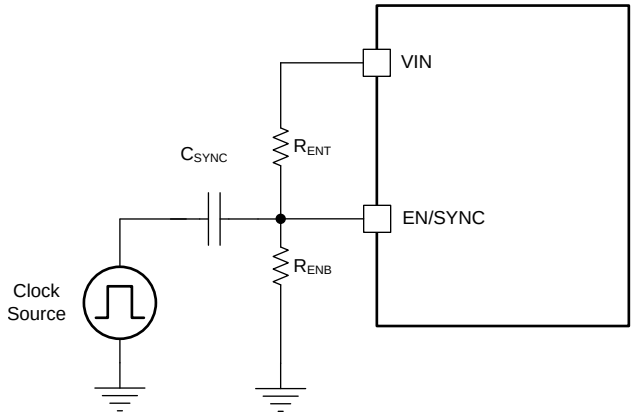

Figure 16. Synchronize to external clock

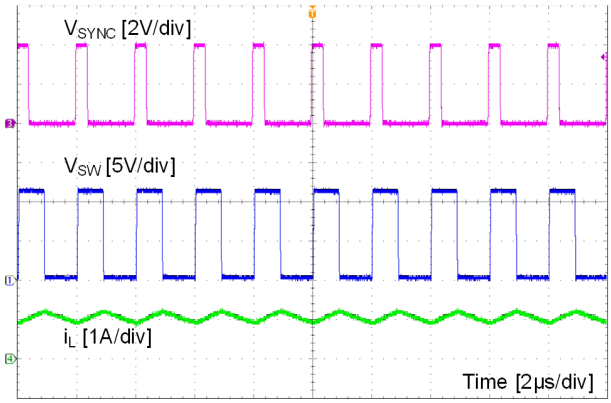

Figure 17. Synchronizing in PWM Mode

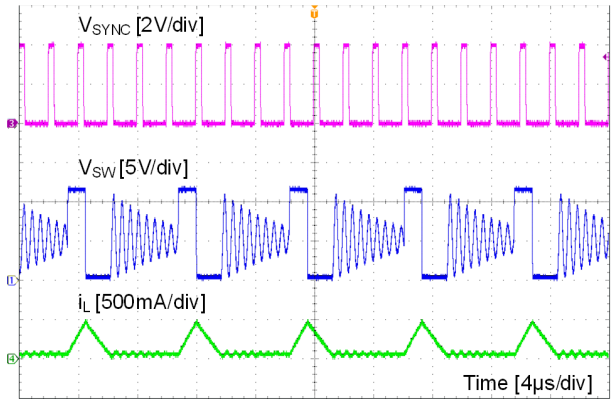

Figure 18. Synchronizing in PFM Mode

7.3.4 VCC, UVLO

The LMR23610-Q1 integrates an internal LDO to generate V_{CC} for control circuitry and MOSFET drivers. The nominal voltage for V_{CC} is 4.1 V. The VCC pin is the output of an LDO and must be properly bypassed. A high quality ceramic capacitor with a value of 2.2 µF to 10 µF, 16 V or higher rated voltage should be placed as close as possible to VCC and grounded to the exposed PAD and ground pins. The VCC output pin should not be loaded, or shorted to ground during operation. Shorting VCC to ground during operation may cause damage to the LMR23610-Q1.

VCC under voltage lockout (UVLO) prevents the LMR23610-Q1 from operating until the V_{CC} voltage exceeds 3.2 V (typ). The VCC UVLO threshold has 400 mV (typ) of hysteresis to prevent undesired shutdown due to temporary V_{IN} drops.

7.3.5 Minimum ON-time, Minimum OFF-time and Frequency Foldback at Drop-out Conditions

Minimum ON-time, T_{ON_MIN}, is the smallest duration of time that the HS switch can be on. T_{ON_MIN} is typically 60 ns in the LMR23610-Q1. Minimum OFF-time, T_{OFF_MIN}, is the smallest duration that the HS switch can be off. T_{OFF_MIN} is typically 100 ns in the LMR23610-Q1. In CCM operation, T_{ON_MIN} and T_{OFF_MIN} limit the voltage conversion range given a selected switching frequency.

The minimum duty cycle allowed is:

$$D_{MIN} = T_{ON_MIN} \times f_{SW} \quad (2)$$

And the maximum duty cycle allowed is:

$$D_{MAX} = 1 - T_{OFF_MIN} \times f_{SW} \quad (3)$$

Feature Description (continued)

Given fixed T_{ON_MIN} and T_{OFF_MIN}, the higher the switching frequency the narrower the range of the allowed duty cycle. In the LMR23610-Q1, a frequency foldback scheme is employed to extend the maximum duty cycle when T_{OFF_MIN} is reached. The switching frequency will decrease once longer duty cycle is needed under low V_{IN} conditions. Wide range of frequency foldback allows the LMR23610-Q1 output voltage stay in regulation with a much lower supply voltage V_{IN}. This leads to a lower effective drop-out voltage.

Given an output voltage, the choice of the switching frequency affects the allowed input voltage range, solution size and efficiency. The maximum operation supply voltage can be found by:

$$V_{IN_MAX} = \frac{V_{OUT}}{\left(f_{SW} \times T_{ON_MIN}\right)} \tag{4}$$

At lower supply voltage, the switching frequency will decrease once T_{OFF_MIN} is tripped. The minimum V_{IN} without frequency foldback can be approximated by:

$$V_{IN_MIN} = \frac{V_{OUT}}{\left(1 - f_{SW} \times T_{OFF_MIN}\right)} \tag{5}$$

Taking considerations of power losses in the system with heavy load operation, V_{IN_MAX} is higher than the result calculated in Equation 4. With frequency foldback, V_{IN_MIN} is lowered by decreased f_{SW}.

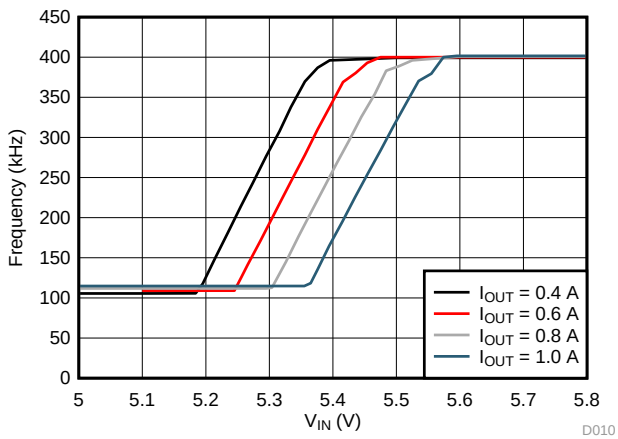

Figure 19. Frequency Foldback at Dropout (V_{OUT} = 5 V, f_{SW} = 400 kHz)

7.3.6 Internal Compensation and C_{FF}

The LMR23610-Q1 is internally compensated as shown in Functional Block Diagram. The internal compensation is designed such that the loop response is stable over the entire operating frequency and output voltage range. Depending on the output voltage, the compensation loop phase margin can be low with all ceramic capacitors. An external feed-forward capacitor C_{FF} is recommended to be placed in parallel with the top resistor divider R_{FBT} for optimum transient performance.

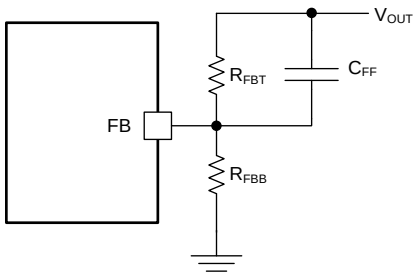

Figure 20. Feedforward Capacitor for Loop Compensation

Copyright © 2016–2017, Texas Instruments Incorporated

Feature Description (continued)

The feed-forward capacitor C_{FF} in parallel with R_{FBT} places an additional zero before the cross over frequency of the control loop to boost phase margin. The zero frequency can be found by

$$f_{Z_CFF} = \frac{1}{\left(2\pi \times C_{FF} \times R_{FBT}\right)} \tag{6}$$

An additional pole is also introduced with C_{FF} at the frequency of

$$f_{P_CFF} = \frac{1}{\left(2\pi \times C_{FF} \times R_{FBT} // R_{FBB}\right)} \tag{7}$$

The zero f_{Z_CFF} adds phase boost at the crossover frequency and improves transient response. The pole $f_{P\text{-}CFF}$ helps maintaining proper gain margin at frequency beyond the crossover. Table 1 lists the combination of C_{OUT}, C_{FF} and R_{FBT} for typical applications, designs with similar C_{OUT} but R_{FBT} other than recommended value, please adjust C_{FF} such that ($C_{FF} \times R_{FBT}$) is unchanged and adjust R_{FBB} such that (R_{FBT} / R_{FBB}) is unchanged.

Designs with different combinations of output capacitors need different C_{FF}. Different types of capacitors have different Equivalent Series Resistance (ESR). Ceramic capacitors have the smallest ESR and need the most C_{FF}. Electrolytic capacitors have much larger ESR and the ESR zero frequency

$$f_{Z_ESR} = \frac{1}{\left(2\pi \times C_{OUT} \times ESR\right)} \tag{8}$$

would be low enough to boost the phase up around the crossover frequency. Designs using mostly electrolytic capacitors at the output may not need any C_{FF}.

The C_{FF} creates a time constant with R_{FBT} that couples in the attenuate output voltage ripple to the FB node. If the C_{FF} value is too large, it can couple too much ripple to the FB and affect V_{OUT} regulation. Therefore, C_{FF} should be calculated based on output capacitors used in the system. At cold temperatures, the value of C_{FF} might change based on the tolerance of the chosen component. This may reduce its impedance and ease noise coupling on the FB node. To avoid this, more capacitance can be added to the output or the value of C_{FF} can be reduced.

7.3.7 Bootstrap Voltage (BOOT)

The LMR23610-Q1 provides an integrated bootstrap voltage regulator. A small capacitor between the BOOT and SW pins provides the gate drive voltage for the high-side MOSFET. The BOOT capacitor is refreshed when the high-side MOSFET is off and the low-side switch conducts. The recommended value of the BOOT capacitor is 0.1 µF. A ceramic capacitor with an X7R or X5R grade dielectric with a voltage rating of 16V or higher is recommended for stable performance over temperature and voltage.

7.3.8 Over Current and Short Circuit Protection

The LMR23610-Q1 is protected from over-current conditions by cycle-by-cycle current limit on both the peak and valley of the inductor current. Hiccup mode will be activated if a fault condition persists to prevent over-heating.

High-side MOSFET over-current protection is implemented by the nature of the Peak Current Mode control. The HS switch current is sensed when the HS is turned on after a set blanking time. The HS switch current is compared to the output of the Error Amplifier (EA) minus slope compensation every switching cycle. Please refer to Functional Block Diagram for more details. The peak current of HS switch is limited by a clamped maximum peak current threshold I_{HS_LIMIT} which is constant. So the peak current limit of the high-side switch is not affected by the slope compensation and remains constant over the full duty cycle range.

The current going through LS MOSFET is also sensed and monitored. When the LS switch turns on, the inductor current begins to ramp down. The LS switch will not be turned OFF at the end of a switching cycle if its current is above the LS current limit I_{LS_LIMIT}. The LS switch will be kept ON so that inductor current keeps ramping down, until the inductor current ramps below the LS current limit I_{LS_LIMIT}. Then the LS switch will be turned OFF and the HS switch will be turned on after a dead time. This is somewhat different than the more typical peak current limit, and results in Equation 9 for the maximum load current.

$$I_{OUT_MAX} = I_{LS_LIMIT} + \frac{\left(V_{IN} - V_{OUT}\right)}{2 \times f_{SW} \times L} \times \frac{V_{OUT}}{V_{IN}} \tag{9}$$

Feature Description (continued)

If the current of the LS switch is higher than the LS current limit for 64 consecutive cycles, hiccup current protection mode will be activated. In hiccup mode, the regulator will be shut down and kept off for 5 ms typically before the LMR23610-Q1 tries to start again. If over-current or short-circuit fault condition still exist, hiccup will repeat until the fault condition is removed. Hiccup mode reduces power dissipation under severe over-current conditions, prevents over-heating and potential damage to the device.

7.3.9 Thermal Shutdown

The LMR23610-Q1 provides an internal thermal shutdown to protect the device when the junction temperature exceeds 170 °C (typ). The device is turned off when thermal shutdown activates. Once the die temperature falls below 155 °C (typ), the device reinitiates the power up sequence controlled by the internal soft-start circuitry.

Copyright © 2016–2017, Texas Instruments Incorporated

7.4 Device Functional Modes

7.4.1 Shutdown Mode

The EN pin provides electrical ON and OFF control for the LMR23610-Q1. When V_{EN} is below 1 V (typ), the device is in shutdown mode. The LMR23610-Q1 also employs VIN and VCC under voltage lock out protection. If V_{IN} or V_{CC} voltage is below their respective UVLO level, the regulator will be turned off.

7.4.2 Active Mode

The LMR23610-Q1 is in Active Mode when V_{EN} is above the precision enable threshold, V_{IN} and V_{CC} are above their respective UVLO level. The simplest way to enable the LMR23610-Q1 is to connect the EN pin to VIN pin. This allows self startup when the input voltage is in the operating range: 4 V to 36 V. Please refer to *VCC, UVLO and Enable/Sync* for details on setting these operating levels.

In Active Mode, depending on the load current, the LMR23610-Q1 will be in one of three modes:

1. Continuous conduction mode (CCM) with fixed switching frequency when load current is above half of the peak-to-peak inductor current ripple.
2. Discontinuous conduction mode (DCM) with fixed switching frequency when load current is lower than half of the peak-to-peak inductor current ripple in CCM operation.
3. Pulse frequency modulation mode (PFM) when switching frequency is decreased at very light load.

7.4.3 CCM Mode

CCM operation is employed in the LMR23610-Q1 when the load current is higher than half of the peak-to-peak inductor current. In CCM operation, the frequency of operation is fixed, output voltage ripple will be at a minimum in this mode and the maximum output current of 1 A can be supplied by the LMR23610-Q1.

7.4.4 Light Load Operation

When the load current is lower than half of the peak-to-peak inductor current in CCM, the LMR23610-Q1 will operate in Discontinuous Conduction Mode (DCM), also known as Diode Emulation Mode (DEM). In DCM, the LS switch is turned off when the inductor current drops to I_{L_ZC} (-40 mA typ). Both switching losses and conduction losses are reduced in DCM, compared to forced PWM operation at light load.

At even lighter current loads, Pulse Frequency Modulation (PFM) is activated to maintain high efficiency operation. When either the minimum HS switch ON time (t_{ON_MIN}) or the minimum peak inductor current I_{PEAK_MIN} (300 mA typ) is reached, the switching frequency will decrease to maintain regulation. In PFM, switching frequency is decreased by the control loop when load current reduces to maintain output voltage regulation. Switching loss is further reduced in PFM operation due to less frequent switching actions. The external clock synchronizing will not be valid when LMR23610-Q1 enters into PFM mode.

Copyright © 2016–2017, Texas Instruments Incorporated

8 Application and Implementation

NOTE

Information in the following applications sections is not part of the TI component specification, and TI does not warrant its accuracy or completeness. TI's customers are responsible for determining suitability of components for their purposes. Customers should validate and test their design implementation to confirm system functionality.

8.1 Application Information

The LMR23610-Q1 is a step down DC-to-DC regulator. It is typically used to convert a higher DC voltage to a lower DC voltage with a maximum output current of 1 A. The following design procedure can be used to select components for the LMR23610-Q1. Alternately, the WEBENCH® software may be used to generate complete designs. When generating a design, the WEBENCH® software utilizes iterative design procedure and accesses comprehensive databases of components. Please go to ti.com for more details.

8.2 Typical Applications

The LMR23610-Q1 only requires a few external components to convert from a wide voltage range supply to a fixed output voltage. Figure 21 shows a basic schematic.

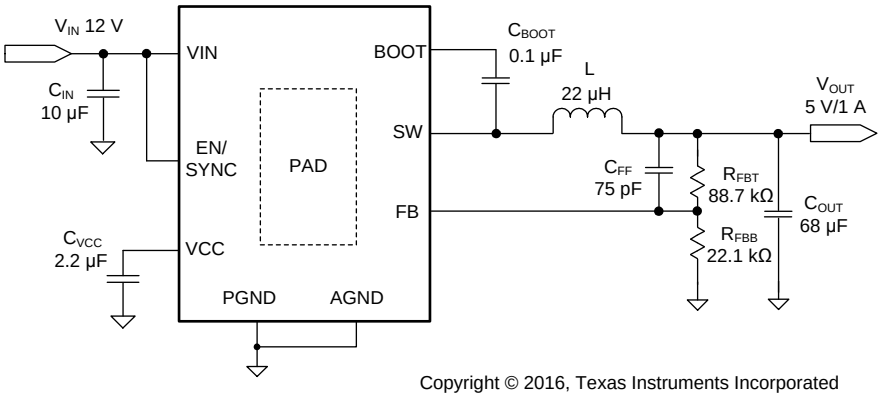

Figure 21. Application Circuit

The external components have to fulfill the needs of the application, but also the stability criteria of the device's control loop. Table 1 can be used to simplify the output filter component selection.

Table 1. L, C_{OUT} and C_{FF} Typical Values

f_{SW} (kHz)	V_{OUT} (V)	L (µH)	C_{OUT} (µF)	C_{FF} (pF)	R_{FBT} (kΩ)
400	3.3	15	82	100	51
400	5	22	68	75	88.7
400	12	47	33	See note (5)	243
400	24	47	22	See note (5)	510

1. Inductance value is calculated based on V_{IN} = 36 V.
2. All the C_{OUT} values are after derating. Add more when using ceramic capacitors.
3. R_{FBT} = 0 Ω for V_{OUT} = 1 V. R_{FBB} = 22.1 kΩ for all other V_{OUT} setting.
4. For designs with R_{FBT} other than recommended value, please adjust C_{FF} such that (C_{FF} × R_{FBT}) is unchanged and adjust R_{FBB} such that (R_{FBT} / R_{FBB}) is unchanged.
5. High ESR C_{OUT} will give enough phase boost and C_{FF} not needed.

8.2.1 Design Requirements

Detailed design procedure is described based on a design example. For this design example, use the parameters listed in Table 2 as the input parameters.

Copyright © 2016–2017, Texas Instruments Incorporated

Table 2. Design Example Parameters

Input Voltage, V_{IN}	12 V typical, range from 8 V to 28 V
Output Voltage, V_{OUT}	5 V
Maximum Output Current I_{O_MAX}	1 A
Transient Response 0.1 A to 1 A	5%
Output Voltage Ripple	50 mV
Input Voltage Ripple	400 mV
Switching Frequency f_{SW}	400 kHz

8.2.2 Detailed Design Procedure

8.2.2.1 Custom Design With WEBENCH® Tools

Click here to create a custom design using the LMR23610-Q1 device with the WEBENCH® Power Designer.

1. Start by entering the input voltage (V_{IN}), output voltage (V_{OUT}), and output current (I_{OUT}) requirements.
2. Optimize the design for key parameters such as efficiency, footprint, and cost using the optimizer dial.
3. Compare the generated design with other possible solutions from Texas Instruments.

The WEBENCH Power Designer provides a customized schematic along with a list of materials with real-time pricing and component availability.

In most cases, these actions are available:

- Run electrical simulations to see important waveforms and circuit performance
- Run thermal simulations to understand board thermal performance
- Export customized schematic and layout into popular CAD formats
- Print PDF reports for the design, and share the design with colleagues

Get more information about WEBENCH tools at www.ti.com/WEBENCH.

8.2.2.2 Output Voltage Set-Point

The output voltage of LMR23610-Q1 is externally adjustable using a resistor divider network. The divider network is comprised of top feedback resistor R_{FBT} and bottom feedback resistor R_{FBB}. Equation 10 is used to determine the output voltage:

$$R_{FBT} = \frac{V_{OUT} - V_{REF}}{V_{REF}} \times R_{FBB} \tag{10}$$

Choose the value of R_{FBB} to be 22.1 kΩ. With the desired output voltage set to 5 V and the V_{REF} = 1.0 V, the R_{FBB} value can then be calculated using Equation 10. The formula yields to a value 88.7 kΩ.

8.2.2.3 Switching Frequency

The default switching frequency of the LMR23610-Q1 is 400 kHz. For other switching frequency, the device must be synchronized to an external clock, please refer to Enable/Sync for more details.

8.2.2.4 Inductor Selection

The most critical parameters for the inductor are the inductance, saturation current and the rated current. The inductance is based on the desired peak-to-peak ripple current Δi_L. Since the ripple current increases with the input voltage, the maximum input voltage is always used to calculate the minimum inductance L_{MIN}. Use Equation 12 to calculate the minimum value of the output inductor. K_{IND} is a coefficient that represents the amount of inductor ripple current relative to the maximum output current of the device. A reasonable value of K_{IND} should be 30% to 50%. During an instantaneous short or over current operation event, the RMS and peak inductor current can be high. The inductor current rating should be higher than the current limit of the device.

$$\Delta i_L = \frac{V_{OUT} \times \left(V_{IN_MAX} - V_{OUT}\right)}{V_{IN_MAX} \times L \times f_{SW}} \tag{11}$$

$$L_{MIN} = \frac{V_{IN_MAX} - V_{OUT}}{I_{OUT} \times K_{IND}} \times \frac{V_{OUT}}{V_{IN_MAX} \times f_{SW}} \tag{12}$$

In general, it is preferable to choose lower inductance in switching power supplies, because it usually corresponds to faster transient response, smaller DCR, and reduced size for more compact designs. But too low of an inductance can generate too large of an inductor current ripple such that over current protection at the full load could be falsely triggered. It also generates more conduction loss and inductor core loss. Larger inductor current ripple also implies larger output voltage ripple with same output capacitors. With peak current mode control, it is not recommended to have too small of an inductor current ripple. A larger peak current ripple improves the comparator signal to noise ratio.

For this design example, choose K_{IND} = 0.5, the minimum inductor value is calculated to be 20.5 µH. Choose the nearest standard 22 µH ferrite inductor with a capability of 2 A RMS current and 2.5 A saturation current.

8.2.2.5 Output Capacitor Selection

The output capacitor(s), C_{OUT}, should be chosen with care since it directly affects the steady state output voltage ripple, loop stability and the voltage over/undershoot during load current transients.

The output ripple is essentially composed of two parts. One is caused by the inductor current ripple going through the Equivalent Series Resistance (ESR) of the output capacitors:

$$\Delta V_{OUT_ESR} = \Delta i_L \times ESR = K_{IND} \times I_{OUT} \times ESR \tag{13}$$

The other is caused by the inductor current ripple charging and discharging the output capacitors:

$$\Delta V_{OUT_C} = \frac{\Delta i_L}{(8 \times f_{SW} \times C_{OUT})} = \frac{K_{IND} \times I_{OUT}}{(8 \times f_{SW} \times C_{OUT})} \tag{14}$$

The two components in the voltage ripple are not in phase, so the actual peak-to-peak ripple is smaller than the sum of two peaks.

Output capacitance is usually limited by transient performance specifications if the system requires tight voltage regulation with presence of large current steps and fast slew rate. When a fast large load increase happens, output capacitors provide the required charge before the inductor current can slew up to the appropriate level. The regulator's control loop usually needs six or more clock cycles to respond to the output voltage droop. The output capacitance must be large enough to supply the current difference for six clock cycles to maintain the output voltage within the specified range. Equation 15 shows the minimum output capacitance needed for specified output undershoot. When a sudden large load decrease happens, the output capacitors absorb energy stored in the inductor. which results in an output voltage overshoot. Equation 16 calculates the minimum capacitance required to keep the voltage overshoot within a specified range.

$$C_{OUT} > \frac{6 \times (I_{OH} - I_{OL})}{f_{SW} \times V_{US}} \tag{15}$$

$$C_{OUT} > \frac{I_{OH}^2 - I_{OL}^2}{(V_{OUT} \times V_{OS})^2 - V_{OUT}^2} \times L \tag{16}$$

where

- K_{IND} = Ripple ratio of the inductor ripple current (Δi_L / I_{OUT})
- I_{OL} = Low level output current during load transient
- I_{OH} = High level output current during load transient
- V_{US} = Target output voltage undershoot
- V_{OS} = Target output voltage overshoot

For this design example, the target output ripple is 50 mV. Presuppose ΔV_{OUT_ESR} = ΔV_{OUT_C} = 50 mV, and chose K_{IND} = 0.5. Equation 13 yields ESR no larger than 100 mΩ and Equation 14 yields C_{OUT} no smaller than 3.1 µF. For the target over/undershoot range of this design, V_{US} = V_{OS} = 5% × V_{OUT} = 250 mV. The C_{OUT} can be calculated to be no smaller than 54 µF and 8.5 µF by Equation 15 and Equation 16 respectively. Consider of derating, one 82 µF, 16 V ceramic capacitor with 5 mΩ ESR is used.

Copyright © 2016–2017, Texas Instruments Incorporated

8.2.2.6 Feed-Forward Capacitor

The LMR23610-Q1 is internally compensated. Depending on the V_{OUT} and frequency f_{SW}, if the output capacitor C_{OUT} is dominated by low ESR (ceramic types) capacitors, it could result in low phase margin. To improve the phase boost an external feedforward capacitor C_{FF} can be added in parallel with R_{FBT}. C_{FF} is chosen such that phase margin is boosted at the crossover frequency without C_{FF}. A simple estimation for the crossover frequency (f_X) without C_{FF} is shown in Equation 17, assuming C_{OUT} has very small ESR, and C_{OUT} value is after derating.

$$f_X = \frac{8.32}{V_{OUT} \times C_{OUT}} \tag{17}$$

The following equation for C_{FF} was tested:

$$C_{FF} = \frac{1}{2\pi \times f_X \times R_{FBT}} \tag{18}$$

For designs with higher ESR, C_{FF} is not needed when C_{OUT} has very high ESR and C_{FF} calculated from Equation 18 should be reduced with medium ESR. Table 1 can be used as a quick starting point.

For the application in this design example, a 75 pF, 50 V, COG capacitor is selected.

8.2.2.7 Input Capacitor Selection

The LMR23610-Q1 device requires high frequency input decoupling capacitor(s) and a bulk input capacitor, depending on the application. The typical recommended value for the high frequency decoupling capacitor is 4.7 µF to 10 µF. A high-quality ceramic capacitor type X5R or X7R with sufficiency voltage rating is recommended. To compensate the derating of ceramic capacitors, a voltage rating of twice the maximum input voltage is recommended. Additionally, some bulk capacitance can be required, especially if the LMR23610-Q1 circuit is not located within approximately 5 cm from the input voltage source. This capacitor is used to provide damping to the voltage spike due to the lead inductance of the cable or the trace. For this design, two 4.7 µF, 50 V, X7R ceramic capacitors are used. A 0.1 µF for high-frequency filtering and place it as close as possible to the device pins.

8.2.2.8 Bootstrap Capacitor Selection

Every LMR23610-Q1 design requires a bootstrap capacitor (C_{BOOT}). The recommended capacitor is 0.1 µF and rated 16 V or higher. The bootstrap capacitor is located between the SW pin and the BOOT pin. The bootstrap capacitor must be a high-quality ceramic type with an X7R or X5R grade dielectric for temperature stability.

8.2.2.9 VCC Capacitor Selection

The VCC pin is the output of an internal LDO for LMR23610-Q1. To insure stability of the device, place a minimum of 2.2 µF, 16 V, X7R capacitor from this pin to ground.

8.2.2.10 Under Voltage Lockout Set-Point

The system undervoltage lockout (UVLO) is adjusted using the external voltage divider network of R_{ENT} and R_{ENB}. The UVLO has two thresholds, one for power up when the input voltage is rising and one for power down or brown outs when the input voltage is falling. The following equation can be used to determine the V_{IN} UVLO level.

$$V_{IN_RISING} = V_{ENH} \times \frac{R_{ENT} + R_{ENB}}{R_{ENB}} \tag{19}$$

The EN rising threshold (V_{ENH}) for LMR23610-Q1 is set to be 1.55 V (typ). Choose the value of R_{ENB} to be 287 kΩ to minimize input current from the supply. If the desired V_{IN} UVLO level is at 6.0 V, then the value of R_{ENT} can be calculated using the equation below:

$$R_{ENT} = \left(\frac{V_{IN_RISING}}{V_{ENH}} - 1\right) \times R_{ENB} \tag{20}$$

The above equation yields a value of 820 kΩ. The resulting falling UVLO threshold, equals 4.4 V, can be calculated by below equation, where EN hysteresis (V_{EN_HYS}) is 0.4 V (typ).

$$V_{IN_FALLING} = \left(V_{ENH} - V_{EN_HYS}\right) \times \frac{R_{ENT} + R_{ENB}}{R_{ENB}} \tag{21}$$

8.2.3 Application Curves

Unless otherwise specified the following conditions apply: V_{IN} = 12 V, f_{SW} = 400 kHz, L = 22 µH, C_{OUT} = 47 µF × 2, T_A = 25 °C.

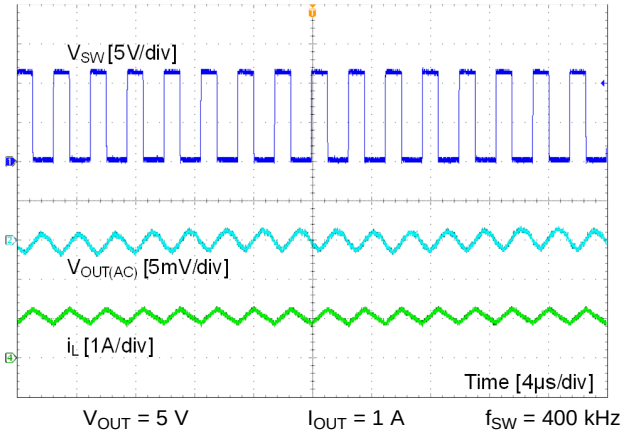

Figure 22. CCM Mode

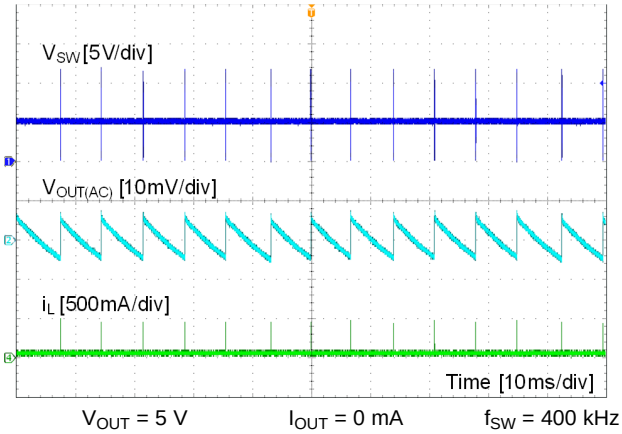

Figure 23. PFM Mode

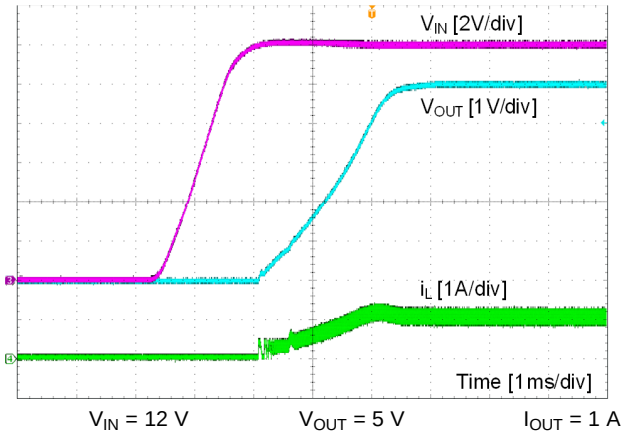

Figure 24. Start Up by V_{IN}

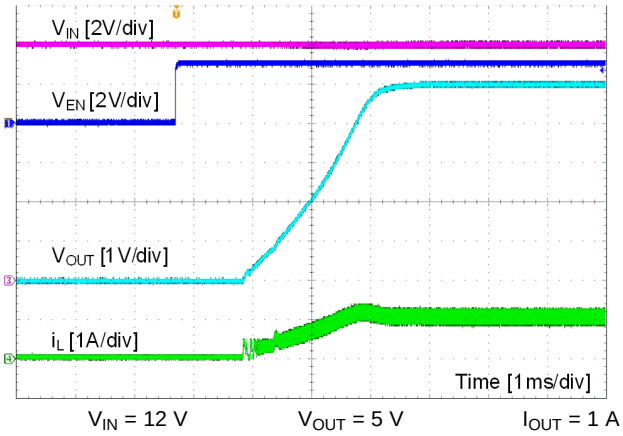

Figure 25. Start Up by EN

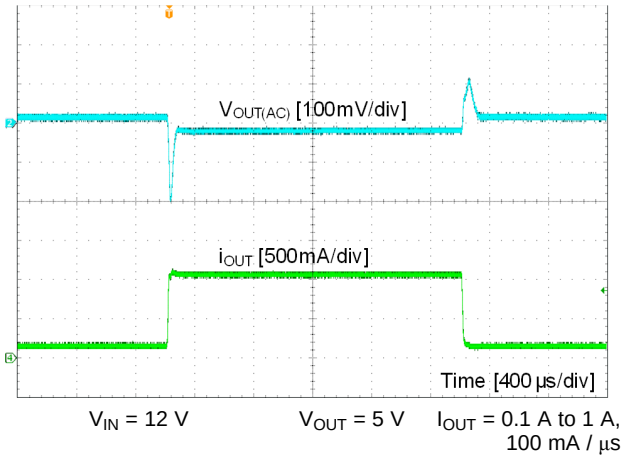

Figure 26. Load Transient

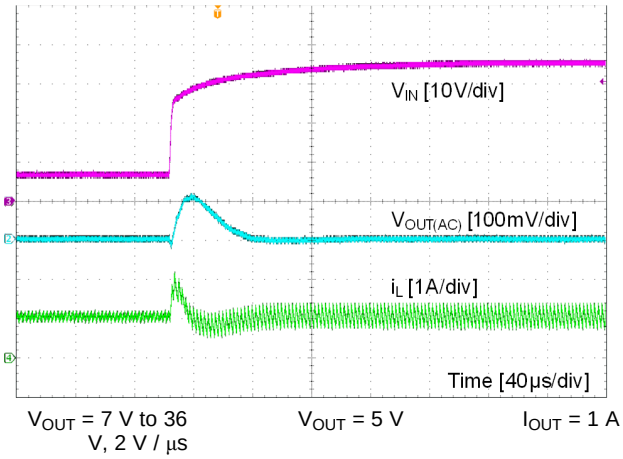

Figure 27. Line Transient

Copyright © 2016–2017, Texas Instruments Incorporated

Unless otherwise specified the following conditions apply: V_{IN} = 12 V, f_{SW} = 400 kHz, L = 22 µH, C_{OUT} = 47 µF × 2, T_A = 25 °C.

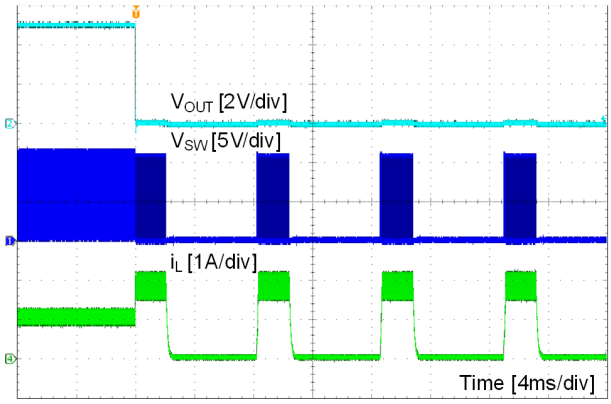

V_{OUT} = 5 V I_{OUT} = 1 A to short

Figure 28. Short Protection

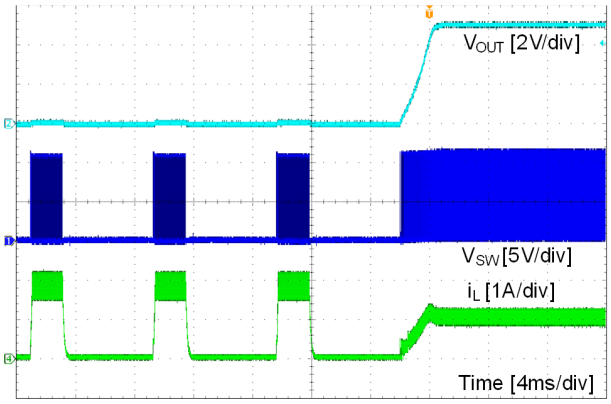

V_{OUT} = 5 V I_{OUT} = short to 1 A

Figure 29. Short Recovery

9 Power Supply Recommendations

The LMR23610-Q1 is designed to operate from an input voltage supply range between 4 V and 36 V. This input supply should be able to withstand the maximum input current and maintain a stable voltage. The resistance of the input supply rail should be low enough that an input current transient does not cause a high enough drop at the LMR23610-Q1 supply voltage that can cause a false UVLO fault triggering and system reset. If the input supply is located more than a few inches from the LMR23610-Q1, additional bulk capacitance may be required in addition to the ceramic input capacitors. The amount of bulk capacitance is not critical, but a 47 μF or 100 μF electrolytic capacitor is a typical choice.

10 Layout

10.1 Layout Guidelines

Layout is a critical portion of good power supply design. The following guidelines will help users design a PCB with the best power conversion performance, thermal performance, and minimized generation of unwanted EMI.

1. The input bypass capacitor C_{IN} must be placed as close as possible to the VIN and PGND pins. Grounding for both the input and output capacitors should consist of localized top side planes that connect to the PGND pin and PAD.
2. Place bypass capacitors for V_{CC} close to the VCC pin and ground the bypass capacitor to device ground.
3. Minimize trace length to the FB pin net. Both feedback resistors, R_{FBT} and R_{FBB} should be located close to the FB pin. Place C_{FF} directly in parallel with R_{FBT}. If V_{OUT} accuracy at the load is important, make sure V_{OUT} sense is made at the load. Route V_{OUT} sense path away from noisy nodes and preferably through a layer on the other side of a shielded layer.
4. Use ground plane in one of the middle layers as noise shielding and heat dissipation path.
5. Have a single point ground connection to the plane. The ground connections for the feedback and enable components should be routed to the ground plane. This prevents any switched or load currents from flowing in the analog ground traces. If not properly handled, poor grounding can result in degraded load regulation or erratic output voltage ripple behavior.
6. Make V_{IN}, V_{OUT} and ground bus connections as wide as possible. This reduces any voltage drops on the input or output paths of the converter and maximizes efficiency.
7. Provide adequate device heat-sinking. Use an array of heat-sinking vias to connect the exposed pad to the ground plane on the bottom PCB layer. If the PCB has multiple copper layers, these thermal vias can also be connected to inner layer heat-spreading ground planes. Ensure enough copper area is used for heat-sinking to keep the junction temperature below 125 °C.

10.2 Compact Layout for EMI Reduction

Radiated EMI is generated by the high di/dt components in pulsing currents in switching converters. The larger area covered by the path of a pulsing current, the more EMI is generated. High frequency ceramic bypass capacitors at the input side provide primary path for the high di/dt components of the pulsing current. Placing ceramic bypass capacitor(s) as close as possible to the VIN and PGND pins is the key to EMI reduction.

The SW pin connecting to the inductor should be as short as possible, and just wide enough to carry the load current without excessive heating. Short, thick traces or copper pours (shapes) should be used for high current conduction path to minimize parasitic resistance. The output capacitors should be placed close to the V_{OUT} end of the inductor and closely grounded to PGND pin and exposed PAD.

The bypass capacitors on VCC should be placed as close as possible to the pin and closely grounded to PGND and the exposed PAD.

Copyright © 2016–2017, Texas Instruments Incorporated

10.3 Ground Plane and Thermal Considerations

It is recommended to use one of the middle layers as a solid ground plane. Ground plane provides shielding for sensitive circuits and traces. It also provides a quiet reference potential for the control circuitry. The AGND and PGND pins should be connected to the ground plane using vias right next to the bypass capacitors. PGND pin is connected to the source of the internal LS switch. They should be connected directly to the grounds of the input and output capacitors. The PGND net contains noise at switching frequency and may bounce due to load variations. PGND trace, as well as VIN and SW traces, should be constrained to one side of the ground plane. The other side of the ground plane contains much less noise and should be used for sensitive routes.

It is recommended to provide adequate device heat sinking by utilizing the PAD of the IC as the primary thermal path. Use a minimum 4 by 2 array of 12 mil thermal vias to connect the PAD to the system ground plane heat sink. The vias should be evenly distributed under the PAD. Use as much copper as possible, for system ground plane, on the top and bottom layers for the best heat dissipation. Use a four-layer board with the copper thickness for the four layers, starting from the top of, 2 oz / 1 oz / 1 oz / 2 oz. Four layer boards with enough copper thickness provides low current conduction impedance, proper shielding and lower thermal resistance.

The thermal characteristics of the LMR23610-Q1 are specified using the parameter θ_{JA}, which characterize the junction temperature of silicon to the ambient temperature in a specific system. Although the value of θ_{JA} is dependent on many variables, it still can be used to approximate the operating junction temperature of the device. To obtain an estimate of the device junction temperature, one may use the following relationship:

$$T_J = P_D \times \theta_{JA} + T_A \tag{22}$$

where

T_J = Junction temperature in °C

$P_D = V_{IN} \times I_{IN} \times (1 - \text{Efficiency}) - 1.1 \times I_{OUT}^2 \times \text{DCR}$ in Watt

DCR = Inductor DC parasitic resistance in Ω

θ_{JA} = Junction to ambient thermal resistance of the device in °C/W

T_A = Ambient temperature in °C

The maximum operating junction temperature of the LMR23610-Q1 is 125 °C. θ_{JA} is highly related to PCB size and layout, as well as environmental factors such as heat sinking and air flow.

10.4 Feedback Resistors

To reduce noise sensitivity of the output voltage feedback path, it is important to place the resistor divider and C_{FF} close to the FB pin, rather than close to the load. The FB pin is the input to the error amplifier, so it is a high impedance node and very sensitive to noise. Placing the resistor divider and C_{FF} closer to the FB pin reduces the trace length of FB signal and reduces noise coupling. The output node is a low impedance node, so the trace from V_{OUT} to the resistor divider can be long if short path is not available.

If voltage accuracy at the load is important, make sure voltage sense is made at the load. Doing so will correct for voltage drops along the traces and provide the best output accuracy. The voltage sense trace from the load to the feedback resistor divider should be routed away from the SW node path and the inductor to avoid contaminating the feedback signal with switch noise, while also minimizing the trace length. This is most important when high value resistors are used to set the output voltage. It is recommended to route the voltage sense trace and place the resistor divider on a different layer than the inductor and SW node path, such that there is a ground plane in between the feedback trace and inductor/SW node polygon. This provides further shielding for the voltage feedback path from EMI noises.

Copyright © 2016–2017, Texas Instruments Incorporated

10.5 Layout Example

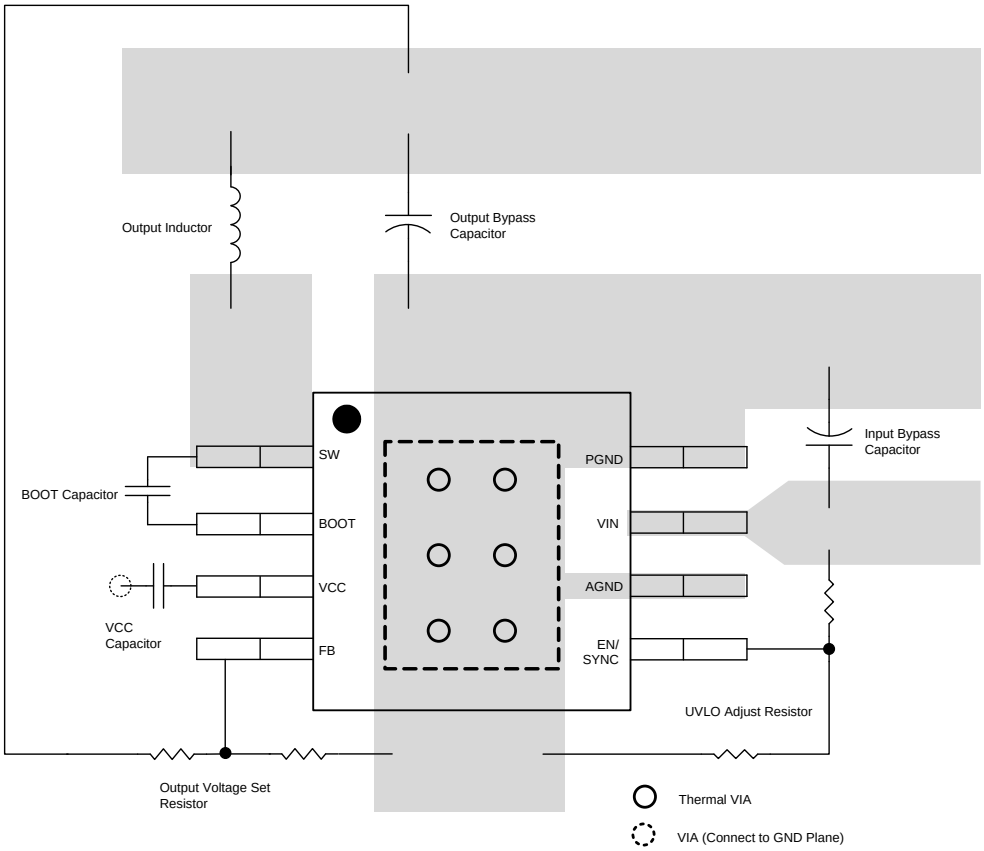

Figure 30. Layout

Copyright © 2016–2017, Texas Instruments Incorporated

11 Device and Documentation Support

11.1 Custom Design With WEBENCH® Tools

Click here to create a custom design using the LMR23610-Q1 device with the WEBENCH® Power Designer.

1. Start by entering the input voltage (V_{IN}), output voltage (V_{OUT}), and output current (I_{OUT}) requirements.
2. Optimize the design for key parameters such as efficiency, footprint, and cost using the optimizer dial.
3. Compare the generated design with other possible solutions from Texas Instruments.

The WEBENCH Power Designer provides a customized schematic along with a list of materials with real-time pricing and component availability.

In most cases, these actions are available:

- Run electrical simulations to see important waveforms and circuit performance
- Run thermal simulations to understand board thermal performance
- Export customized schematic and layout into popular CAD formats
- Print PDF reports for the design, and share the design with colleagues

Get more information about WEBENCH tools at www.ti.com/WEBENCH.

11.2 Receiving Notification of Documentation Updates

To receive notification of documentation updates, navigate to the device product folder on ti.com. In the upper right corner, click on *Alert me* to register and receive a weekly digest of any product information that has changed. For change details, review the revision history included in any revised document.

11.3 Community Resources

The following links connect to TI community resources. Linked contents are provided "AS IS" by the respective contributors. They do not constitute TI specifications and do not necessarily reflect TI's views; see TI's Terms of Use.

TI E2E™ Online Community ***TI's Engineer-to-Engineer (E2E) Community.*** Created to foster collaboration among engineers. At e2e.ti.com, you can ask questions, share knowledge, explore ideas and help solve problems with fellow engineers.

Design Support ***TI's Design Support*** Quickly find helpful E2E forums along with design support tools and contact information for technical support.

11.4 Trademarks

PowerPAD, E2E are trademarks of Texas Instruments.
WEBENCH, SIMPLE SWITCHER are registered trademarks of Texas Instruments.

11.5 Electrostatic Discharge Caution

These devices have limited built-in ESD protection. The leads should be shorted together or the device placed in conductive foam during storage or handling to prevent electrostatic damage to the MOS gates.

11.6 Glossary

SLYZ022 — *TI Glossary*.

This glossary lists and explains terms, acronyms, and definitions.

12 Mechanical, Packaging, and Orderable Information

The following pages include mechanical, packaging, and orderable information. This information is the most current data available for the designated devices. This data is subject to change without notice and revision of this document. For browser-based versions of this data sheet, refer to the left-hand navigation.

Copyright © 2016–2017, Texas Instruments Incorporated

MECHANICAL DATA

DDA (R–PDSO–G8) PowerPAD™ PLASTIC SMALL–OUTLINE

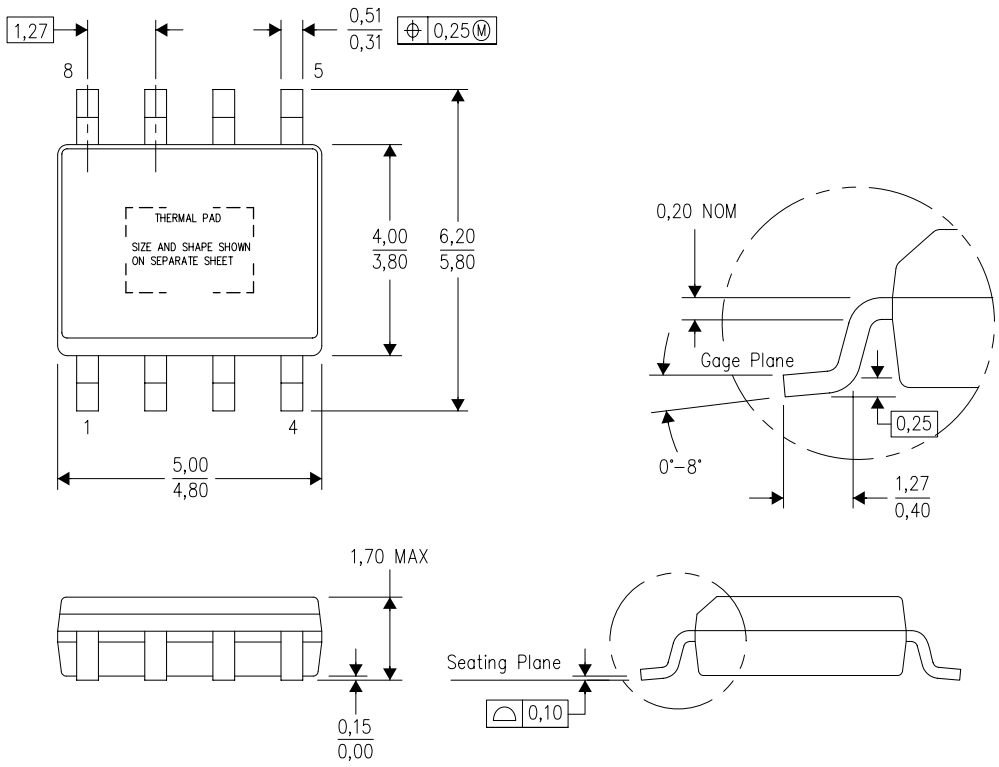

NOTES:
A. All linear dimensions are in millimeters. Dimensioning and tolerancing per ASME Y14.5–1994.
B. This drawing is subject to change without notice.
C. Body dimensions do not include mold flash or protrusion not to exceed 0,15.
D. This package is designed to be soldered to a thermal pad on the board. Refer to Technical Brief, PowerPad Thermally Enhanced Package, Texas Instruments Literature No. SLMA002 for information regarding recommended board layout. This document is available at www.ti.com <http://www.ti.com>.
E. See the additional figure in the Product Data Sheet for details regarding the exposed thermal pad features and dimensions.
F. This package complies to JEDEC MS–012 variation BA

PowerPAD is a trademark of Texas Instruments.

Copyright © 2016–2017, Texas Instruments Incorporated

PACKAGING INFORMATION

Orderable Device	Status (1)	Package Type	Package Drawing	Pins	Package Qty	Eco Plan (2)	Lead finish/ Ball material (6)	MSL Peak Temp (3)	Op Temp (°C)	Device Marking (4/5)	Samples
LMR23610AQDDAQ1	ACTIVE	SO PowerPAD	DDA	8	75	RoHS & Green	NIPDAUAG	Level-2-260C-1 YEAR	-40 to 125	F10AQ	Samples
LMR23610AQDDARQ1	ACTIVE	SO PowerPAD	DDA	8	2500	RoHS & Green	NIPDAUAG	Level-2-260C-1 YEAR	-40 to 125	F10AQ	Samples

(1) The marketing status values are defined as follows:
ACTIVE: Product device recommended for new designs.
LIFEBUY: TI has announced that the device will be discontinued, and a lifetime-buy period is in effect.
NRND: Not recommended for new designs. Device is in production to support existing customers, but TI does not recommend using this part in a new design.
PREVIEW: Device has been announced but is not in production. Samples may or may not be available.
OBSOLETE: TI has discontinued the production of the device.

(2) **RoHS:** TI defines "RoHS" to mean semiconductor products that are compliant with the current EU RoHS requirements for all 10 RoHS substances, including the requirement that RoHS substance do not exceed 0.1% by weight in homogeneous materials. Where designed to be soldered at high temperatures, "RoHS" products are suitable for use in specified lead-free processes. TI may reference these types of products as "Pb-Free".
RoHS Exempt: TI defines "RoHS Exempt" to mean products that contain lead but are compliant with EU RoHS pursuant to a specific EU RoHS exemption.
Green: TI defines "Green" to mean the content of Chlorine (Cl) and Bromine (Br) based flame retardants meet JS709B low halogen requirements of <=1000ppm threshold. Antimony trioxide based flame retardants must also meet the <=1000ppm threshold requirement.

(3) MSL, Peak Temp. - The Moisture Sensitivity Level rating according to the JEDEC industry standard classifications, and peak solder temperature.

(4) There may be additional marking, which relates to the logo, the lot trace code information, or the environmental category on the device.

(5) Multiple Device Markings will be inside parentheses. Only one Device Marking contained in parentheses and separated by a "~" will appear on a device. If a line is indented then it is a continuation of the previous line and the two combined represent the entire Device Marking for that device.

(6) Lead finish/Ball material - Orderable Devices may have multiple material finish options. Finish options are separated by a vertical ruled line. Lead finish/Ball material values may wrap to two lines if the finish value exceeds the maximum column width.

Important Information and Disclaimer: The information provided on this page represents TI's knowledge and belief as of the date that it is provided. TI bases its knowledge and belief on information provided by third parties, and makes no representation or warranty as to the accuracy of such information. Efforts are underway to better integrate information from third parties. TI has taken and continues to take reasonable steps to provide representative and accurate information but may not have conducted destructive testing or chemical analysis on incoming materials and chemicals. TI and TI suppliers consider certain information to be proprietary, and thus CAS numbers and other limited information may not be available for release.

In no event shall TI's liability arising out of such information exceed the total purchase price of the TI part(s) at issue in this document sold by TI to Customer on an annual basis.

OTHER QUALIFIED VERSIONS OF LMR23610-Q1 :

- Catalog: LMR23610

NOTE: Qualified Version Definitions:

- Catalog - TI's standard catalog product

TAPE AND REEL INFORMATION

REEL DIMENSIONS

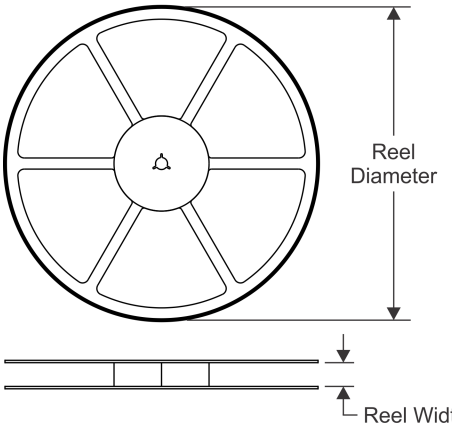

TAPE DIMENSIONS

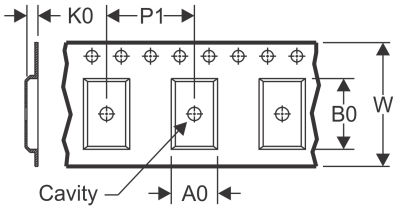

A0	Dimension designed to accommodate the component width
B0	Dimension designed to accommodate the component length
K0	Dimension designed to accommodate the component thickness
W	Overall width of the carrier tape
P1	Pitch between successive cavity centers

QUADRANT ASSIGNMENTS FOR PIN 1 ORIENTATION IN TAPE

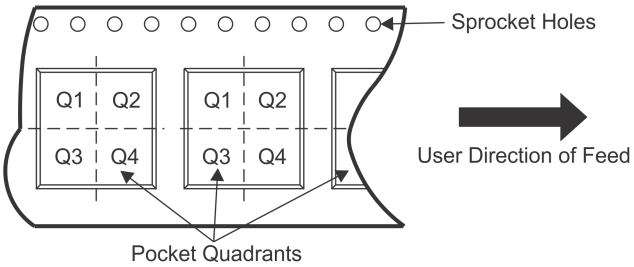

*All dimensions are nominal

Device	Package Type	Package Drawing	Pins	SPQ	Reel Diameter (mm)	Reel Width W1 (mm)	A0 (mm)	B0 (mm)	K0 (mm)	P1 (mm)	W (mm)	Pin1 Quadrant
LMR23610AQDDARQ1	SO Power PAD	DDA	8	2500	330.0	12.8	6.4	5.2	2.1	8.0	12.0	Q1

TAPE AND REEL BOX DIMENSIONS

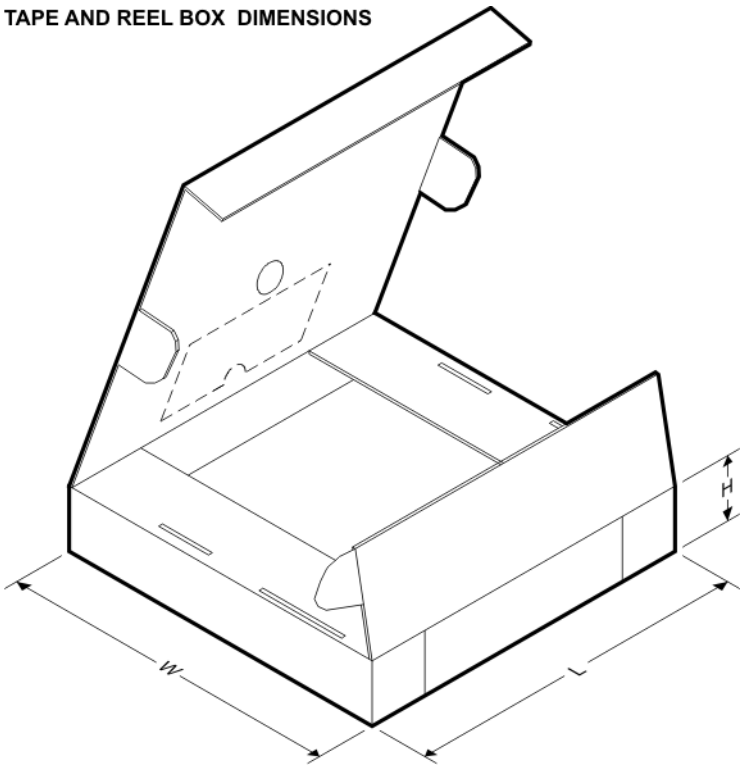

*All dimensions are nominal

Device	Package Type	Package Drawing	Pins	SPQ	Length (mm)	Width (mm)	Height (mm)
LMR23610AQDDARQ1	SO PowerPAD	DDA	8	2500	366.0	364.0	50.0

TUBE

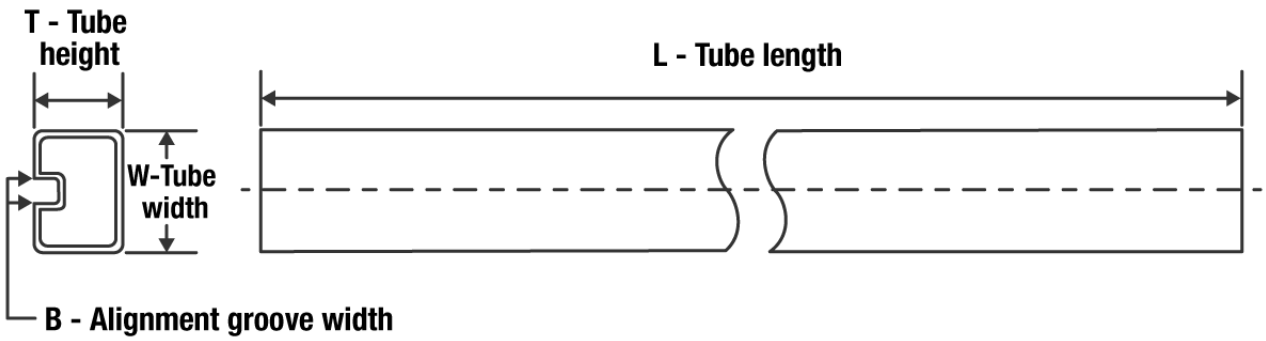

*All dimensions are nominal

Device	Package Name	Package Type	Pins	SPQ	L (mm)	W (mm)	T (µm)	B (mm)
LMR23610AQDDAQ1	DDA	HSOIC	8	75	517	7.87	635	4.25

DDA (R-PDSO-G8) PowerPAD™ PLASTIC SMALL-OUTLINE

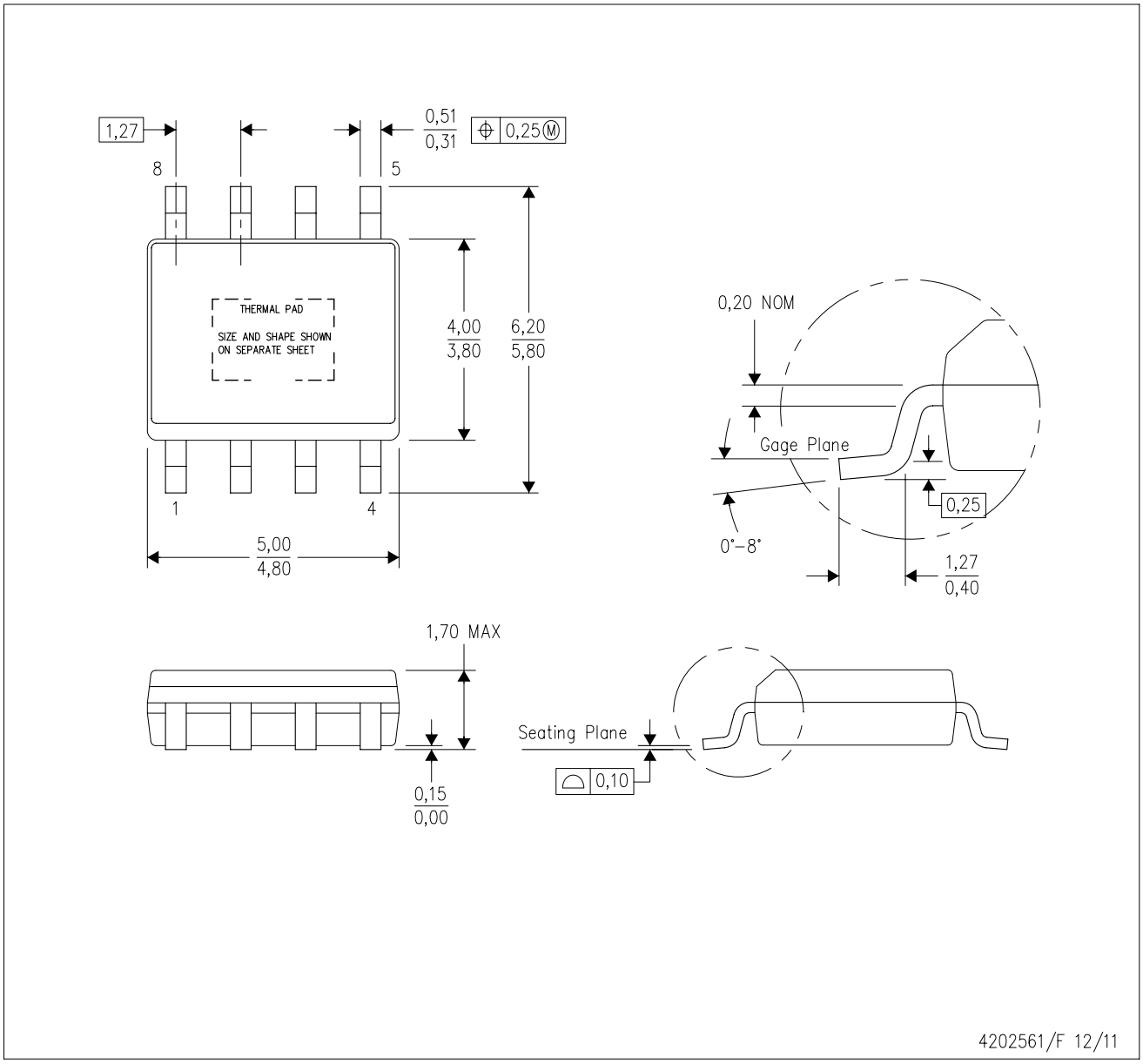

NOTES:
A. All linear dimensions are in millimeters. Dimensioning and tolerancing per ASME Y14.5–1994.
B. This drawing is subject to change without notice.
C. Body dimensions do not include mold flash or protrusion not to exceed 0,15.
D. This package is designed to be soldered to a thermal pad on the board. Refer to Technical Brief, PowerPad Thermally Enhanced Package, Texas Instruments Literature No. SLMA002 for information regarding recommended board layout. This document is available at www.ti.com <http://www.ti.com>.
E. See the additional figure in the Product Data Sheet for details regarding the exposed thermal pad features and dimensions.
F. This package complies to JEDEC MS-012 variation BA

PowerPAD is a trademark of Texas Instruments.

DDA (R-PDSO-G8) PowerPAD™ PLASTIC SMALL OUTLINE

THERMAL INFORMATION

This PowerPAD™ package incorporates an exposed thermal pad that is designed to be attached to a printed circuit board (PCB). The thermal pad must be soldered directly to the PCB. After soldering, the PCB can be used as a heatsink. In addition, through the use of thermal vias, the thermal pad can be attached directly to the appropriate copper plane shown in the electrical schematic for the device, or alternatively, can be attached to a special heatsink structure designed into the PCB. This design optimizes the heat transfer from the integrated circuit (IC).

For additional information on the PowerPAD package and how to take advantage of its heat dissipating abilities, refer to Technical Brief, PowerPAD Thermally Enhanced Package, Texas Instruments Literature No. SLMA002 and Application Brief, PowerPAD Made Easy, Texas Instruments Literature No. SLMA004. Both documents are available at www.ti.com.

The exposed thermal pad dimensions for this package are shown in the following illustration.

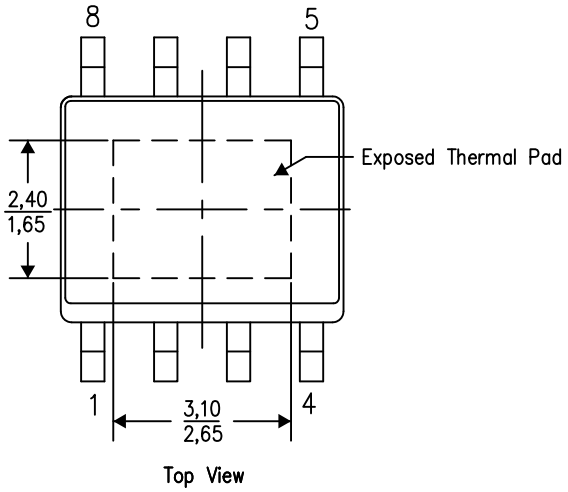

Exposed Thermal Pad Dimensions

4206322-6/L 05/12

NOTE: A. All linear dimensions are in millimeters

PowerPAD is a trademark of Texas Instruments

DDA (R–PDSO–G8) PowerPAD™ PLASTIC SMALL OUTLINE

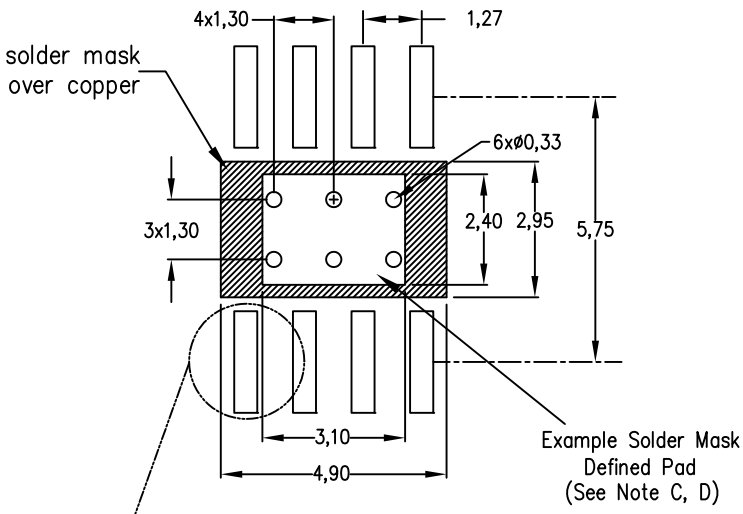

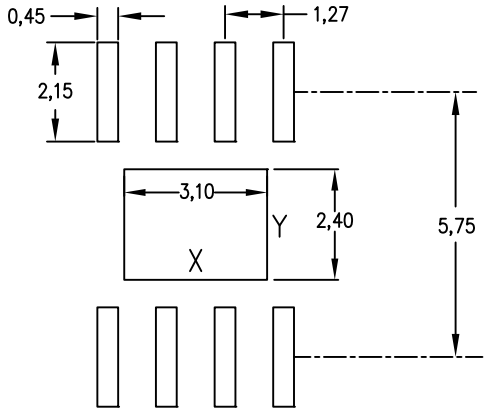

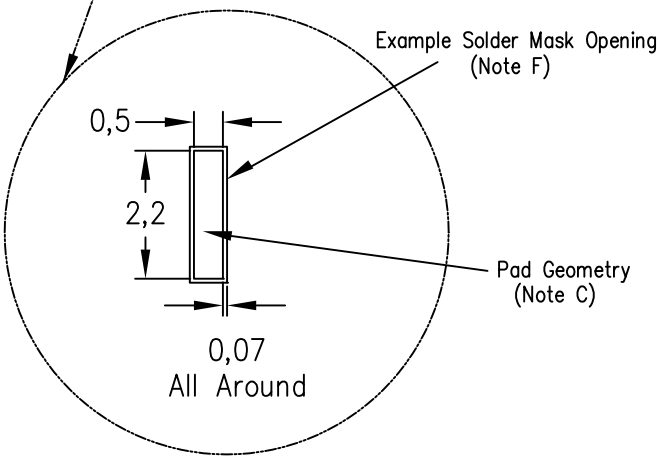

Center Power Pad Solder Stencil Opening		
Stencil Thickness	X	Y
0.1mm	3.3	2.6
0.127mm	3.1	2.4
0.152mm	2.9	2.2
0.178mm	2.8	2.1

4208951–6/D 04/12

NOTES:
A. All linear dimensions are in millimeters.
B. This drawing is subject to change without notice.
C. Publication IPC–7351 is recommended for alternate designs.
D. This package is designed to be soldered to a thermal pad on the board. Refer to Technical Brief, PowerPad Thermally Enhanced Package, Texas Instruments Literature No. SLMA002, SLMA004, and also the Product Data Sheets for specific thermal information, via requirements, and recommended board layout. These documents are available at www.ti.com <http://www.ti.com>. Publication IPC–7351 is recommended for alternate designs.
E. Laser cutting apertures with trapezoidal walls and also rounding corners will offer better paste release. Customers should contact their board assembly site for stencil design recommendations. Example stencil design based on a 50% volumetric metal load solder paste. Refer to IPC–7525 for other stencil recommendations.
F. Customers should contact their board fabrication site for solder mask tolerances between and around signal pads.

PowerPAD is a trademark of Texas Instruments.

IMPORTANT NOTICE AND DISCLAIMER

TI PROVIDES TECHNICAL AND RELIABILITY DATA (INCLUDING DATA SHEETS), DESIGN RESOURCES (INCLUDING REFERENCE DESIGNS), APPLICATION OR OTHER DESIGN ADVICE, WEB TOOLS, SAFETY INFORMATION, AND OTHER RESOURCES “AS IS” AND WITH ALL FAULTS, AND DISCLAIMS ALL WARRANTIES, EXPRESS AND IMPLIED, INCLUDING WITHOUT LIMITATION ANY IMPLIED WARRANTIES OF MERCHANTABILITY, FITNESS FOR A PARTICULAR PURPOSE OR NON-INFRINGEMENT OF THIRD PARTY INTELLECTUAL PROPERTY RIGHTS.

These resources are intended for skilled developers designing with TI products. You are solely responsible for (1) selecting the appropriate TI products for your application, (2) designing, validating and testing your application, and (3) ensuring your application meets applicable standards, and any other safety, security, regulatory or other requirements.

These resources are subject to change without notice. TI grants you permission to use these resources only for development of an application that uses the TI products described in the resource. Other reproduction and display of these resources is prohibited. No license is granted to any other TI intellectual property right or to any third party intellectual property right. TI disclaims responsibility for, and you will fully indemnify TI and its representatives against, any claims, damages, costs, losses, and liabilities arising out of your use of these resources.

TI’s products are provided subject to TI’s Terms of Sale or other applicable terms available either on ti.com or provided in conjunction with such TI products. TI’s provision of these resources does not expand or otherwise alter TI’s applicable warranties or warranty disclaimers for TI products.

TI objects to and rejects any additional or different terms you may have proposed.

Mailing Address: Texas Instruments, Post Office Box 655303, Dallas, Texas 75265
Copyright © 2022, Texas Instruments Incorporated