TLV702-Q1 300mA、低 I_Q、低压降稳压器

1 特性

- 符合汽车应用 应用
- 具有符合 AEC-Q100 的下列结果：
  - 器件温度 1 级：-40°C 至 125°C 的环境运行温度范围
  - 器件人体放电模型 (HBM) 静电防护 (ESD) 分类等级 H2
  - 器件 CDM ESD 分类等级 C4B
- 极低压降：
  - 在 $I_{输出}$ = 50mA 并且 $V_{输出}$ = 2.8V 时，为 37mV
  - 在 $I_{输出}$ = 100mA 并且 $V_{输出}$ = 2.8V 时，为 75mV
  - 在 $I_{输出}$ = 300mA 并且 $V_{输出}$ = 2.8V 时，为 220mV
- 在工作温度范围内，精度为 2%
- 低 I_Q：35µA
- 可提供从 1.2V 至 4.8V 的固定输出电压组合
- 高电源抑制比 (PSRR)：频率 1kHz 时为 68dB
- 与 0.1µF(1) 有效电容一起工作时保持稳定
- 热关断及过流保护
- 封装：5 引脚 SOT（DBV 和 DDC）和 1.5mm ×1.5mm、6 引脚 WSON

(1) 请参阅*应用信息* 部分中的*输入和输出电容器要求*。

2 应用

- 汽车摄像机模块
- 图像传感器电源
- 微处理器轨
- 汽车信息娱乐音响主机
- 汽车车身电子设备

3 说明

TLV702-Q1 系列低压降 (LDO) 线性稳压器是具有出色 Line transient 和 load transient性能的低静态电流器件。这些 LDO 专为功耗敏感型 应用而设计。

一个高精度频带隙和一个误差放大器提供 2% 的总精度。此系列器件具有低输出噪声、极高电源抑制比 (PSRR) 和低压降电压，因此是各种电池供电设备的理想选择。所有器件版本均具有热关断和电流限制保护以保证安全。

此外，这些器件还能在采用仅 0.1µF 的有效输出电容时保持稳定。这一特性允许使用具有较高偏置电压和温度降额的成本有效电容器。这些器件在不产生输出负载的情况下可调节至特定的精度。

TLV702-Q1 系列 LDO 线性稳压器采用 SOT 和 WSON 封装。

器件信息(1)

器件型号	封装	封装尺寸（标称值）
TLV702-Q1	小外形尺寸晶体管 (SOT) (5)	2.90mm × 1.60mm
	WSON (6)	1.50mm × 1.50mm

(1) 如需了解所有可用封装，请参阅数据表末尾的封装选项附录。

典型应用

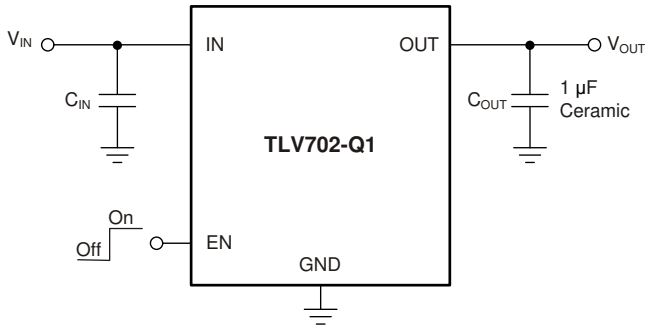

本文档旨在为方便起见，提供有关 TI 产品中文版本的信息，以确认产品的概要。 有关适用的官方英文版本的最新信息，请访问 www.ti.com，其内容始终优先。 TI 不保证翻译的准确性和有效性。 在实际设计之前，请务必参考最新版本的英文版本。

目录

1 特性 ... 1
2 应用 ... 1
3 说明 ... 1
4 修订历史记录 ... 2
5 **Pin Configuration and Functions** ... 3
6 **Specifications** ... 4
6.1 Absolute Maximum Ratings ... 4
6.2 ESD Ratings ... 4
6.3 Recommended Operating Conditions ... 4
6.4 Thermal Information ... 4
6.5 Electrical Characteristics ... 5
6.6 Typical Characteristics ... 6
7 **Detailed Description** ... 10
7.1 Overview ... 10
7.2 Functional Block Diagrams ... 10
7.3 Feature Description ... 10
7.4 Device Functional Modes ... 11
8 **Application and Implementation** ... 12
8.1 Application Information ... 12
8.2 Typical Application ... 12
9 **Power Supply Recommendations** ... 14
9.1 Power Dissipation ... 14
10 **Layout** ... 14
10.1 Layout Guidelines ... 14
10.2 Layout Examples ... 15
11 器件和文档支持 ... 16
11.1 器件支持 ... 16
11.2 文档支持 ... 16
11.3 接收文档更新通知 ... 16
11.4 社区资源 ... 16
11.5 商标 ... 16
11.6 静电放电警告 ... 16
11.7 Glossary ... 16
12 机械、封装和可订购信息 ... 17

4 修订历史记录

注：之前版本的页码可能与当前版本有所不同。

Changes from Revision C (January 2018) to Revision D — **Page**

- Changed OUT pin number from 5 to 3 in DSE column of *Pin Functions* table ... 3
- Added footnote to maximum EN voltage specification ... 4
- Added parameter names to *Recommended Operating Conditions* table ... 4

Changes from Revision B (June 2015) to Revision C — **Page**

- 已添加 向文档添加了 DBV 封装 ... 1
- 已更改 更改了*封装* 特性 项目符号以将 DBV 封装包括在内 ... 1
- Added DBV package to *Pin Configuration and Functions* section ... 3
- Added DBV column to *Thermal Information* table ... 4
- Changed title of *Layout Example for the DDC and DBV Packages* figure to include DBV package ... 15

Changes from Revision A (August 2013) to Revision B — **Page**

- 向数据表添加了 DSE（6 引脚 WSON）封装 ... 1
- 向数据表添加了*器件信息*、*ESD 额定值* 和*建议运行条件* 表，以及*详细 说明*、*应用和实施*、*电源建议*、*布局*、*器件和文档支持*，以及*机械*、*封装和可订购信息* 部分 ... 1
- ... 1
- 在精度为 2% 中添加了“在工作温度范围内”*特性*项目符号中将“可编程”改为“可调节” ... 1
- 在整篇数据表中将 DDC 封装名称从 TSOT23 更改为 SOT ... 1
- 已更改*应用* 要点的措辞 ... 1
- 更改了*说明* 部分的文本 ... 1
- 将*典型应用电路* 上的陶瓷电容单位从 mF 更改成了 µF（拼写错误） ... 1
- Changed "free-air temperature" to "junction temperature" in *Absolute Maximum Ratings* condition statement ... 4
- Added T_J to T_A condition in *Electrical Characteristics* condition statement ... 5
- Changed T_A to T_J for typical values in *Electrcial Characteristics* condition statement ... 5

Copyright © 2013–2019, Texas Instruments Incorporated

5 Pin Configuration and Functions

DDC and DBV Package
5-pin SOT
Top View

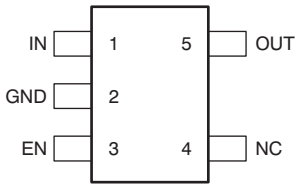

DSE Package
6-Pin WSON
Top View

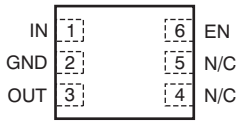

Pin Functions

PIN			I/O	DESCRIPTION
NAME	DDC, DBV (SOT)	DSE (WSON)		
IN	1	1	I	Input pin. A small, 1-µF ceramic capacitor is recommended from this pin to ground to assure stability and good transient performance. See *Input and Output Capacitor Requirements* in the *Application Information* section for more details.
GND	2	2	—	Ground pin
EN	3	6	I	Enable pin. Driving EN over 0.9 V turns on the regulator. Driving EN below 0.4 V puts the regulator into shutdown mode and reduces operating current to 1 µA, nominal.
NC	4	4, 5	—	No connection. Tie this pin to ground to improve thermal dissipation.
OUT	5	3	O	Regulated output voltage pin. A small, 1-µF ceramic capacitor is needed from this pin to ground for stability. See *Input and Output Capacitor Requirements* in the *Application Information* section for more details.

Copyright © 2013–2019, Texas Instruments Incorporated

6 Specifications

6.1 Absolute Maximum Ratings

over operating junction temperature range (unless otherwise noted)[1]

		MIN	MAX	UNIT
Voltage[2]	IN	–0.3	6	V
	EN	–0.3	6[3]	V
	OUT	–0.3	6	V
Current (source)	OUT	Internally limited		A
Output short-circuit duration		Indefinite		
Temperature	Operating virtual junction, T_J	–55	150	°C
	Storage, T_{stg}	–55	150	°C

(1) Stresses beyond those listed under *Absolute Maximum Ratings* may cause permanent damage to the device. These are stress ratings only, which do not imply functional operation of the device at these or any other conditions beyond those indicated under *Recommended Operating Conditions*. Exposure to absolute-maximum-rated conditions for extended periods may affect device reliability.
(2) All voltages are with respect to network ground terminal.
(3) The absolute maximum rating is V_{IN} + 0.3 V or 6.0 V, whichever is smaller.

6.2 ESD Ratings

			VALUE	UNIT
$V_{(ESD)}$	Electrostatic discharge	Human-body model (HBM), per AEC Q100-002[1]	±2000	V
		Charged-device model (CDM), per AEC Q100-011	±750	

(1) AEC Q100-002 indicates that HBM stressing shall be in accordance with the ANSI/ESDA/JEDEC JS-001 specification.

6.3 Recommended Operating Conditions

over operating free-air temperature range (unless otherwise noted)

		MIN	NOM	MAX	UNIT
V_{IN}	Input voltage	2		5.5	V
V_{OUT}	Output voltage	1.2		4.8	V
I_{OUT}	Output current	0		300	mA
T_A	Ambient temperature	–40		125	°C
T_J	Operating virtual junction temperature	–40		125	°C

6.4 Thermal Information

THERMAL METRIC[1]		TLV702-Q1			UNIT
		DDC (SOT)	DBV (SOT)	DSE (WSON)	
		5 PINS	5 PINS	6 PINS	
$R_{\theta JA}$	Junction-to-ambient thermal resistance	262.8	249.2	321.3	°C/W
$R_{\theta JC(top)}$	Junction-to-case (top) thermal resistance	68.2	136.4	207.9	°C/W
$R_{\theta JB}$	Junction-to-board thermal resistance	81.6	85.9	281.5	°C/W
ψ_{JT}	Junction-to-top characterization parameter	1.1	19.5	42.4	°C/W
ψ_{JB}	Junction-to-board characterization parameter	80.9	85.3	284.8	°C/W
$R_{\theta JC(bot)}$	Junction-to-case (bottom) thermal resistance	N/A	N/A	142.3	°C/W

(1) For more information about traditional and new thermal metrics, see the *Semiconductor and IC Package Thermal Metrics* application report.

Copyright © 2013–2019, Texas Instruments Incorporated

6.5 Electrical Characteristics

At V_{IN} = $V_{OUT(nom)}$ + 0.5 V or 2 V (whichever is greater); I_{OUT} = 10 mA, V_{EN} = 0.9 V, C_{OUT} = 1 µF, and T_J, T_A = –40°C to +125°C, unless otherwise noted. Typical values are at T_J = 25°C.

PARAMETER		TEST CONDITIONS	MIN	TYP	MAX	UNIT
	DC output accuracy		–2%	0.5%	2%	
$\Delta V_{O(\Delta VI)}$	Line regulation	$V_{OUT(nom)}$ + 0.5 V ≤ V_{IN} ≤ 5.5 V, I_{OUT} = 10 mA		1	5	mV
$\Delta V_{O(\Delta IO)}$	Load regulation	0 mA ≤ I_{OUT} ≤ 300 mA		1	15	mV
V_{DO}	Dropout voltage (1)	V_{IN} = 0.98 × $V_{OUT(nom)}$, I_{OUT} = 300 mA		260	375	mV
I_{CL}	Output current limit	V_{OUT} = 0.9 × $V_{OUT(nom)}$	320	500	860	mA
I_{GND}	Ground pin current	I_{OUT} = 0 mA		35	55	µA
		I_{OUT} = 300 mA, V_{IN} = V_{OUT} + 0.5 V		370		µA
I_{SHDN}	Ground pin current (shutdown)	V_{EN} ≤ 0.4 V, V_{IN} = 2 V		400		nA
		V_{EN} ≤ 0.4 V, 2 V ≤ V_{IN} ≤ 4.5 V		1	2.5	µA
PSRR	Power-supply rejection ratio	V_{IN} = 2.3 V, V_{OUT} = 1.8 V, I_{OUT} = 10 mA, f = 1 kHz		68		dB
V_n	Output noise voltage	BW = 100 Hz to 100 kHz, V_{IN} = 2.3 V, V_{OUT} = 1.8 V, I_{OUT} = 10 mA		48		μV_{RMS}
t_{STR}	Start-up time (2)	C_{OUT} = 1 µF, I_{OUT} = 300 mA		100		µs
$V_{EN(high)}$	Enable pin high (enabled)		0.9		V_{IN}	V
$V_{EN(low)}$	Enable pin low (disabled)		0		0.4	V
I_{EN}	Enable pin current	V_{IN} = V_{EN} = 5.5 V		0.04		µA
UVLO	Undervoltage lockout	V_{IN} rising		1.9		V
T_{sd}	Thermal shutdown temperature	Shutdown, temperature increasing		165		°C
		Reset, temperature decreasing		145		°C

(1) V_{DO} is measured for devices with $V_{OUT(nom)}$ ≥ 2.35 V.
(2) Start-up time = time from EN assertion to 0.98 × $V_{OUT(nom)}$.

Copyright © 2013–2019, Texas Instruments Incorporated

6.6 Typical Characteristics

Over operating temperature range (T_J = –40°C to +125°C), V_{IN} = $V_{OUT(nom)}$ + 0.5 V or 2 V, whichever is greater; I_{OUT} = 10 mA, V_{EN} = V_{IN}, C_{OUT} = 1 µF, unless otherwise noted. Typical values are at T_J = 25°C.

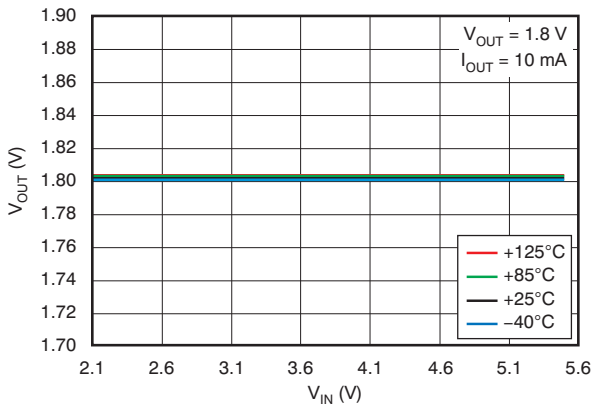

Figure 1. Line Regulation

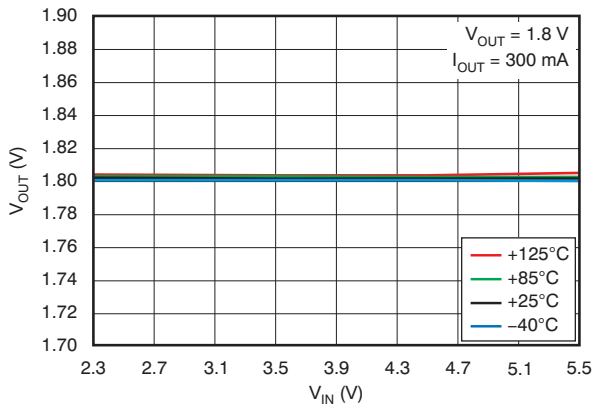

Figure 2. Line Regulation

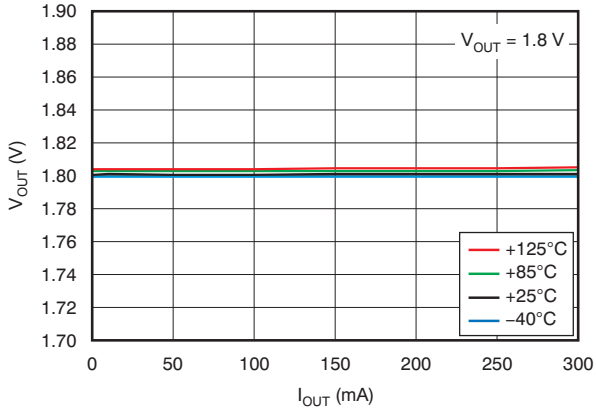

Figure 3. Load Regulation

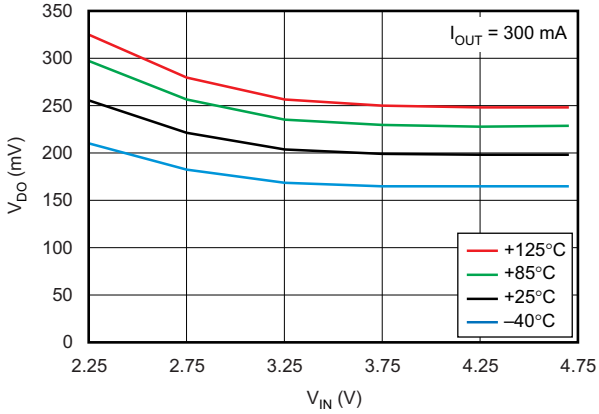

Figure 4. Dropout Voltage vs Input Voltage

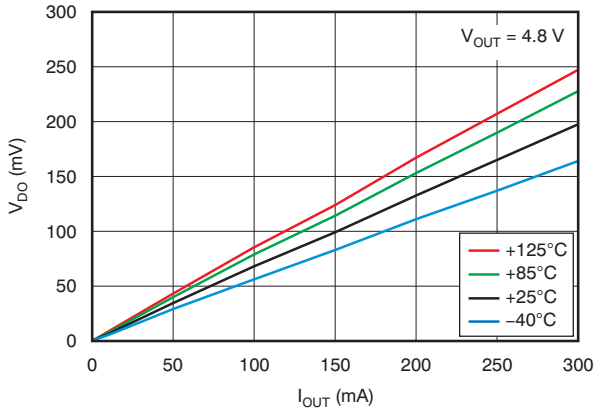

Figure 5. Dropout Voltage vs Output Current

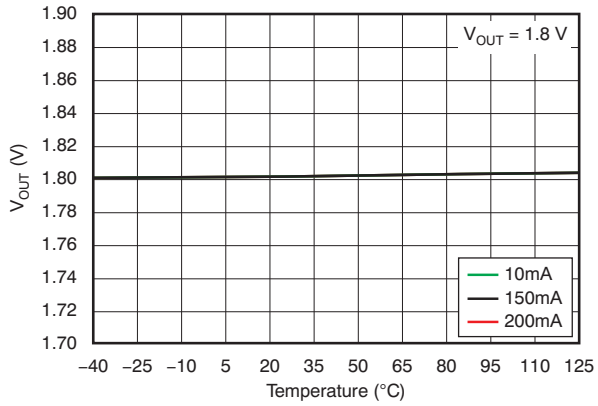

Figure 6. Output Voltage vs Temperature

Copyright © 2013–2019, Texas Instruments Incorporated

Typical Characteristics (continued)

Over operating temperature range (T_J = –40°C to +125°C), V_{IN} = $V_{OUT(nom)}$ + 0.5 V or 2 V, whichever is greater; I_{OUT} = 10 mA, V_{EN} = V_{IN}, C_{OUT} = 1 µF, unless otherwise noted. Typical values are at T_J = 25°C.

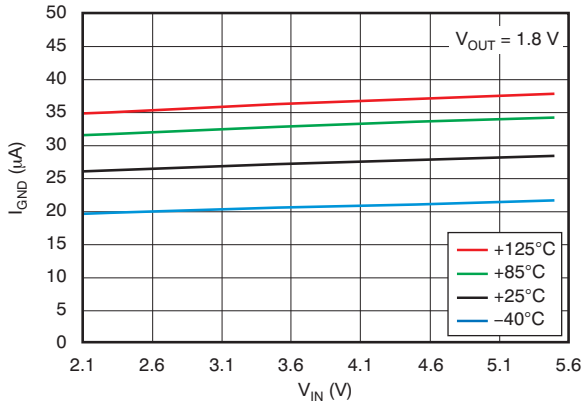

Figure 7. Ground Pin Current vs Input Voltage

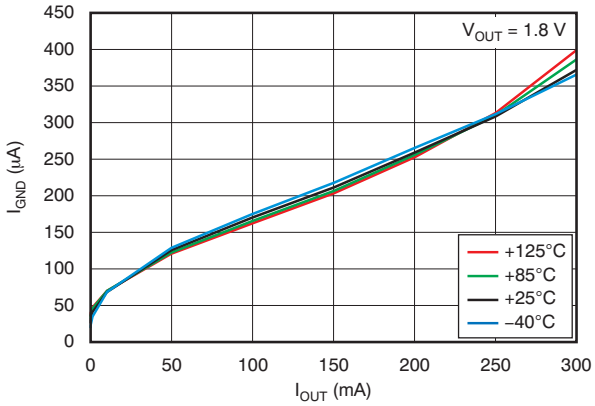

Figure 8. Ground Pin Current vs Load

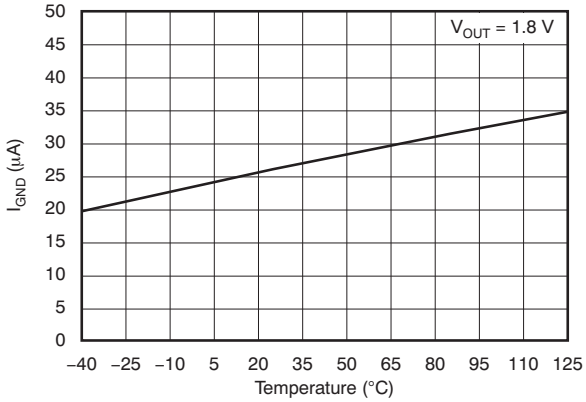

Figure 9. Ground Pin Current vs Temperature

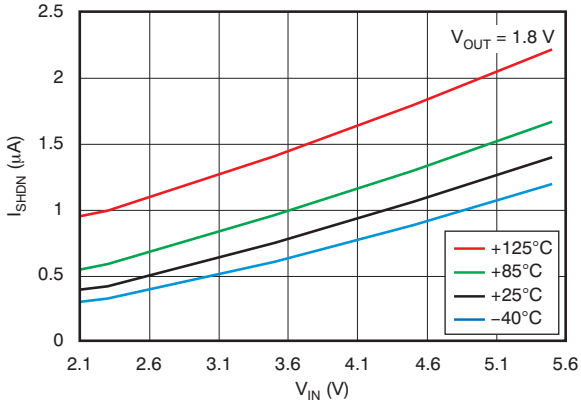

Figure 10. Shutdown Current vs Input Voltage

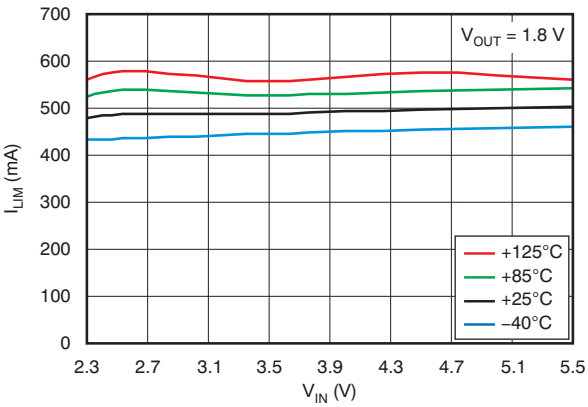

Figure 11. Current Limit vs Input Voltage

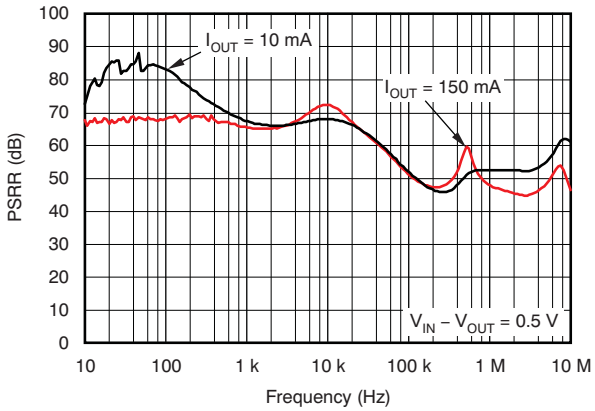

Figure 12. Power-Supply Ripple Rejection vs Frequency

Typical Characteristics (continued)

Over operating temperature range (T_J = –40°C to +125°C), V_{IN} = $V_{OUT(nom)}$ + 0.5 V or 2 V, whichever is greater; I_{OUT} = 10 mA, V_{EN} = V_{IN}, C_{OUT} = 1 µF, unless otherwise noted. Typical values are at T_J = 25°C.

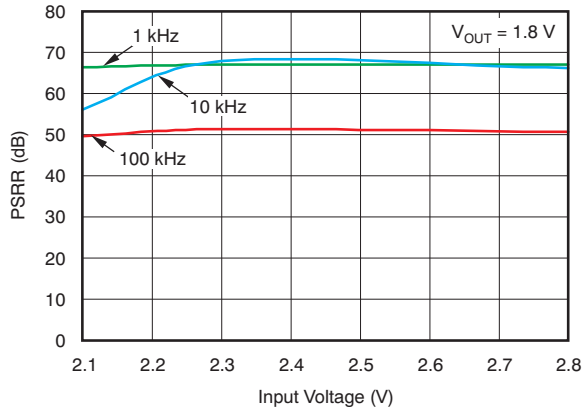

Figure 13. Power-Supply Ripple Rejection vs Input Voltage

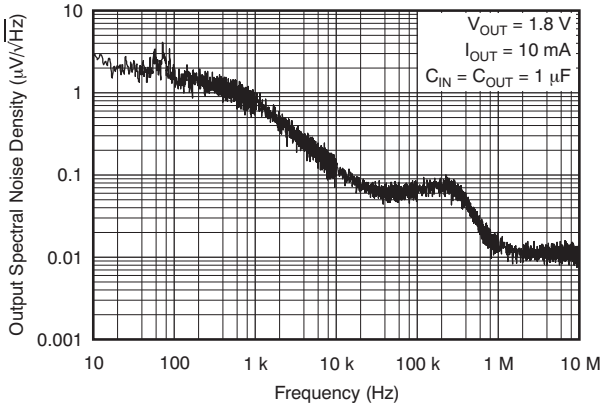

Figure 14. Output Spectral Noise Density vs Frequency

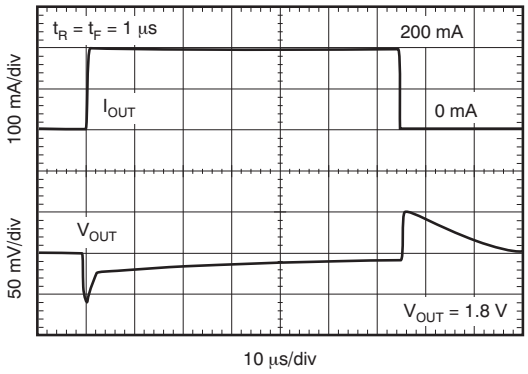

Figure 15. Load Transient Response

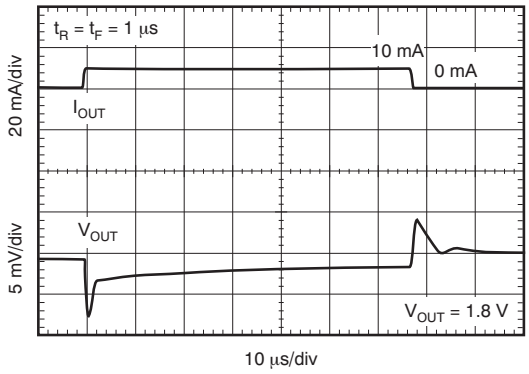

Figure 16. Load Transient Response

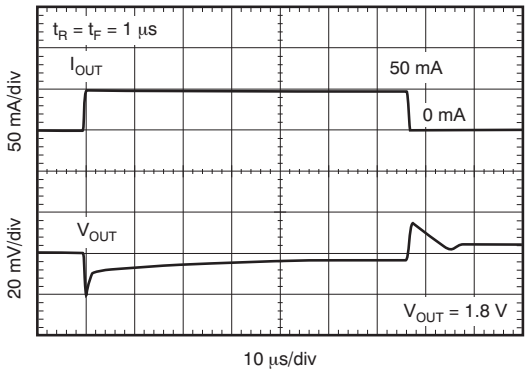

Figure 17. Load Transient Response

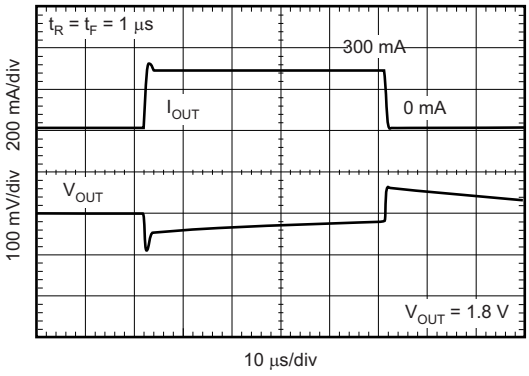

Figure 18. Load Transient Response

Copyright © 2013–2019, Texas Instruments Incorporated

Typical Characteristics (continued)

Over operating temperature range (T_J = –40°C to +125°C), V_{IN} = $V_{OUT(nom)}$ + 0.5 V or 2 V, whichever is greater; I_{OUT} = 10 mA, V_{EN} = V_{IN}, C_{OUT} = 1 µF, unless otherwise noted. Typical values are at T_J = 25°C.

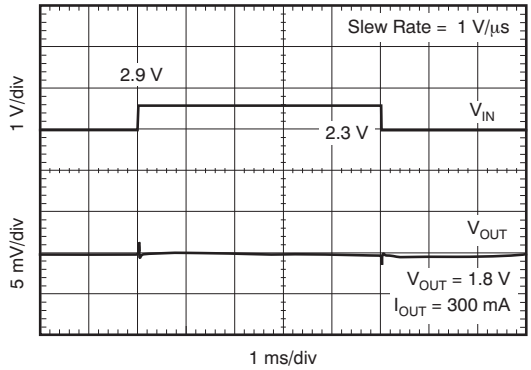

Figure 19. Line Transient Response

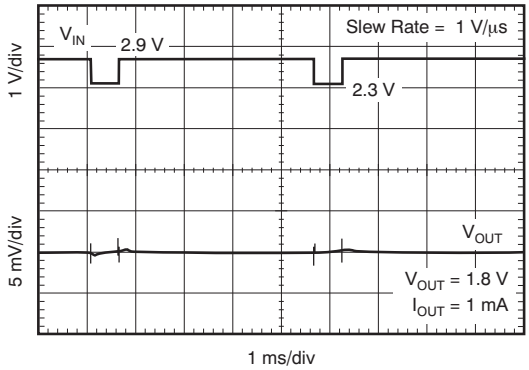

Figure 20. Line Transient Response

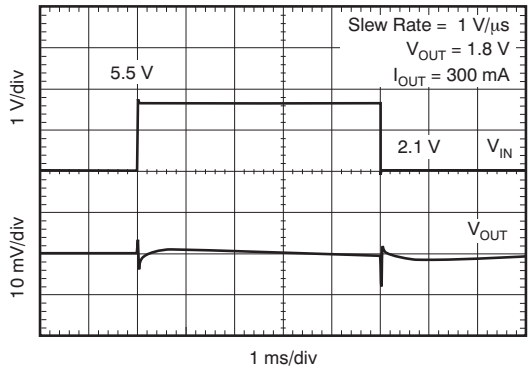

Figure 21. Line Transient Response

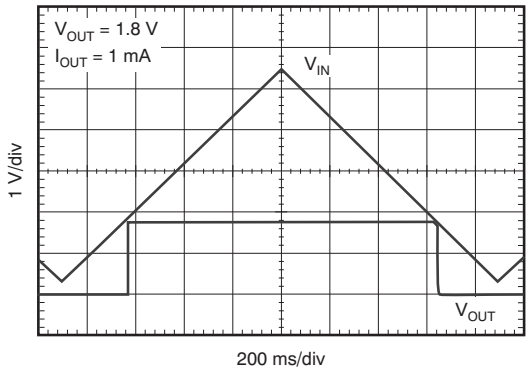

Figure 22. V_{IN} Ramp Up, Ramp Down Response

7 Detailed Description

7.1 Overview

The TLV702-Q1 series of low-dropout (LDO) linear regulators are low quiescent current devices with excellent line and load transient performance. These LDOs are designed for power-sensitive applications. A precision bandgap and error amplifier provides overall 2% accuracy. Low output noise, very high power-supply rejection ratio (PSRR), and low dropout voltage make this series of devices ideal for most battery-operated handheld equipment. All device versions have integrated thermal shutdown, current limit, and undervoltage lockout (UVLO) protections.

7.2 Functional Block Diagrams

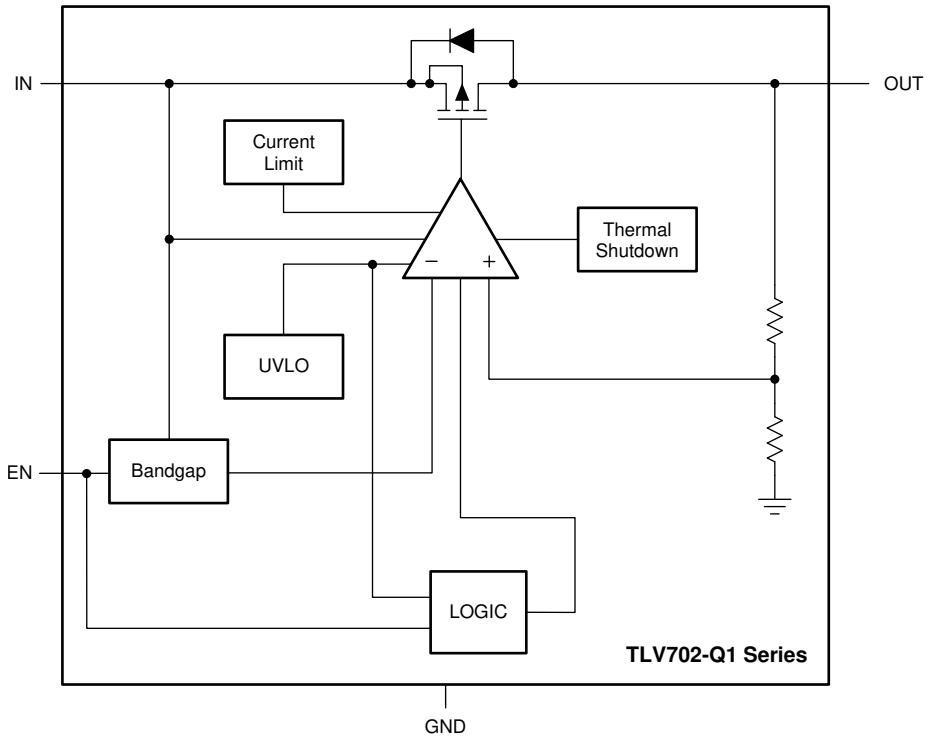

Figure 23. TLV702-Q1 Block Diagram

7.3 Feature Description

7.3.1 Internal Current Limit

The TLV702-Q1 internal current limit protection helps to protect the regulator during fault conditions. During current limit operation, the output sources a fixed amount of current that is largely independent of the output voltage. In such a case, the output voltage is not regulated, and is $V_{OUT} = I_{CL} \times R_{LOAD}$. The PMOS pass transistor dissipates $(V_{IN} – V_{OUT}) \times I_{CL}$ until thermal shutdown is triggered and the device turns off. As the device cools, the device is turned on by the internal thermal shutdown circuit. If the fault condition continues, the device cycles between current limit operation and thermal shutdown. See *Thermal Consideration* for more details.

The PMOS pass element in the TLV702-Q1 has a built-in body diode that conducts current when the voltage at the OUT pin exceeds the voltage at IN. This current is not limited; if extended reverse-voltage operation is anticipated, externally limit the output current to 5% of the rated I_{OUT} specification.

Copyright © 2013–2019, Texas Instruments Incorporated

Feature Description (continued)

7.3.2 Shutdown

The enable pin (EN) is active high. The device is enabled when voltage at EN pin exceeds 0.9 V. The device is turned off when the EN pin is held at less than 0.4 V. When shutdown capability is not required, connect the EN pin to the IN pin.

7.3.3 Dropout Voltage

The TLV702-Q1 uses a PMOS pass transistor to achieve low dropout. When (V_{IN} – V_{OUT}) is less than the dropout voltage (V_{DO}), the PMOS pass device is in the linear (triode) region of operation. The input-to-output resistance is equal to the drain-source on-state resistance ($R_{DS(on)}$) of the PMOS pass element. V_{DO} scales approximately with output current because the PMOS device behaves as a resistor in dropout.

As with any linear regulator, PSRR and transient response are degraded as (V_{IN} – V_{OUT}) approaches dropout. This effect is shown in Figure 13.

7.3.4 Undervoltage Lockout

The TLV702-Q1 uses a UVLO circuit to keep the output shut off until internal circuitry is operating properly.

7.4 Device Functional Modes

7.4.1 Normal Operation

The device regulates to the nominal output voltage under the following conditions:

- The input voltage is greater than the nominal output voltage added to the dropout voltage.
- The output current is less than the current limit.
- The input voltage is greater than the UVLO voltage.

7.4.2 Dropout Operation

If the input voltage is less than the nominal output voltage plus the specified dropout voltage, but all other conditions are met for normal operation, the device operates in dropout mode. In this condition, the output voltage is the same as the input voltage minus the dropout voltage. The transient performance of the device is significantly degraded because the pass device is in a triode state and no longer regulates the output voltage of the LDO. Line or load transients in dropout may result in large output voltage deviations.

Table 1 lists the conditions that lead to the different modes of operation.

Table 1. Device Functional Mode Comparison

OPERATING MODE	PARAMETER	
	V_{IN}	I_{OUT}
Normal mode	$V_{IN} > V_{OUT(nom)} + V_{DO}$	$I_{OUT} < I_{CL}$
Dropout mode	$V_{IN} < V_{OUT(nom)} + V_{DO}$	$I_{OUT} < I_{CL}$
Current limit	V_{IN} > UVLO	$I_{OUT} > I_{CL}$

Copyright © 2013–2019, Texas Instruments Incorporated

8 Application and Implementation

NOTE

Information in the following applications sections is not part of the TI component specification, and TI does not warrant its accuracy or completeness. TI's customers are responsible for determining suitability of components for their purposes. Customers should validate and test their design implementation to confirm system functionality.

8.1 Application Information

The TLV702-Q1 belongs to a new family of next-generation value LDO regulators. These devices consume low quiescent current and deliver excellent line and load transient performance. These characteristics, combined with low noise and very good PSRR with little (V_{IN} – V_{OUT}) headroom, make this family of devices ideal for portable RF applications. This family of regulators offers current limit and thermal protection, and is specified from –40°C to +125°C.

8.2 Typical Application

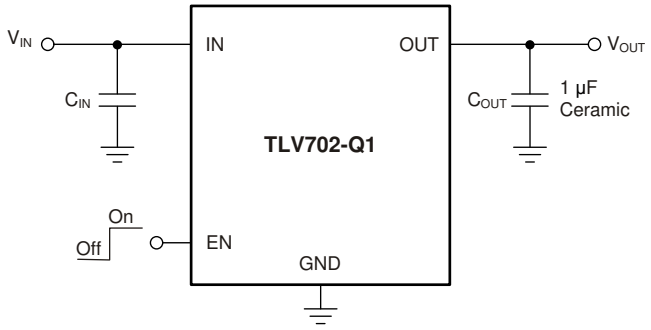

Figure 24. Typical Application Circuit

8.2.1 Design Requirements

Table 2 lists the design parameters.

Table 2. Design Parameters

PARAMETER	DESIGN REQUIREMENT
Input voltage	2.5 V to 3.3 V
Output voltage	1.8 V
Output current	100 mA

Copyright © 2013–2019, Texas Instruments Incorporated

8.2.2 Detailed Design Procedure

8.2.2.1 Input and Output Capacitor Requirements

1-μF X5R- and X7R-type ceramic capacitors are recommended because these capacitors have minimal variation in value and equivalent series resistance (ESR) over temperature.

However, the TLV702-Q1 is designed to be stable with an *effective capacitance* of 0.1 μF or larger at the output. Thus, the device is stable with capacitors of other dielectric types as well, as long as the effective capacitance under operating bias voltage and temperature is greater than 0.1 μF. This effective capacitance refers to the capacitance that the LDO sees under operating bias voltage and temperature conditions; that is, the capacitance after taking both bias voltage and temperature derating into consideration. In addition to allowing the use of lower-cost dielectrics, this capability of being stable with 0.1-μF effective capacitance also enables the use of smaller footprint capacitors that have higher derating in size- and space-constrained applications.

Using a 0.1-μF rated capacitor at the output of the LDO does not ensure stability because the effective capacitance under the specified operating conditions must not be less than 0.1 μF. Maximum ESR should be less than 200 mΩ.

Although an input capacitor is not required for stability, it is good analog design practice to connect a 0.1-μF to 1-μF, low ESR capacitor across the IN pin and GND pin of the regulator. This capacitor counteracts reactive input sources and improves transient response, noise rejection, and ripple rejection. A higher-value capacitor may be necessary if large, fast rise-time load transients are anticipated, or if the device is not located close to the power source. If source impedance is more than 2 Ω, a 0.1-μF input capacitor may be necessary for stability.

8.2.2.2 Transient Response

As with any regulator, increasing the size of the output capacitor reduces overshoot and undershoot magnitude, but increases the duration of the transient response.

8.2.3 Application Curves

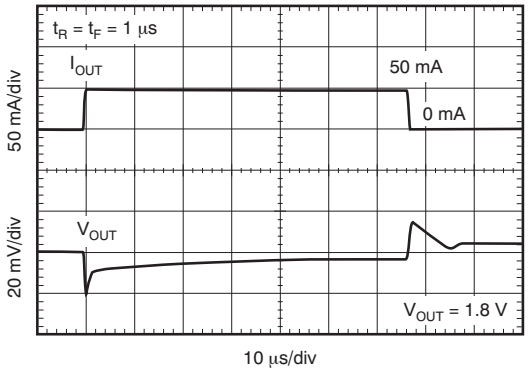

Figure 25. Load Transient Response

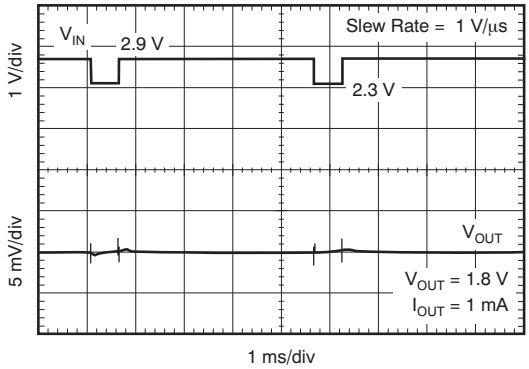

Figure 26. Line Transient Response

9 Power Supply Recommendations

Connect a low output impedance power supply directly to the IN pin of the TLV702-Q1. Inductive impedances between the input supply and the IN pin can create significant voltage excursions at the IN pin during start-up or load transient events.

9.1 Power Dissipation

The ability to remove heat from the die is different for each package type, presenting different considerations in the printed-circuit-board (PCB) layout. The PCB area around the device that is free of other components moves the heat from the device to the ambient air.

Refer to *Thermal Information* for thermal performance on the TLV702-Q1 evaluation module (EVM). The EVM is a two-layer board with two ounces of copper per side.

Power dissipation depends on input voltage and load conditions. Power dissipation (P_D) is equal to the product of the output current and the voltage drop across the output pass element, as shown in Equation 1.

$$P_D = (V_{IN} - V_{OUT}) \times I_{OUT} \tag{1}$$

10 Layout

10.1 Layout Guidelines

Place the input and output capacitors as close to the device pins as possible. To improve ac performance such as PSRR, output noise, and transient response, design the board with separate ground planes for V_{IN} and V_{OUT}, with the ground plane connected only at the GND pin of the device. In addition, connect the ground connection for the output capacitor directly to the GND pin of the device. High-ESR capacitors may degrade PSRR performance.

10.1.1 Thermal Consideration

Thermal protection disables the output when the junction temperature rises to approximately 165°C, allowing the device to cool. When the junction temperature cools to approximately 145°C, the output circuitry is again enabled. Depending on power dissipation, thermal resistance, and ambient temperature, the thermal protection circuit may cycle on and off. This cycling limits the dissipation of the regulator, protecting it from damage as a result of overheating.

Any tendency to activate the thermal protection circuit indicates excessive power dissipation or an inadequate heatsink. For reliable operation, limit junction temperature to 125°C maximum.

To estimate the margin of safety in a complete design (including heatsink), increase the ambient temperature until the thermal protection is triggered; use worst-case loads and signal conditions.

The internal protection circuitry of the TLV702-Q1 is designed to protect against overload conditions but is not intended to replace proper heatsinking. Continuously running the TLV702-Q1 into thermal shutdown degrades device reliability.

Copyright © 2013–2019, Texas Instruments Incorporated

Layout Guidelines (continued)

10.1.2 Package Mounting

Solder pad footprint recommendations for the TLV702-Q1 are available from the TI website at www.ti.com. The recommended layout examples for the DDC and DSE packages are shown in Figure 27 and Figure 28, respectively.

10.2 Layout Examples

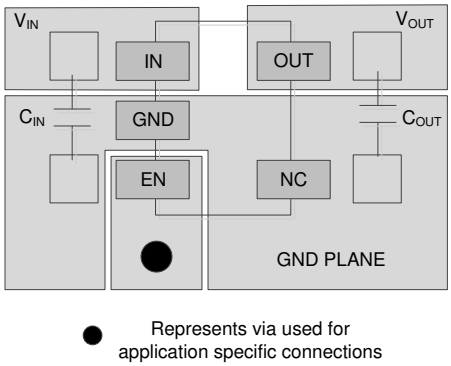

Figure 27. Layout Example for the DDC and DBV Packages

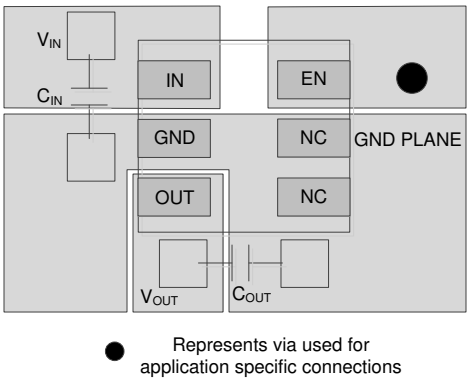

Figure 28. Layout Example for the DSE Package

11 器件和文档支持

11.1 器件支持

11.1.1 开发支持

11.1.1.1 Spice 模型

分析模拟电路和系统的性能时，使用 SPICE 模型对电路性能进行计算机仿真非常有用。您可以从产品文件夹中的*工具和软件* 下获取 TLV702 的 SPICE 模型。

11.1.2 器件命名规则

表 **3.** 订购信息 (1)

产品	V_{OUT} (2)
TLV702**xx** ***yyyz***	**XX** 为标称输出电压（例如 28 = 2.8V）。 **YYY** 为封装符号。 **Z** 为卷带数量（R = 3000，T = 250）。

(1) 要获得最新的封装和订货信息，请参阅本文档末尾的封装选项附录，或者访问器件产品文件夹，此文件夹位于www.ti.com.cn内。
(2) 可提供 1.2V 至 4.8V 范围内的输出电压（以 50mV 为单位增加）。更多详细信息及可用性，请联系制造商。

11.2 文档支持

11.2.1 相关文档

请参阅如下相关文档：

德州仪器 (TI)，*《使用 TLV700xxEVM-503》* 用户指南

11.3 接收文档更新通知

要接收文档更新通知，请导航至 TI.com.cn 上的器件产品文件夹。单击右上角的*通知我* 进行注册，即可每周接收产品信息更改摘要。有关更改的详细信息，请查看任何已修订文档中包含的修订历史记录。

11.4 社区资源

The following links connect to TI community resources. Linked contents are provided "AS IS" by the respective contributors. They do not constitute TI specifications and do not necessarily reflect TI's views; see TI's Terms of Use.

TI E2E™ Online Community ***TI's Engineer-to-Engineer (E2E) Community.*** Created to foster collaboration among engineers. At e2e.ti.com, you can ask questions, share knowledge, explore ideas and help solve problems with fellow engineers.

Design Support ***TI's Design Support*** Quickly find helpful E2E forums along with design support tools and contact information for technical support.

11.5 商标

E2E is a trademark of Texas Instruments.
All other trademarks are the property of their respective owners.

11.6 静电放电警告

ESD 可能会损坏该集成电路。德州仪器 (TI) 建议通过适当的预防措施处理所有集成电路。如果不遵守正确的处理措施和安装程序，可能会损坏集成电路。

ESD 的损坏小至导致微小的性能降级，大至整个器件故障。 精密的集成电路可能更容易受到损坏，这是因为非常细微的参数更改都可能会导致器件与其发布的规格不相符。

11.7 Glossary

SLYZ022 — *TI Glossary*.

This glossary lists and explains terms, acronyms, and definitions.

版权 © 2013–2019, Texas Instruments Incorporated

12 机械、封装和可订购信息

以下页面包含机械、封装和可订购信息。这些信息是指定器件的最新可用数据。数据如有变更，恕不另行通知，且不会对此文档进行修订。如需获取此数据表的浏览器版本，请查阅左侧的导航栏。

PACKAGING INFORMATION

Orderable Device	Status (1)	Package Type	Package Drawing	Pins	Package Qty	Eco Plan (2)	Lead finish/ Ball material (6)	MSL Peak Temp (3)	Op Temp (°C)	Device Marking (4/5)	Samples
TLV702125QDBVRQ1	ACTIVE	SOT-23	DBV	5	3000	RoHS & Green	NIPDAUAG	Level-1-260C-UNLIM	-40 to 125	1M57	Samples
TLV70212QDBVRQ1	ACTIVE	SOT-23	DBV	5	3000	RoHS & Green	NIPDAUAG	Level-1-260C-UNLIM	-40 to 125	1B5H	Samples
TLV70212QDSERQ1	ACTIVE	WSON	DSE	6	3000	RoHS & Green	NIPDAUAG	Level-1-260C-UNLIM	-40 to 125	H9	Samples
TLV70213QDSERQ1	ACTIVE	WSON	DSE	6	3000	RoHS & Green	NIPDAUAG	Level-1-260C-UNLIM	-40 to 125	H8	Samples
TLV70215QDBVRQ1	ACTIVE	SOT-23	DBV	5	3000	RoHS & Green	NIPDAUAG	Level-1-260C-UNLIM	-40 to 125	1B6H	Samples
TLV70215QDSERQ1	ACTIVE	WSON	DSE	6	3000	RoHS & Green	NIPDAUAG	Level-1-260C-UNLIM	-40 to 125	HB	Samples
TLV70218QDBVRQ1	ACTIVE	SOT-23	DBV	5	3000	RoHS & Green	NIPDAUAG	Level-1-260C-UNLIM	-40 to 125	1B7H	Samples
TLV70218QDSERQ1	ACTIVE	WSON	DSE	6	3000	RoHS & Green	NIPDAUAG	Level-1-260C-UNLIM	-40 to 125	HC	Samples
TLV70225QDSERQ1	ACTIVE	WSON	DSE	6	3000	RoHS & Green	NIPDAU	Level-1-260C-UNLIM	-40 to 125	G7	Samples
TLV70227QDBVRQ1	ACTIVE	SOT-23	DBV	5	3000	RoHS & Green	NIPDAUAG	Level-1-260C-UNLIM	-40 to 125	1B8H	Samples
TLV70227QDSERQ1	ACTIVE	WSON	DSE	6	3000	RoHS & Green	NIPDAUAG	Level-1-260C-UNLIM	-40 to 125	H7	Samples
TLV70228QDBVRQ1	ACTIVE	SOT-23	DBV	5	3000	RoHS & Green	NIPDAUAG	Level-1-260C-UNLIM	-40 to 125	1B9H	Samples
TLV70228QDDCRQ1	ACTIVE	SOT-23-THIN	DDC	5	3000	RoHS & Green	NIPDAU	Level-2-260C-1 YEAR	-40 to 125	SJV	Samples
TLV70228QDSERQ1	ACTIVE	WSON	DSE	6	3000	RoHS & Green	NIPDAU	Level-1-260C-UNLIM	-40 to 125	HD	Samples
TLV70229QDBVRQ1	ACTIVE	SOT-23	DBV	5	3000	RoHS & Green	NIPDAUAG	Level-1-260C-UNLIM	-40 to 125	1BAH	Samples
TLV70229QDSERQ1	ACTIVE	WSON	DSE	6	3000	RoHS & Green	NIPDAUAG	Level-1-260C-UNLIM	-40 to 125	H1	Samples
TLV70230QDBVRQ1	ACTIVE	SOT-23	DBV	5	3000	RoHS & Green	NIPDAUAG	Level-1-260C-UNLIM	-40 to 125	1MQ7	Samples
TLV70230QDSERQ1	ACTIVE	WSON	DSE	6	3000	RoHS & Green	NIPDAUAG	Level-1-260C-UNLIM	-40 to 125	HE	Samples
TLV70231QDSERQ1	ACTIVE	WSON	DSE	6	3000	RoHS & Green	NIPDAUAG	Level-1-260C-UNLIM	-40 to 125	HF	Samples
TLV70232QDSERQ1	ACTIVE	WSON	DSE	6	3000	RoHS & Green	NIPDAUAG	Level-1-260C-UNLIM	-40 to 125	HG	Samples

Orderable Device	Status (1)	Package Type	Package Drawing	Pins	Package Qty	Eco Plan (2)	Lead finish/ Ball material (6)	MSL Peak Temp (3)	Op Temp (°C)	Device Marking (4/5)	Samples
TLV70233QDBVRQ1	ACTIVE	SOT-23	DBV	5	3000	RoHS & Green	NIPDAUAG	Level-1-260C-UNLIM	-40 to 125	1BBH	Samples
TLV70233QDSERQ1	ACTIVE	WSON	DSE	6	3000	RoHS & Green	NIPDAUAG	Level-1-260C-UNLIM	-40 to 125	H2	Samples
TLV70236QDSERQ1	ACTIVE	WSON	DSE	6	3000	RoHS & Green	NIPDAUAG	Level-1-260C-UNLIM	-40 to 125	H3	Samples
TLV70245QDSERQ1	ACTIVE	WSON	DSE	6	3000	RoHS & Green	NIPDAUAG	Level-1-260C-UNLIM	-40 to 125	HH	Samples

(1) The marketing status values are defined as follows:
ACTIVE: Product device recommended for new designs.
LIFEBUY: TI has announced that the device will be discontinued, and a lifetime-buy period is in effect.
NRND: Not recommended for new designs. Device is in production to support existing customers, but TI does not recommend using this part in a new design.
PREVIEW: Device has been announced but is not in production. Samples may or may not be available.
OBSOLETE: TI has discontinued the production of the device.

(2) **RoHS:** TI defines "RoHS" to mean semiconductor products that are compliant with the current EU RoHS requirements for all 10 RoHS substances, including the requirement that RoHS substance do not exceed 0.1% by weight in homogeneous materials. Where designed to be soldered at high temperatures, "RoHS" products are suitable for use in specified lead-free processes. TI may reference these types of products as "Pb-Free".
RoHS Exempt: TI defines "RoHS Exempt" to mean products that contain lead but are compliant with EU RoHS pursuant to a specific EU RoHS exemption.
Green: TI defines "Green" to mean the content of Chlorine (Cl) and Bromine (Br) based flame retardants meet JS709B low halogen requirements of <=1000ppm threshold. Antimony trioxide based flame retardants must also meet the <=1000ppm threshold requirement.

(3) MSL, Peak Temp. - The Moisture Sensitivity Level rating according to the JEDEC industry standard classifications, and peak solder temperature.

(4) There may be additional marking, which relates to the logo, the lot trace code information, or the environmental category on the device.

(5) Multiple Device Markings will be inside parentheses. Only one Device Marking contained in parentheses and separated by a "~" will appear on a device. If a line is indented then it is a continuation of the previous line and the two combined represent the entire Device Marking for that device.

(6) Lead finish/Ball material - Orderable Devices may have multiple material finish options. Finish options are separated by a vertical ruled line. Lead finish/Ball material values may wrap to two lines if the finish value exceeds the maximum column width.

Important Information and Disclaimer: The information provided on this page represents TI's knowledge and belief as of the date that it is provided. TI bases its knowledge and belief on information provided by third parties, and makes no representation or warranty as to the accuracy of such information. Efforts are underway to better integrate information from third parties. TI has taken and continues to take reasonable steps to provide representative and accurate information but may not have conducted destructive testing or chemical analysis on incoming materials and chemicals. TI and TI suppliers consider certain information to be proprietary, and thus CAS numbers and other limited information may not be available for release.

In no event shall TI's liability arising out of such information exceed the total purchase price of the TI part(s) at issue in this document sold by TI to Customer on an annual basis.

TAPE AND REEL INFORMATION

REEL DIMENSIONS

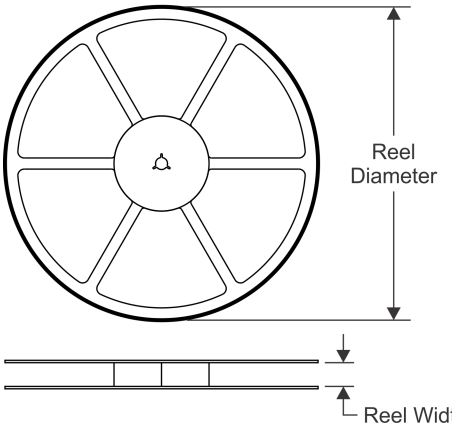

TAPE DIMENSIONS

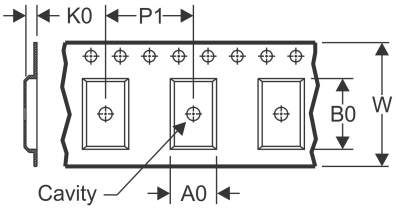

A0	Dimension designed to accommodate the component width
B0	Dimension designed to accommodate the component length
K0	Dimension designed to accommodate the component thickness
W	Overall width of the carrier tape
P1	Pitch between successive cavity centers

QUADRANT ASSIGNMENTS FOR PIN 1 ORIENTATION IN TAPE

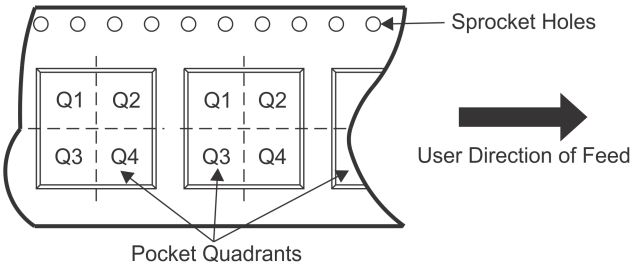

*All dimensions are nominal

Device	Package Type	Package Drawing	Pins	SPQ	Reel Diameter (mm)	Reel Width W1 (mm)	A0 (mm)	B0 (mm)	K0 (mm)	P1 (mm)	W (mm)	Pin1 Quadrant
TLV702125QDBVRQ1	SOT-23	DBV	5	3000	180.0	8.4	3.23	3.17	1.37	4.0	8.0	Q3
TLV70212QDBVRQ1	SOT-23	DBV	5	3000	180.0	8.4	3.23	3.17	1.37	4.0	8.0	Q3
TLV70212QDSERQ1	WSON	DSE	6	3000	179.0	8.4	1.8	1.8	1.0	4.0	8.0	Q2
TLV70213QDSERQ1	WSON	DSE	6	3000	179.0	8.4	1.8	1.8	1.0	4.0	8.0	Q2
TLV70215QDBVRQ1	SOT-23	DBV	5	3000	180.0	8.4	3.23	3.17	1.37	4.0	8.0	Q3
TLV70215QDSERQ1	WSON	DSE	6	3000	179.0	8.4	1.8	1.8	1.0	4.0	8.0	Q2
TLV70218QDBVRQ1	SOT-23	DBV	5	3000	180.0	8.4	3.23	3.17	1.37	4.0	8.0	Q3
TLV70218QDSERQ1	WSON	DSE	6	3000	179.0	8.4	1.8	1.8	1.0	4.0	8.0	Q2
TLV70225QDSERQ1	WSON	DSE	6	3000	179.0	8.4	1.8	1.8	1.0	4.0	8.0	Q2
TLV70227QDBVRQ1	SOT-23	DBV	5	3000	180.0	8.4	3.23	3.17	1.37	4.0	8.0	Q3
TLV70227QDSERQ1	WSON	DSE	6	3000	179.0	8.4	1.8	1.8	1.0	4.0	8.0	Q2
TLV70228QDBVRQ1	SOT-23	DBV	5	3000	180.0	8.4	3.23	3.17	1.37	4.0	8.0	Q3
TLV70228QDDCRQ1	SOT-23-THIN	DDC	5	3000	179.0	8.4	3.2	3.2	1.4	4.0	8.0	Q3
TLV70228QDSERQ1	WSON	DSE	6	3000	179.0	8.4	1.8	1.8	1.0	4.0	8.0	Q2
TLV70229QDBVRQ1	SOT-23	DBV	5	3000	180.0	8.4	3.23	3.17	1.37	4.0	8.0	Q3
TLV70229QDSERQ1	WSON	DSE	6	3000	179.0	8.4	1.8	1.8	1.0	4.0	8.0	Q2
TLV70230QDBVRQ1	SOT-23	DBV	5	3000	180.0	8.4	3.23	3.17	1.37	4.0	8.0	Q3

Device	Package Type	Package Drawing	Pins	SPQ	Reel Diameter (mm)	Reel Width W1 (mm)	A0 (mm)	B0 (mm)	K0 (mm)	P1 (mm)	W (mm)	Pin1 Quadrant
TLV70230QDSERQ1	WSON	DSE	6	3000	179.0	8.4	1.8	1.8	1.0	4.0	8.0	Q2
TLV70231QDSERQ1	WSON	DSE	6	3000	179.0	8.4	1.8	1.8	1.0	4.0	8.0	Q2
TLV70232QDSERQ1	WSON	DSE	6	3000	179.0	8.4	1.8	1.8	1.0	4.0	8.0	Q2
TLV70233QDBVRQ1	SOT-23	DBV	5	3000	180.0	8.4	3.23	3.17	1.37	4.0	8.0	Q3
TLV70233QDSERQ1	WSON	DSE	6	3000	179.0	8.4	1.8	1.8	1.0	4.0	8.0	Q2
TLV70236QDSERQ1	WSON	DSE	6	3000	179.0	8.4	1.8	1.8	1.0	4.0	8.0	Q2
TLV70245QDSERQ1	WSON	DSE	6	3000	179.0	8.4	1.8	1.8	1.0	4.0	8.0	Q2

TAPE AND REEL BOX DIMENSIONS

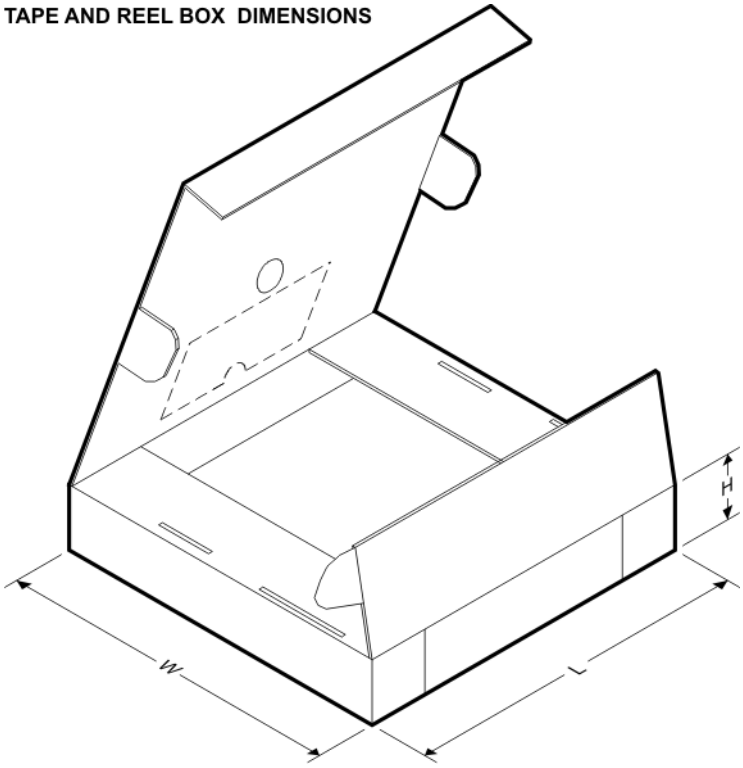

*All dimensions are nominal

Device	Package Type	Package Drawing	Pins	SPQ	Length (mm)	Width (mm)	Height (mm)
TLV702125QDBVRQ1	SOT-23	DBV	5	3000	183.0	183.0	20.0
TLV70212QDBVRQ1	SOT-23	DBV	5	3000	183.0	183.0	20.0
TLV70212QDSERQ1	WSON	DSE	6	3000	200.0	183.0	25.0
TLV70213QDSERQ1	WSON	DSE	6	3000	200.0	183.0	25.0
TLV70215QDBVRQ1	SOT-23	DBV	5	3000	183.0	183.0	20.0
TLV70215QDSERQ1	WSON	DSE	6	3000	200.0	183.0	25.0
TLV70218QDBVRQ1	SOT-23	DBV	5	3000	183.0	183.0	20.0
TLV70218QDSERQ1	WSON	DSE	6	3000	200.0	183.0	25.0
TLV70225QDSERQ1	WSON	DSE	6	3000	200.0	183.0	25.0
TLV70227QDBVRQ1	SOT-23	DBV	5	3000	183.0	183.0	20.0

Device	Package Type	Package Drawing	Pins	SPQ	Length (mm)	Width (mm)	Height (mm)
TLV70227QDSERQ1	WSON	DSE	6	3000	200.0	183.0	25.0
TLV70228QDBVRQ1	SOT-23	DBV	5	3000	183.0	183.0	20.0
TLV70228QDDCRQ1	SOT-23-THIN	DDC	5	3000	213.0	191.0	35.0
TLV70228QDSERQ1	WSON	DSE	6	3000	200.0	183.0	25.0
TLV70229QDBVRQ1	SOT-23	DBV	5	3000	183.0	183.0	20.0
TLV70229QDSERQ1	WSON	DSE	6	3000	200.0	183.0	25.0
TLV70230QDBVRQ1	SOT-23	DBV	5	3000	183.0	183.0	20.0
TLV70230QDSERQ1	WSON	DSE	6	3000	200.0	183.0	25.0
TLV70231QDSERQ1	WSON	DSE	6	3000	200.0	183.0	25.0
TLV70232QDSERQ1	WSON	DSE	6	3000	200.0	183.0	25.0
TLV70233QDBVRQ1	SOT-23	DBV	5	3000	183.0	183.0	20.0
TLV70233QDSERQ1	WSON	DSE	6	3000	200.0	183.0	25.0
TLV70236QDSERQ1	WSON	DSE	6	3000	200.0	183.0	25.0
TLV70245QDSERQ1	WSON	DSE	6	3000	200.0	183.0	25.0

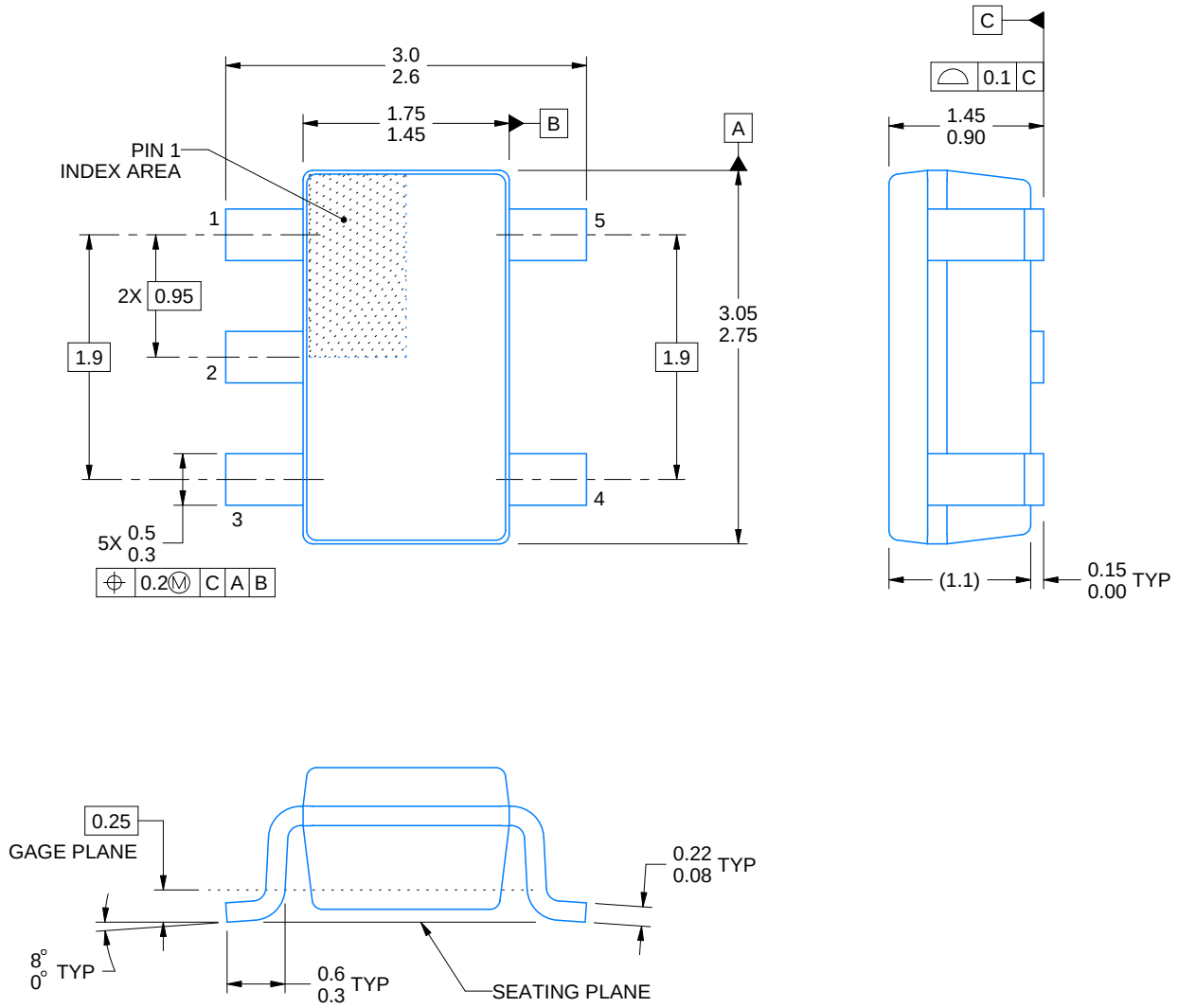

4214839/F 06/2021

NOTES:

1. All linear dimensions are in millimeters. Any dimensions in parenthesis are for reference only. Dimensioning and tolerancing per ASME Y14.5M.
2. This drawing is subject to change without notice.
3. Refernce JEDEC MO-178.
4. Body dimensions do not include mold flash, protrusions, or gate burrs. Mold flash, protrusions, or gate burrs shall not exceed 0.25 mm per side.

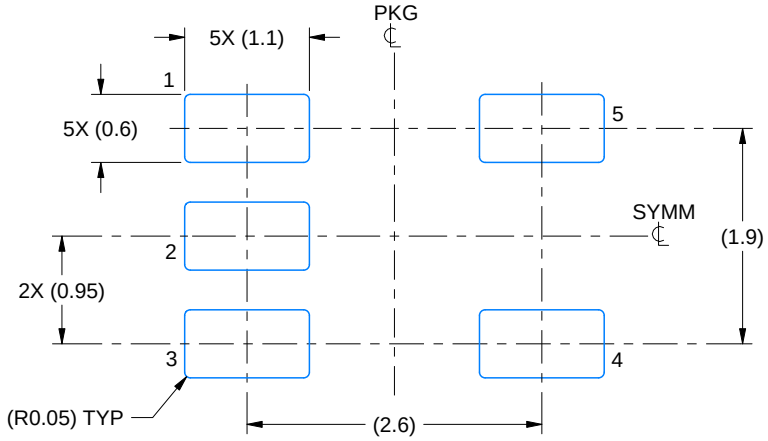

LAND PATTERN EXAMPLE
EXPOSED METAL SHOWN
SCALE:15X

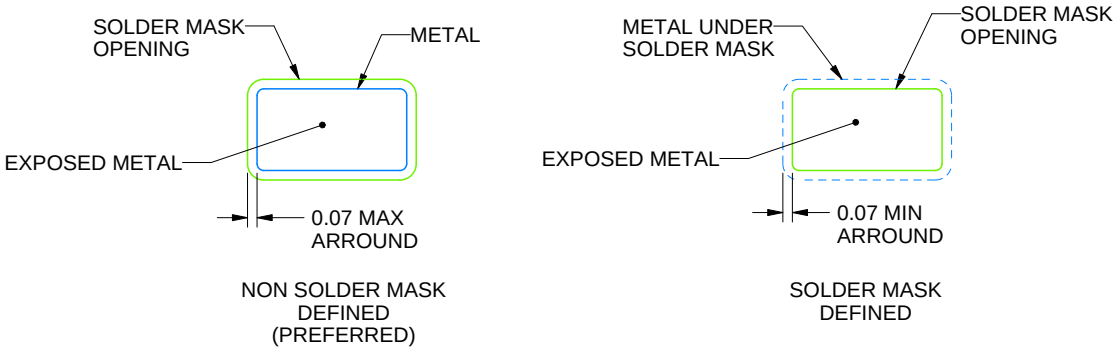

SOLDER MASK DETAILS

4214839/F 06/2021

NOTES: (continued)

5. Publication IPC-7351 may have alternate designs.
6. Solder mask tolerances between and around signal pads can vary based on board fabrication site.

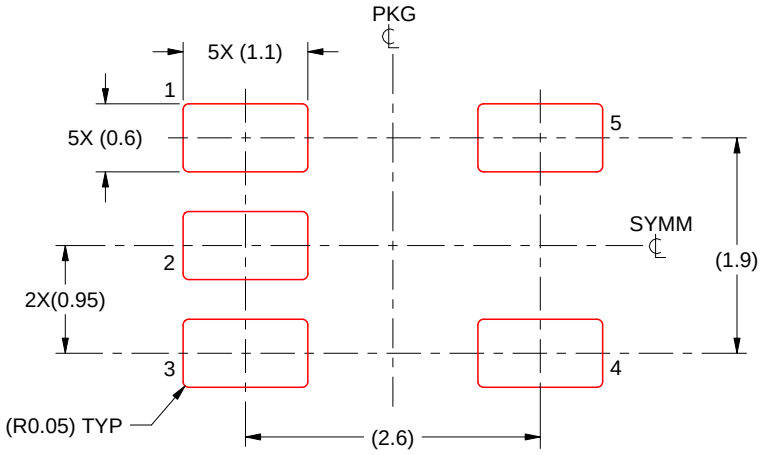

SOLDER PASTE EXAMPLE
BASED ON 0.125 mm THICK STENCIL
SCALE:15X

4214839/F 06/2021

NOTES: (continued)

7. Laser cutting apertures with trapezoidal walls and rounded corners may offer better paste release. IPC-7525 may have alternate design recommendations.
8. Board assembly site may have different recommendations for stencil design.

DDC (R–PDSO–G5) PLASTIC SMALL–OUTLINE

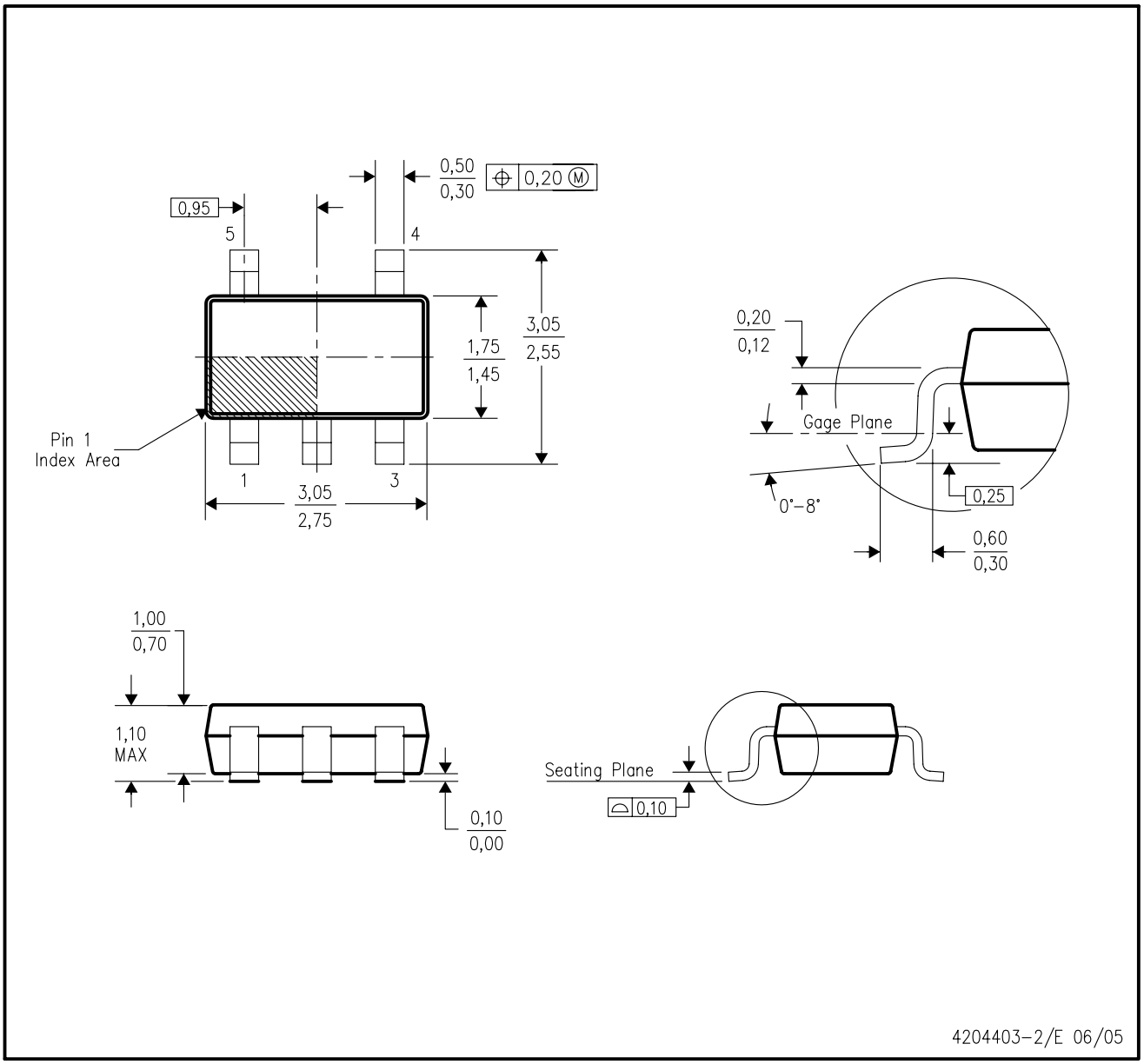

NOTES:
A. All linear dimensions are in millimeters.
B. This drawing is subject to change without notice.
C. Body dimensions do not include mold flash or protrusion.
D. Falls within JEDEC MO–193 variation AB (5 pin).

DSE (S–PDSO–N6) PLASTIC SMALL OUTLINE

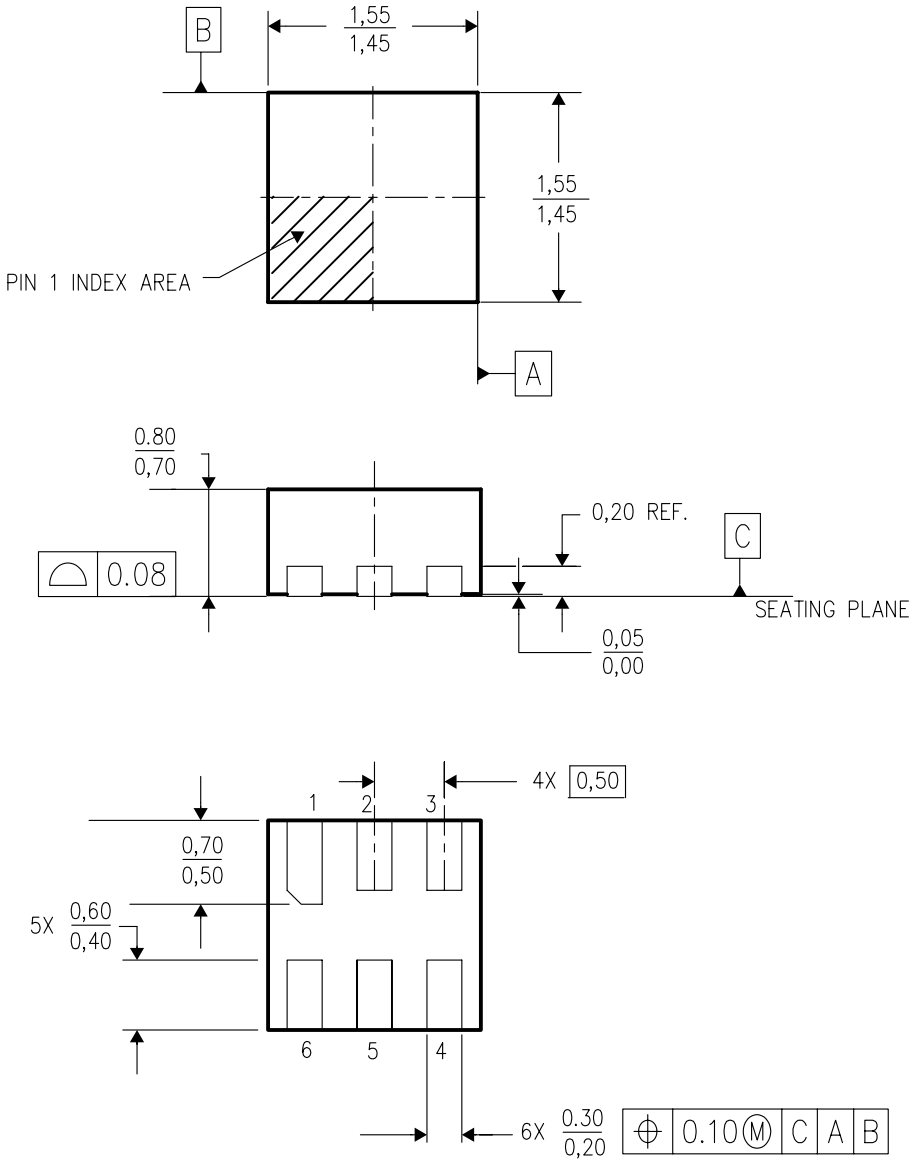

4207810/A 03/06

NOTES:
A. All linear dimensions are in millimeters.
B. This drawing is subject to change without notice.
C. Small Outline No–Lead (SON) package configuration.
D. This package is lead–free.

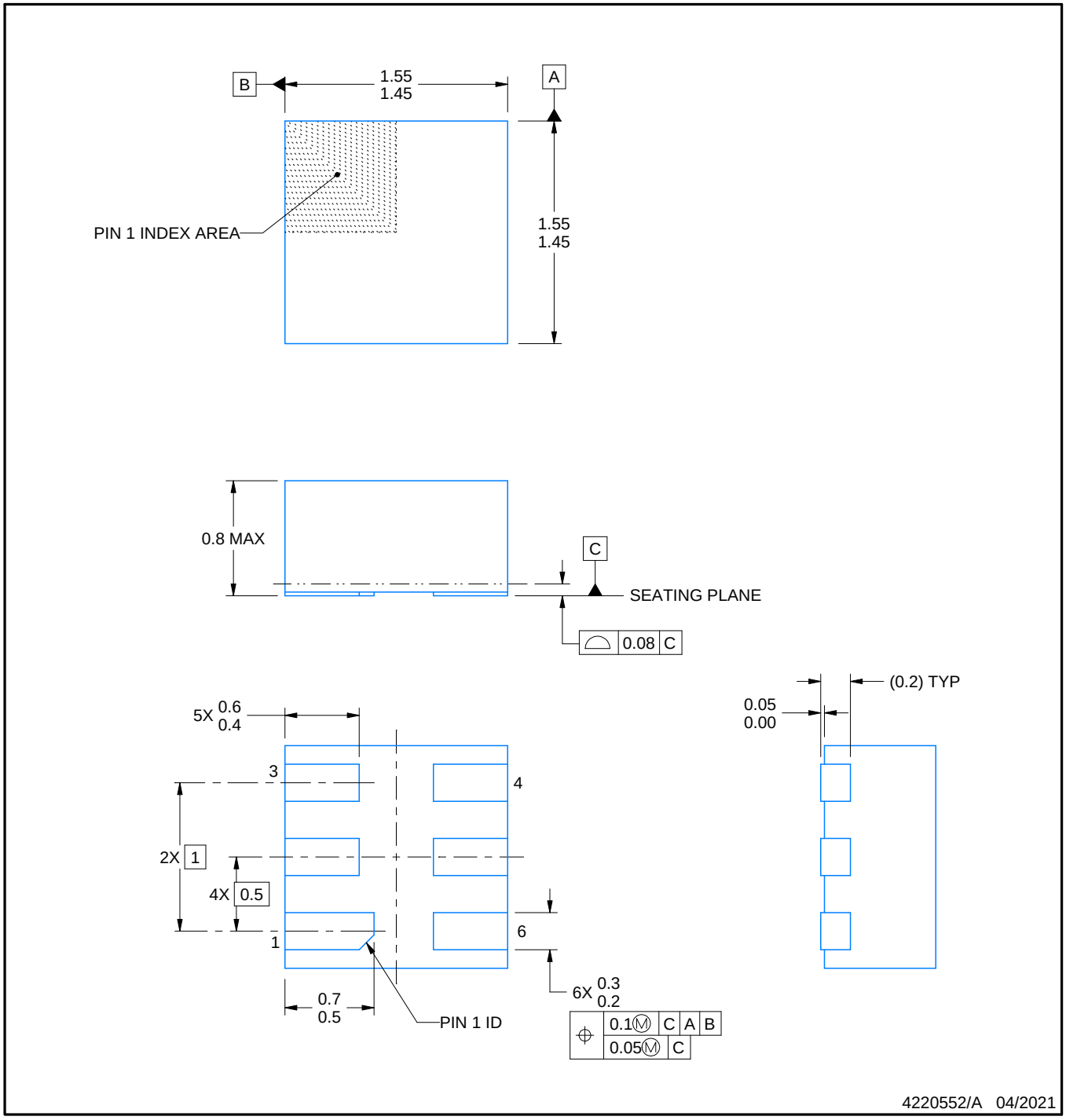

NOTES:

1. All linear dimensions are in millimeters. Any dimensions in parenthesis are for reference only. Dimensioning and tolerancing per ASME Y14.5M.
2. This drawing is subject to change without notice.

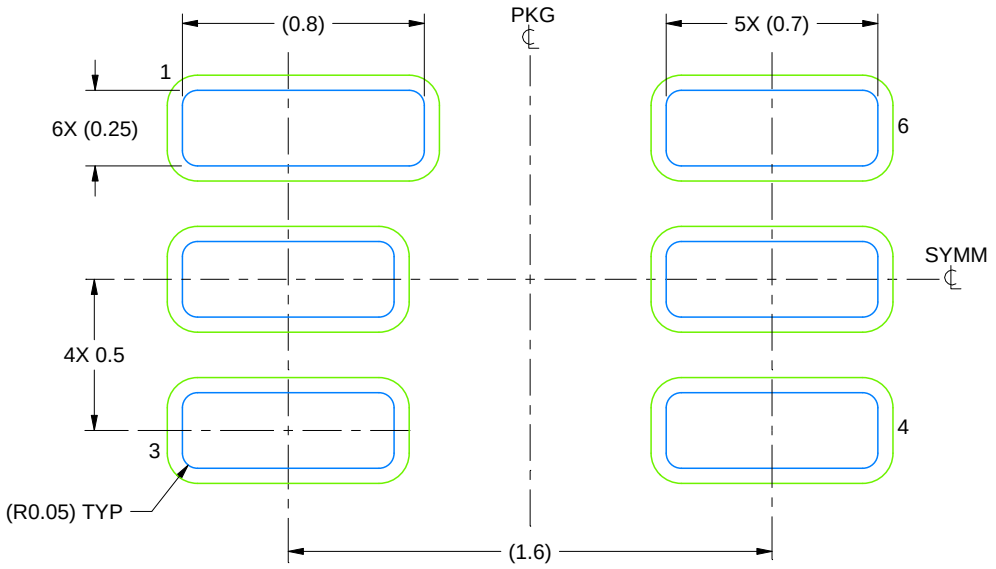

LAND PATTERN EXAMPLE
SCALE:40X

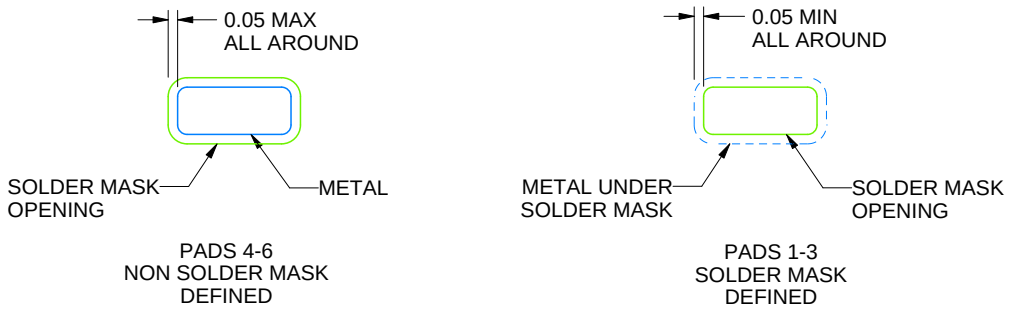

SOLDER MASK DETAILS

4220552/A 04/2021

NOTES: (continued)

3. For more information, see Texas Instruments literature number SLUA271 (www.ti.com/lit/slua271).

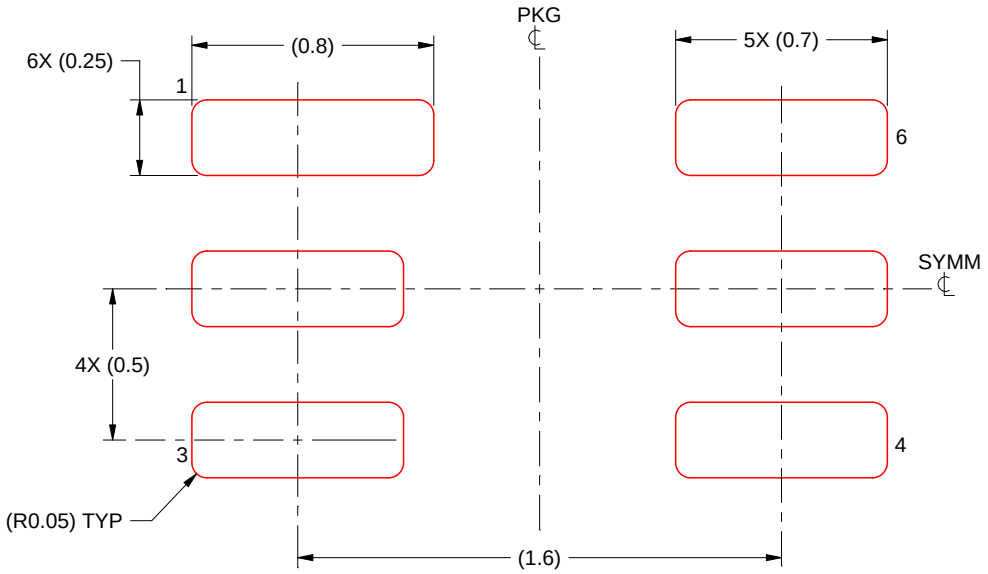

SOLDER PASTE EXAMPLE
BASED ON 0.125 mm THICK STENCIL
SCALE:40X

NOTES: (continued)

4. Laser cutting apertures with trapezoidal walls and rounded corners may offer better paste release. IPC-7525 may have alternate design recommendations.

重要声明和免责声明

TI“按原样”提供技术和可靠性数据（包括数据表）、设计资源（包括参考设计）、应用或其他设计建议、网络工具、安全信息和其他资源，不保证没有瑕疵且不做出任何明示或暗示的担保，包括但不限于对适销性、某特定用途方面的适用性或不侵犯任何第三方知识产权的暗示担保。

这些资源可供使用 TI 产品进行设计的熟练开发人员使用。您将自行承担以下全部责任：(1) 针对您的应用选择合适的 TI 产品，(2) 设计、验证并测试您的应用，(3) 确保您的应用满足相应标准以及任何其他功能安全、信息安全、监管或其他要求。

这些资源如有变更，恕不另行通知。TI 授权您仅可将这些资源用于研发本资源所述的 TI 产品的应用。严禁对这些资源进行其他复制或展示。您无权使用任何其他 TI 知识产权或任何第三方知识产权。您应全额赔偿因在这些资源的使用中对 TI 及其代表造成的任何索赔、损害、成本、损失和债务，TI 对此概不负责。

TI 提供的产品受 TI 的销售条款或 ti.com 上其他适用条款/TI 产品随附的其他适用条款的约束。TI 提供这些资源并不会扩展或以其他方式更改 TI 针对 TI 产品发布的适用的担保或担保免责声明。

TI 反对并拒绝您可能提出的任何其他或不同的条款。

邮寄地址：Texas Instruments, Post Office Box 655303, Dallas, Texas 75265
Copyright © 2021，德州仪器 (TI) 公司