SN74AUP1G126 Low-Power Single Bus Buffer Gate With Tri-State Output

1 Features

- Latch-Up Performance Exceeds 100 mA Per JESD 78, Class II
- ESD Performance Tested Per JESD 22−
  - 2000-V Human-Body Model (A114-B, Class II)
  - 1000-V Charged-Device Model (C101)
- Available in the Texas Instruments NanoStar™ Package
- Low Static-Power Consumption (I_{CC} = 0.9 µA Maximum)
- Low Dynamic-Power Consumption (C_{pd} = 4 pF Typical at 3.3 V)
- Low Input Capacitance (C_i = 1.5 pF Typical)
- Low Noise – Overshoot and Undershoot <10% of V_{CC}
- Input-Disable Feature Allows Floating Input Conditions
- I_{off} Supports Partial-Power-Down Mode Operation
- Input Hysteresis Allows Slow Input Transition and Better Switching Noise Immunity at Input
- Wide Operating V_{CC} Range of 0.8 V to 3.6 V
- Optimized for 3.3-V Operation
- 3.6-V I/O Tolerant to Support Mixed-Mode Signal Operation
- t_{pd} = 4.6 ns Maximum at 3.3 V
- Suitable for Point-to-Point Applications

2 Applications

- Audio Dock: Portable
- BluRay™ Players and Home Theaters
- Personal Digital Assistant (PDA)
- Power: Telecom/Server AC/DC Supply: Single Controller: Analog and Digital
- Solid-State Drive (SSD): Client and Enterprise
- TV: LCD/Digital and High-Definition (HDTV)
- Tablet: Enterprise
- Wireless Headsets, Keyboards, and Mice

3 Description

The AUP family is TI's premier solution to the industry's low-power needs in battery-powered portable applications. This family assures a very low static and dynamic power consumption across the entire V_{CC} range of 0.8 V to 3.6 V, resulting in an increased battery life. This product also maintains excellent signal integrity (see *AUP – The Lowest-Power Family* and *Excellent Signal Integrity*).

This bus buffer gate is a single line driver with a 3-state output. The output is disabled when the output-enable (OE) input is low. This device has the input-disable feature, which allows floating input signals.

To assure the high-impedance state during power up or power down, OE should be tied to GND through a pulldown resistor; the minimum value of the resistor is determined by the current-sourcing capability of the driver.

NanoStar™ package technology is a major breakthrough in IC packaging concepts, using the die as the package.

This device is fully specified for partial-power-down applications using I_{off}. The I_{off} circuitry disables the outputs when the device is powered down. This inhibits current backflow into the device which prevents damage to the device.

Device Information(1)

PART NUMBER	PACKAGE	BODY SIZE (NOM)
SN74AUP1G126DRL	SOT-5X3 (5)	1.60 mm × 1.20 mm
SN74AUP1G126DBV	SOT-23 (5)	1.60 mm × 2.90 mm
SN74AUP1G126DCK	SC70 (5)	1.25 mm × 2.00 mm
SN74AUP1G126DRY	SON (6)	1.00 mm × 1.45 mm
SN74AUP1G126DSF	SON (6)	1.00 mm × 1.00 mm
SN74AUP1G126YFP	DSBGA (6)	0.76 mm × 1.16 mm
SN74AUP1G126YZP	DSBGA (5)	0.89 mm × 1.39 mm
SN74AUP1G126DPW	X2SON (5)	0.80 mm × 0.80 mm

(1) For all available packages, see the orderable addendum at the end of the data sheet.

Logic Diagram (Positive Logic)

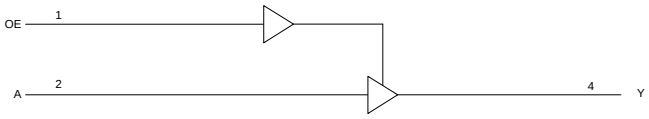

An IMPORTANT NOTICE at the end of this data sheet addresses availability, warranty, changes, use in safety-critical applications, intellectual property matters and other important disclaimers. PRODUCTION DATA.

Table of Contents

1 Features ... 1
2 Applications ... 1
3 Description ... 1
4 Revision History ... 2
5 Pin Configuration and Functions ... 3
6 Specifications ... 4
6.1 Absolute Maximum Ratings ... 4
6.2 ESD Ratings ... 4
6.3 Recommended Operating Conditions ... 4
6.4 Thermal Information ... 5
6.5 Electrical Characteristics ... 5
6.6 Switching Characteristics: C_L = 5 pF ... 7
6.7 Switching Characteristics: C_L = 10 pF ... 8
6.8 Switching Characteristics: C_L = 15 pF ... 9
6.9 Switching Characteristics: C_L = 30 pF ... 10
6.10 Operating Characteristics ... 11
6.11 Typical Characteristics ... 11
7 Parameter Measurement Information ... 12
7.1 (Propagation Delays, Setup and Hold Times, and Pulse Width) ... 12
7.2 (Enable and Disable Times) ... 13
8 Detailed Description ... 14
8.1 Overview ... 14
8.2 Functional Block Diagram ... 14
8.3 Feature Description ... 14
8.4 Device Functional Modes ... 15
9 Application and Implementation ... 16
9.1 Application Information ... 16
9.2 Typical Application ... 16
10 Power Supply Recommendations ... 17
11 Layout ... 17
11.1 Layout Guidelines ... 17
11.2 Layout Example ... 17
12 Device and Documentation Support ... 18
12.1 Documentation Support ... 18
12.2 Receiving Notification of Documentation Updates 18
12.3 Community Resources ... 18
12.4 Trademarks ... 18
12.5 Electrostatic Discharge Caution ... 18
12.6 Glossary ... 18
13 Mechanical, Packaging, and Orderable Information ... 18

4 Revision History

NOTE: Page numbers for previous revisions may differ from page numbers in the current version.

Changes from Revision F (May 2010) to Revision G	Page
• Added *Device Information* table, *Pin Configuration and Functions* section, *ESD Ratings* table, *Thermal Information* table, *Feature Description* section, *Application and Implementation* section, *Layout* section, *Device and Documentation Support* section, and *Mechanical, Packaging, and Orderable Information* section	1
• Deleted *Ordering Information* table, see *Mechanical, Packaging, and Orderable Information* at the end of the data sheet	1

Copyright © 2004–2017, Texas Instruments Incorporated

5 Pin Configuration and Functions

DBV Package
5-Pin SOT-23
Top View

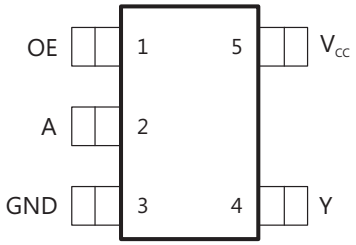

DKC Package
5-Pin SOT-23
Top View

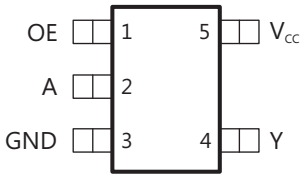

DRL Package
5-Pin SOT-5X3
Top View

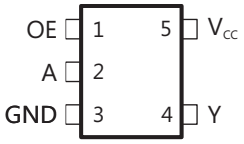

DPW Package
5-Pin X2SON
Top View

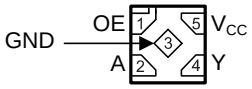

DRY Package
6-Pin SON
Top View

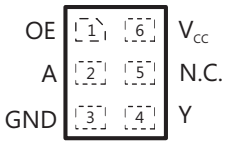

N.C. – No internal connection.

See mechanical drawings for dimensions.

DSF Package
6-Pin SON
Top View

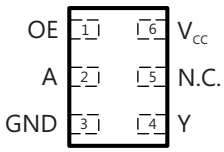

YFP Package
6-Pin DSBGA
Bottom View

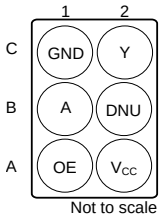

YZP Package
5-Pin DSBGA
Bottom View

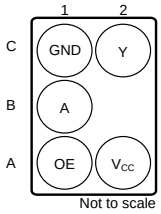

Pin Functions

PIN					I/O	DESCRIPTION
NAME	DBV, DCK, DRL, DPW	DRY, DSF	YFP	YZP		
A	2	2	B1	B1	I	Input
DNU	—	—	—	B2	—	Do not use
GND	3	3	C1	C1	—	Ground
N.C.	—	5	B2	—	—	No Internal Connection
OE	1	1	A1	A1	I	Output enable (active high)
V_{CC}	5	6	A2	A2	—	Positive supply
Y	4	4	C2	C2	O	Buffered output

Copyright © 2004–2017, Texas Instruments Incorporated

6 Specifications

6.1 Absolute Maximum Ratings

over operating free-air temperature range (unless otherwise noted)[1]

			MIN	MAX	UNIT
V_{CC}	Supply voltage		–0.5	4.6	V
V_I	Input voltage[2]		–0.5	4.6	V
V_O	Voltage range applied to any output in the high-impedance or power-off state[2]		–0.5	4.6	V
V_O	Output voltage range in the high or low state[2]		–0.5	V_{CC} + 0.5	V
I_{IK}	Input clamp current	$V_I < 0$		–50	mA
I_{OK}	Output clamp current	$V_O < 0$		–50	mA
I_O	Continuous output current			±20	mA
	Continuous current through V_{CC} or GND			±50	mA
T_j	Junction Temperature			150	°C
T_{stg}	Storage temperature		–65	150	°C

(1) Stresses beyond those listed under *Absolute Maximum Ratings* may cause permanent damage to the device. These are stress ratings only, which do not imply functional operation of the device at these or any other conditions beyond those indicated under *Recommended Operating Conditions*. Exposure to absolute-maximum-rated conditions for extended periods may affect device reliability.
(2) The input negative-voltage and output voltage ratings may be exceeded if the input and output current ratings are observed.

6.2 ESD Ratings

			VALUE	UNIT
$V_{(ESD)}$	Electrostatic discharge	Human-body model (HBM), per ANSI/ESDA/JEDEC JS-001[1]	2000	V
		Charged-device model (CDM), per JEDEC specification JESD22-C101[2]	1000	

(1) JEDEC document JEP155 states that 500-V HBM allows safe manufacturing with a standard ESD control process.
(2) JEDEC document JEP157 states that 250-V CDM allows safe manufacturing with a standard ESD control process.

6.3 Recommended Operating Conditions

See[1]

			MIN	MAX	UNIT
V_{CC}	Supply voltage		0.8	3.6	V
V_{IH}	High-level input voltage	V_{CC} = 0.8 V	V_{CC}	3.6	V
		V_{CC} = 1.1 V to 1.95 V	0.65 × V_{CC}	3.6	
		V_{CC} = 2.3 V to 2.7 V	1.6	3.6	
		V_{CC} = 3 V to 3.6 V	2	3.6	
V_{IL}	Low-level input voltage	V_{CC} = 0.8 V		0	V
		V_{CC} = 1.1 V to 1.95 V	0	0.35 × V_{CC}	
		V_{CC} = 2.3 V to 2.7 V	0	0.7	
		V_{CC} = 3 V to 3.6 V	0	0.9	
V_O	Output voltage	Active state	0	V_{CC}	V
		3-state	0	3.6	
I_{OH}	High-level output current	V_{CC} = 0.8 V		–20	µA
		V_{CC} = 1.1 V		–1.1	mA
		V_{CC} = 1.4 V		–1.7	
		V_{CC} = 1.65 V		–1.9	
		V_{CC} = 2.3 V		–3.1	
		V_{CC} = 3 V		–4	

(1) All unused inputs of the device must be held at V_{CC} or GND to assure proper device operation. See *Implications of Slow of Floating CMOS Inputs*.

Copyright © 2004–2017, Texas Instruments Incorporated

Recommended Operating Conditions (continued)

See[1]

			MIN	MAX	UNIT
I_{OL}	Low-level output current	V_{CC} = 0.8 V		20	µA
		V_{CC} = 1.1 V		1.1	mA
		V_{CC} = 1.4 V		1.7	
		V_{CC} = 1.65 V		1.9	
		V_{CC} = 2.3 V		3.1	
		V_{CC} = 3 V		4	
Δt/Δv	Input transition rise or fall rate	V_{CC} = 0.8 V to 3.6 V		200	ns/V
T_A	Operating free-air temperature		–40	85	°C

6.4 Thermal Information

THERMAL METRIC[1]		SN74AUP1G126								UNIT
		DRL (SOT-5X3)	DBV (SOT-23)	DCK (SC70)	DRY (SON)	DSF (SON)	DPW (X2SON)	YFP (DSBGA)	YZP (DSBGA)	
		5 PINS	5 PINS	5 PINS	6 PINS	6 PINS	5 PINS	6 PINS	5 PINS	
$R_{\theta JA}$	Junction-to-ambient thermal resistance	295.1	230.5	303.6	342.1	377.1	504.3	125.4	146.2	°C/W
$R_{\theta JC(top)}$	Junction-to-case (top) thermal resistance	131.0	172.7	203.8	233.1	187.7	234.9	1.9	1.4	°C/W
$R_{\theta JB}$	Junction-to-board thermal resistance	143.9	62.2	100.9	206.7	236.6	370.3	37.2	39.3	°C/W
ψ_{JT}	Junction-to-top characterization parameter	14.7	49.3	76.1	63.4	29.0	44.5	0.5	0.7	°C/W
ψ_{JB}	Junction-to-board characterization parameter	144.4	61.6	99.3	206.7	236.3	369.7	37.5	39.8	°C/W
$R_{\theta JC(bot)}$	Junction-to-case (bottom) thermal resistance	N/A	N/A	N/A	N/A	N/A	165.2	N/A	N/A	°C/W

(1) For more information about traditional and new thermal metrics, see the *Semiconductor and IC Package Thermal Metrics* application report.

6.5 Electrical Characteristics

over recommended operating free-air temperature range (unless otherwise noted)

PARAMETER	TEST CONDITIONS		V_{CC}	MIN	TYP	MAX	UNIT
V_{OH}	I_{OH} = –20 µA	T_A = 25°C	0.8 V to 3.6 V	V_{CC} – 0.1			V
		T_A = –40°C to +85°C		V_{CC} – 0.1			
	I_{OH} = –1.1 mA	T_A = 25°C	1.1 V	0.75 × V_{CC}			
		T_A = –40°C to +85°C		0.7 × V_{CC}			
	I_{OH} = –1.7 mA	T_A = 25°C	1.4 V	1.11			
		T_A = –40°C to +85°C		1.03			
	I_{OH} = –1.9 mA	T_A = 25°C	1.65 V	1.32			
		T_A = –40°C to +85°C		1.3			
	I_{OH} = –2.3 mA	T_A = 25°C	2.3 V	2.05			
		T_A = –40°C to +85°C		1.97			
	I_{OH} = –3.1 mA	T_A = 25°C		1.9			
		T_A = –40°C to +85°C		1.85			
	I_{OH} = –2.7 mA	T_A = 25°C	3 V	2.72			
		T_A = –40°C to +85°C		2.67			
	I_{OH} = –4 mA	T_A = 25°C		2.6			
		T_A = –40°C to +85°C		2.55			

Copyright © 2004–2017, Texas Instruments Incorporated

Electrical Characteristics (continued)

over recommended operating free-air temperature range (unless otherwise noted)

PARAMETER		TEST CONDITIONS		V_{CC}	MIN	TYP	MAX	UNIT
V_{OL}		I_{OL} = 20 µA	T_A = 25°C	0.8 V to 3.6 V			0.1	V
			T_A = –40°C to +85°C				0.1	
		I_{OL} = 1.1 mA	T_A = 25°C	1.1 V			0.3 × V_{CC}	
			T_A = –40°C to +85°C				0.3 × V_{CC}	
		I_{OL} = 1.7 mA	T_A = 25°C	1.4 V			0.31	
			T_A = –40°C to +85°C				0.37	
		I_{OL} = 1.9 mA	T_A = 25°C	1.65 V			0.31	
			T_A = –40°C to +85°C				0.35	
		I_{OL} = 2.3 mA	T_A = 25°C	2.3 V			0.31	
			T_A = –40°C to +85°C				0.33	
		I_{OL} = 3.1 mA	T_A = 25°C				0.44	
			T_A = –40°C to +85°C				0.45	
		I_{OL} = 2.7 mA	T_A = 25°C	3 V			0.31	
			T_A = –40°C to +85°C				0.33	
		I_{OL} = 4 mA	T_A = 25°C				0.44	
			T_A = –40°C to +85°C				0.45	
I_I	A or OE input	V_I = GND to 3.6 V	T_A = 25°C	0 V to 3.6 V			0.1	µA
			T_A = –40°C to +85°C				0.5	
I_{off}		V_I or V_O = 0 V to 3.6 V	T_A = 25°C	0 V			0.2	µA
			T_A = –40°C to +85°C				0.6	
ΔI_{off}		V_I or V_O = 0 V to 3.6 V	T_A = 25°C	0 V to 0.2 V			0.2	µA
			T_A = –40°C to +85°C				0.6	
I_{OZ}		V_O = V_{CC} or GND, T_A = –40°C to +85°C		3.6 V			0.5	µA
I_{CC}		V_I = GND or (V_{CC} to 3.6 V), OE = GND, I_O = 0	T_A = 25°C	0.8 V to 3.6 V			0.5	µA
			T_A = –40°C to +85°C				0.9	
ΔI_{CC}	A input	V_I = V_{CC} – 0.6 V(1), I_O = 0	T_A = 25°C	3.3 V			40	µA
			T_A = –40°C to +85°C				50	
	OE input		T_A = 25°C				110	
			T_A = –40°C to +85°C				120	
	All inputs	V_I = GND to 3.6 V, OE = V_{CC} (2), T_A = 25°C or T_A = –40°C to +85°C		0.8 V to 3.6 V			0	
C_i		V_I = V_{CC} or GND, T_A = 25°C		0 V		1.5		pF
				3.6 V		1.5		
C_o		V_O = V_{CC} or GND, T_A = 25°C		3.6 V		3		pF

(1) One input at V_{CC} – 0.6 V, other input at V_{CC} or GND
(2) To show I_{CC} is very low when the input-disable feature is enabled

Copyright © 2004–2017, Texas Instruments Incorporated

6.6 Switching Characteristics: C_L = 5 pF

over recommended operating free-air temperature range, C_L = 5 pF (unless otherwise noted) (see Figure 2 and Figure 3)

PARAMETER	FROM (INPUT)	TO (OUTPUT)	TEST CONDITIONS		MIN	TYP	MAX	UNIT
t_{pd}	A	Y	V_{CC} = 0.8 V	T_A = 25°C		18.1		ns
			V_{CC} = 1.2 V ± 0.1 V	T_A = 25°C	4.3	7.4	12.6	
				T_A = –40°C to +85°C	2.7		15.3	
			V_{CC} = 1.5 V ± 0.1 V	T_A = 25°C	3.3	5.2	8.5	
				T_A = –40°C to +85°C	1		10.2	
			V_{CC} = 1.8 V ± 0.15 V	T_A = 25°C	2.6	4.1	6.8	
				T_A = –40°C to +85°C	1.3		8.3	
			V_{CC} = 2.5 V ± 0.2 V	T_A = 25°C	2	2.9	4.7	
				T_A = –40°C to +85°C	1.1		5.8	
			V_{CC} = 3.3 V ± 0.3 V	T_A = 25°C	1.7	2.4	3.8	
				T_A = –40°C to +85°C	1		4.6	
t_{en}	OE	Y	V_{CC} = 0.8 V	T_A = 25°C		19.1		ns
			V_{CC} = 1.2 V ± 0.1 V	T_A = 25°C	5.1	9.3	15.9	
				T_A = –40°C to +85°C	3.6		19.2	
			V_{CC} = 1.5 V ± 0.1 V	T_A = 25°C	4.1	6.6	10.5	
				T_A = –40°C to +85°C	2.5		12.7	
			V_{CC} = 1.8 V ± 0.15 V	T_A = 25°C	3.2	5.3	8.7	
				T_A = –40°C to +85°C	2.1		10.3	
			V_{CC} = 2.5 V ± 0.2 V	T_A = 25°C	2.5	3.8	6	
				T_A = –40°C to +85°C	1.6		7.2	
			V_{CC} = 3.3 V ± 0.3 V	T_A = 25°C	2.1	3.2	4.9	
				T_A = –40°C to +85°C	1.4		5.9	
t_{dis}	OE	Y	V_{CC} = 0.8 V	T_A = 25°C		12.1		ns
			V_{CC} = 1.2 V ± 0.1 V	T_A = 25°C	2.4	4.1	6.9	
				T_A = –40°C to +85°C	2.2		7.7	
			V_{CC} = 1.5 V ± 0.1 V	T_A = 25°C	1.8	2.9	4.5	
				T_A = –40°C to +85°C	1.7		5.1	
			V_{CC} = 1.8 V ± 0.15 V	T_A = 25°C	1	2.9	4.3	
				T_A = –40°C to +85°C	1.5		4.7	
			V_{CC} = 2.5 V ± 0.2 V	T_A = 25°C	1	1.8	2.7	
				T_A = –40°C to +85°C	1		3.3	
			V_{CC} = 3.3 V ± 0.3 V	T_A = 25°C	1.2	2.2	3.2	
				T_A = –40°C to +85°C	1.1		4	

Copyright © 2004–2017, Texas Instruments Incorporated

6.7 Switching Characteristics: C_L = 10 pF

over recommended operating free-air temperature range, C_L = 10 pF (unless otherwise noted) (see Figure 2 and Figure 3)

PARAMETER	FROM (INPUT)	TO (OUTPUT)	TEST CONDITIONS		MIN	TYP	MAX	UNIT
t_{pd}	A or B	Y	V_{CC} = 0.8 V	T_A = 25°C		20.5	13.7	ns
			V_{CC} = 1.2 V ± 0.1 V	T_A = 25°C	4.6	8.4	9.3	
				T_A = –40°C to +85°C	3.6		16.6	
			V_{CC} = 1.5 V ± 0.1 V	T_A = 25°C	3.5	5.9	7.5	
				T_A = –40°C to +85°C	2.4		11.1	
			V_{CC} = 1.8 V ± 0.15 V	T_A = 25°C	3.9	4.7	5.3	
				T_A = –40°C to +85°C	1.3		9.1	
			V_{CC} = 2.5 V ± 0.2 V	T_A = 25°C	2.3	3.4	4.3	
				T_A = –40°C to +85°C	1.6		6.4	
			V_{CC} = 3.3 V ± 0.3 V	T_A = 25°C	2.1	2.8		
				T_A = –40°C to +85°C	1.4		5.2	
t_{en}	OE	Y	V_{CC} = 0.8 V	T_A = 25°C		21.8	16.8	ns
			V_{CC} = 1.2 V ± 0.1 V	T_A = 25°C	4.9	10.2	11.2	
				T_A = –40°C to +85°C	4.4		20.2	
			V_{CC} = 1.5 V ± 0.1 V	T_A = 25°C	3.9	7.3	9.2	
				T_A = –40°C to +85°C	3.3		13.5	
			V_{CC} = 1.8 V ± 0.15 V	T_A = 25°C	3.4	5.8	6.4	
				T_A = –40°C to +85°C	2.7		11	
			V_{CC} = 2.5 V ± 0.2 V	T_A = 25°C	2.5	4.3	5.4	
				T_A = –40°C to +85°C	2.1		7.8	
			V_{CC} = 3.3 V ± 0.3 V	T_A = 25°C	2.1	3.7		
				T_A = –40°C to +85°C	1.9		6.4	
t_{dis}	OE	Y	V_{CC} = 0.8 V	T_A = 25°C		13		ns
			V_{CC} = 1.2 V ± 0.1 V	T_A = 25°C	3.8	6.6	11.7	
				T_A = –40°C to +85°C	1.2		14	
			V_{CC} = 1.5 V ± 0.1 V	T_A = 25°C	2.2	4.7	7.9	
				T_A = –40°C to +85°C	1.3		9.3	
			V_{CC} = 1.8 V ± 0.15 V	T_A = 25°C	2.4	4.4	6.4	
				T_A = –40°C to +85°C	2.2		7.5	
			V_{CC} = 2.5 V ± 0.2 V	T_A = 25°C	1.3	3.1	4.9	
				T_A = –40°C to +85°C	1.2		5.4	
			V_{CC} = 3.3 V ± 0.3 V	T_A = 25°C	1.9	3.4	5	
				T_A = –40°C to +85°C	1.9		5.6	

Copyright © 2004–2017, Texas Instruments Incorporated

6.8 Switching Characteristics: C_L = 15 pF

over recommended operating free-air temperature range, C_L = 15 pF (unless otherwise noted) (see Figure 2 and Figure 3)

PARAMETER	FROM (INPUT)	TO (OUTPUT)	TEST CONDITIONS		MIN	TYP	MAX	UNIT
t_{pd}	A or B	Y	V_{CC} = 0.8 V	T_A = 25°C		22.5		ns
			V_{CC} = 1.2 V ± 0.1 V	T_A = 25°C	5.8	9.3	15.1	
				T_A = –40°C to +85°C	4.3		17.9	
			V_{CC} = 1.5 V ± 0.1 V	T_A = 25°C	4.4	6.6	10.2	
				T_A = –40°C to +85°C	3		12.1	
			V_{CC} = 1.8 V ± 0.15 V	T_A = 25°C	3.5	5.3	8.3	
				T_A = –40°C to +85°C	2.3		9.9	
			V_{CC} = 2.5 V ± 0.2 V	T_A = 25°C	2.7	3.9	5.8	
				T_A = –40°C to +85°C	1.9		7	
			V_{CC} = 3.3 V ± 0.3 V	T_A = 25°C	2.4	3.2	4.7	
				T_A = –40°C to +85°C	1.8		5.7	
t_{en}	OE	Y	V_{CC} = 0.8 V	T_A = 25°C		25.2		ns
			V_{CC} = 1.2 V ± 0.1 V	T_A = 25°C	7	11.3	18.1	
				T_A = –40°C to +85°C	5.4		21.4	
			V_{CC} = 1.5 V ± 0.1 V	T_A = 25°C	5.5	8.1	12.2	
				T_A = –40°C to +85°C	4.1		14.5	
			V_{CC} = 1.8 V ± 0.15 V	T_A = 25°C	4.3	6.5	10.1	
				T_A = –40°C to +85°C	3.3		12	
			V_{CC} = 2.5 V ± 0.2 V	T_A = 25°C	3.4	4.8	7.1	
				T_A = –40°C to +85°C	2.6		8.4	
			V_{CC} = 3.3 V ± 0.3 V	T_A = 25°C	2.9	4.1	5.9	
				T_A = –40°C to +85°C	2.3		6.9	
t_{dis}	OE	Y	V_{CC} = 0.8 V	T_A = 25°C		14		ns
			V_{CC} = 1.2 V ± 0.1 V	T_A = 25°C	3.7	5.8	8.2	
				T_A = –40°C to +85°C	3.3		11	
			V_{CC} = 1.5 V ± 0.1 V	T_A = 25°C	5.5	3.9	5.9	
				T_A = –40°C to +85°C	2.1		8	
			V_{CC} = 1.8 V ± 0.15 V	T_A = 25°C	3.3	4.5	6.6	
				T_A = –40°C to +85°C	2.9		7.4	
			V_{CC} = 2.5 V ± 0.2 V	T_A = 25°C	2.3	3.2	4.3	
				T_A = –40°C to +85°C	1.8		5.1	
			V_{CC} = 3.3 V ± 0.3 V	T_A = 25°C	2.4	4.8	6.2	
				T_A = –40°C to +85°C	3.1		6.7	

Copyright © 2004–2017, Texas Instruments Incorporated

6.9 Switching Characteristics: C_L = 30 pF

over recommended operating free-air temperature range, C_L = 30 pF (unless otherwise noted) (see Figure 2 and Figure 3)

PARAMETER	FROM (INPUT)	TO (OUTPUT)	TEST CONDITIONS		MIN	TYP	MAX	UNIT
t_{pd}	A or B	Y	V_{CC} = 0.8 V	T_A = 25°C		29		ns
			V_{CC} = 1.2 V ± 0.1 V	T_A = 25°C	7.4	12	18.7	
				T_A = –40°C to +85°C	6.6		21.4	
			V_{CC} = 1.5 V ± 0.1 V	T_A = 25°C	5.7	8.6	12.5	
				T_A = –40°C to +85°C	4.9		14.7	
			V_{CC} = 1.8 V ± 0.15 V	T_A = 25°C	4.8	6.9	10.1	
				T_A = –40°C to +85°C	3.1		12	
			V_{CC} = 2.5 V ± 0.2 V	T_A = 25°C	3.9	5.1	7.2	
				T_A = –40°C to +85°C	3.3		8.7	
			V_{CC} = 3.3 V ± 0.3 V	T_A = 25°C	3.5	4.8	6	
				T_A = –40°C to +85°C	3		7	
t_{en}	OE	Y	V_{CC} = 0.8 V	T_A = 25°C		33.4		ns
			V_{CC} = 1.2 V ± 0.1 V	T_A = 25°C	8.8	14.1	21.8	
				T_A = –40°C to +85°C	7.4		25.5	
			V_{CC} = 1.5 V ± 0.1 V	T_A = 25°C	6.9	10.1	14.6	
				T_A = –40°C to +85°C	5.6		17.4	
			V_{CC} = 1.8 V ± 0.15 V	T_A = 25°C	5.6	8.1	12	
				T_A = –40°C to +85°C	4.7		14.1	
			V_{CC} = 2.5 V ± 0.2 V	T_A = 25°C	4.3	6.1	8.5	
				T_A = –40°C to +85°C	3.8		10	
			V_{CC} = 3.3 V ± 0.3 V	T_A = 25°C	3.7	5.2	7.1	
				T_A = –40°C to +85°C	3.4		8.3	
t_{dis}	OE	Y	V_{CC} = 0.8 V	T_A = 25°C		17.7		ns
			V_{CC} = 1.2 V ± 0.1 V	T_A = 25°C	5.8	10	16	
				T_A = –40°C to +85°C	3.7		16	
			V_{CC} = 1.5 V ± 0.1 V	T_A = 25°C	5.7	7.7	10.9	
				T_A = –40°C to +85°C	1		10.7	
			V_{CC} = 1.8 V ± 0.15 V	T_A = 25°C	4.5	7.7	9.8	
				T_A = –40°C to +85°C	4.4		12.5	
			V_{CC} = 2.5 V ± 0.2 V	T_A = 25°C	3.9	5.6	7.4	
				T_A = –40°C to +85°C	3.2		9	
			V_{CC} = 3.3 V ± 0.3 V	T_A = 25°C	3.3	8.4	10.7	
				T_A = –40°C to +85°C	6.6		10.8	

Copyright © 2004–2017, Texas Instruments Incorporated

6.10 Operating Characteristics

T_A = 25°C

PARAMETER			TEST CONDITIONS	V_{CC}	TYP	UNIT
C_{pd}	Power dissipation capacitance	Output enabled	f = 10 MHz	0.8 V	3.8	pF
				1.2 V ± 0.1 V	3.7	
				1.5 V ±0.1 V	3.7	
				1.8 V ± 0.15 V	3.7	
				2.5 V ± 0.2 V	3.9	
				3.3 V ± 0.3 V	4	
		Output disabled	f = 10 MHz	0.8 V	0	
				1.2 V ± 0.1 V	0	
				1.5 V ±0.1 V	0	
				1.8 V ± 0.15 V	0	
				2.5 V ± 0.2 V	0	
				2.5 V ± 0.2 V	0	
				3.3 V ± 0.3 V	0	

6.11 Typical Characteristics

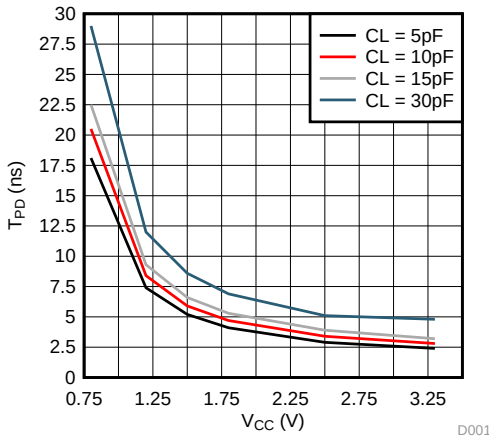

Figure 1. Propagation Delay vs. Supply Voltage and Load Capacitance

7 Parameter Measurement Information

7.1 (Propagation Delays, Setup and Hold Times, and Pulse Width)

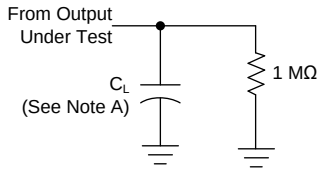

Load Circut

	V_{CC} = 0.8 V	V_{CC} = 1.2 V ± 0.1 V	V_{CC} = 1.5 V ± 0.1 V	V_{CC} = 1.8 V ± 0.15 V	V_{CC} = 2.5 V ± 0.2 V	V_{CC} = 3.3 V ± 0.3 V
C_L V_M V_I	5, 10, 15, 30 pF V_{CC} / 2 V_{CC}	5, 10, 15, 30 pF V_{CC} / 2 V_{CC}	5, 10, 15, 30 pF V_{CC} / 2 V_{CC}	5, 10, 15, 30 pF V_{CC} / 2 V_{CC}	5, 10, 15, 30 pF V_{CC} / 2 V_{CC}	5, 10, 15, 30 pF V_{CC} / 2 V_{CC}

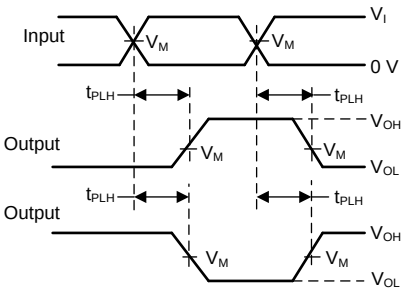

Voltage Waveforms Propagation Delay
Times Inverting and Noninverting Outputs

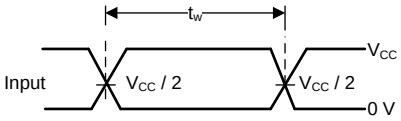

Voltage Waveforms
Pulse Duration

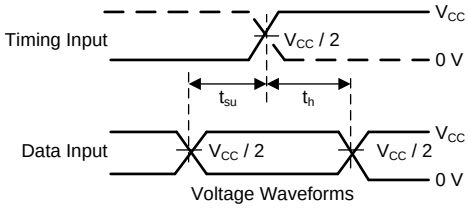

Voltage Waveforms
Setup and Hold Times

Notes:
A. C_L includes probe and jig capacitance.
B. All input pulses are supplied by generators having the following characteristics: PRR ≤ 10 MHz, Z_O = 50 Ω, t_r / t_f = 3 ns.
C. The outputs are measured one at a time, with one transition per measurement.
D. t_{PLH} And t_{PHL} Are the same as T_{pd}.
E. All parameters and waveforms are not applicable in all devices.

Figure 2. Load Circuit and Voltage Waveforms

Copyright © 2004–2017, Texas Instruments Incorporated

7.2 (Enable and Disable Times)

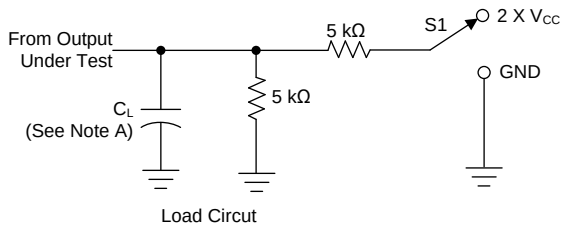

Test	S1
t_{PLZ} / t_{PZL} t_{PHZ} / t_{PZH}	2 x V_{CC} GND

	V_{CC} = 0.8 V	V_{CC} = 1.2 V ± 0.1 V	V_{CC} = 1.5 V ± 0.1 V	V_{CC} = 1.8 V ± 0.15 V	V_{CC} = 2.5 V ± 0.2 V	V_{CC} = 3.3 V ± 0.3 V
C_L V_M V_I V_Δ	5, 10, 15, 30 pF V_{CC} / 2 V_{CC}	5, 10, 15, 30 pF V_{CC} / 2 V_{CC}	5, 10, 15, 30 pF V_{CC} / 2 V_{CC}	5, 10, 15, 30 pF V_{CC} / 2 V_{CC}	5, 10, 15, 30 pF V_{CC} / 2 V_{CC}	5, 10, 15, 30 pF V_{CC} / 2 V_{CC}

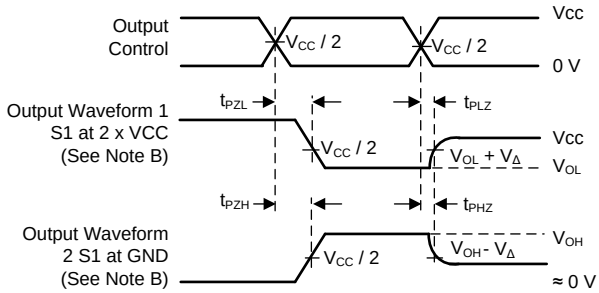

Voltage Waveforms Propagation Delay
Times Inverting and Noninverting Outputs

Notes:
A. C_L includes probe and jig capacitance.
B. Waveform 1 is for an output with internal conditions such that the output is low, except when disabled by the output control. Waveform 2 is for an output with internal conditions such tht the output is high, except when disabled by the output control.
C. All input pulses are supplied by generators having the following characteristics: PRR ≤ 10 MHz, Z_O= 50 Ω, t_r / t_f = 3 ns
D. The outputs are measured one at a time, with one transmision per measurement.
E. t_{PLZ} and t_{PHZ} are the same as t_{dis}.
F. t_{PZL} and t_{PZH} are the same as t_{en}.
G. All parameters and waveforms are not applicable to all devices.

Figure 3. Load Circuit and Voltage Waveforms

8 Detailed Description

8.1 Overview

The AUP family is TI's premier solution to the industry's low-power needs in battery-powered portable applications. This family of devices is specified for low static and dynamic power consumption across the entire V_{CC} range of 0.8 V to 3.6 V, resulting in an increased battery life. This product also maintains excellent signal integrity (see Figure 7 and Figure 8).

The SN74AUP1G126 device contains one buffer gate device with output enable control and performs the Boolean function Y = A. This device is fully specified for partial-power-down applications using I_{off} . The I_{off} circuitry disables the outputs when the device is powered down. This inhibits current backflow into the device which prevents damage to the device.

To assure the high-impedance state during power up or power down, OE must be tied to GND through a pullup resistor; the minimum value of the resistor is determined by the current-sinking capability of the driver.

8.2 Functional Block Diagram

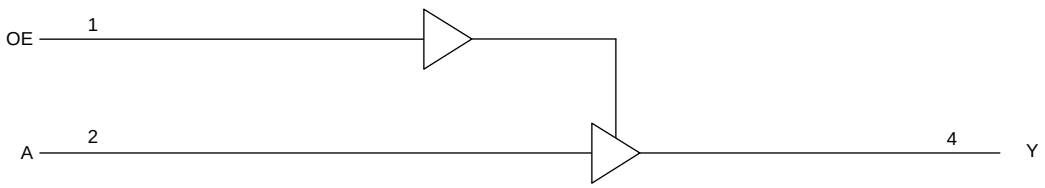

Figure 4. Logic Diagram (Positive Logic)

8.3 Feature Description

8.3.1 Balanced CMOS Push-Pull Outputs

A balanced output allows the device to sink and source similar currents. The drive capability of this device creates fast edges into light loads so routing and load conditions should be considered to prevent ringing. Additionally, the outputs of this device are capable of driving larger currents than the device can sustain without being damaged. It is important for the power output of the device to be limited to avoid thermal runaway and damage due to over-current. The electrical and thermal limits defined the in the *Absolute Maximum Ratings* must be followed at all times.

8.3.2 Standard CMOS Inputs

Standard CMOS inputs are high impedance and are typically modelled as a resistor in parallel with the input capacitance given in the *Electrical Characteristics*. The worst case resistance is calculated with the maximum input voltage, given in the *Absolute Maximum Ratings*, and the maximum input leakage current, given in the *Electrical Characteristics*, using ohm's law (R = V ÷ I).

Signals applied to the inputs must have fast edge rates, as defined by Δt/Δv in *Recommended Operating Conditions* to avoid excessive currents and oscillations. If a slow or noisy input signal is required, a device with a Schmitt-trigger input should be used to condition the input signal prior to the standard CMOS input.

Copyright © 2004–2017, Texas Instruments Incorporated

Feature Description (continued)

8.3.3 Clamp Diodes

The inputs and outputs to this device have negative clamping diodes.

CAUTION

Voltages beyond the values specified in the *Absolute Maximum Ratings* table can cause damage to the device. The input negative-voltage and output voltage ratings may be exceeded if the input and output clamp-current ratings are observed.

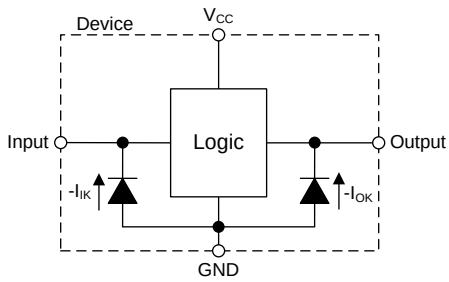

Figure 5. Electrical Placement of Clamping Diodes for Each Input and Output

8.3.4 Partial Power Down (I_{off})

The inputs and outputs for this device enter a high-impedance state when the supply voltage is 0 V. The maximum leakage into or out of any input or output pin on the device is specified by I_{off} in the *Electrical Characteristics*.

8.3.5 Overvoltage Tolerant Inputs

Input signals to this device can be driven above the supply voltage so long as they remain below the maximum input voltage value specified in the *Absolute Maximum Ratings*.

8.3.6 Output Enable

This device has an output enable (OE) pin that functions according to Table 1. When the outputs of the device are disabled, they are placed into a high impedance state where it will neither source nor sink current. High-impedance outputs are also commonly referred to as three-state or tri-state outputs. The maximum leakage for the output in this state is defined by I_{OZ} in the *Electrical Characteristics* table.

8.4 Device Functional Modes

Table 1 lists the functional modes of the SN74AUP1G126 device.

Table 1. Function Table

INPUTS		OUTPUT Y
OE	A	
H	H	H
H	L	L
L	X	Z

9 Application and Implementation

NOTE

Information in the following applications sections is not part of the TI component specification, and TI does not warrant its accuracy or completeness. TI's customers are responsible for determining suitability of components for their purposes. Customers should validate and test their design implementation to confirm system functionality.

9.1 Application Information

The SN74AUP1G126 device is an output enabled CMOS buffer that can be used in LED indicator applications that require less than 4 mA. The device can produce up to 4 mA of drive current at 3.3 V. The inputs to the device are also overvoltage tolerant up to 3.6 V, allowing it to translate down to any valid V_{CC}.

9.2 Typical Application

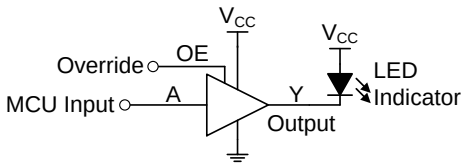

Figure 6. Application Schematic with MCU driving an LED Indicator

9.2.1 Design Requirements

This device uses CMOS technology and has balanced output drive. Take care to avoid bus contention because it can drive currents that would exceed maximum limits. The output drive strength of this device creates fast edges into light loads so routing and load conditions should be considered to prevent ringing.

9.2.2 Detailed Design Procedure

1. Recommended Input Conditions
   - Rise time and fall time specs. See ($\Delta t/\Delta V$) in the *Recommended Operating Conditions* table.
   - Specified high and low levels. See (V_{IH} and V_{IL}) in the *Recommended Operating Conditions* table.
   - Inputs are overvoltage tolerant allowing them to go as high as (V_I max) in the *Recommended Operating Conditions* table at any valid V_{CC}.
2. Recommended Output Conditions
   - Load currents should not exceed (I_O max) per output and should not exceed (Continuous current through V_{CC} or GND) total current for the part. These limits are located in the *Absolute Maximum Ratings* table.
   - Outputs should not be pulled above V_{CC}.

9.2.3 Application Curves

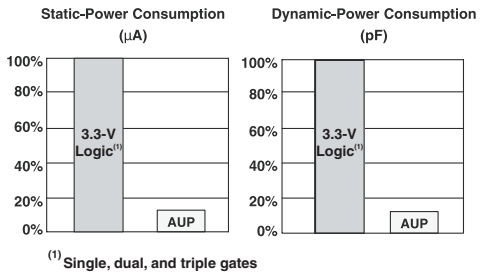

Figure 7. AUP – The Lowest-Power Family

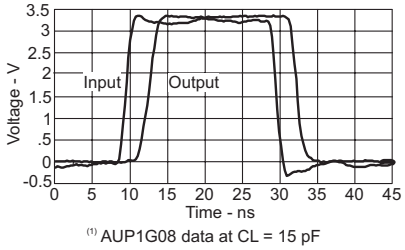

Figure 8. Excellent Signal Integrity

Copyright © 2004–2017, Texas Instruments Incorporated

10 Power Supply Recommendations

The power supply can be any voltage between the minimum and maximum supply voltage rating located in the *Recommended Operating Conditions* table.

The VCC pin must have a good bypass capacitor to prevent power disturbance. TI recommends to use a 0.1-µF capacitor for this device. It is ok to parallel multiple bypass caps to reject different frequencies of noise. 0.1-µF and 1-µF capacitors are commonly used in parallel. Install the bypass capacitor as close to the power pin as possible for best results.

11 Layout

11.1 Layout Guidelines

Even low data rate digital signals can contain high-frequency signal components due to fast edge rates. When a printed-circuit board (PCB) trace turns a corner at a 90° angle, a reflection can occur. A reflection occurs primarily because of the change of width of the trace. At the apex of the turn, the trace width increases to 1.414 times the width. This increase upsets the transmission-line characteristics, especially the distributed capacitance and self–inductance of the trace which results in the reflection. Not all PCB traces can be straight and therefore some traces must turn corners. shows progressively better techniques of rounding corners. Only the last example (BEST) maintains constant trace width and minimizes reflections.

An example layout is given in for the DPW (X2SON-5) package. This example layout includes a 0402 (metric) capacitor and uses the measurements found in the example board layout appended to this end of this datasheet. A via of diameter 0.1 mm (3.973 mil) is placed directly in the center of the device. This via can be used to trace out the center pin connection through another board layer, or it can be left out of the layout.

11.2 Layout Example

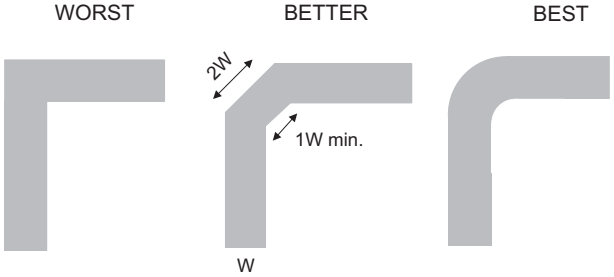

Figure 9. Trace Example

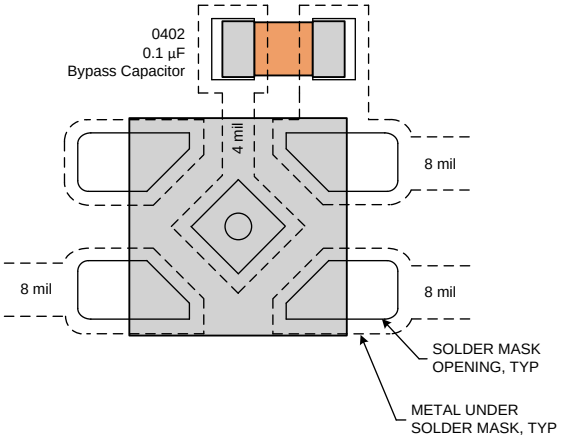

Figure 10. Example Layout With DPW (X2SON-5) Package

12 Device and Documentation Support

12.1 Documentation Support

12.1.1 Related Documentation

For related documentation see the following:

Implications of Slow of Floating CMOS Inputs application report

12.2 Receiving Notification of Documentation Updates

To receive notification of documentation updates, navigate to the device product folder on ti.com. In the upper right corner, click on *Alert me* to register and receive a weekly digest of any product information that has changed. For change details, review the revision history included in any revised document.

12.3 Community Resources

The following links connect to TI community resources. Linked contents are provided "AS IS" by the respective contributors. They do not constitute TI specifications and do not necessarily reflect TI's views; see TI's Terms of Use.

TI E2E™ Online Community ***TI's Engineer-to-Engineer (E2E) Community.*** Created to foster collaboration among engineers. At e2e.ti.com, you can ask questions, share knowledge, explore ideas and help solve problems with fellow engineers.

Design Support ***TI's Design Support*** Quickly find helpful E2E forums along with design support tools and contact information for technical support.

12.4 Trademarks

NanoStar, E2E are trademarks of Texas Instruments.
BluRay is a trademark of Blu-ray Disc Association (BDA).
All other trademarks are the property of their respective owners.

12.5 Electrostatic Discharge Caution

This integrated circuit can be damaged by ESD. Texas Instruments recommends that all integrated circuits be handled with appropriate precautions. Failure to observe proper handling and installation procedures can cause damage.

ESD damage can range from subtle performance degradation to complete device failure. Precision integrated circuits may be more susceptible to damage because very small parametric changes could cause the device not to meet its published specifications.

12.6 Glossary

SLYZ022 — *TI Glossary*.

This glossary lists and explains terms, acronyms, and definitions.

13 Mechanical, Packaging, and Orderable Information

The following pages include mechanical, packaging, and orderable information. This information is the most current data available for the designated devices. This data is subject to change without notice and revision of this document. For browser-based versions of this data sheet, refer to the left-hand navigation.

Copyright © 2004–2017, Texas Instruments Incorporated

PACKAGING INFORMATION

Orderable Device	Status (1)	Package Type	Package Drawing	Pins	Package Qty	Eco Plan (2)	Lead finish/ Ball material (6)	MSL Peak Temp (3)	Op Temp (°C)	Device Marking (4/5)	Samples
74AUP1G126DRLRG4	ACTIVE	SOT-5X3	DRL	5	4000	RoHS & Green	NIPDAUAG	Level-1-260C-UNLIM	-40 to 85	(HN7, HNR)	Samples
SN74AUP1G126DBVR	ACTIVE	SOT-23	DBV	5	3000	RoHS & Green	NIPDAU	Level-1-260C-UNLIM	-40 to 85	H26R	Samples
SN74AUP1G126DBVT	ACTIVE	SOT-23	DBV	5	250	RoHS & Green	NIPDAU	Level-1-260C-UNLIM	-40 to 85	H26R	Samples
SN74AUP1G126DCKR	ACTIVE	SC70	DCK	5	3000	RoHS & Green	NIPDAU	Level-1-260C-UNLIM	-40 to 85	(HN5, HNF, HNK, HN R)	Samples
SN74AUP1G126DCKT	ACTIVE	SC70	DCK	5	250	RoHS & Green	NIPDAU	Level-1-260C-UNLIM	-40 to 85	(HN5, HNR)	Samples
SN74AUP1G126DPWR	ACTIVE	X2SON	DPW	5	3000	RoHS & Green	NIPDAU	Level-1-260C-UNLIM	-40 to 85	C4	Samples
SN74AUP1G126DRLR	ACTIVE	SOT-5X3	DRL	5	4000	RoHS & Green	NIPDAU | NIPDAUAG	Level-1-260C-UNLIM	-40 to 85	(HN7, HNR)	Samples
SN74AUP1G126DRYR	ACTIVE	SON	DRY	6	5000	RoHS & Green	NIPDAU | NIPDAUAG	Level-1-260C-UNLIM	-40 to 85	HN	Samples
SN74AUP1G126DSFR	ACTIVE	SON	DSF	6	5000	RoHS & Green	NIPDAU | NIPDAUAG	Level-1-260C-UNLIM	-40 to 85	HN	Samples
SN74AUP1G126YFPR	ACTIVE	DSBGA	YFP	6	3000	RoHS & Green	SNAGCU	Level-1-260C-UNLIM		HNN	Samples
SN74AUP1G126YZPR	ACTIVE	DSBGA	YZP	5	3000	RoHS & Green	SNAGCU	Level-1-260C-UNLIM	-40 to 85	HNN	Samples

(1) The marketing status values are defined as follows:
ACTIVE: Product device recommended for new designs.
LIFEBUY: TI has announced that the device will be discontinued, and a lifetime-buy period is in effect.
NRND: Not recommended for new designs. Device is in production to support existing customers, but TI does not recommend using this part in a new design.
PREVIEW: Device has been announced but is not in production. Samples may or may not be available.
OBSOLETE: TI has discontinued the production of the device.

(2) **RoHS:** TI defines "RoHS" to mean semiconductor products that are compliant with the current EU RoHS requirements for all 10 RoHS substances, including the requirement that RoHS substance do not exceed 0.1% by weight in homogeneous materials. Where designed to be soldered at high temperatures, "RoHS" products are suitable for use in specified lead-free processes. TI may reference these types of products as "Pb-Free".
RoHS Exempt: TI defines "RoHS Exempt" to mean products that contain lead but are compliant with EU RoHS pursuant to a specific EU RoHS exemption.
Green: TI defines "Green" to mean the content of Chlorine (Cl) and Bromine (Br) based flame retardants meet JS709B low halogen requirements of <=1000ppm threshold. Antimony trioxide based flame retardants must also meet the <=1000ppm threshold requirement.

(3) MSL, Peak Temp. - The Moisture Sensitivity Level rating according to the JEDEC industry standard classifications, and peak solder temperature.

(4) There may be additional marking, which relates to the logo, the lot trace code information, or the environmental category on the device.

(5) Multiple Device Markings will be inside parentheses. Only one Device Marking contained in parentheses and separated by a "~" will appear on a device. If a line is indented then it is a continuation of the previous line and the two combined represent the entire Device Marking for that device.

(6) Lead finish/Ball material - Orderable Devices may have multiple material finish options. Finish options are separated by a vertical ruled line. Lead finish/Ball material values may wrap to two lines if the finish value exceeds the maximum column width.

Important Information and Disclaimer: The information provided on this page represents TI's knowledge and belief as of the date that it is provided. TI bases its knowledge and belief on information provided by third parties, and makes no representation or warranty as to the accuracy of such information. Efforts are underway to better integrate information from third parties. TI has taken and continues to take reasonable steps to provide representative and accurate information but may not have conducted destructive testing or chemical analysis on incoming materials and chemicals. TI and TI suppliers consider certain information to be proprietary, and thus CAS numbers and other limited information may not be available for release.

In no event shall TI's liability arising out of such information exceed the total purchase price of the TI part(s) at issue in this document sold by TI to Customer on an annual basis.

TAPE AND REEL INFORMATION

REEL DIMENSIONS

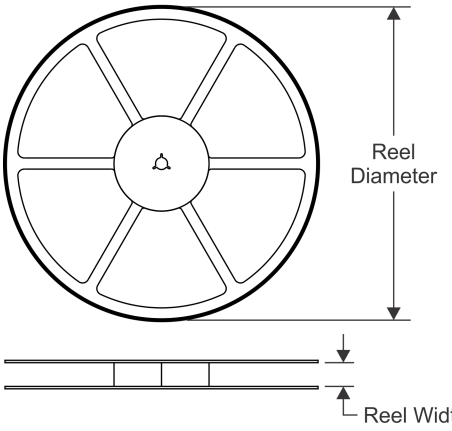

TAPE DIMENSIONS

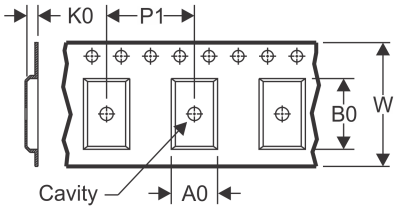

A0	Dimension designed to accommodate the component width
B0	Dimension designed to accommodate the component length
K0	Dimension designed to accommodate the component thickness
W	Overall width of the carrier tape
P1	Pitch between successive cavity centers

QUADRANT ASSIGNMENTS FOR PIN 1 ORIENTATION IN TAPE

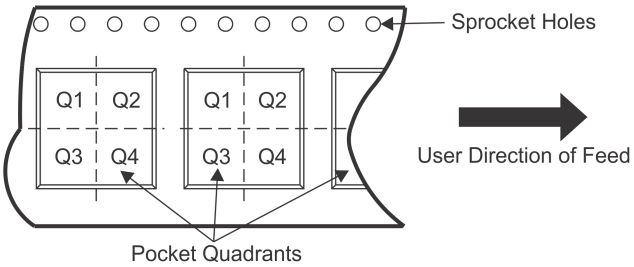

*All dimensions are nominal

Device	Package Type	Package Drawing	Pins	SPQ	Reel Diameter (mm)	Reel Width W1 (mm)	A0 (mm)	B0 (mm)	K0 (mm)	P1 (mm)	W (mm)	Pin1 Quadrant
SN74AUP1G126DBVR	SOT-23	DBV	5	3000	180.0	8.4	3.23	3.17	1.37	4.0	8.0	Q3
SN74AUP1G126DBVT	SOT-23	DBV	5	250	180.0	8.4	3.23	3.17	1.37	4.0	8.0	Q3
SN74AUP1G126DCKR	SC70	DCK	5	3000	180.0	8.4	2.47	2.3	1.25	4.0	8.0	Q3
SN74AUP1G126DCKR	SC70	DCK	5	3000	178.0	9.2	2.4	2.4	1.22	4.0	8.0	Q3
SN74AUP1G126DCKT	SC70	DCK	5	250	178.0	9.2	2.4	2.4	1.22	4.0	8.0	Q3
SN74AUP1G126DCKT	SC70	DCK	5	250	180.0	8.4	2.47	2.3	1.25	4.0	8.0	Q3
SN74AUP1G126DPWR	X2SON	DPW	5	3000	178.0	8.4	0.91	0.91	0.5	2.0	8.0	Q3
SN74AUP1G126DRLR	SOT-5X3	DRL	5	4000	180.0	8.4	1.98	1.78	0.69	4.0	8.0	Q3
SN74AUP1G126DRLR	SOT-5X3	DRL	5	4000	180.0	9.5	1.78	1.78	0.69	4.0	8.0	Q3
SN74AUP1G126DRYR	SON	DRY	6	5000	180.0	9.5	1.15	1.6	0.75	4.0	8.0	Q1
SN74AUP1G126DRYR	SON	DRY	6	5000	180.0	8.4	1.25	1.6	0.7	4.0	8.0	Q1
SN74AUP1G126DSFR	SON	DSF	6	5000	180.0	9.5	1.16	1.16	0.5	4.0	8.0	Q2
SN74AUP1G126YFPR	DSBGA	YFP	6	3000	178.0	9.2	0.89	1.29	0.62	4.0	8.0	Q1
SN74AUP1G126YZPR	DSBGA	YZP	5	3000	178.0	9.2	1.02	1.52	0.63	4.0	8.0	Q1

TAPE AND REEL BOX DIMENSIONS

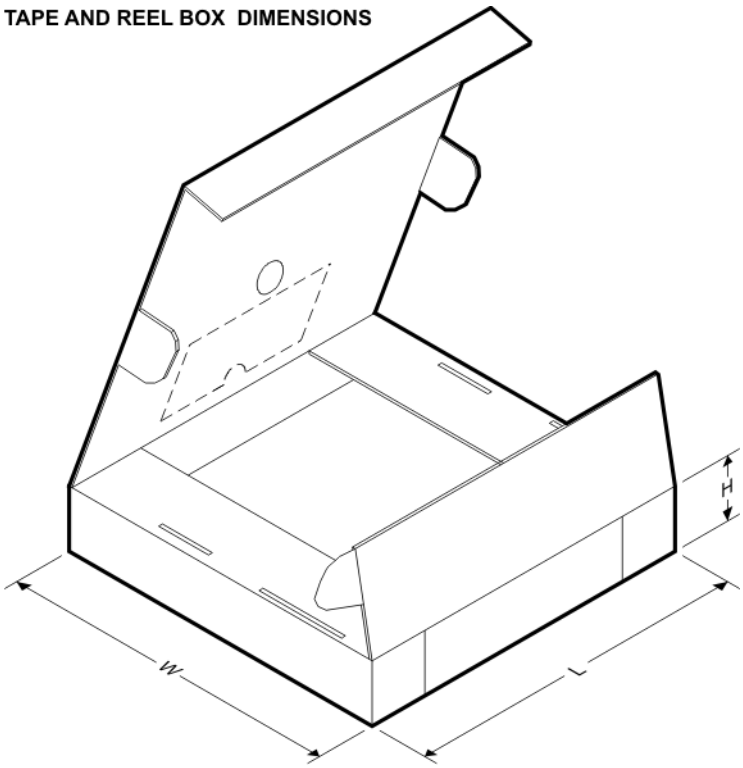

*All dimensions are nominal

Device	Package Type	Package Drawing	Pins	SPQ	Length (mm)	Width (mm)	Height (mm)
SN74AUP1G126DBVR	SOT-23	DBV	5	3000	202.0	201.0	28.0
SN74AUP1G126DBVT	SOT-23	DBV	5	250	202.0	201.0	28.0
SN74AUP1G126DCKR	SC70	DCK	5	3000	202.0	201.0	28.0
SN74AUP1G126DCKR	SC70	DCK	5	3000	180.0	180.0	18.0
SN74AUP1G126DCKT	SC70	DCK	5	250	180.0	180.0	18.0
SN74AUP1G126DCKT	SC70	DCK	5	250	202.0	201.0	28.0
SN74AUP1G126DPWR	X2SON	DPW	5	3000	205.0	200.0	33.0
SN74AUP1G126DRLR	SOT-5X3	DRL	5	4000	202.0	201.0	28.0
SN74AUP1G126DRLR	SOT-5X3	DRL	5	4000	184.0	184.0	19.0
SN74AUP1G126DRYR	SON	DRY	6	5000	184.0	184.0	19.0
SN74AUP1G126DRYR	SON	DRY	6	5000	202.0	201.0	28.0
SN74AUP1G126DSFR	SON	DSF	6	5000	184.0	184.0	19.0
SN74AUP1G126YFPR	DSBGA	YFP	6	3000	220.0	220.0	35.0
SN74AUP1G126YZPR	DSBGA	YZP	5	3000	220.0	220.0	35.0

DCK (R–PDSO–G5) PLASTIC SMALL–OUTLINE PACKAGE

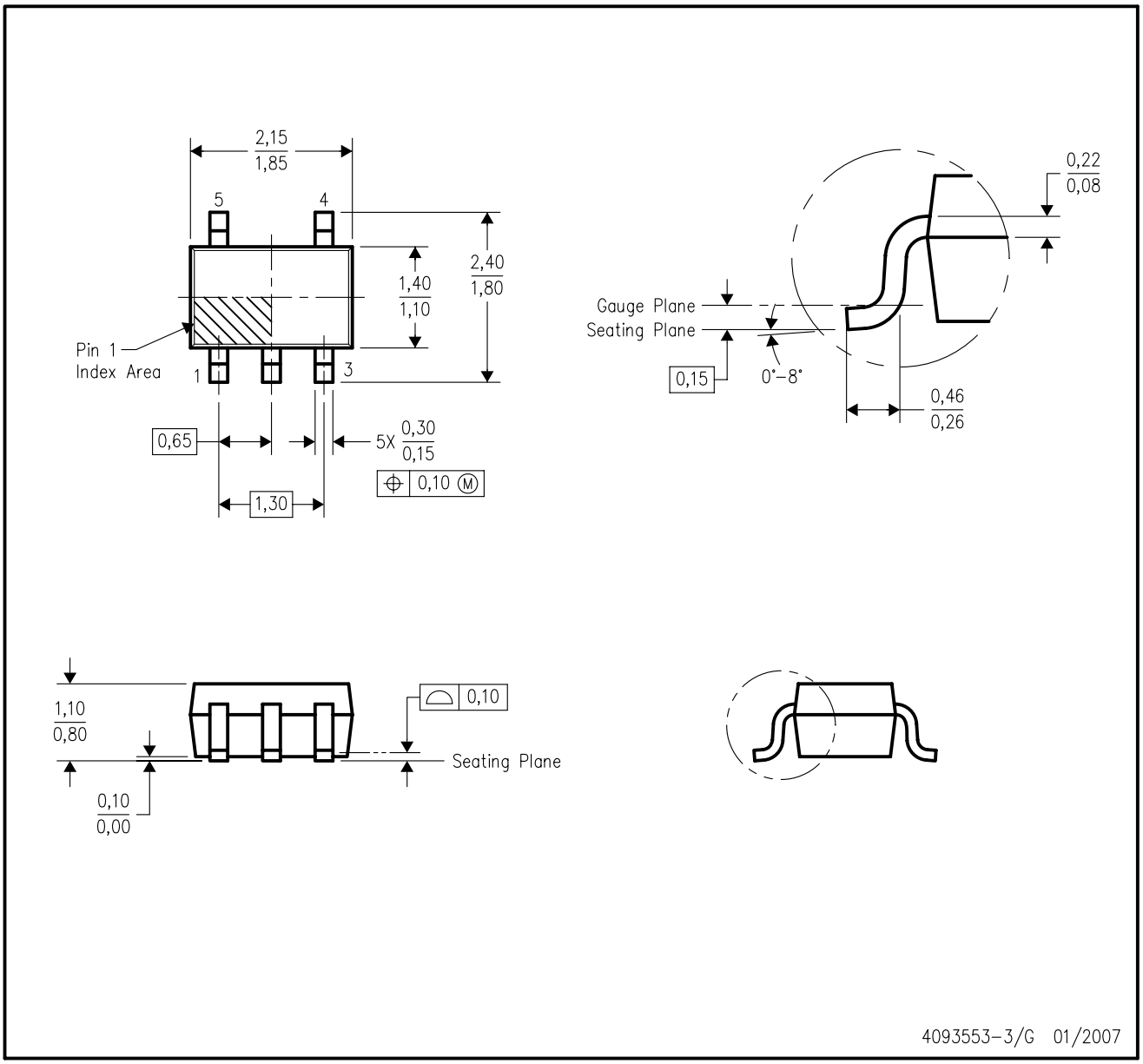

NOTES:
A. All linear dimensions are in millimeters.
B. This drawing is subject to change without notice.
C. Body dimensions do not include mold flash or protrusion. Mold flash and protrusion shall not exceed 0.15 per side.
D. Falls within JEDEC MO–203 variation AA.

DCK (R-PDSO-G5) PLASTIC SMALL OUTLINE

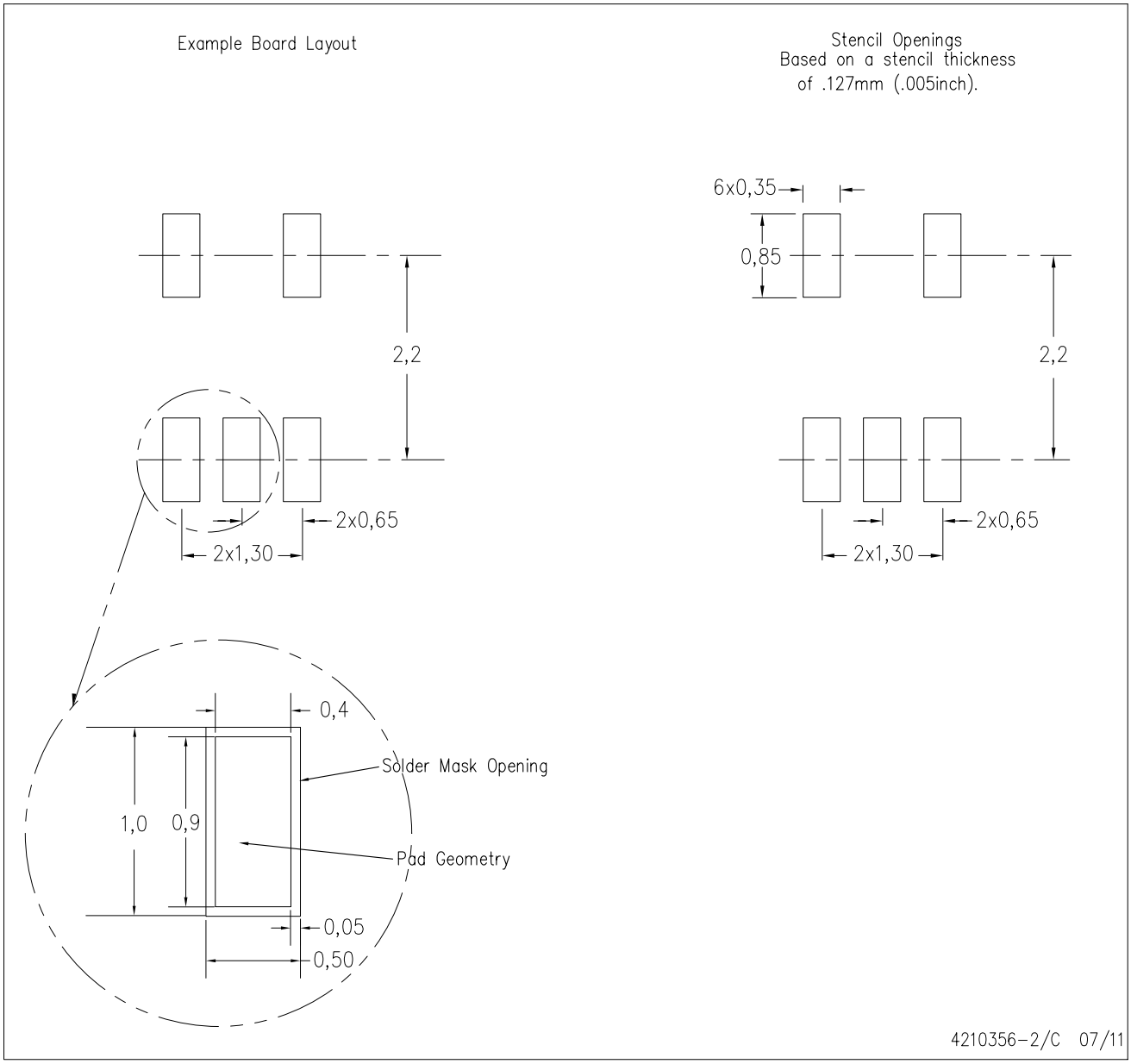

NOTES:
A. All linear dimensions are in millimeters.
B. This drawing is subject to change without notice.
C. Customers should place a note on the circuit board fabrication drawing not to alter the center solder mask defined pad.
D. Publication IPC-7351 is recommended for alternate designs.
E. Laser cutting apertures with trapezoidal walls and also rounding corners will offer better paste release. Customers should contact their board assembly site for stencil design recommendations. Example stencil design based on a 50% volumetric metal load solder paste. Refer to IPC-7525 for other stencil recommendations.

Images above are just a representation of the package family, actual package may vary.
Refer to the product data sheet for package details.

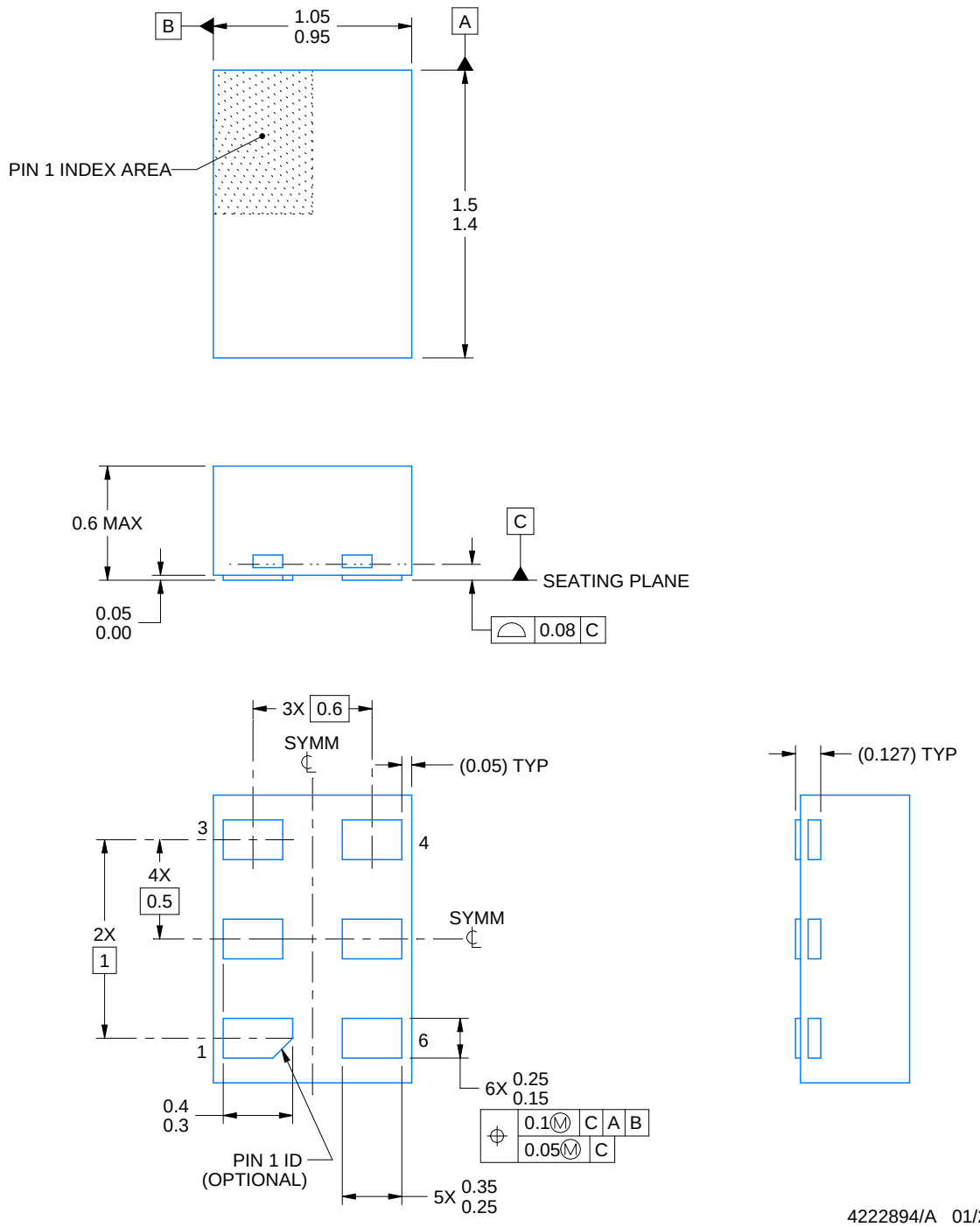

NOTES:

1. All linear dimensions are in millimeters. Any dimensions in parenthesis are for reference only. Dimensioning and tolerancing per ASME Y14.5M.
2. This drawing is subject to change without notice.

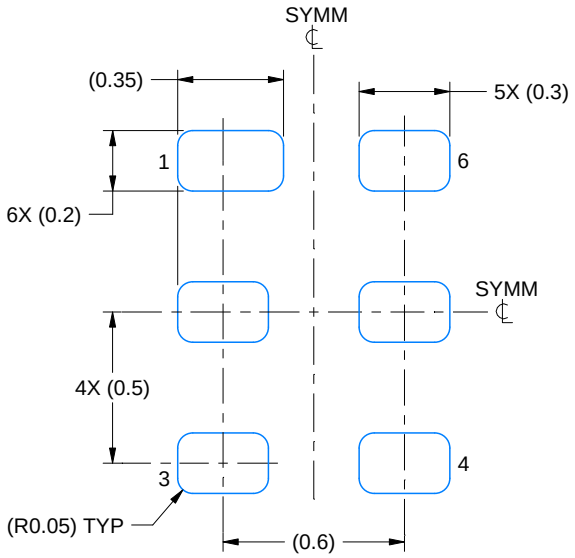

LAND PATTERN EXAMPLE
1:1 RATIO WITH PKG SOLDER PADS
EXPOSED METAL SHOWN
SCALE:40X

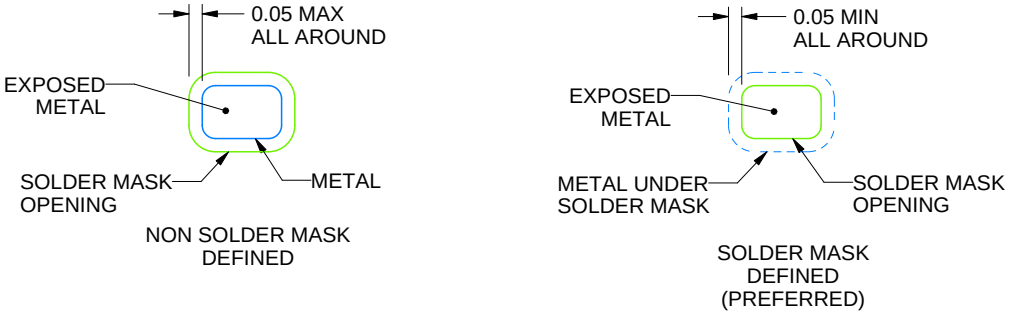

SOLDER MASK DETAILS

4222894/A 01/2018

NOTES: (continued)

3. For more information, see QFN/SON PCB application report in literature No. SLUA271 (www.ti.com/lit/slua271).

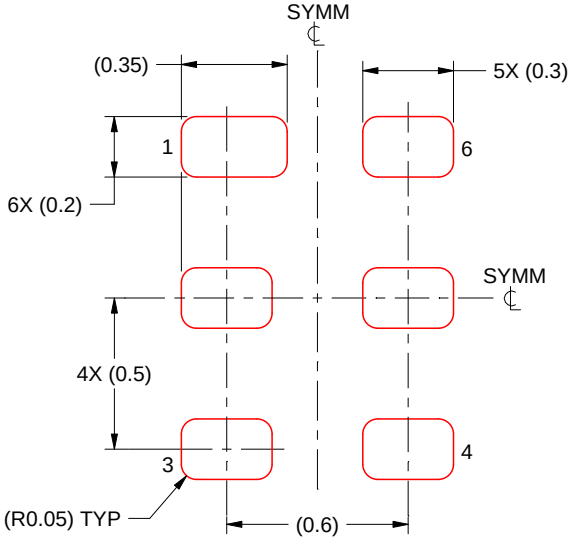

SOLDER PASTE EXAMPLE
BASED ON 0.075 - 0.1 mm THICK STENCIL
SCALE:40X

4222894/A 01/2018

NOTES: (continued)

4. Laser cutting apertures with trapezoidal walls and rounded corners may offer better paste release. IPC-7525 may have alternate design recommendations.

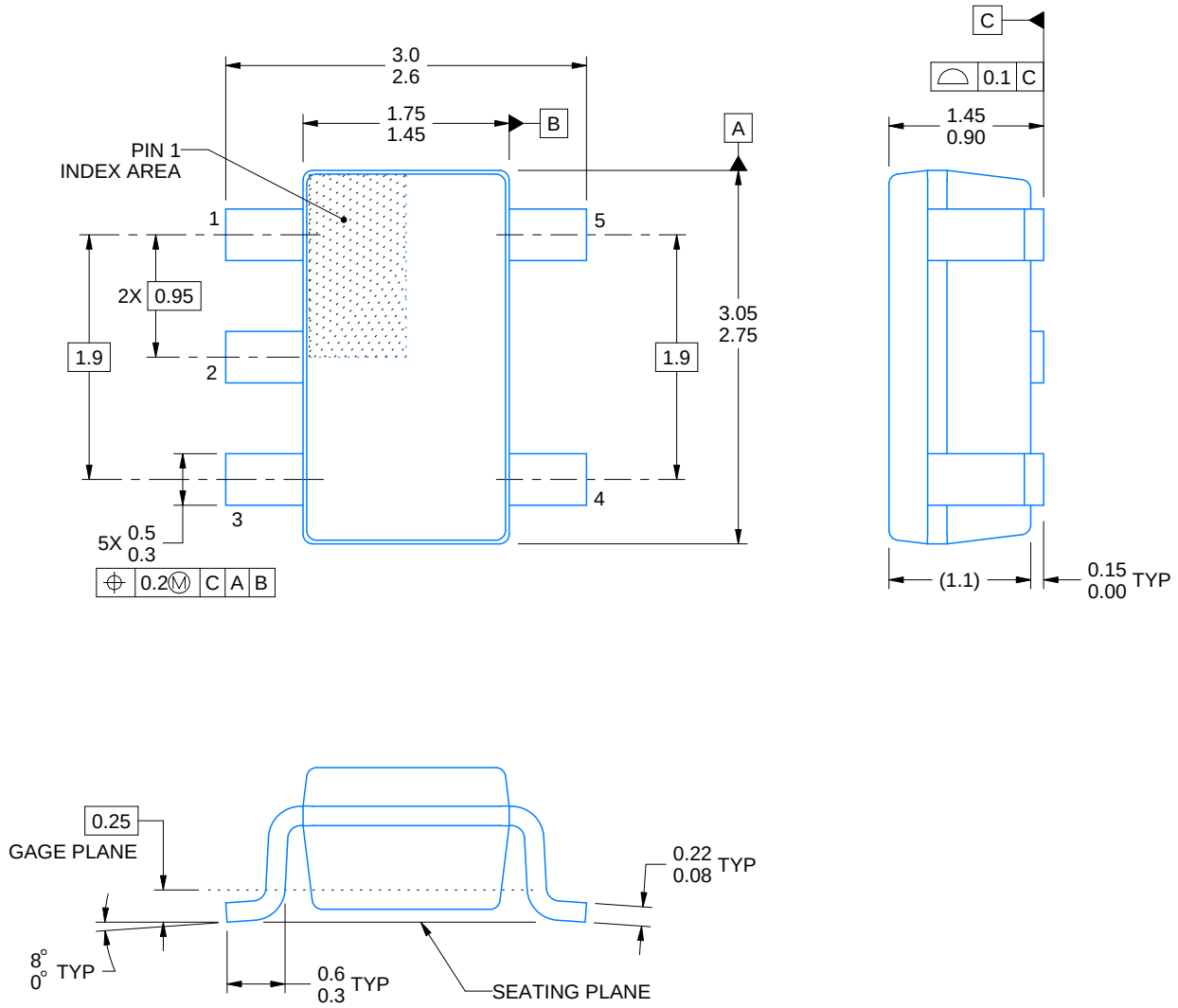

4214839/F 06/2021

NOTES:

1. All linear dimensions are in millimeters. Any dimensions in parenthesis are for reference only. Dimensioning and tolerancing per ASME Y14.5M.
2. This drawing is subject to change without notice.
3. Refernce JEDEC MO-178.
4. Body dimensions do not include mold flash, protrusions, or gate burrs. Mold flash, protrusions, or gate burrs shall not exceed 0.25 mm per side.

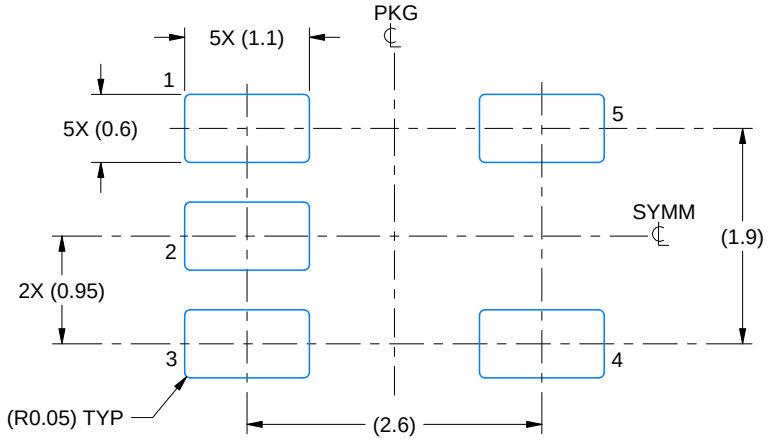

LAND PATTERN EXAMPLE
EXPOSED METAL SHOWN
SCALE:15X

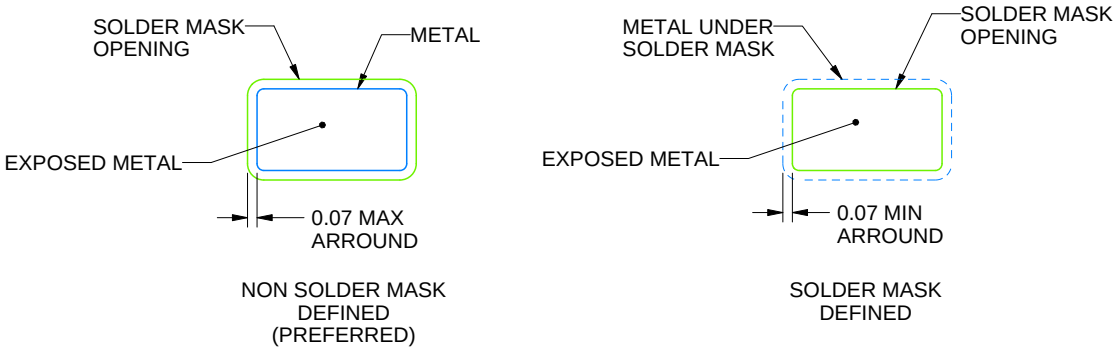

SOLDER MASK DETAILS

4214839/F 06/2021

NOTES: (continued)

5. Publication IPC-7351 may have alternate designs.
6. Solder mask tolerances between and around signal pads can vary based on board fabrication site.

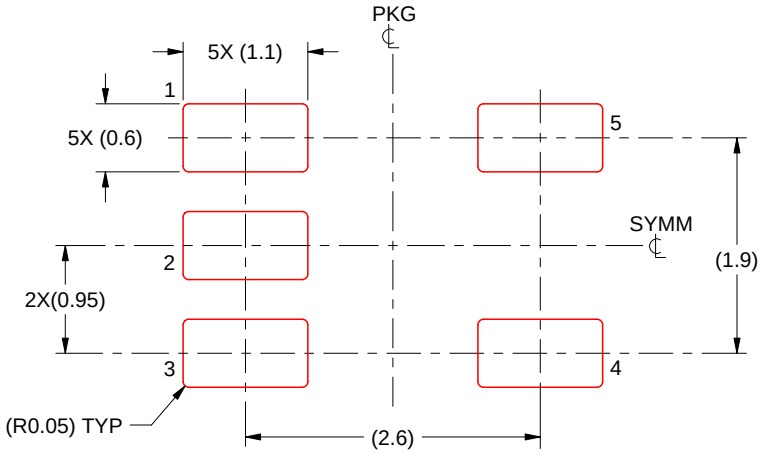

SOLDER PASTE EXAMPLE
BASED ON 0.125 mm THICK STENCIL
SCALE:15X

4214839/F 06/2021

NOTES: (continued)

7. Laser cutting apertures with trapezoidal walls and rounded corners may offer better paste release. IPC-7525 may have alternate design recommendations.
8. Board assembly site may have different recommendations for stencil design.

DPW 5 X2SON - 0.4 mm max height

PLASTIC SMALL OUTLINE - NO LEAD

Images above are just a representation of the package family, actual package may vary.
Refer to the product data sheet for package details.

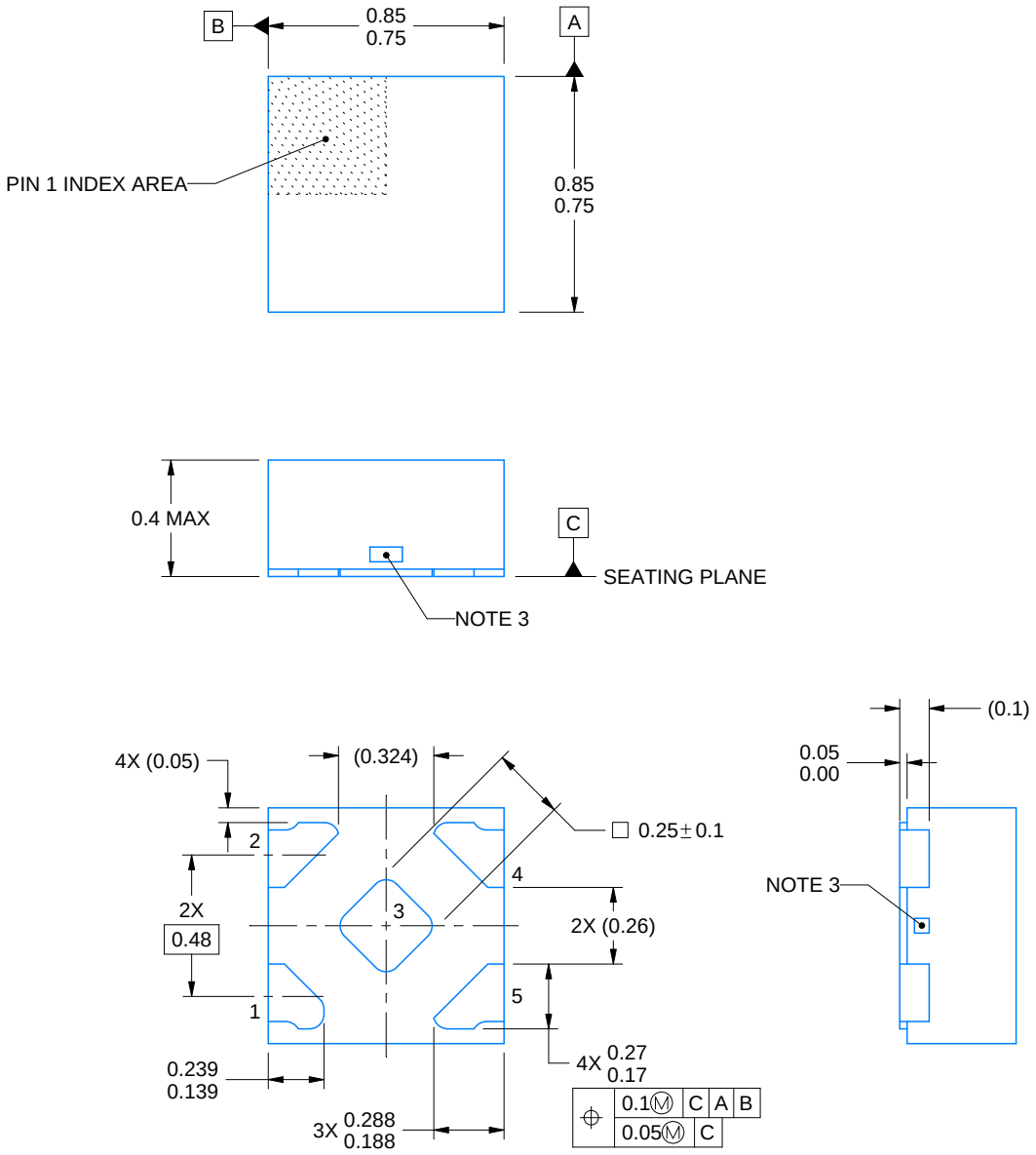

4223102/D 03/2022

NOTES:

1. All linear dimensions are in millimeters. Any dimensions in parenthesis are for reference only. Dimensioning and tolerancing per ASME Y14.5M.
2. This drawing is subject to change without notice.
3. The size and shape of this feature may vary.

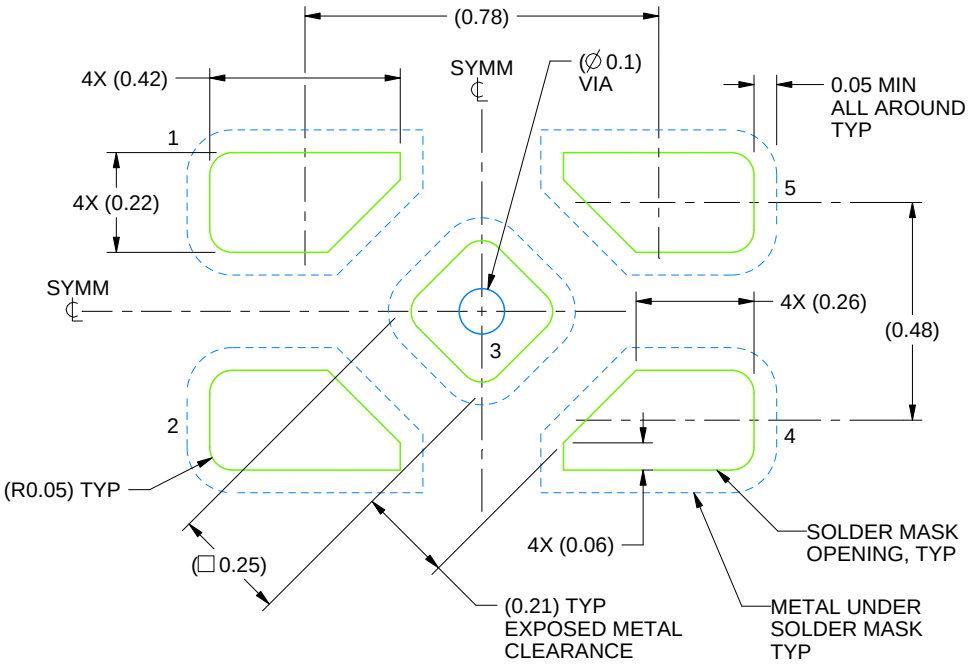

LAND PATTERN EXAMPLE
SOLDER MASK DEFINED
SCALE:60X

4223102/D 03/2022

NOTES: (continued)

4. This package is designed to be soldered to a thermal pad on the board. For more information, refer to QFN/SON PCB application note in literature No. SLUA271 (www.ti.com/lit/slua271).

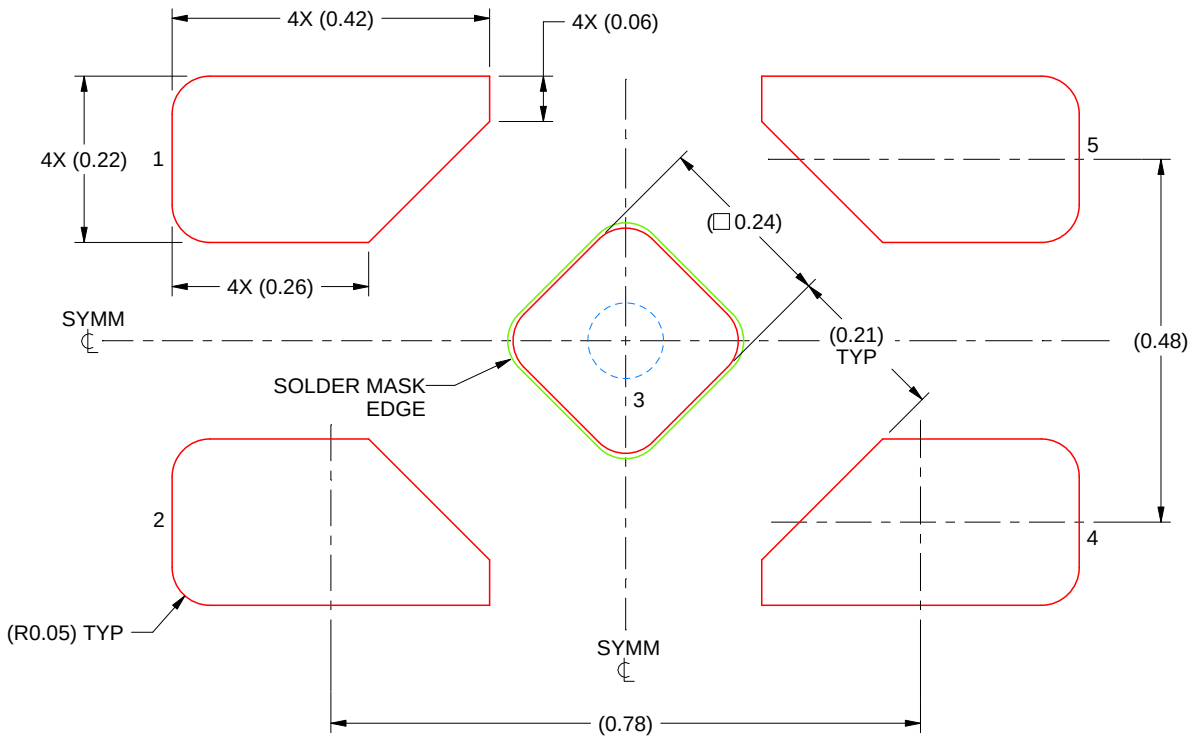

SOLDER PASTE EXAMPLE
BASED ON 0.1 mm THICK STENCIL

EXPOSED PAD 3
92% PRINTED SOLDER COVERAGE BY AREA UNDER PACKAGE
SCALE:100X

4223102/D 03/2022

NOTES: (continued)

5. Laser cutting apertures with trapezoidal walls and rounded corners may offer better paste release. IPC-7525 may have alternate design recommendations.

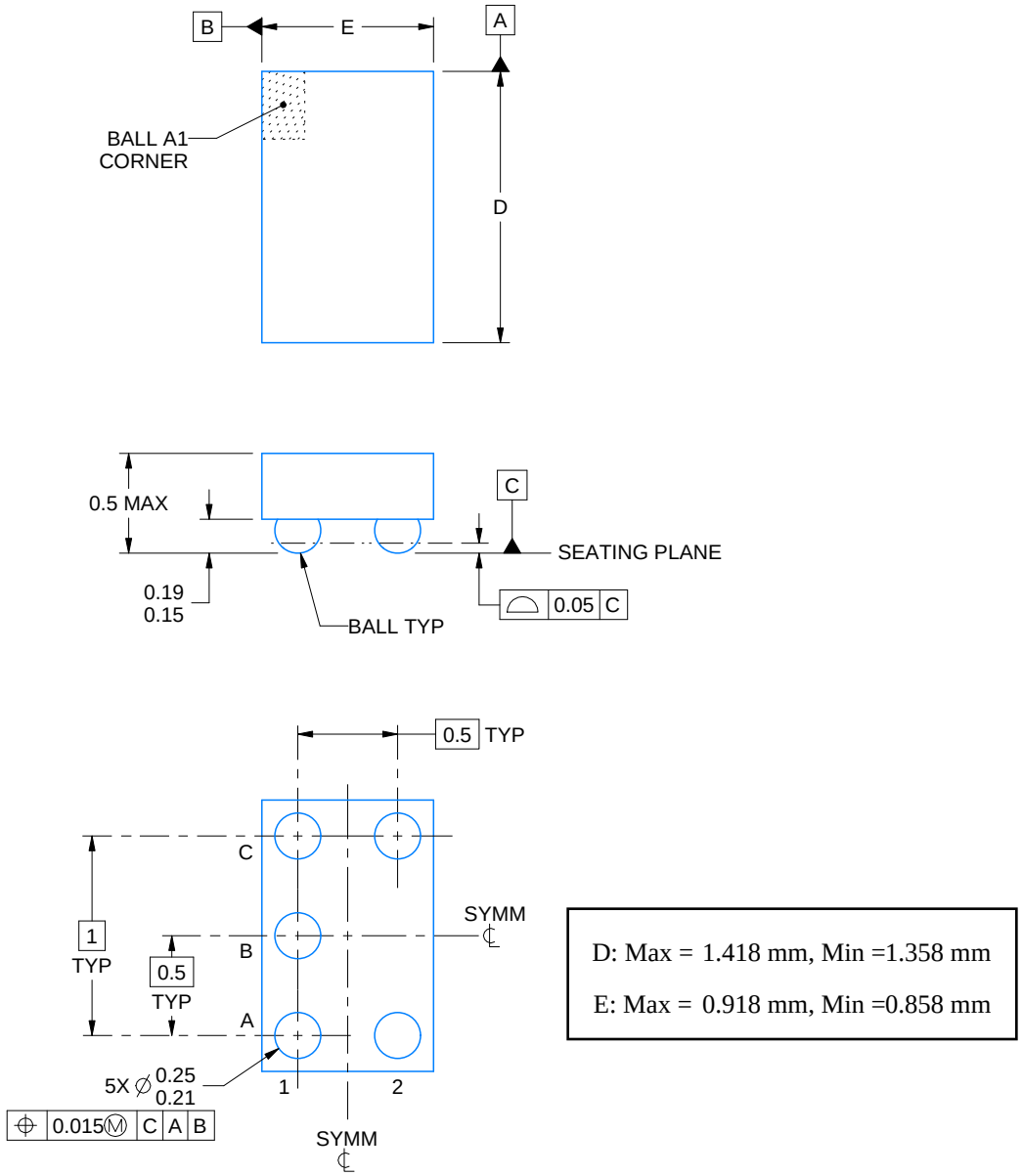

NOTES:

1. All linear dimensions are in millimeters. Any dimensions in parenthesis are for reference only. Dimensioning and tolerancing per ASME Y14.5M.
2. This drawing is subject to change without notice.

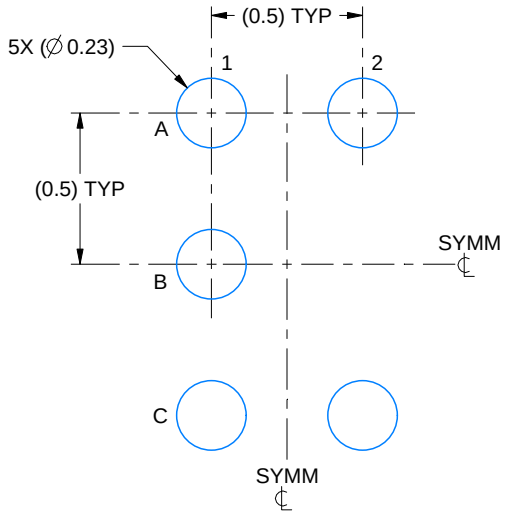

LAND PATTERN EXAMPLE
SCALE:40X

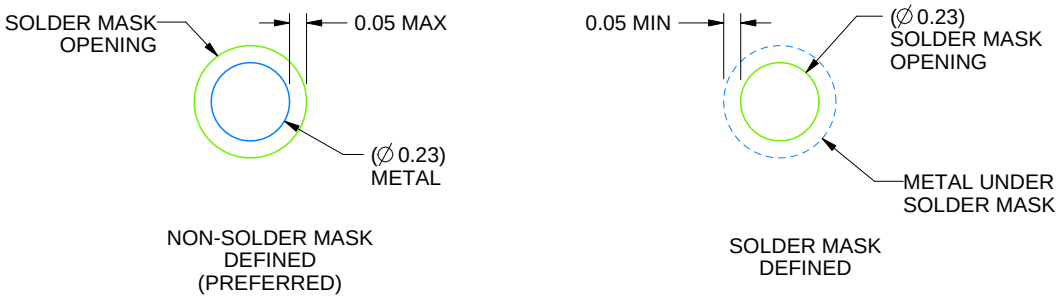

SOLDER MASK DETAILS
NOT TO SCALE

4219492/A 05/2017

NOTES: (continued)

3. Final dimensions may vary due to manufacturing tolerance considerations and also routing constraints. For more information, see Texas Instruments literature number SNVA009 (www.ti.com/lit/snva009).

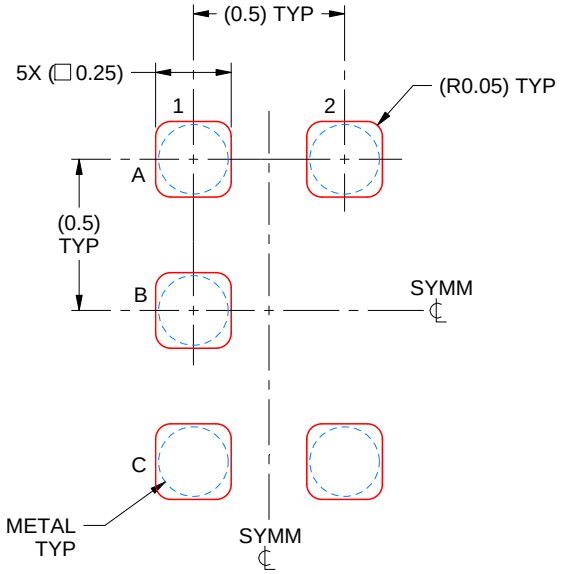

SOLDER PASTE EXAMPLE
BASED ON 0.1 mm THICK STENCIL
SCALE:40X

4219492/A 05/2017

NOTES: (continued)

4. Laser cutting apertures with trapezoidal walls and rounded corners may offer better paste release.

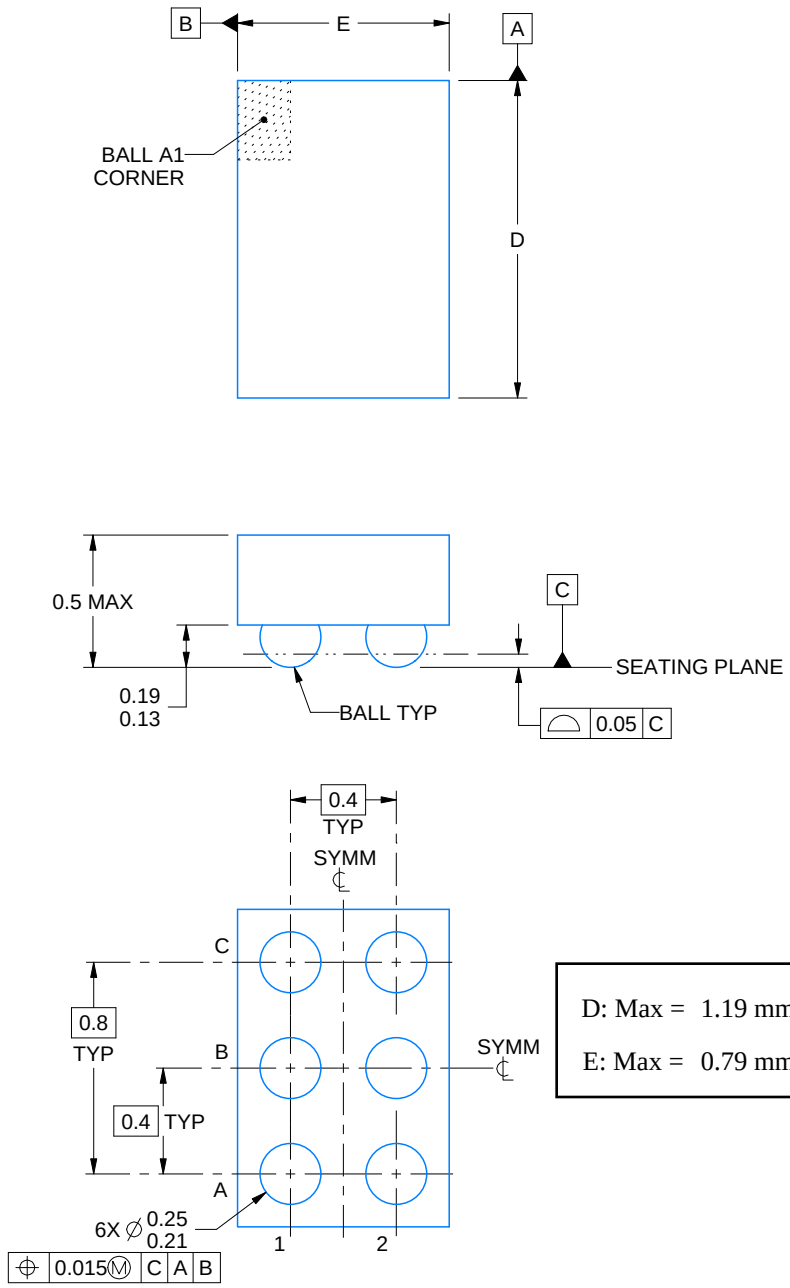

D: Max = 1.19 mm, Min = 1.13 mm

E: Max = 0.79 mm, Min = 0.73 mm

4223410/A 11/2016

NOTES:

1. All linear dimensions are in millimeters. Any dimensions in parenthesis are for reference only. Dimensioning and tolerancing per ASME Y14.5M.
2. This drawing is subject to change without notice.

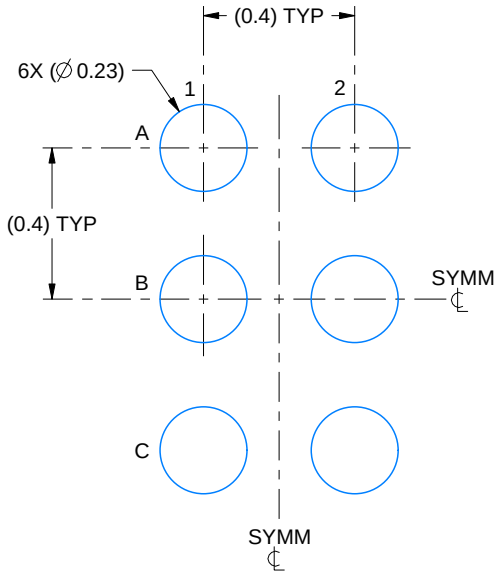

LAND PATTERN EXAMPLE
SCALE:50X

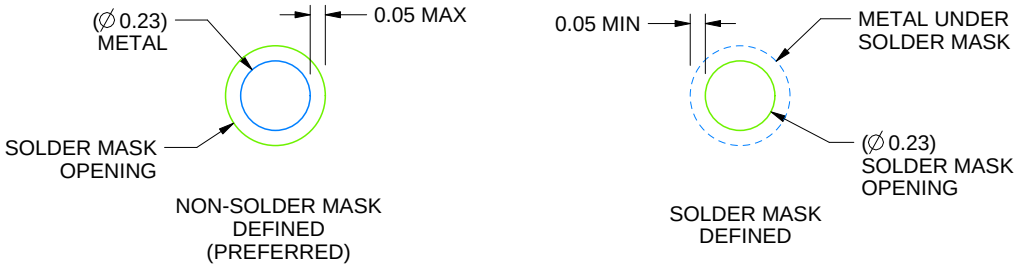

SOLDER MASK DETAILS
NOT TO SCALE

4223410/A 11/2016

NOTES: (continued)

3. Final dimensions may vary due to manufacturing tolerance considerations and also routing constraints.
   For more information, see Texas Instruments literature number SNVA009 (www.ti.com/lit/snva009).

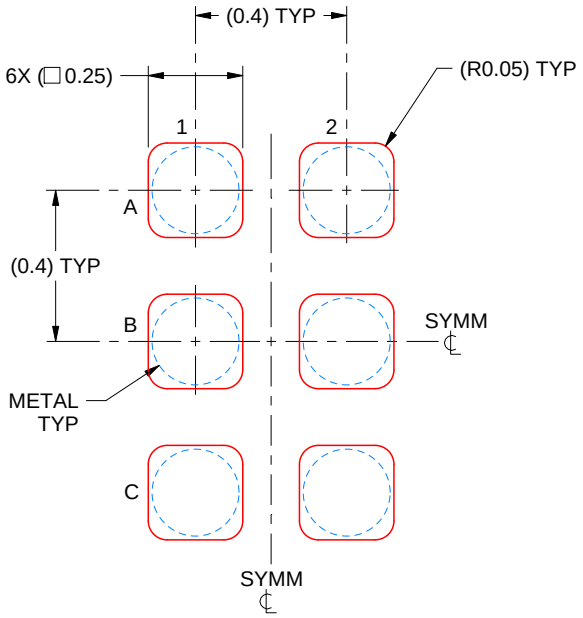

SOLDER PASTE EXAMPLE
BASED ON 0.1 mm THICK STENCIL
SCALE:50X

4223410/A 11/2016

NOTES: (continued)

4. Laser cutting apertures with trapezoidal walls and rounded corners may offer better paste release.

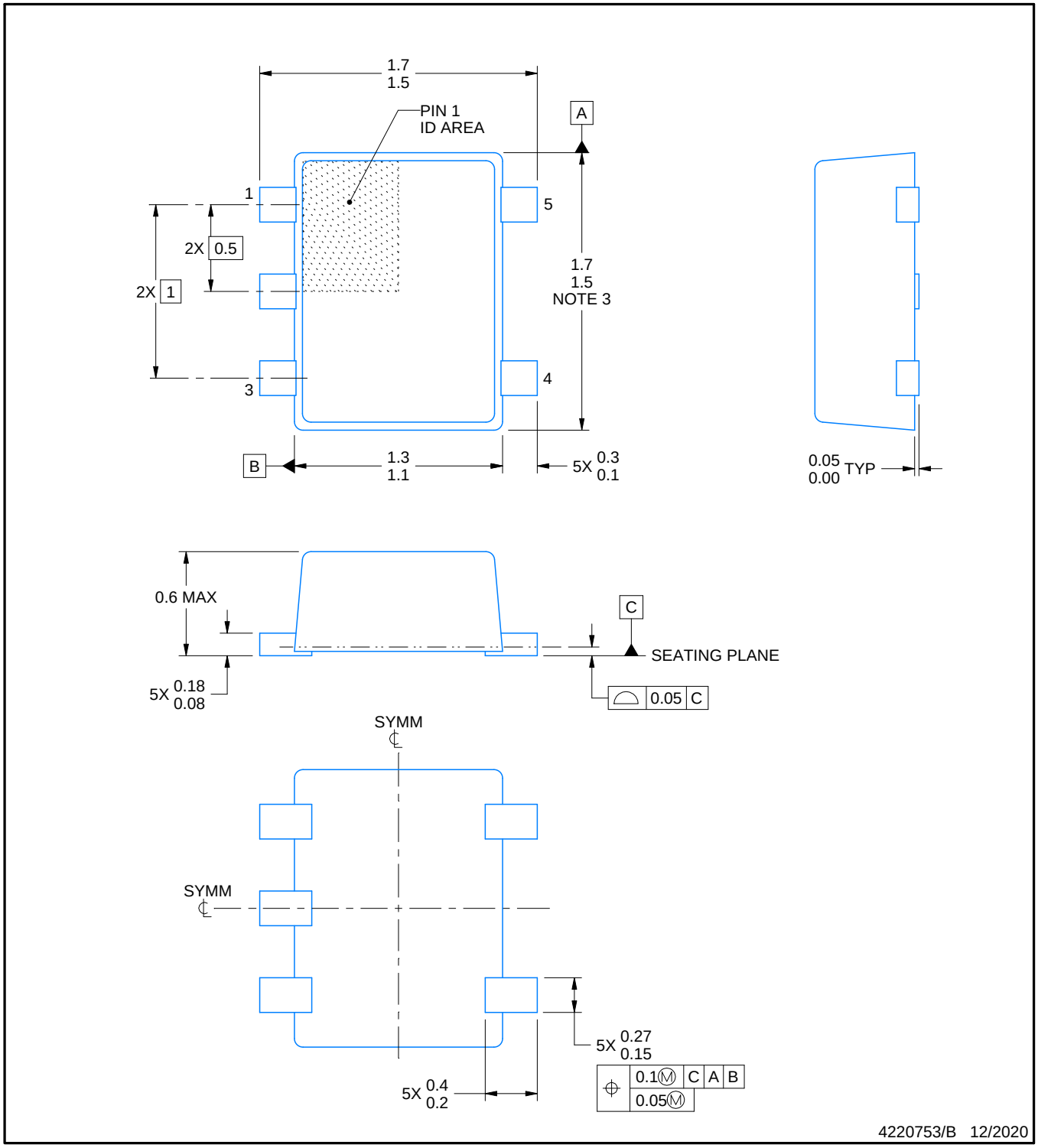

NOTES:

1. All linear dimensions are in millimeters. Any dimensions in parenthesis are for reference only. Dimensioning and tolerancing per ASME Y14.5M.
2. This drawing is subject to change without notice.
3. This dimension does not include mold flash, protrusions, or gate burrs. Mold flash, protrusions, or gate burrs shall not exceed 0.15 mm per side.
4. Reference JEDEC registration MO-293 Variation UAAD-1

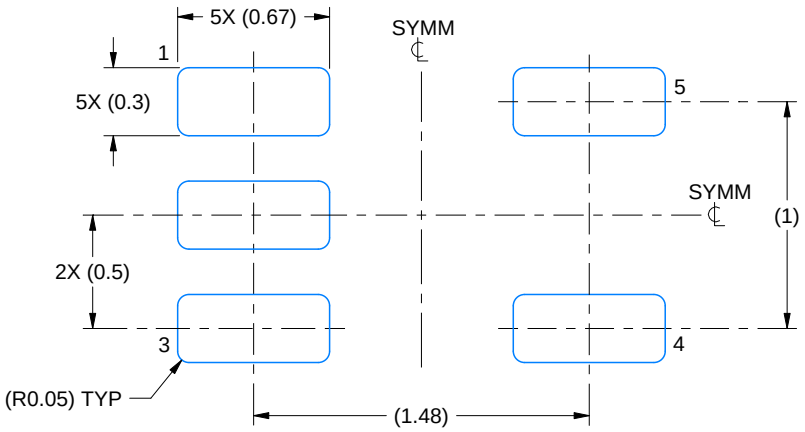

LAND PATTERN EXAMPLE
SCALE:30X

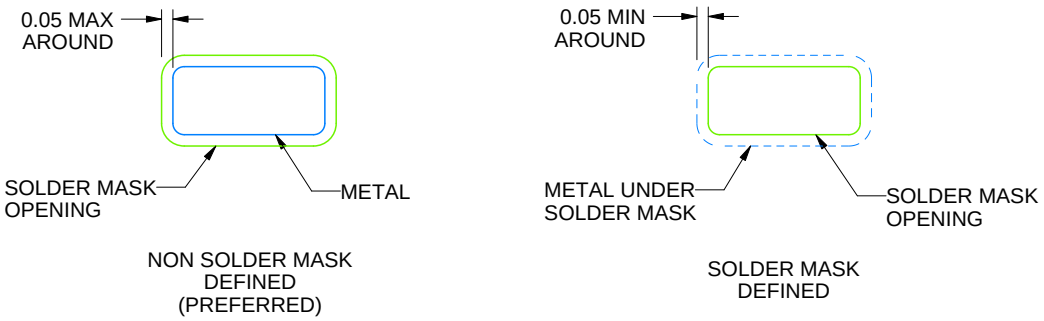

SOLDERMASK DETAILS

4220753/B 12/2020

NOTES: (continued)

5. Publication IPC-7351 may have alternate designs.
6. Solder mask tolerances between and around signal pads can vary based on board fabrication site.

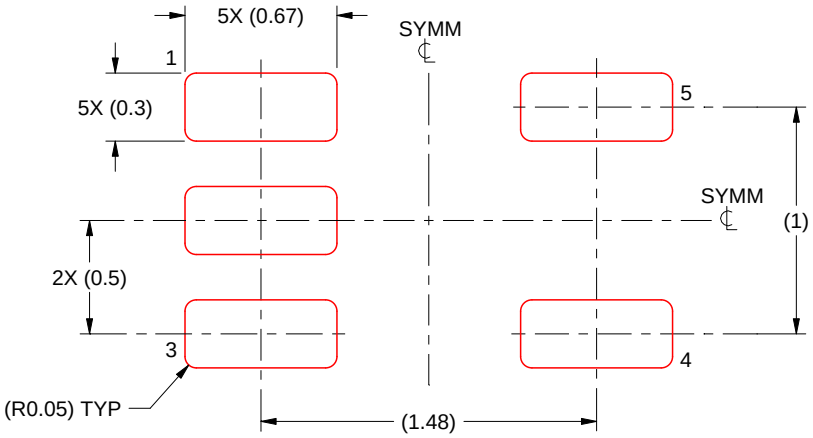

SOLDER PASTE EXAMPLE
BASED ON 0.1 mm THICK STENCIL
SCALE:30X

4220753/B 12/2020

NOTES: (continued)

7. Laser cutting apertures with trapezoidal walls and rounded corners may offer better paste release. IPC-7525 may have alternate design recommendations.
8. Board assembly site may have different recommendations for stencil design.

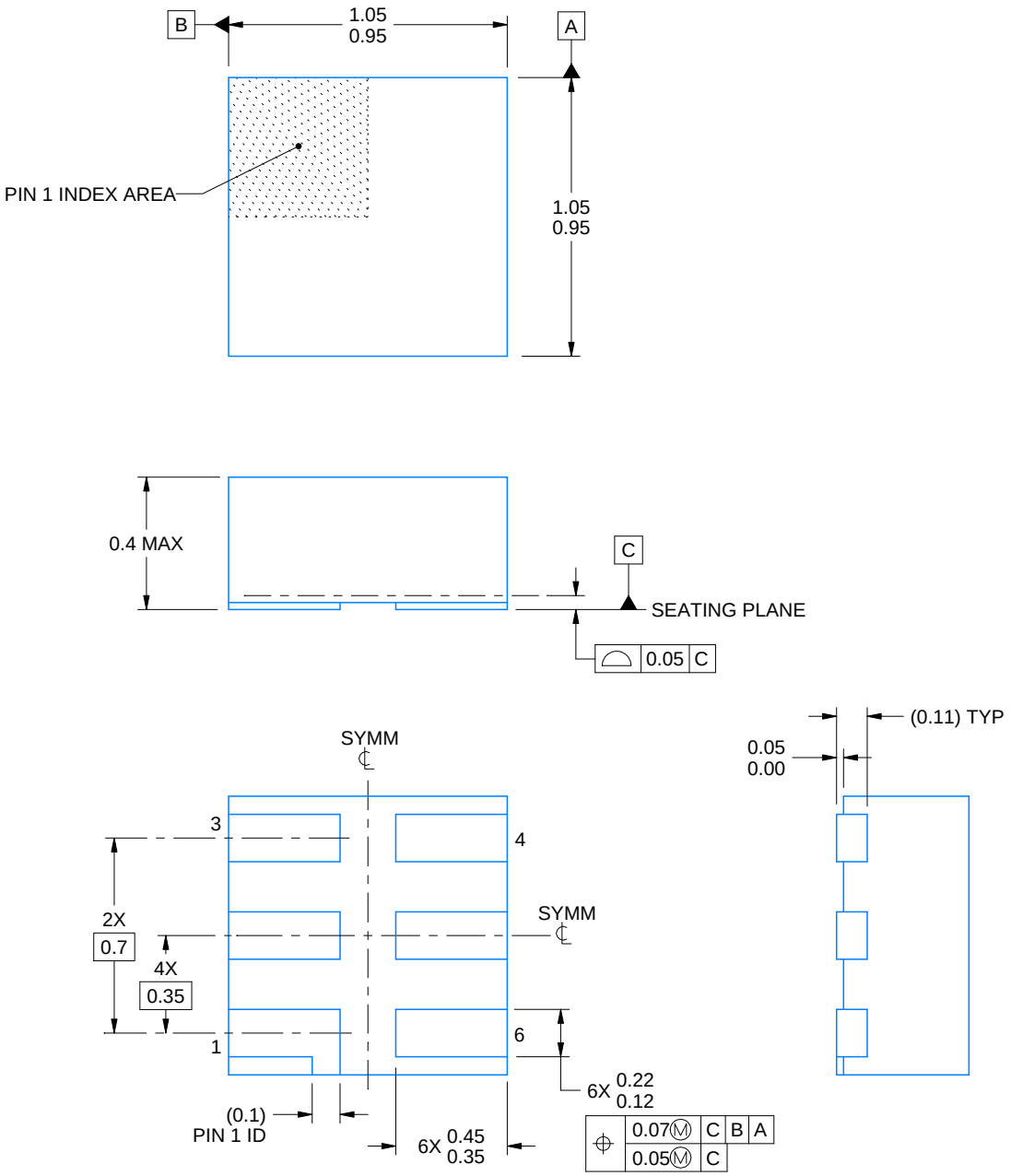

4220597/A 06/2017

NOTES:

1. All linear dimensions are in millimeters. Any dimensions in parenthesis are for reference only. Dimensioning and tolerancing per ASME Y14.5M.
2. This drawing is subject to change without notice.
3. Reference JEDEC registration MO-287, variation X2AAF.

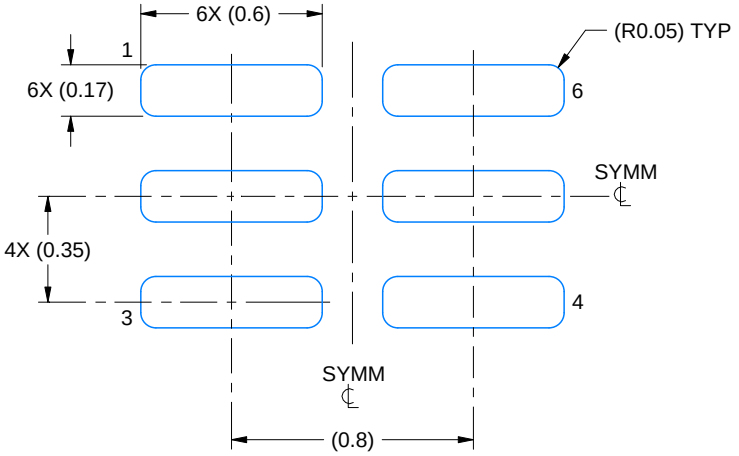

LAND PATTERN EXAMPLE
EXPOSED METAL SHOWN
SCALE:40X

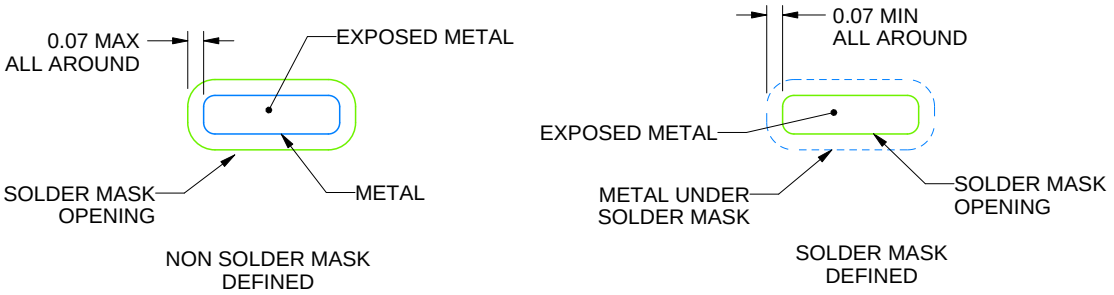

SOLDER MASK DETAILS

4220597/A 06/2017

NOTES: (continued)

4. For more information, see Texas Instruments literature number SLUA271 (www.ti.com/lit/slua271).

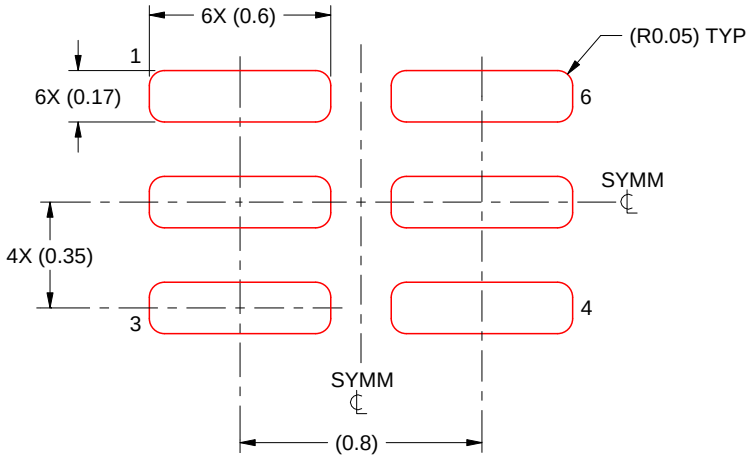

SOLDER PASTE EXAMPLE
BASED ON 0.125 mm THICK STENCIL

PRINTED SOLDER COVERAGE BY AREA UNDER PACKAGE
SCALE:40X

4220597/A 06/2017

4. Laser cutting apertures with trapezoidal walls and rounded corners may offer better paste release. IPC-7525 may have alternate design recommendations.

IMPORTANT NOTICE AND DISCLAIMER

TI PROVIDES TECHNICAL AND RELIABILITY DATA (INCLUDING DATA SHEETS), DESIGN RESOURCES (INCLUDING REFERENCE DESIGNS), APPLICATION OR OTHER DESIGN ADVICE, WEB TOOLS, SAFETY INFORMATION, AND OTHER RESOURCES “AS IS” AND WITH ALL FAULTS, AND DISCLAIMS ALL WARRANTIES, EXPRESS AND IMPLIED, INCLUDING WITHOUT LIMITATION ANY IMPLIED WARRANTIES OF MERCHANTABILITY, FITNESS FOR A PARTICULAR PURPOSE OR NON-INFRINGEMENT OF THIRD PARTY INTELLECTUAL PROPERTY RIGHTS.

These resources are intended for skilled developers designing with TI products. You are solely responsible for (1) selecting the appropriate TI products for your application, (2) designing, validating and testing your application, and (3) ensuring your application meets applicable standards, and any other safety, security, regulatory or other requirements.

These resources are subject to change without notice. TI grants you permission to use these resources only for development of an application that uses the TI products described in the resource. Other reproduction and display of these resources is prohibited. No license is granted to any other TI intellectual property right or to any third party intellectual property right. TI disclaims responsibility for, and you will fully indemnify TI and its representatives against, any claims, damages, costs, losses, and liabilities arising out of your use of these resources.

TI’s products are provided subject to TI’s Terms of Sale or other applicable terms available either on ti.com or provided in conjunction with such TI products. TI’s provision of these resources does not expand or otherwise alter TI’s applicable warranties or warranty disclaimers for TI products.

TI objects to and rejects any additional or different terms you may have proposed.

Mailing Address: Texas Instruments, Post Office Box 655303, Dallas, Texas 75265
Copyright © 2022, Texas Instruments Incorporated