- **Operates With 3-V to 5.5-V V_{CC} Supply**
- **Operates Up To 1 Mbit/s**
- **Low Standby Current . . . 1 μA Typ**
- **External Capacitors . . . 4 × 0.1 μF**
- **Accepts 5-V Logic Input With 3.3-V Supply**
- **RS-232 Bus-Pin ESD Protection Exceeds ±15 kV Using Human-Body Model (HBM)**
- **Applications**
  - **Battery-Powered Systems, PDAs, Notebooks, Laptops, Palmtop PCs, and Hand-Held Equipment**

DB, DW, OR PW PACKAGE
(TOP VIEW)

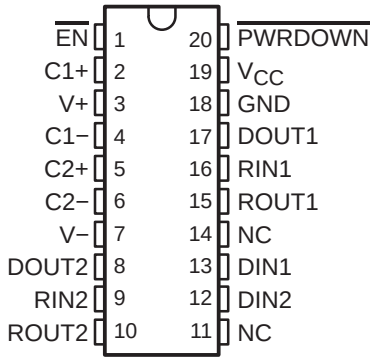

NC − No internal connection

description/ordering information

The SN65C3222 and SN75C3222 consist of two line drivers, two line receivers, and a dual charge-pump circuit with ±15-kV ESD protection pin to pin (serial-port connection pins, including GND). The devices provide the electrical interface between an asynchronous communication controller and the serial-port connector. The charge pump and four small external capacitors allow operation from a single 3-V to 5.5-V supply. The devices operate at data signaling rates up to 1 Mbit/s and a driver output slew rate of 24 V/μs to 150 V/μs.

The SN65C3222 and SN75C3222 can be placed in the power-down mode by setting $\overline{\text{PWRDOWN}}$ low, which draws only 1 μA from the power supply. When the devices are powered down, the receivers remain active while the drivers are placed in the high-impedance state. Also, during power down, the onboard charge pump is disabled, V+ is lowered to V_{CC}, and V− is raised toward GND. Receiver outputs also can be placed in the high-impedance state by setting $\overline{\text{EN}}$ high.

ORDERING INFORMATION

T_A	PACKAGE†		ORDERABLE PART NUMBER	TOP-SIDE MARKING
−0°C to 70°C	SOIC (DW)	Tube of 25	SN75C3222DW	75C3222
		Reel of 2000	SN75C3222DWR	
	SSOP (DB)	Reel of 2000	SN75C3222DBR	CA3222
	TSSOP (PW)	Tube of 70	SN75C3222PW	CA3222
		Reel of 2000	SN75C3222PWR	
−40°C to 85°C	SOIC (DW)	Tube of 25	SN65C3222DW	65C3222
		Reel of 2000	SN65C3222DWR	
	SSOP (DB)	Reel of 2000	SN65C3222DBR	CB3222
	TSSOP (PW)	Tube of 70	SN65C3222PW	CB3222
		Reel of 2000	SN65C3222PWR	

† Package drawings, standard packing quantities, thermal data, symbolization, and PCB design guidelines are available at www.ti.com/sc/package.

Please be aware that an important notice concerning availability, standard warranty, and use in critical applications of Texas Instruments semiconductor products and disclaimers thereto appears at the end of this data sheet.

PRODUCTION DATA information is current as of publication date. Products conform to specifications per the terms of Texas Instruments standard warranty. Production processing does not necessarily include testing of all parameters.

Copyright © 2004, Texas Instruments Incorporated

Function Tables

EACH DRIVER

INPUTS		OUTPUT DOUT
DIN	$\overline{\text{PWRDOWN}}$	
X	L	Z
L	H	H
H	H	L

H = high level, L = low level, X = irrelevant,
Z = high impedance

EACH RECEIVER

INPUTS		OUTPUT ROUT
RIN	$\overline{\text{EN}}$	
L	L	H
H	L	L
X	H	Z
Open	L	H

H = high level, L = low level, X = irrelevant,
Z = high impedance (off), Open = input disconnected or connected driver off

logic diagram (positive logic)

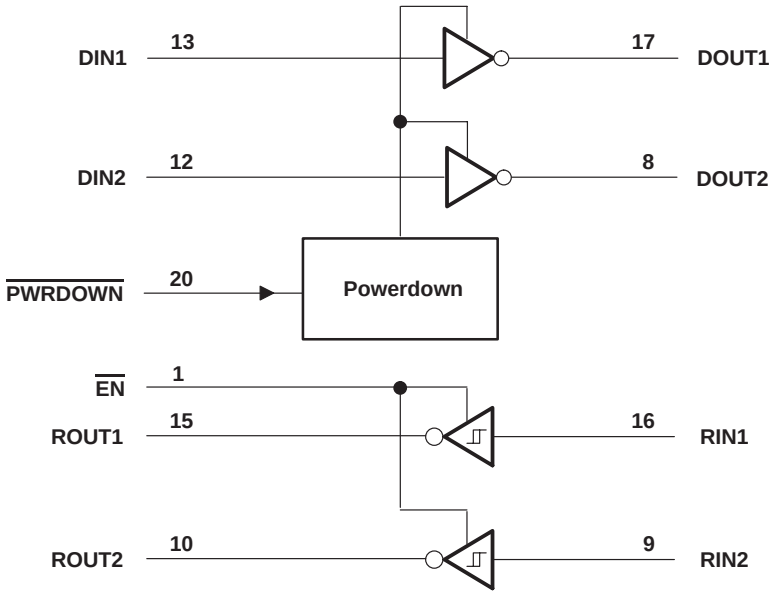

absolute maximum ratings over operating free-air temperature range (unless otherwise noted)†

Supply voltage range, V_{CC} (see Note 1) . . . . . −0.3 V to 6 V
Positive output supply voltage range, V+ (see Note 1) . . . . . −0.3 V to 7 V
Negative output supply voltage range, V− (see Note 1) . . . . . 0.3 V to −7 V
Supply voltage difference, V+ − V− (see Note 1) . . . . . 13 V
Input voltage range, V_I: Drivers, $\overline{EN}$, $\overline{PWRDOWN}$ . . . . . −0.3 V to 6 V
Receivers . . . . . −25 V to 25 V
Output voltage range, V_O: Drivers . . . . . −13.2 V to 13.2 V
Receivers . . . . . −0.3 V to V_{CC} + 0.3 V
Package thermal impedance, θ_{JA} (see Notes 2 and 3): DB package . . . . . 70°C/W
DW package . . . . . 58°C/W
PW package . . . . . 83°C/W
Operating virtual junction temperature, T_J . . . . . 150°C
Storage temperature range, T_{stg} . . . . . −65°C to 150°C

† Stresses beyond those listed under “absolute maximum ratings” may cause permanent damage to the device. These are stress ratings only, and functional operation of the device at these or any other conditions beyond those indicated under “recommended operating conditions” is not implied. Exposure to absolute-maximum-rated conditions for extended periods may affect device reliability.

NOTES: 1. All voltages are with respect to network GND.
2. Maximum power dissipation is a function of T_J(max), θ_{JA}, and T_A. The maximum allowable power dissipation at any allowable ambient temperature is $P_D = (T_J(max) - T_A)/\theta_{JA}$. Operating at the absolute maximum T_J of 150°C can affect reliability.
3. The package thermal impedance is calculated in accordance with JESD 51-7.

recommended operating conditions (see Note 4 and Figure 5)

				MIN	NOM	MAX	UNIT
	Supply voltage	V_{CC} = 3.3 V		3	3.3	3.6	V
		V_{CC} = 5 V		4.5	5	5.5	
V_{IH}	Driver and control high-level input voltage	DIN, $\overline{EN}$, $\overline{PWRDOWN}$	V_{CC} = 3.3 V	2			V
			V_{CC} = 5 V	2.4			
V_{IL}	Driver and control low-level input voltage	DIN, $\overline{EN}$, $\overline{PWRDOWN}$				0.8	V
V_I	Driver and control input voltage	DIN, $\overline{EN}$, $\overline{PWRDOWN}$		0		5.5	V
V_I	Receiver input voltage			−25		25	V
T_A	Operating free-air temperature	SN65C3222		−40		85	°C
		SN75C3222		0		70	

NOTE 4: Test conditions are C1−C4 = 0.1 µF at V_{CC} = 3.3 V ± 0.3 V; C1 = 0.047 µF, C2−C4 = 0.33 µF at V_{CC} = 5 V ± 0.5 V.

electrical characteristics over recommended ranges of supply voltage and operating free-air temperature (unless otherwise noted) (see Note 4 and Figure 5)

PARAMETER		TEST CONDITIONS	MIN	TYP‡	MAX	UNIT
I_I	Input leakage current ($\overline{EN}$, $\overline{PWRDOWN}$)			±0.01	±1	µA
I_{CC}	Supply current	No load, $\overline{PWRDOWN}$ at V_{CC}		0.3	1	mA
	Supply current (powered off)	No load, $\overline{PWRDOWN}$ at GND		1	10	µA

‡ All typical values are at V_{CC} = 3.3 V or V_{CC} = 5 V, and T_A = 25°C.
NOTE 4: Test conditions are C1−C4 = 0.1 µF at V_{CC} = 3.3 V ± 0.3 V; C1 = 0.047 µF, C2−C4 = 0.33 µF at V_{CC} = 5 V ± 0.5 V.

DRIVER SECTION

electrical characteristics over recommended ranges of supply voltage and operating free-air temperature (unless otherwise noted) (see Note 4 and Figure 5)

PARAMETER		TEST CONDITIONS		MIN	TYP†	MAX	UNIT
V_{OH}	High-level output voltage	DOUT at R_L = 3 kΩ to GND, DIN = GND		5	5.4		V
V_{OL}	Low-level output voltage	DOUT at R_L = 3 kΩ to GND, DIN = V_{CC}		−5	−5.4		V
I_{IH}	High-level input current	$V_I = V_{CC}$			±0.01	±1	µA
I_{IL}	Low-level input current	V_I at GND			±0.01	±1	µA
I_{OS}	Short-circuit output current‡	V_{CC} = 3.6 V,	V_O = 0 V		±35	±60	mA
		V_{CC} = 5.5 V,	V_O = 0 V		±35	±90	
r_o	Output resistance	V_{CC}, V+, and V− = 0 V,	V_O = ±2 V	300	10M		Ω
I_{off}	Output leakage current	$\overline{PWRDOWN}$ = GND	V_O = ±12 V, V_{CC} = 3 V to 3.6 V			±25	µA
			V_O = ±10 V, V_{CC} = 4.5 V to 5.5 V			±25	

† All typical values are at V_{CC} = 3.3 V or V_{CC} = 5 V, and T_A = 25°C.
‡ Short-circuit durations should be controlled to prevent exceeding the device absolute power-dissipation ratings, and not more than one output should be shorted at a time.
NOTE 4: Test conditions are C1−C4 = 0.1 µF at V_{CC} = 3.3 V ± 0.3 V; C1 = 0.047 µF, C2−C4 = 0.33 µF at V_{CC} = 5 V ± 0.5 V.

switching characteristics over recommended ranges of supply voltage and operating free-air temperature (unless otherwise noted) (see Note 4 and Figure 4)

PARAMETER		TEST CONDITIONS		MIN	TYP†	MAX	UNIT
Maximum data rate (see Figure 1)		R_L = 3 kΩ, One DOUT switching	C_L = 1000 pF	250			kbit/s
			C_L = 250 pF, V_{CC} = 3 V to 4.5 V	1000			
			C_L = 1000 pF, V_{CC} = 4.5 V to 5.5 V	1000			
$t_{sk(p)}$	Pulse skew§	C_L = 150 pF to 2500 pF	R_L = 3 kΩ to 7 kΩ, See Figure 2		300		ns
SR(tr)	Slew rate, transition region (see Figure 1)	R_L = 3 kΩ to 7 kΩ, V_{CC} = 3.3 V	C_L = 150 pF to 1000 pF	18		150	V/µs

† All typical values are at V_{CC} = 3.3 V or V_{CC} = 5 V, and T_A = 25°C.
§ Pulse skew is defined as $|t_{PLH} - t_{PHL}|$ of each channel of the same device.
NOTE 4: Test conditions are C1−C4 = 0.1 µF at V_{CC} = 3.3 V ± 0.3 V; C1 = 0.047 µF, C2−C4 = 0.33 µF at V_{CC} = 5 V ± 0.5 V.

RECEIVER SECTION

electrical characteristics over recommended ranges of supply voltage and operating free-air temperature (unless otherwise noted) (see Note 4 and Figure 5)

PARAMETER		TEST CONDITIONS	MIN	TYP†	MAX	UNIT
V_{OH}	High-level output voltage	I_{OH} = −1 mA	V_{CC} − 0.6 V	V_{CC} − 0.1 V		V
V_{OL}	Low-level output voltage	I_{OL} = 1.6 mA			0.4	V
V_{IT+}	Positive-going input threshold voltage	V_{CC} = 3.3 V		1.5	2.4	V
		V_{CC} = 5 V		1.8	2.4	
V_{IT-}	Negative-going input threshold voltage	V_{CC} = 3.3 V	0.6	1.2		V
		V_{CC} = 5 V	0.8	1.5		
V_{hys}	Input hysteresis (V_{IT+} − V_{IT-})			0.3		V
I_{off}	Output leakage current	$\overline{EN}$ = V_{CC}		±0.05	±10	µA
r_i	Input resistance	V_I = ±3 V to ±25 V	3	5	7	kΩ

† All typical values are at V_{CC} = 3.3 V or V_{CC} = 5 V, and T_A = 25°C.
NOTE 4: Test conditions are C1−C4 = 0.1 µF at V_{CC} = 3.3 V ± 0.3 V; C1 = 0.047 µF, C2−C4 = 0.33 µF at V_{CC} = 5 V ± 0.5 V.

switching characteristics over recommended ranges of supply voltage and operating free-air temperature (unless otherwise noted) (see Note 4)

PARAMETER		TEST CONDITIONS	MIN	TYP†	MAX	UNIT
t_{PLH}	Propagation delay time, low- to high-level output	C_L = 150 pF, See Figure 3		300		ns
t_{PHL}	Propagation delay time, high- to low-level output	C_L= 150 pF, See Figure 3		300		ns
t_{en}	Output enable time	C_L= 150 pF, R_L = 3 kΩ, See Figure 4		200		ns
t_{dis}	Output disable time	C_L= 150 pF, R_L = 3 kΩ, See Figure 4		200		ns
$t_{sk(p)}$	Pulse skew‡	See Figure 3		300		ns

† All typical values are at V_{CC} = 3.3 V or V_{CC} = 5 V, and T_A = 25°C.
‡ Pulse skew is defined as $|t_{PLH} - t_{PHL}|$ of each channel of the same device.
NOTE 4: Test conditions are C1−C4 = 0.1 µF at V_{CC} = 3.3 V ± 0.3 V; C1 = 0.047 µF, C2−C4 = 0.33 µF at V_{CC} = 5 V ± 0.5 V.

PARAMETER MEASUREMENT INFORMATION

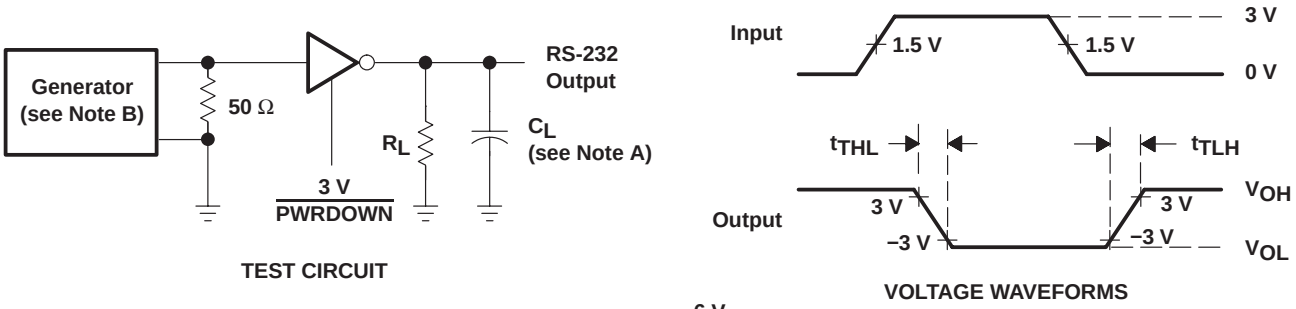

$$SR(tr) = \frac{6\ V}{t_{THL}\ \text{or}\ t_{TLH}}$$

NOTES: A. C_L includes probe and jig capacitance.
B. The pulse generator has the following characteristics: PRR = 250 kbit/s, Z_O = 50 Ω, 50% duty cycle, $t_r \le 10$ ns, $t_f \le 10$ ns.

Figure 1. Driver Slew Rate

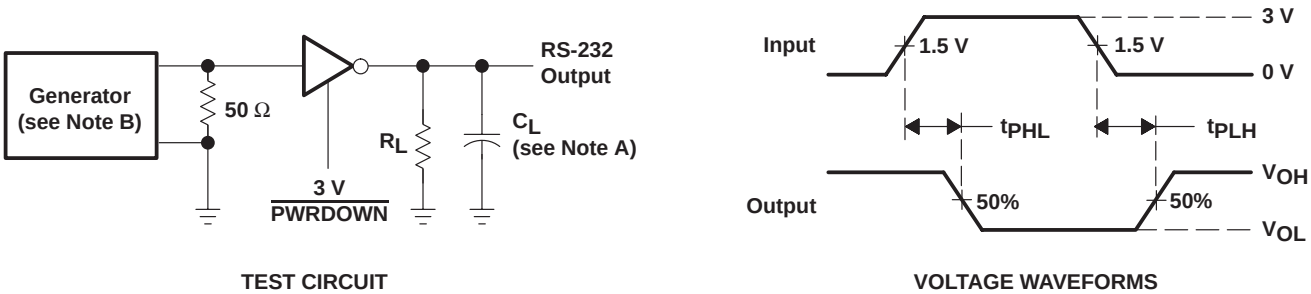

NOTES: A. C_L includes probe and jig capacitance.
B. The pulse generator has the following characteristics: PRR = 250 kbit/s, Z_O = 50 Ω, 50% duty cycle, $t_r \le 10$ ns, $t_f \le 10$ ns.

Figure 2. Driver Pulse Skew

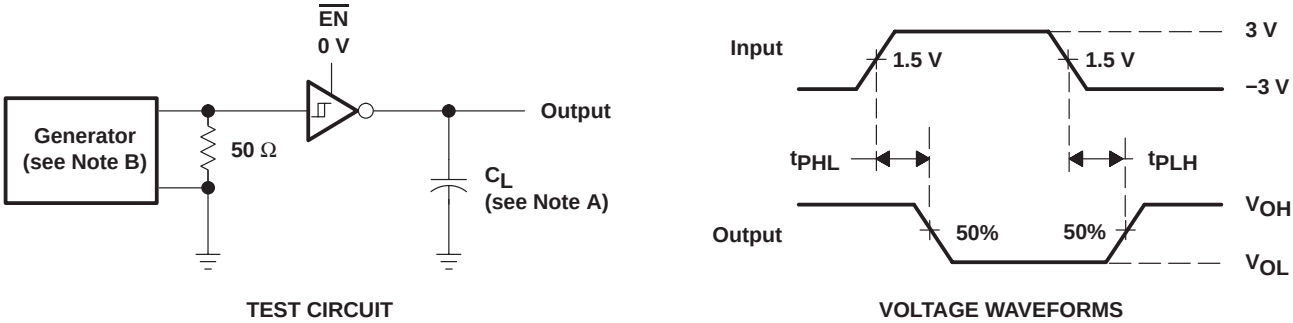

NOTES: A. C_L includes probe and jig capacitance.
B. The pulse generator has the following characteristics: Z_O = 50 Ω, 50% duty cycle, $t_r \le 10$ ns, $t_f \le 10$ ns.

Figure 3. Receiver Propagation-Delay Times

PARAMETER MEASUREMENT INFORMATION

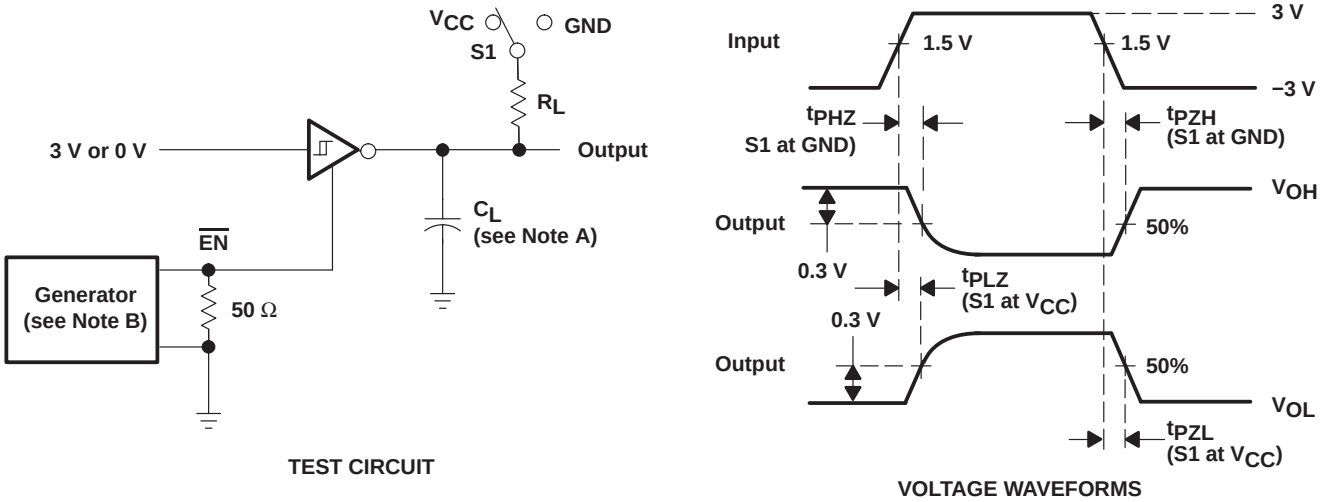

NOTES: A. C_L includes probe and jig capacitance.
B. The pulse generator has the following characteristics: $Z_O = 50\ \Omega$, 50% duty cycle, $t_r \le 10$ ns, $t_f \le 10$ ns.

Figure 4. Receiver Enable and Disable Times

APPLICATION INFORMATION

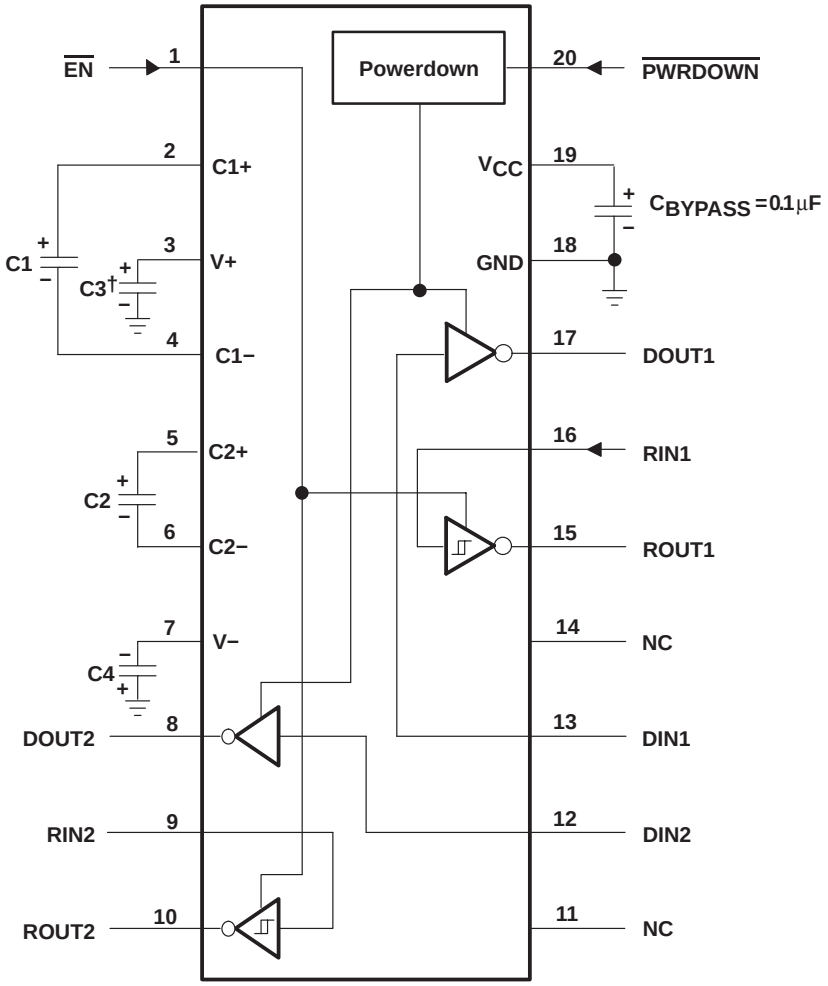

† C3 can be connected to V_{CC} or GND.

NOTES: A. Resistor values shown are nominal.
B. NC − No internal connection

V_{CC} vs CAPACITOR VALUES

V_{CC}	C1	C2, C3, and C4
3.3 V ± 0.3 V	0.1 µF	0.1 µF
5 V ± 0.5 V	0.047 µF	0.33 µF
3 V to 5.5 V	0.1 µF	0.47 µF

Figure 5. Typical Operating Circuit and Capacitor Values

PACKAGING INFORMATION

Orderable Device	Status (1)	Package Type	Package Drawing	Pins	Package Qty	Eco Plan (2)	Lead finish/ Ball material (6)	MSL Peak Temp (3)	Op Temp (°C)	Device Marking (4/5)	Samples
SN65C3222DBR	ACTIVE	SSOP	DB	20	2000	RoHS & Green	NIPDAU	Level-1-260C-UNLIM	-40 to 85	CB3222	Samples
SN65C3222DWR	ACTIVE	SOIC	DW	20	2000	RoHS & Green	NIPDAU	Level-1-260C-UNLIM	-40 to 85	65C3222	Samples
SN65C3222PW	ACTIVE	TSSOP	PW	20	70	RoHS & Green	NIPDAU	Level-1-260C-UNLIM	-40 to 85	CB3222	Samples
SN65C3222PWR	NRND	TSSOP	PW	20	2000	RoHS & Green	NIPDAU	Level-1-260C-UNLIM	-40 to 85	CB3222	
SN75C3222DW	ACTIVE	SOIC	DW	20	25	RoHS & Green	NIPDAU	Level-1-260C-UNLIM	0 to 70	75C3222	Samples
SN75C3222DWG4	ACTIVE	SOIC	DW	20	25	RoHS & Green	NIPDAU	Level-1-260C-UNLIM	0 to 70	75C3222	Samples
SN75C3222DWR	ACTIVE	SOIC	DW	20	2000	RoHS & Green	NIPDAU	Level-1-260C-UNLIM	0 to 70	75C3222	Samples
SN75C3222PW	ACTIVE	TSSOP	PW	20	70	RoHS & Green	NIPDAU	Level-1-260C-UNLIM	0 to 70	CA3222	Samples
SN75C3222PWR	NRND	TSSOP	PW	20	2000	RoHS & Green	NIPDAU	Level-1-260C-UNLIM	0 to 70	CA3222	

(1) The marketing status values are defined as follows:
ACTIVE: Product device recommended for new designs.
LIFEBUY: TI has announced that the device will be discontinued, and a lifetime-buy period is in effect.
NRND: Not recommended for new designs. Device is in production to support existing customers, but TI does not recommend using this part in a new design.
PREVIEW: Device has been announced but is not in production. Samples may or may not be available.
OBSOLETE: TI has discontinued the production of the device.

(2) **RoHS:** TI defines "RoHS" to mean semiconductor products that are compliant with the current EU RoHS requirements for all 10 RoHS substances, including the requirement that RoHS substance do not exceed 0.1% by weight in homogeneous materials. Where designed to be soldered at high temperatures, "RoHS" products are suitable for use in specified lead-free processes. TI may reference these types of products as "Pb-Free".
RoHS Exempt: TI defines "RoHS Exempt" to mean products that contain lead but are compliant with EU RoHS pursuant to a specific EU RoHS exemption.
Green: TI defines "Green" to mean the content of Chlorine (Cl) and Bromine (Br) based flame retardants meet JS709B low halogen requirements of <=1000ppm threshold. Antimony trioxide based flame retardants must also meet the <=1000ppm threshold requirement.

(3) MSL, Peak Temp. - The Moisture Sensitivity Level rating according to the JEDEC industry standard classifications, and peak solder temperature.

(4) There may be additional marking, which relates to the logo, the lot trace code information, or the environmental category on the device.

(5) Multiple Device Markings will be inside parentheses. Only one Device Marking contained in parentheses and separated by a "~" will appear on a device. If a line is indented then it is a continuation of the previous line and the two combined represent the entire Device Marking for that device.

(6) Lead finish/Ball material - Orderable Devices may have multiple material finish options. Finish options are separated by a vertical ruled line. Lead finish/Ball material values may wrap to two lines if the finish value exceeds the maximum column width.

Important Information and Disclaimer: The information provided on this page represents TI's knowledge and belief as of the date that it is provided. TI bases its knowledge and belief on information provided by third parties, and makes no representation or warranty as to the accuracy of such information. Efforts are underway to better integrate information from third parties. TI has taken and continues to take reasonable steps to provide representative and accurate information but may not have conducted destructive testing or chemical analysis on incoming materials and chemicals. TI and TI suppliers consider certain information to be proprietary, and thus CAS numbers and other limited information may not be available for release.

In no event shall TI's liability arising out of such information exceed the total purchase price of the TI part(s) at issue in this document sold by TI to Customer on an annual basis.

TAPE AND REEL INFORMATION

REEL DIMENSIONS

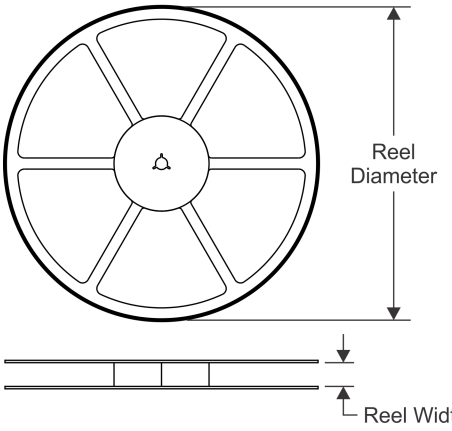

TAPE DIMENSIONS

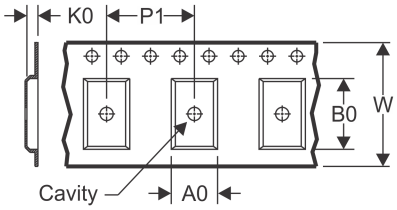

A0	Dimension designed to accommodate the component width
B0	Dimension designed to accommodate the component length
K0	Dimension designed to accommodate the component thickness
W	Overall width of the carrier tape
P1	Pitch between successive cavity centers

QUADRANT ASSIGNMENTS FOR PIN 1 ORIENTATION IN TAPE

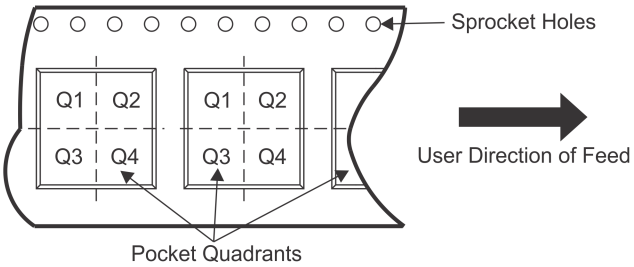

*All dimensions are nominal

Device	Package Type	Package Drawing	Pins	SPQ	Reel Diameter (mm)	Reel Width W1 (mm)	A0 (mm)	B0 (mm)	K0 (mm)	P1 (mm)	W (mm)	Pin1 Quadrant
SN65C3222DBR	SSOP	DB	20	2000	330.0	16.4	8.2	7.5	2.5	12.0	16.0	Q1
SN65C3222DWR	SOIC	DW	20	2000	330.0	24.4	10.8	13.3	2.7	12.0	24.0	Q1
SN65C3222PWR	TSSOP	PW	20	2000	330.0	16.4	6.95	7.1	1.6	8.0	16.0	Q1
SN75C3222DWR	SOIC	DW	20	2000	330.0	24.4	10.8	13.3	2.7	12.0	24.0	Q1
SN75C3222PWR	TSSOP	PW	20	2000	330.0	16.4	6.95	7.0	1.4	8.0	16.0	Q1

TAPE AND REEL BOX DIMENSIONS

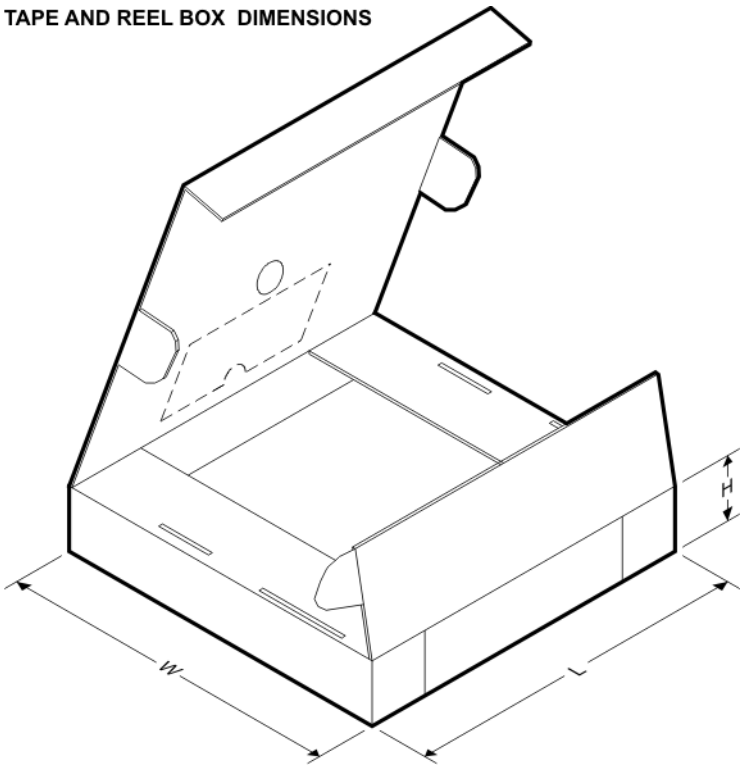

*All dimensions are nominal

Device	Package Type	Package Drawing	Pins	SPQ	Length (mm)	Width (mm)	Height (mm)
SN65C3222DBR	SSOP	DB	20	2000	853.0	449.0	35.0
SN65C3222DWR	SOIC	DW	20	2000	367.0	367.0	45.0
SN65C3222PWR	TSSOP	PW	20	2000	853.0	449.0	35.0
SN75C3222DWR	SOIC	DW	20	2000	367.0	367.0	45.0
SN75C3222PWR	TSSOP	PW	20	2000	853.0	449.0	35.0

TUBE

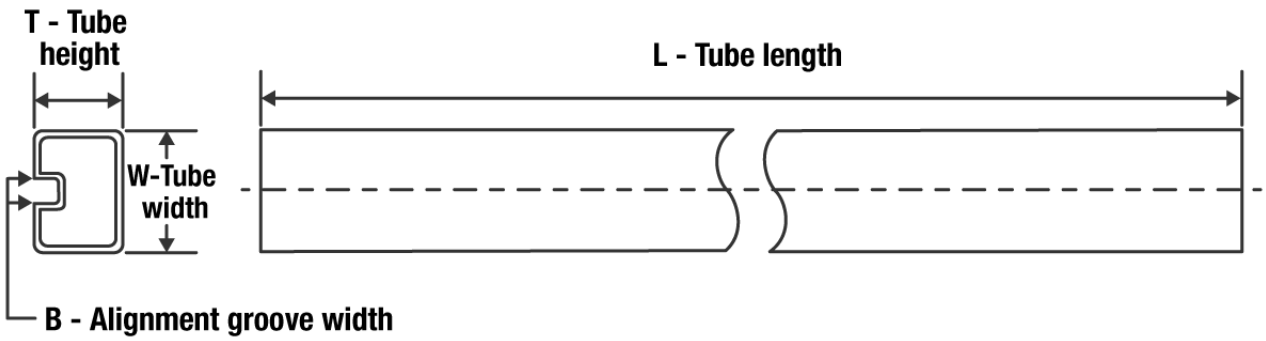

*All dimensions are nominal

Device	Package Name	Package Type	Pins	SPQ	L (mm)	W (mm)	T (µm)	B (mm)
SN65C3222PW	PW	TSSOP	20	70	530	10.2	3600	3.5
SN75C3222DW	DW	SOIC	20	25	507	12.83	5080	6.6
SN75C3222DWG4	DW	SOIC	20	25	507	12.83	5080	6.6
SN75C3222PW	PW	TSSOP	20	70	530	10.2	3600	3.5

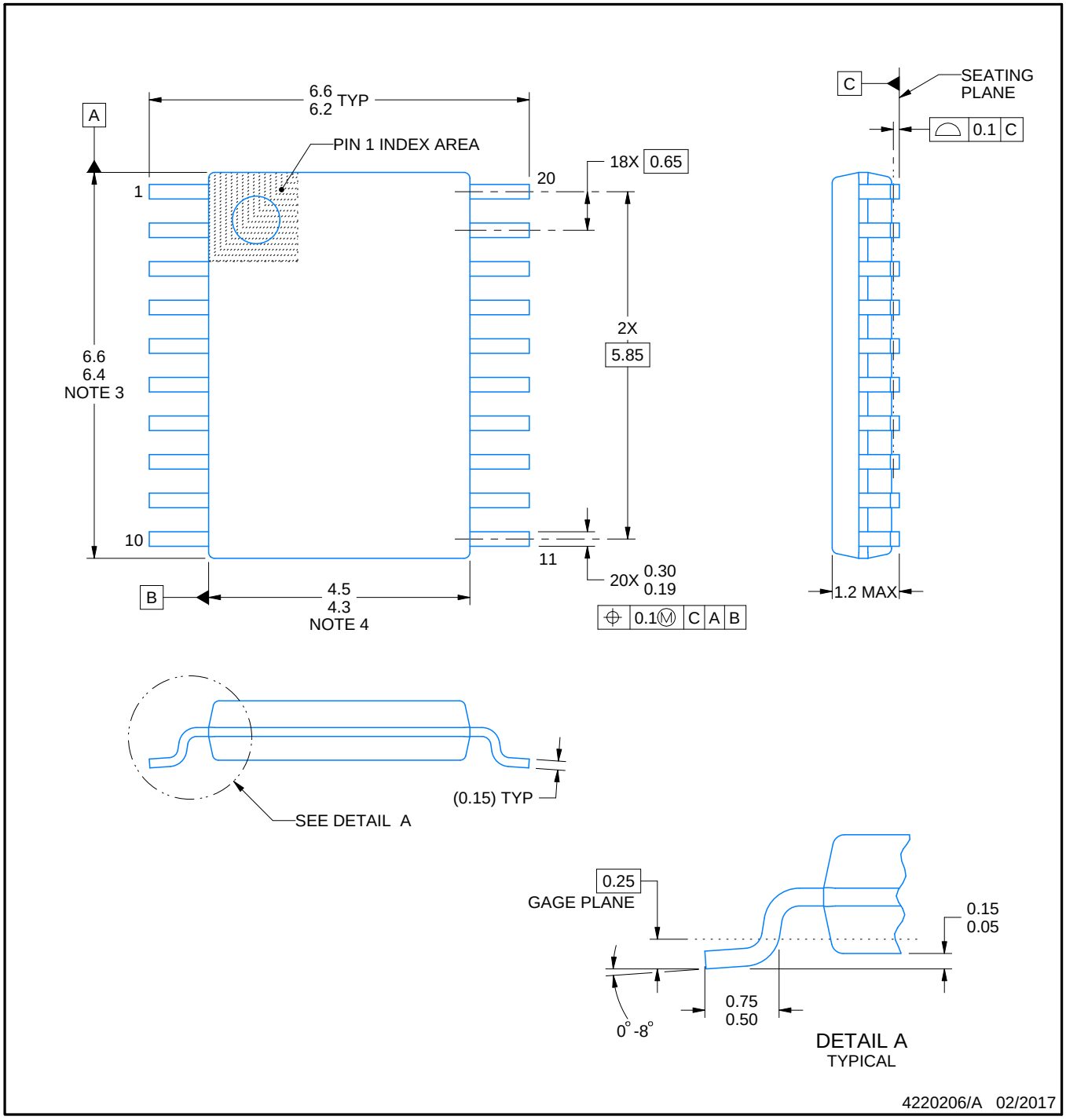

NOTES:

1. All linear dimensions are in millimeters. Any dimensions in parenthesis are for reference only. Dimensioning and tolerancing per ASME Y14.5M.
2. This drawing is subject to change without notice.
3. This dimension does not include mold flash, protrusions, or gate burrs. Mold flash, protrusions, or gate burrs shall not exceed 0.15 mm per side.
4. This dimension does not include interlead flash. Interlead flash shall not exceed 0.25 mm per side.
5. Reference JEDEC registration MO-153.

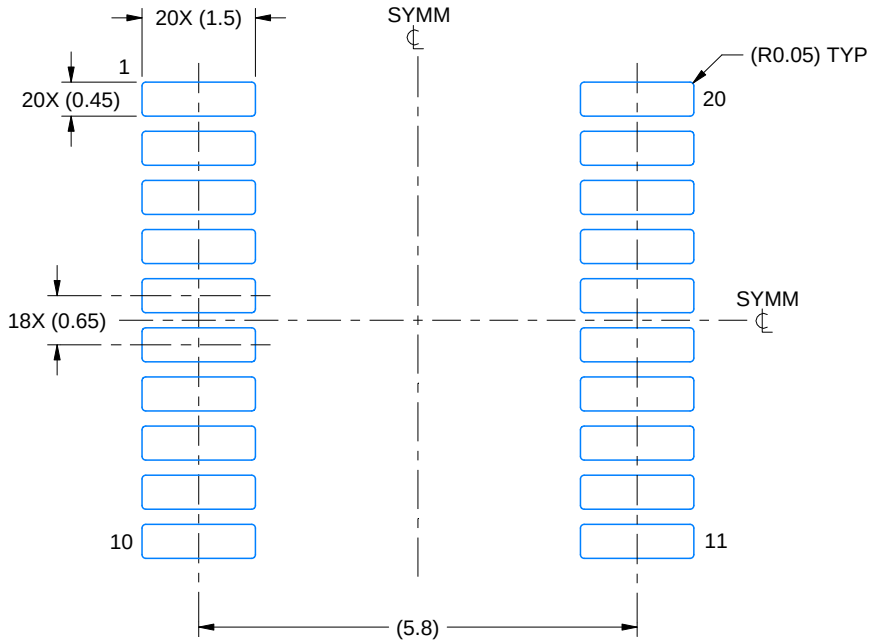

LAND PATTERN EXAMPLE
EXPOSED METAL SHOWN
SCALE: 10X

NON-SOLDER MASK DEFINED (PREFERRED)

SOLDER MASK DEFINED

SOLDER MASK DETAILS

4220206/A 02/2017

NOTES: (continued)

6. Publication IPC-7351 may have alternate designs.
7. Solder mask tolerances between and around signal pads can vary based on board fabrication site.

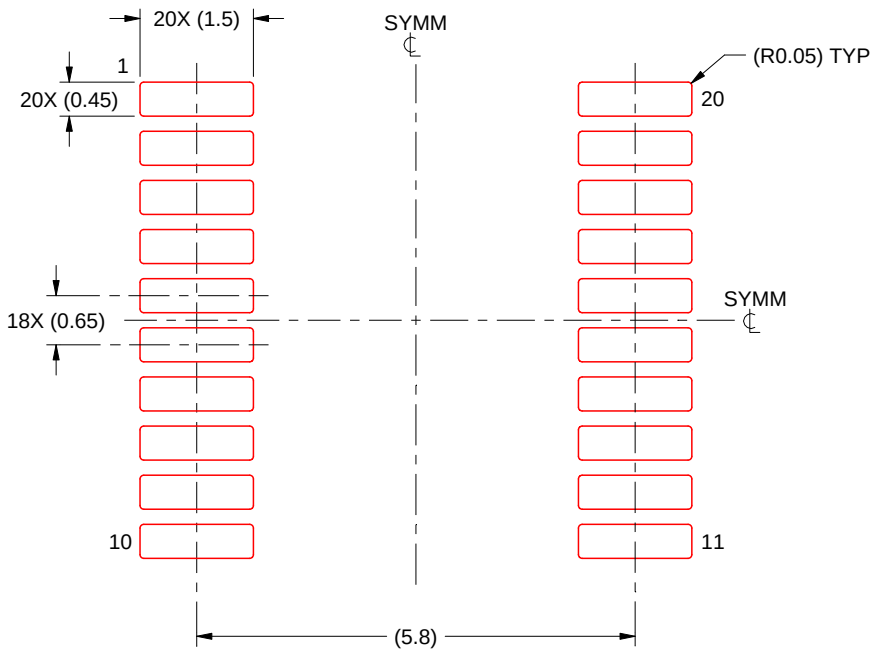

SOLDER PASTE EXAMPLE
BASED ON 0.125 mm THICK STENCIL
SCALE: 10X

4220206/A 02/2017

NOTES: (continued)

8. Laser cutting apertures with trapezoidal walls and rounded corners may offer better paste release. IPC-7525 may have alternate design recommendations.
9. Board assembly site may have different recommendations for stencil design.

PW (R–PDSO–G20) PLASTIC SMALL OUTLINE

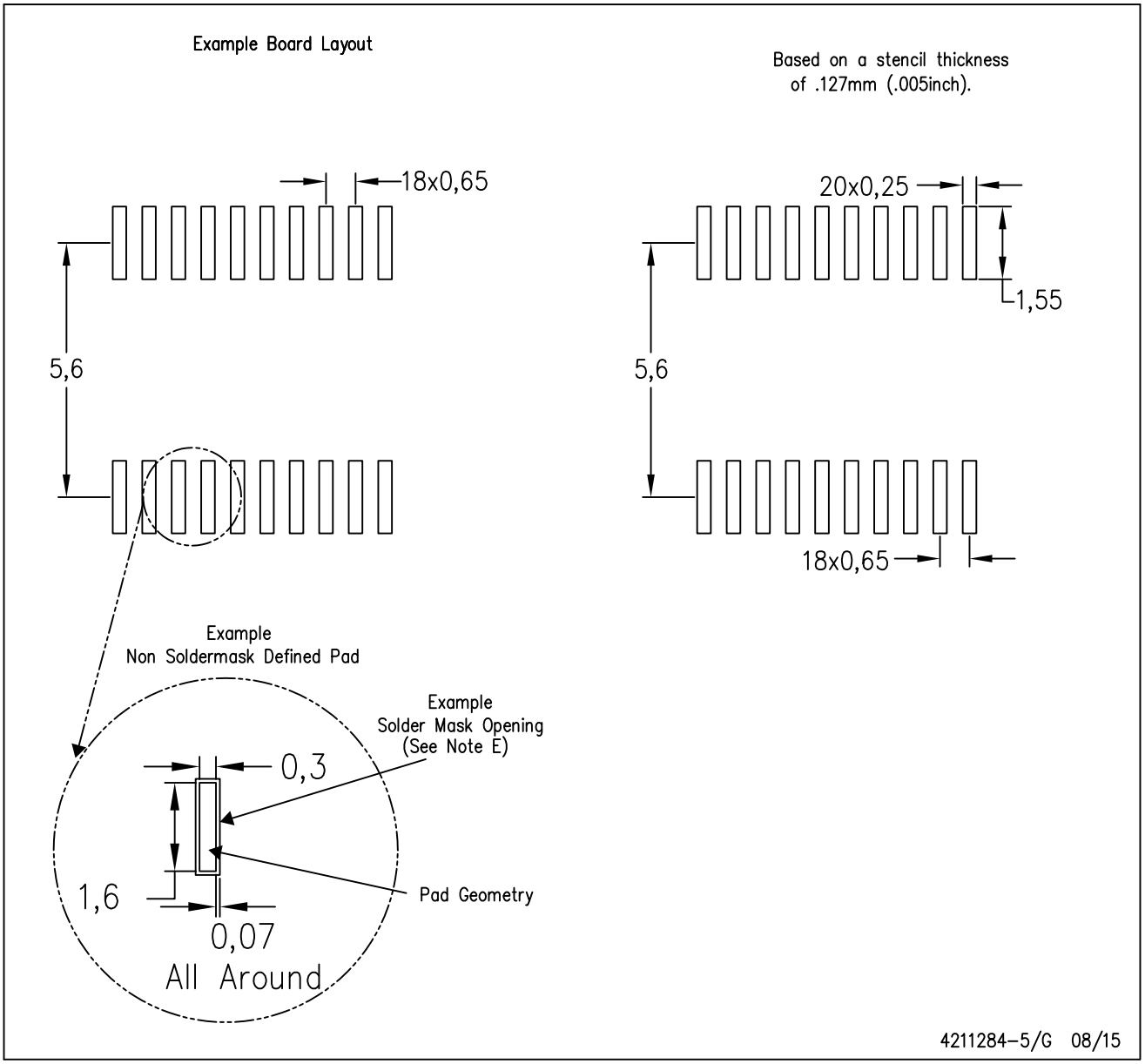

NOTES:
A. All linear dimensions are in millimeters.
B. This drawing is subject to change without notice.
C. Publication IPC–7351 is recommended for alternate design.
D. Laser cutting apertures with trapezoidal walls and also rounding corners will offer better paste release. Customers should contact their board assembly site for stencil design recommendations. Refer to IPC–7525 for other stencil recommendations.
E. Customers should contact their board fabrication site for solder mask tolerances between and around signal pads.

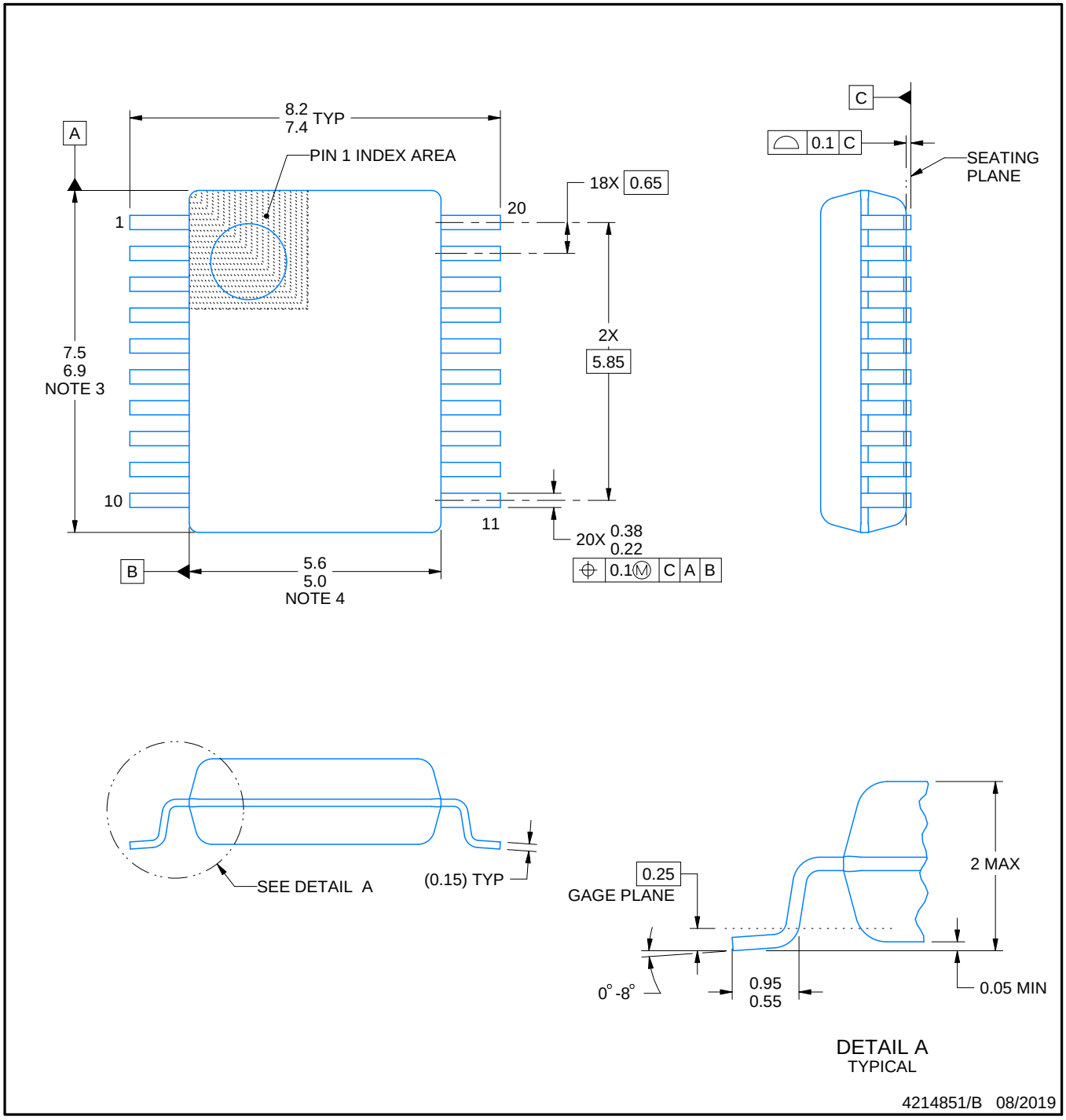

NOTES:

1. All linear dimensions are in millimeters. Any dimensions in parenthesis are for reference only. Dimensioning and tolerancing per ASME Y14.5M.
2. This drawing is subject to change without notice.
3. This dimension does not include mold flash, protrusions, or gate burrs. Mold flash, protrusions, or gate burrs shall not exceed 0.15 mm per side.
4. This dimension does not include interlead flash. Interlead flash shall not exceed 0.25 mm per side.
5. Reference JEDEC registration MO-150.

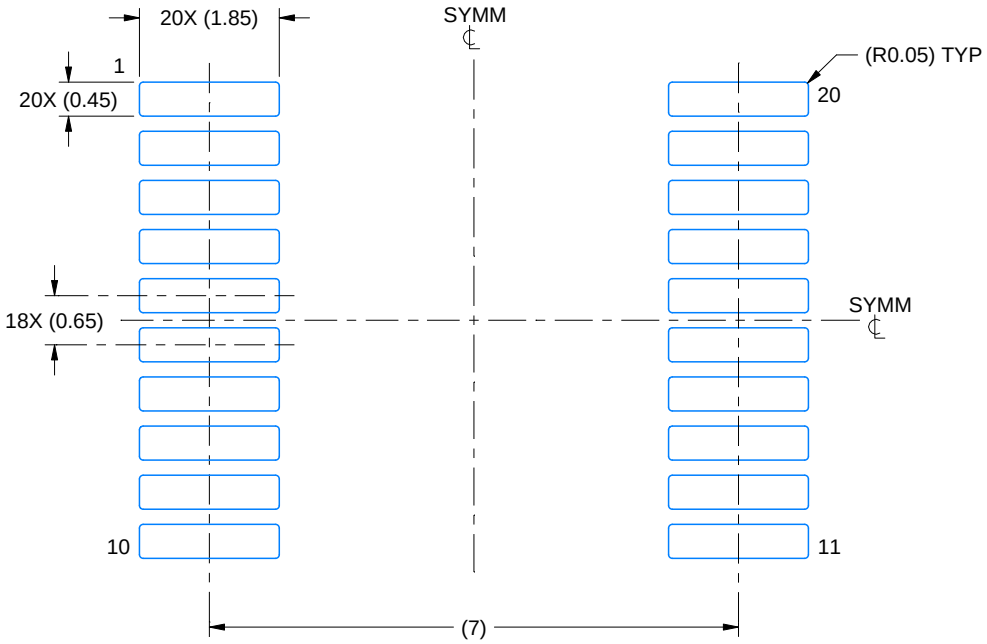

LAND PATTERN EXAMPLE
EXPOSED METAL SHOWN
SCALE: 10X

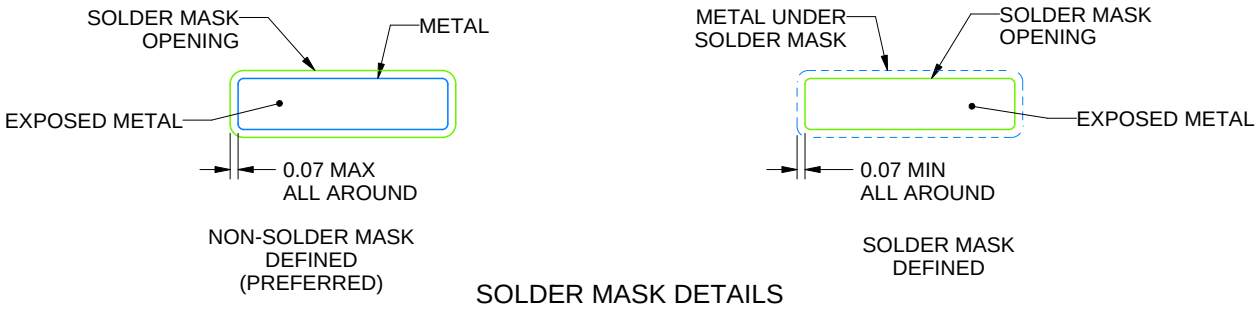

SOLDER MASK DETAILS

4214851/B 08/2019

NOTES: (continued)

6. Publication IPC-7351 may have alternate designs.
7. Solder mask tolerances between and around signal pads can vary based on board fabrication site.

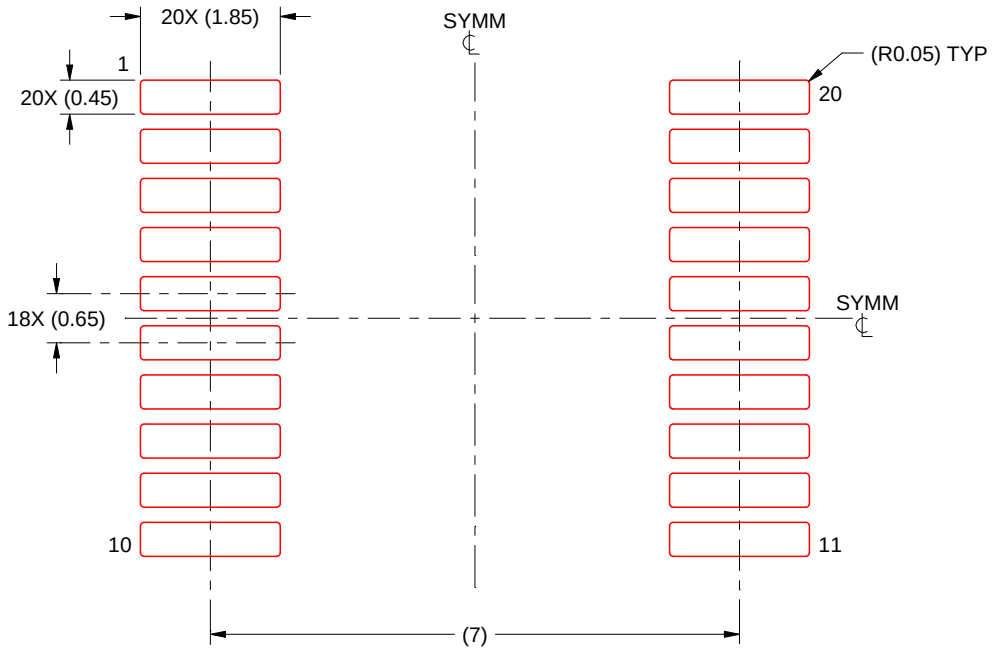

SOLDER PASTE EXAMPLE
BASED ON 0.125 mm THICK STENCIL
SCALE: 10X

4214851/B 08/2019

NOTES: (continued)

8. Laser cutting apertures with trapezoidal walls and rounded corners may offer better paste release. IPC-7525 may have alternate design recommendations.
9. Board assembly site may have different recommendations for stencil design.

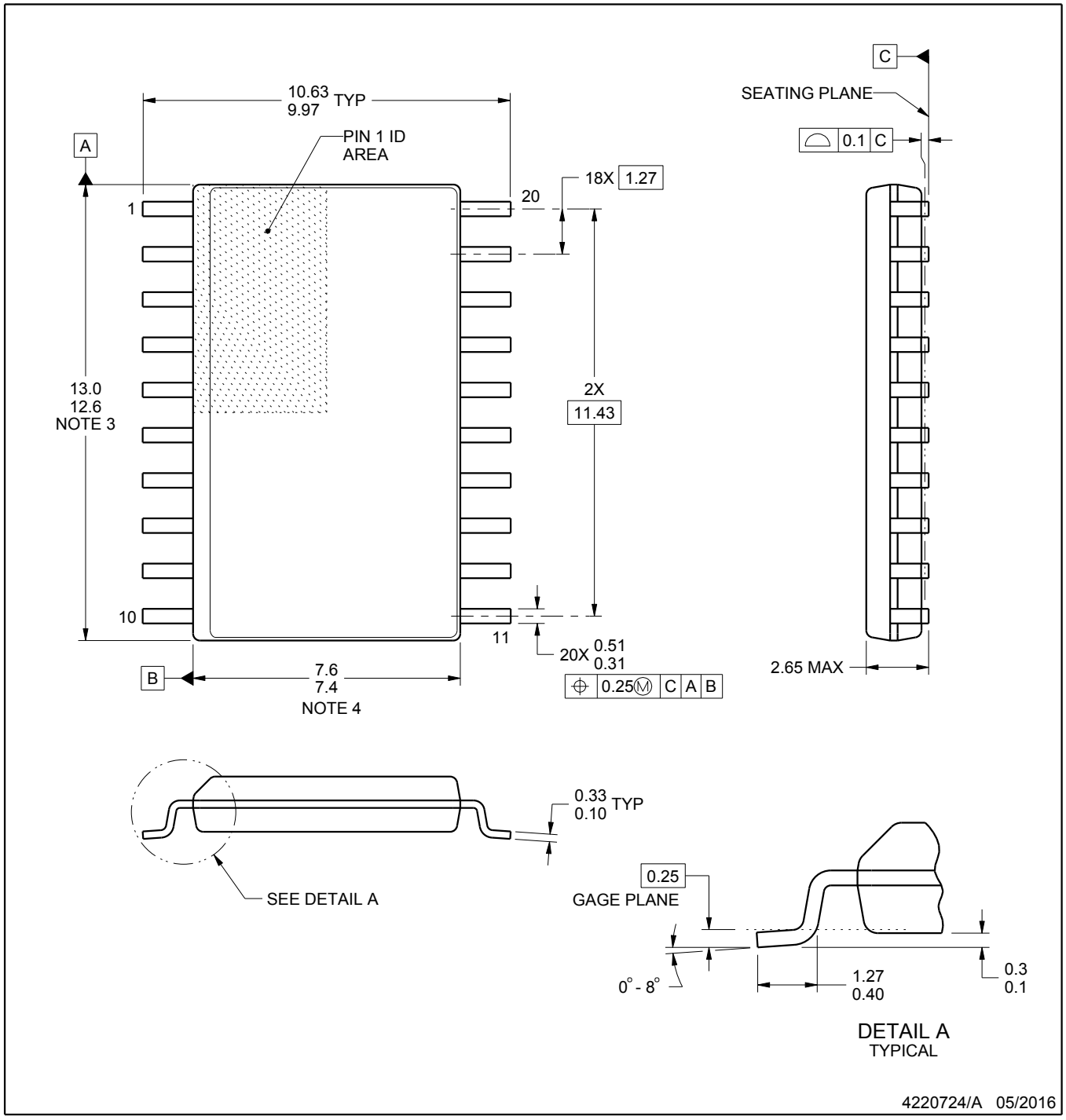

NOTES:

1. All linear dimensions are in millimeters. Dimensions in parenthesis are for reference only. Dimensioning and tolerancing per ASME Y14.5M.
2. This drawing is subject to change without notice.
3. This dimension does not include mold flash, protrusions, or gate burrs. Mold flash, protrusions, or gate burrs shall not exceed 0.15 mm per side.
4. This dimension does not include interlead flash. Interlead flash shall not exceed 0.43 mm per side.
5. Reference JEDEC registration MS-013.

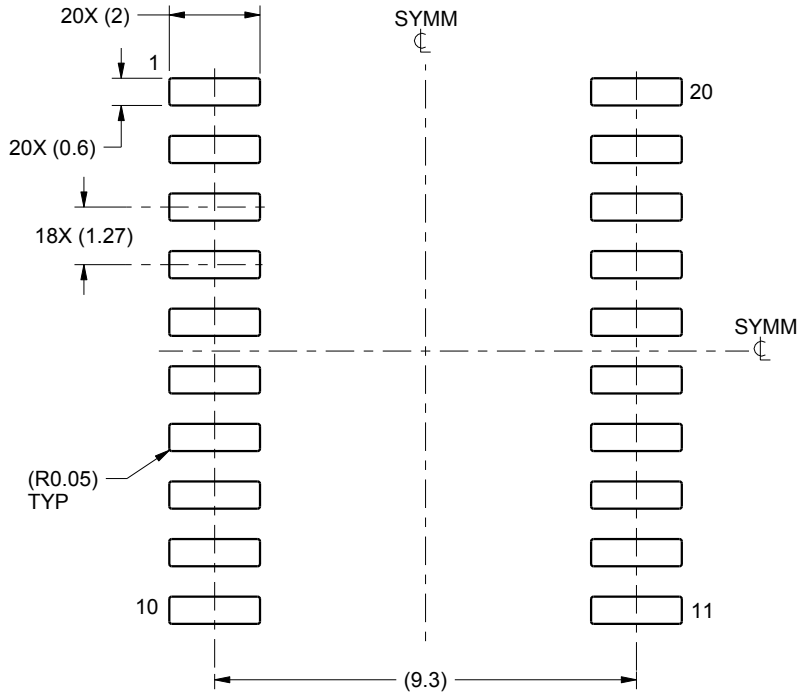

LAND PATTERN EXAMPLE
SCALE:6X

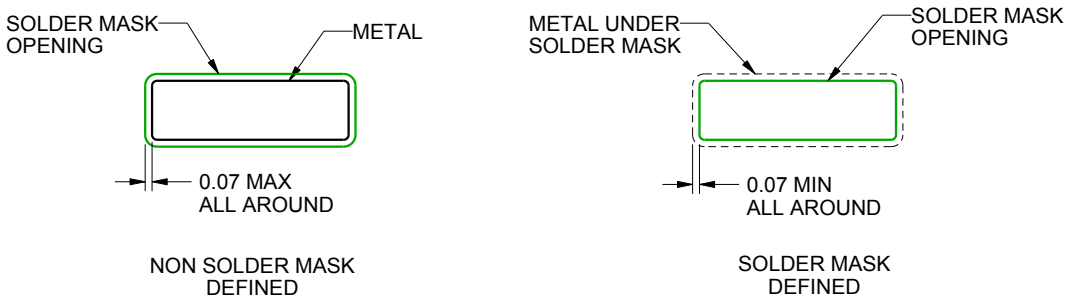

SOLDER MASK DETAILS

4220724/A 05/2016

NOTES: (continued)

6. Publication IPC-7351 may have alternate designs.
7. Solder mask tolerances between and around signal pads can vary based on board fabrication site.

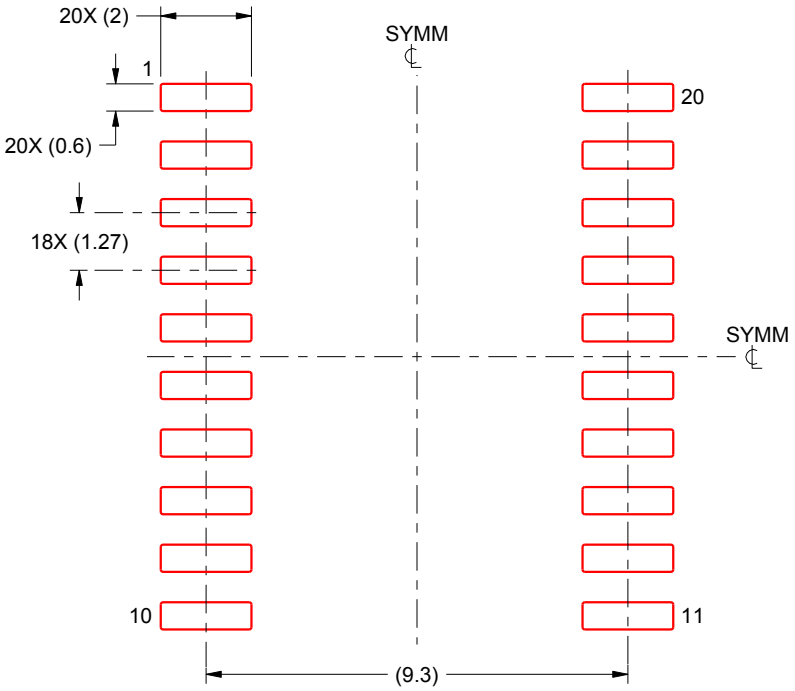

SOLDER PASTE EXAMPLE
BASED ON 0.125 mm THICK STENCIL
SCALE:6X

4220724/A 05/2016

NOTES: (continued)

8. Laser cutting apertures with trapezoidal walls and rounded corners may offer better paste release. IPC-7525 may have alternate design recommendations.
9. Board assembly site may have different recommendations for stencil design.

IMPORTANT NOTICE AND DISCLAIMER

TI PROVIDES TECHNICAL AND RELIABILITY DATA (INCLUDING DATA SHEETS), DESIGN RESOURCES (INCLUDING REFERENCE DESIGNS), APPLICATION OR OTHER DESIGN ADVICE, WEB TOOLS, SAFETY INFORMATION, AND OTHER RESOURCES “AS IS” AND WITH ALL FAULTS, AND DISCLAIMS ALL WARRANTIES, EXPRESS AND IMPLIED, INCLUDING WITHOUT LIMITATION ANY IMPLIED WARRANTIES OF MERCHANTABILITY, FITNESS FOR A PARTICULAR PURPOSE OR NON-INFRINGEMENT OF THIRD PARTY INTELLECTUAL PROPERTY RIGHTS.

These resources are intended for skilled developers designing with TI products. You are solely responsible for (1) selecting the appropriate TI products for your application, (2) designing, validating and testing your application, and (3) ensuring your application meets applicable standards, and any other safety, security, regulatory or other requirements.

These resources are subject to change without notice. TI grants you permission to use these resources only for development of an application that uses the TI products described in the resource. Other reproduction and display of these resources is prohibited. No license is granted to any other TI intellectual property right or to any third party intellectual property right. TI disclaims responsibility for, and you will fully indemnify TI and its representatives against, any claims, damages, costs, losses, and liabilities arising out of your use of these resources.

TI’s products are provided subject to TI’s Terms of Sale or other applicable terms available either on ti.com or provided in conjunction with such TI products. TI’s provision of these resources does not expand or otherwise alter TI’s applicable warranties or warranty disclaimers for TI products.

TI objects to and rejects any additional or different terms you may have proposed.

Mailing Address: Texas Instruments, Post Office Box 655303, Dallas, Texas 75265
Copyright © 2022, Texas Instruments Incorporated