SNx5HVD308xE 低功耗 RS-485 收发器

1 特性

- 符合或超出 TIA/EIA-485A 标准要求
- 低静态功率
  - 有源模式下为 0.3mA
  - 关断模式下为 1nA
- 1/8 单位负载，一条总线上多达 256 个节点
- 高达 15kV 的总线引脚 ESD 保护
- 业界通用 SN75176 封装
- 失效防护接收器（总线开路、总线短接、总线空闲）
- 无干扰上电和下电总线输入和输出

2 应用

- 能量计网络
- 电机控制
- 电源逆变器
- 工业自动化
- 楼宇自动化网络
- 电池供电的应用
- 电信设备

3 描述

SNx5HVD308xE 是专为 RS-485 数据总线网络设计的半双工收发器。这些器件由 5V 电源供电，完全符合 TIA/EIA-485A 标准。这些器件具有受控的转换时间，适用于通过长双绞线电缆传输数据。SN65HVD3082E 和 SN75HVD3082E 经过优化，支持高达 200kbps 的信号传输速率。SN65HVD3085E 适用于高达 1Mbps 的数据传输，而 SN65HVD3088E 适用于要求信号传输速率高达 20Mbps 的应用。

根据设计，这些器件可在非常低的电源电流（通常为 0.3mA，不包括负载）下工作。在非工作关断模式下，电源电流可降至几纳安，因此这些器件非常适合对功率敏感的应用。

这些器件的宽共模范围和高 ESD 保护级别使其适用于要求苛刻的应用，例如能量计网络、电气逆变器、电信机架上的状态和命令信号、有线机箱互连以及噪声容限至关重要的工业自动化网络。这些器件符合 SN75176 器件的业界通用尺寸。上电复位电路使输出保持高阻抗状态，直到电源电压稳定。热关断功能可保护器件免受系统故障问题造成的损坏。SN75HVD3082E 的额定工作气温范围为 0°C 至 70°C，而 SN65HVD308xE 的额定工作气温范围为 –40°C 至 85°C。SN65HVD3082E 的 D 封装版本的额定工作温度范围为 –40°C 至 105°C。

器件信息

器件型号	封装(1)	封装尺寸（标称值）
SN65HVD3082E SN65HVD3088E	SOIC (D) (8)	4.90mm × 3.91mm
	VSSOP (DGK) (8)	3.00mm × 3.00mm
	PDIP (P) (8)	9.81mm × 6.35mm
SN75HVD3082E SN65HVD3085E	SOIC (D) (8)	4.90mm × 3.91mm
	VSSOP (DGK) (8)	3.00mm × 3.00mm

(1) 如需了解所有可用封装，请参阅数据表末尾的可订购产品附录。

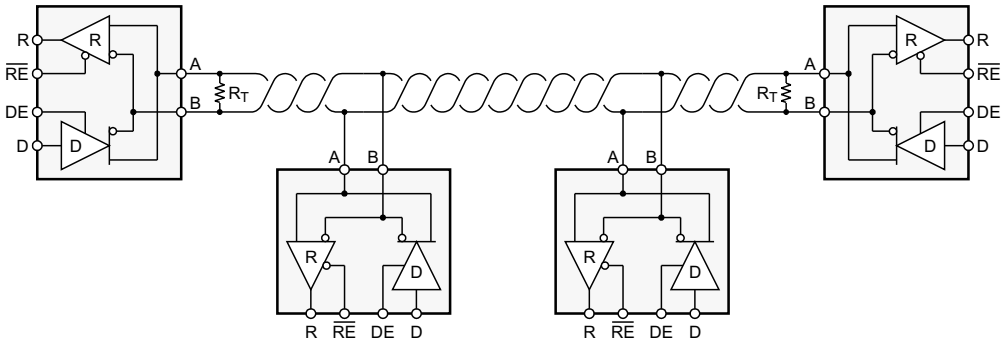

简化版原理图

本文档旨在为方便起见，提供有关 TI 产品中文版本的信息，以确认产品的概要。有关适用的官方英文版本的最新信息，请访问 www.ti.com，其内容始终优先。TI 不保证翻译的准确性和有效性。在实际设计之前，请务必参考最新版本的英文版本。

Table of Contents

1 特性 ... 1
2 应用 ... 1
3 描述 ... 1
4 Revision History ... 2
5 Pin Configuration and Functions ... 4
6 Specifications ... 4
6.1 Absolute Maximum Ratings ... 4
6.2 ESD Ratings ... 4
6.3 Recommended Operating Conditions ... 5
6.4 Thermal Information ... 5
6.5 Thermal Information ... 5
6.6 Electrical Characteristics: Driver ... 6
6.7 Electrical Characteristics: Receiver ... 6
6.8 Electrical Characteristics ... 7
6.9 Switching Characteristics: Driver ... 7
6.10 Switching Characteristics ... 8
6.11 Typical Characteristics ... 9
7 Parameter Measurement Information ... 11
8 Detailed Description ... 15
8.1 Overview ... 15
8.2 Functional Block Diagram ... 15
8.3 Feature Description ... 15
8.4 Device Functional Modes ... 15
9 Application and Implementation ... 17
9.1 Application Information ... 17
9.2 Typical Application ... 17
10 Power Supply Recommendations ... 21
11 Layout ... 21
11.1 Layout Guidelines ... 21
11.2 Layout Example ... 21
11.3 Thermal Considerations for IC Packages ... 22
12 Device and Documentation Support ... 23
12.1 Device Support ... 23
12.2 Related Links ... 23
12.3 接收文档更新通知 ... 23
12.4 支持资源 ... 23
12.5 Trademarks ... 23
12.6 静电放电警告 ... 23
12.7 术语表 ... 23
13 Mechanical, Packaging, and Orderable Information ... 24

4 Revision History

注：以前版本的页码可能与当前版本的页码不同

Changes from Revision K (July 2021) to Revision L (November 2021) — **Page**

- 删除了*特性*：采用小型 MSOP-8 封装 ... 1
- 从标题中删除了“采用小型 MSOP-8 封装” ... 1
- Changed the ψ_{JT} D package value from 78.8 to 8.8 in the Thermal Information ... 5

Changes from Revision J (October 2017) to Revision K (July 2021) — **Page**

- Changed the *Thermal Information* section ... 5

Changes from Revision I (September 2016) to Revision J (October 2017) — **Page**

- Changed 3.3 V to 5 V on the V_{CC} pin in 图 9-4 ... 19

Changes from Revision H (August 2015) to Revision I (September 2016) — **Page**

- 向*节 3* 添加了文本“SN65HVD3082E 的 D 封装版本的额定工作温度范围为 –40°C 至 105°C。” ... 1
- Changed the Operating free-air temperature for SN65HVD3082E (D package) From: MAX = 85°C To: 105°C in *节 6.3* ... 5

Changes from Revision G (May 2009) to Revision H (August 2015) — **Page**

- 添加了*引脚配置和功能* 部分、*ESD 等级* 表、*特性说明* 部分、*器件功能模式*、*应用和实施* 部分、*电源相关建议* 部分、*布局* 部分、*器件和文档支持* 部分以及*机械、封装和可订购信息* 部分 ... 1
- 删除了*功耗额定值* 表 ... 1
- Added storage temperature T_{stg} to *Absolute Maximum Ratings* table ... 4
- Deleted *Package Thermal Information* table ... 6

Copyright © 2022 Texas Instruments Incorporated

Changes from Revision F (March 2009) to Revision G (May 2009) **Page**

- Added Graph - *Driver Rise and Fall Time vs Temperature* 9
- Added IDLE Bus to the *Function* Table..... 15
- Added *Receiver Failsafe* section..... 19

Copyright © 2022 Texas Instruments Incorporated

5 Pin Configuration and Functions

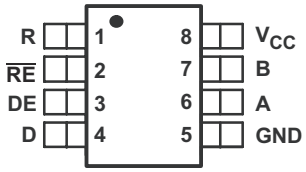

图 5-1. D (SOIC), P (PDIP), and DGK (VSSOP) Packages, 8-Pin, Top View

表 5-1. Pin Functions

PIN		TYPE	DESCRIPTION
NAME	NO.		
A	6	Bus input/output	Driver output or receiver input (complementary to B)
B	7	Bus input/output	Driver output or receiver input (complementary to A)
D	4	Digital input	Driver data input
DE	3	Digital input	Driver enable, active high
GND	5	Reference potential	Local device ground
R	1	Digital output	Receive data output
$\overline{RE}$	2	Digital input	Receiver enable, active low
V_{CC}	8	Supply	4.5-V to 5.5-V supply

6 Specifications

6.1 Absolute Maximum Ratings

over operating free-air temperature range unless otherwise noted(1) (2)

	MIN	MAX	UNIT
Supply voltage, V_{CC}	– 0.5	7	V
Voltage at A or B	– 9	14	V
Voltage at any logic pin	– 0.3	V_{CC} + 0.3	V
Receiver output current	– 24	24	mA
Voltage input, transient pulse, A and B, through 100 Ω (see 图 7-13)	– 50	50	V
Junction Temperature, T_J		170	°C
Storage temperature, T_{stg}		150	°C

(1) Operation outside the *Absolute Maximum Ratingss* may cause permanent device damage. *Absolute Maximum Ratings* do not imply functional operation of the device at these or any other conditions beyond those listed under *Recommended Operating Conditions*. If used outside the *Recommended Operating Conditions* but within the *Absolute Maximum Ratings*, the device may not be fully functional, and this may affect device reliability, functionality, performance, and shorten the device lifetime
(2) All voltage values, except differential I/O bus voltages, are with respect to network ground terminal.

6.2 ESD Ratings

			VALUE	UNIT
$V_{(ESD)}$ Electrostatic discharge	Human body model (HBM), per ANSI/ESDA/JEDEC JS-001(1)	Bus pins and GND	±15000	V
		All pins	±4000	
	Charged-device model (CDM), per JEDEC specification JESD22-C101(2)		±1000	
	Electrical Fast Transient/Burst, A, B, and GND(3)		±4000	

(1) JEDEC document JEP155 states that 500-V HBM allows safe manufacturing with a standard ESD control process.
(2) JEDEC document JEP157 states that 250-V CDM allows safe manufacturing with a standard ESD control process.
(3) Tested in accordance with IEC 61000-4-4.

Copyright © 2022 Texas Instruments Incorporated

6.3 Recommended Operating Conditions

over operating free-air temperature range unless otherwise noted(1)

		MIN	NOM	MAX	UNIT
Supply voltage, V_{CC}		4.5		5.5	V
Voltage at any bus terminal (separately or common mode) , V_I		–7		12	V
High-level input voltage (D, DE, or $\overline{RE}$ inputs), V_{IH}		2		V_{CC}	V
Low-level input voltage (D, DE, or $\overline{RE}$ inputs), V_{IL}		0		0.8	V
Differential input voltage, V_{ID}		–12		12	V
Output current, I_O	Driver	–60		60	mA
	Receiver	–8		8	
Differential load resistance, R_L		54	60		Ω
Signaling rate, $1/t_{UI}$	SN65HVD3082E, SN75HVD3082E			0.2	Mbps
	SN65HVD3085E			1	
	SN65HVD3088E			20	
Operating free-air temperature, T_A	SN65HVD3082E (D package)	–40		105	°C
	SN65HVD3082E (DGK and P packages), SN65HVD3085E, SN65HVD3088E	–40		85	
	SN75HVD3082E	0		70	
Junction temperature, T_J		–40		130	°C

(1) The algebraic convention, in which the least positive (most negative) limit is designated as minimum is used in this data sheet.

6.4 Thermal Information

THERMAL METRIC(1)		SN65HVD3085E, SN65HVD3088E		SN65HVD3088E	UNIT
		D (SOIC)	DGK (VSSOP)	P (PDIP)	
		8 PINS	8 PINS	8 PINS	
$R_{\theta JA}$	Junction-to-ambient thermal resistance	130	180	70	°C/W
$R_{\theta JC(top)}$	Junction-to-case (top) thermal resistance	80	66	80	°C/W
$R_{\theta JB}$	Junction-to-board thermal resistance	55	110	40	°C/W
ψ_{JT}	Junction-to-top characterization parameter	7.9	4.6	17.6	°C/W
ψ_{JB}	Junction-to-board characterization parameter	47	73.1	28.3	°C/W

(1) For more information about traditional and new thermal metrics, see the *Semiconductor and IC Package Thermal Metrics* application report.

6.5 Thermal Information

THERMAL METRIC(1)		SN65HVD3082E, SN75HVD3082E		SN65HVD3082E	UNIT
		D (SOIC)	DGK (VSSOP)	P (PDIP)	
		8 PINS	8 PINS	8 PINS	
$R_{\theta JA}$	Junction-to-ambient thermal resistance	114.4	142.2	88.1	°C/W
$R_{\theta JC(top)}$	Junction-to-case (top) thermal resistance	55.1	35.8	65.9	°C/W
$R_{\theta JB}$	Junction-to-board thermal resistance	61.6	75.6	69.0	°C/W
ψ_{JT}	Junction-to-top characterization parameter	8.8	0.8	35.2	°C/W
ψ_{JB}	Junction-to-board characterization parameter	60.8	74.8	64.3	°C/W

(1) For more information about traditional and new thermal metrics, see the *Semiconductor and IC Package Thermal Metrics* application report.

Copyright © 2022 Texas Instruments Incorporated

6.6 Electrical Characteristics: Driver

over operating free-air temperature range (unless otherwise noted)

PARAMETER		TEST CONDITIONS	MIN	TYP(1)	MAX	UNIT
$\|V_{OD}\|$	Differential output voltage	I_O = 0, No Load	3	4.3		V
		R_L = 54 Ω (see 图 7-1)	1.5	2.3		
		R_L = 100 Ω	2			
		V_{TEST} = –7 V to 12 V (see 图 7-2)	1.5			
$\Delta\|V_{OD}\|$	Change in magnitude of differential output voltage	See 图 7-1 and 图 7-2	–0.2	0	0.2	V
$V_{OC(SS)}$	Steady-state common-mode output voltage	See 图 7-3	1	2.6	3	V
$\Delta V_{OC(SS)}$	Change in steady-state common-mode output voltage		–0.1	0	0.1	
$V_{OC(PP)}$	Peak-to-peak common-mode output voltage	See 图 7-3		500		mV
I_{OZ}	High-impedance output current	See receiver input currents in Electrical Characteristics: Receiver				
I_I	Input current	D, DE	–100		100	μA
I_{OS}	Short-circuit output current	−7 V ≤ V_O ≤ 12 V (see 图 7-7)	–250		250	mA

(1) All typical values are at 25°C and with a 5-V supply.

6.7 Electrical Characteristics: Receiver

over operating free-air temperature range (unless otherwise noted)

PARAMETER		TEST CONDITIONS	MIN	TYP(1)	MAX	UNIT
V_{IT+}	Positive-going differential input threshold voltage	I_O = –8 mA		–85	–10	mV
V_{IT-}	Negative-going differential input threshold voltage	I_O = 8 mA	–200	–115		mV
V_{hys}	Hysteresis voltage (V_{IT+} – V_{IT-})			30		mV
V_{OH}	High-level output voltage	V_{ID} = 200 mV, I_{OH} = –8 mA (see 图 7-8)	4	4.6		V
V_{OL}	Low-level output voltage	V_{ID} = –200 mV, I_O = 8 mA (see 图 7-8)		0.15	0.4	V
I_{OZ}	High-impedance-state output current	V_O = 0 or V_{CC}, $\overline{RE}$ = V_{CC}	–1		1	μA
I_I	Bus input current	V_{IH} = 12 V, V_{CC} = 5 V		0.04	0.1	mA
		V_{IH} = 12 V, V_{CC} = 0 V		0.06	0.125	
		V_{IH} = –7 V, V_{CC} = 5 V	–0.1	–0.04		
		V_{IH} = –7 V, V_{CC} = 0 V	–0.05	–0.03		
I_{IH}	High-level input current, ($\overline{RE}$)	V_{IH} = 2 V	–60	–30		μA
I_{IL}	Low-level input current, ($\overline{RE}$)	V_{IL} = 0.8 V	–60	–30		μA
C_{diff}	Differential input capacitance	V_I = 0.4 sin (4E6 π t) + 0.5 V, DE at 0 V		7		pF

(1) All typical values are at 25°C and with a 5-V supply.

Copyright © 2022 Texas Instruments Incorporated

6.8 Electrical Characteristics

over operating free-air temperature range (unless otherwise noted)

PARAMETER		TEST CONDITIONS		MIN	TYP(1)	MAX	UNIT
I_{CC}	Driver and receiver enabled	D at V_{CC} or open, DE at V_{CC}, $\overline{RE}$ at 0 V, No load			425	900	µA
	Driver enabled, receiver disabled	D at V_{CC} or open, DE at V_{CC}, $\overline{RE}$ at V_{CC}, No load			330	600	µA
	Receiver enabled, driver disabled	D at V_{CC} or open, DE at 0 V, $\overline{RE}$ at 0 V, No load			300	600	µA
	Driver and receiver disabled	D at V_{CC} or open, DE at 0 V, $\overline{RE}$ at V_{CC}			0.001	2	µA
$P_{(AVG)}$	Average power dissipation	Input to D is a 50% duty cycle square wave at max specified signal rate R_L = 54 Ω V_{CC} = 5.5 V, T_J = 130°C	ALL HVD3082E			203	mW
			ALL HVD3085E			205	
			ALL HVD3088E			276	

(1) All typical values are at 25°C and with a 5-V supply.

6.9 Switching Characteristics: Driver

over operating free-air temperature range (unless otherwise noted)

PARAMETER		TEST CONDITIONS		MIN	TYP	MAX	UNIT
t_{PLH} t_{PHL}	Propagation delay time, low-to-high-level output Propagation delay time, high-to-low-level output	R_L = 54 Ω, C_L = 50 pF (see 图 7-4)	HVD3082E		700	1300	ns
			HVD3085E		150	500	
			HVD3088E		12	20	
t_r t_f	Differential output signal rise time Differential output signal fall time	R_L = 54 Ω, C_L = 50 pF (see 图 7-4)	HVD3082E	500	900	1500	ns
			HVD3085E		200	300	
			HVD3088E		7	15	
$t_{sk(p)}$	Pulse skew ($\lvert t_{PHL} - t_{PLH} \rvert$)	R_L = 54 Ω, C_L = 50 pF (see 图 7-4)	HVD3082E		20	200	ns
			HVD3085E		5	50	
			HVD3088E		1.4	2	
t_{PZH} t_{PZL}	Propagation delay time, high-impedance-to-high-level output Propagation delay time, high-impedance-to-low-level output	R_L = 110 Ω, $\overline{RE}$ at 0 V (see 图 7-5 and 图 7-6)	HVD3082E		2500	7000	ns
			HVD3085E		1000	2500	
			HVD3088E		13	30	
t_{PHZ} t_{PLZ}	Propagation delay time, high-level-to-high-impedance output Propagation delay time, low-level-to-high-impedance output	R_L = 110 Ω, $\overline{RE}$ at 0 V (see 图 7-5 and 图 7-6)	HVD3082E		80	200	ns
			HVD3085E		60	100	
			HVD3088E		12	30	
$t_{PZH(SHDN)}$ $t_{PZL(SHDN)}$	Propagation delay time, shutdown-to-high-level output Propagation delay time, shutdown-to-low-level output	R_L = 110 Ω, $\overline{RE}$ at V_{CC} (see 图 7-5)	HVD3082E		3500	7000	ns
			HVD3085E		2500	4500	
			HVD3088E		1600	2600	

Copyright © 2022 Texas Instruments Incorporated

6.10 Switching Characteristics

over operating free-air temperature range (unless otherwise noted)

PARAMETER		TEST CONDITIONS		MIN	TYP	MAX	UNIT
t_{PLH}	Propagation delay time, low-to-high-level output	C_L = 15 pF (see 图 7-9)	HVD3082E HVD3085E		75	200	ns
			HVD3086E			100	
t_{PHL}	Propagation delay time, high-to-low-level output		HVD3082E HVD3085E		79	200	ns
			HVD3088E			100	
$t_{sk(p)}$	Pulse skew ($\|t_{PHL} - t_{PLH}\|$)		HVD3082E HVD3085E		4	30	ns
			HVD3088E			10	
t_r	Output signal rise time	V_{ID} = –1.5 V to 1.5 V, C_L = 15 pF (see 图 7-9)			1.5	3	ns
t_f	Output signal fall time				1.8	3	
t_{PZH}	Output enable time to high level	C_L = 15 pF, DE at 3 V (see 图 7-10 and 图 7-11)	HVD3082E HVD3085E		5	50	ns
			HVD3088E			30	
t_{PZL}	Output enable time to low level		HVD3082E HVD3085E		10	50	ns
			HVD3088E			30	
t_{PHZ}	Output enable time from high level		HVD3082E HVD3085E		5	50	ns
			HVD3088E			30	
t_{PLZ}	Output disable time from low level		HVD3082E HVD3085E		8	50	ns
			HVD3088E			30	
$t_{PZH(SHDN)}$	Propagation delay time, shutdown-to-high-level output	C_L = 15 pF, DE at 0 V, (see 图 7-12)			1600	3500	ns
$t_{PZL(SHDN)}$	Propagation delay time, shutdown-to-low-level output				1700	3500	

Copyright © 2022 Texas Instruments Incorporated

6.11 Typical Characteristics

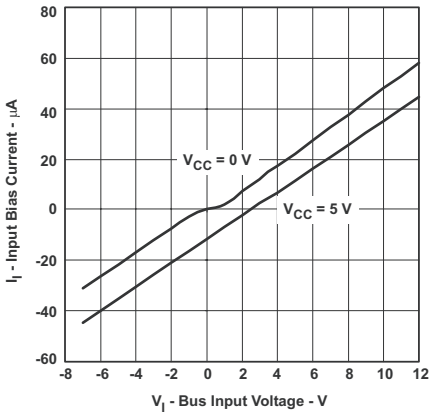

图 6-1. Bus Input Current versus Bus Input Voltage

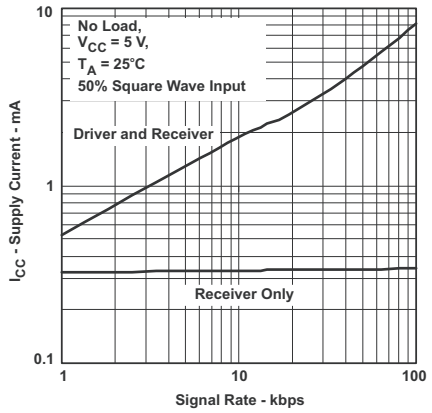

图 6-2. SN65HVD3082E RMS Supply Current versus Signaling Rate

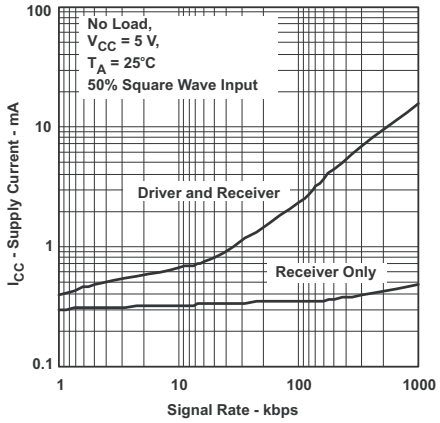

图 6-3. SN65HVD3085E RMS Supply Current versus Signaling Rate

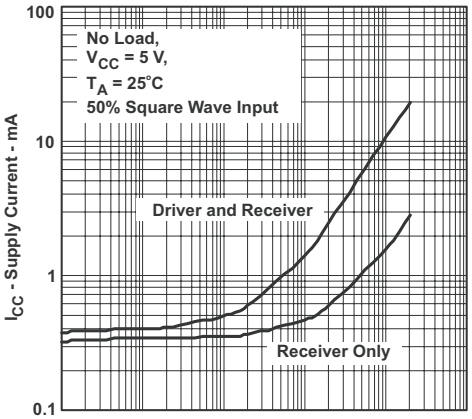

图 6-4. SN65HVD3088E RMS Supply Current versus Signal Rate

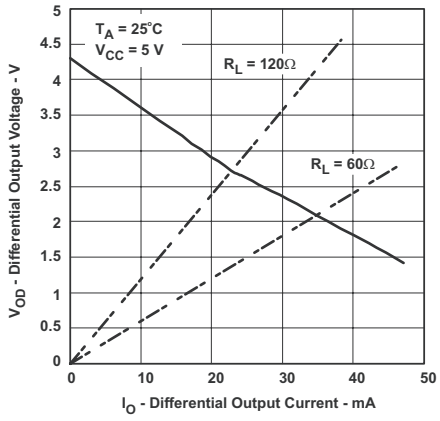

图 6-5. Driver Differential Output Voltage versus Driver Output Current

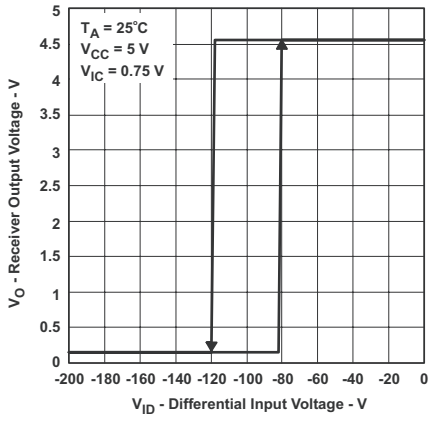

图 6-6. Receiver Output Voltage versus Differential Input Voltage

Copyright © 2022 Texas Instruments Incorporated

6.11 Typical Characteristics (continued)

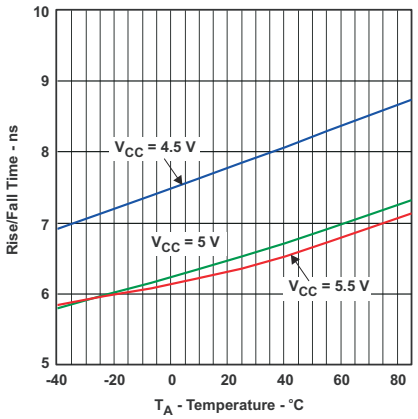

图 6-7. SN65HVD3088E Driver Rise and Fall Time versus Temperature

Copyright © 2022 Texas Instruments Incorporated

7 Parameter Measurement Information

Test load capacitance includes probe and jig capacitance (unless otherwise specified). Signal generator characteristics: rise and fall time < 6 ns, pulse rate 100 kHz, 50% duty cycle. Z_O = 50 Ω (unless otherwise specified).

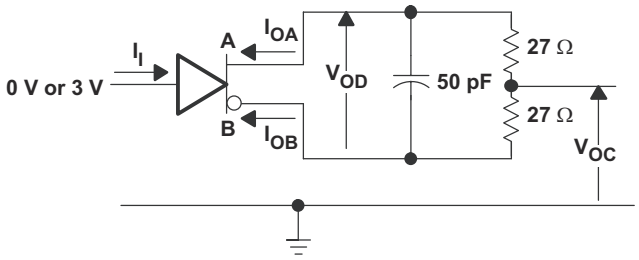

图 7-1. Driver Test Circuit, V_{OD} and V_{OC} Without Common-Mode Loading

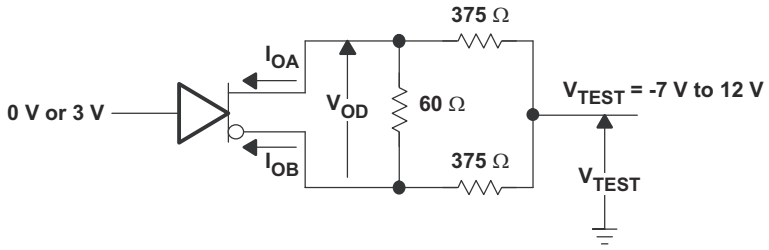

图 7-2. Driver Test Circuit, V_{OD} With Common-Mode Loading

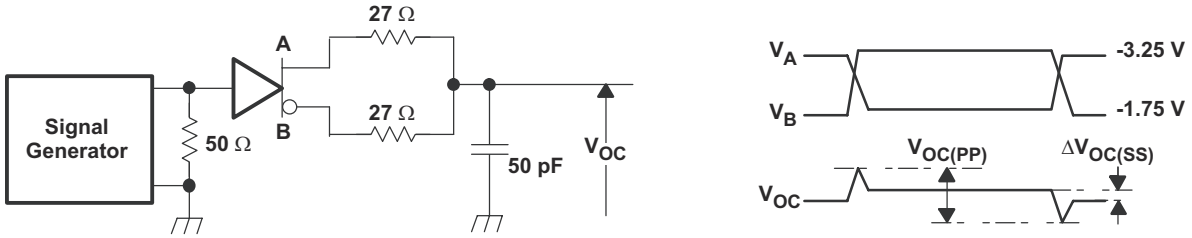

图 7-3. Driver V_{OC} Test Circuit and Waveforms

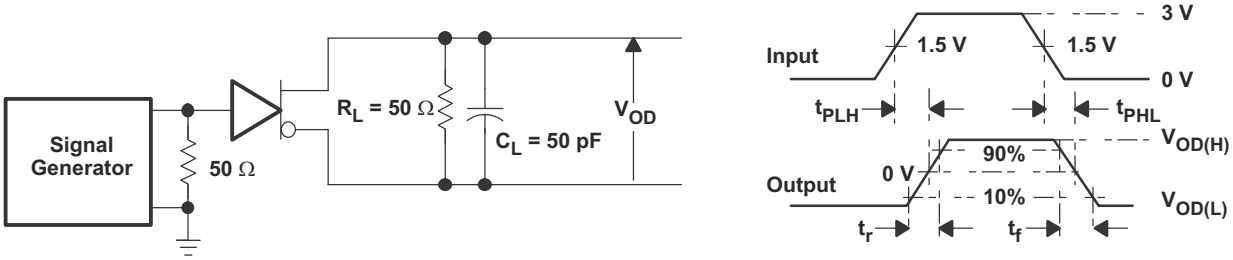

图 7-4. Driver Switching Test Circuit and Waveforms

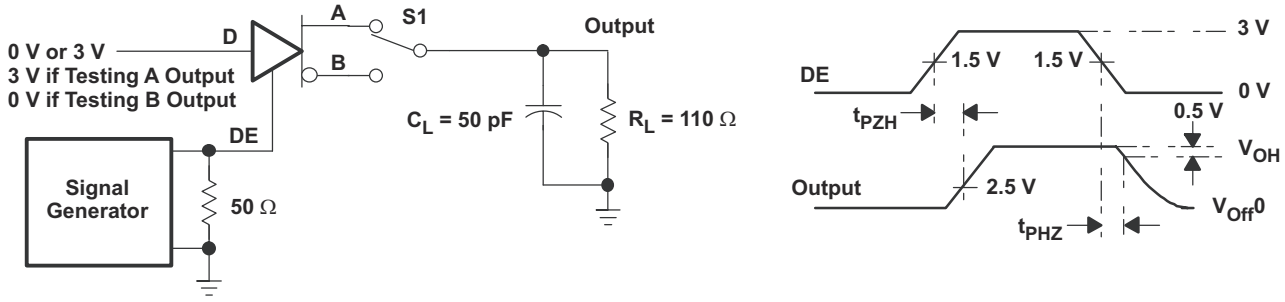

图 7-5. Driver Enable and Disable Test Circuit and Waveforms, High Output

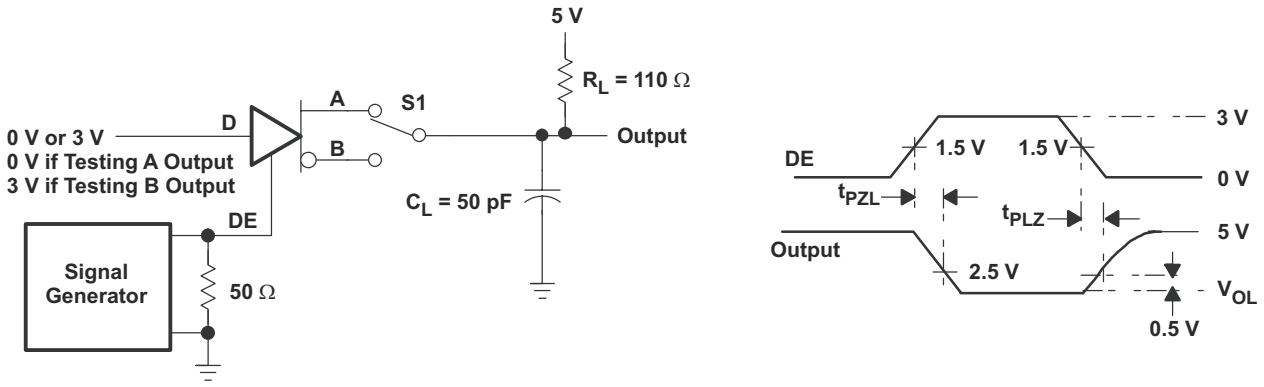

图 7-6. Driver Enable and Disable Test Circuit and Waveforms, Low Output

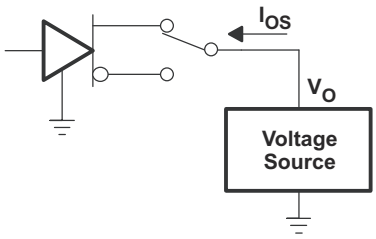

图 7-7. Driver Short-Circuit

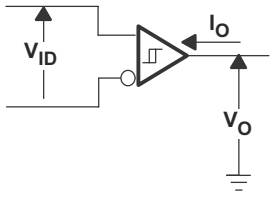

图 7-8. Receiver Switching Test Circuit and Waveforms

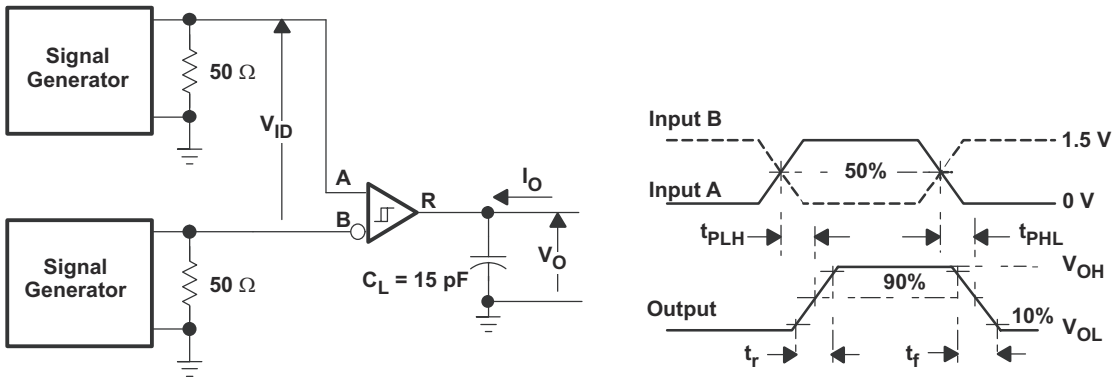

图 7-9. Receiver Switching Test Circuit and Waveforms

Copyright © 2022 Texas Instruments Incorporated

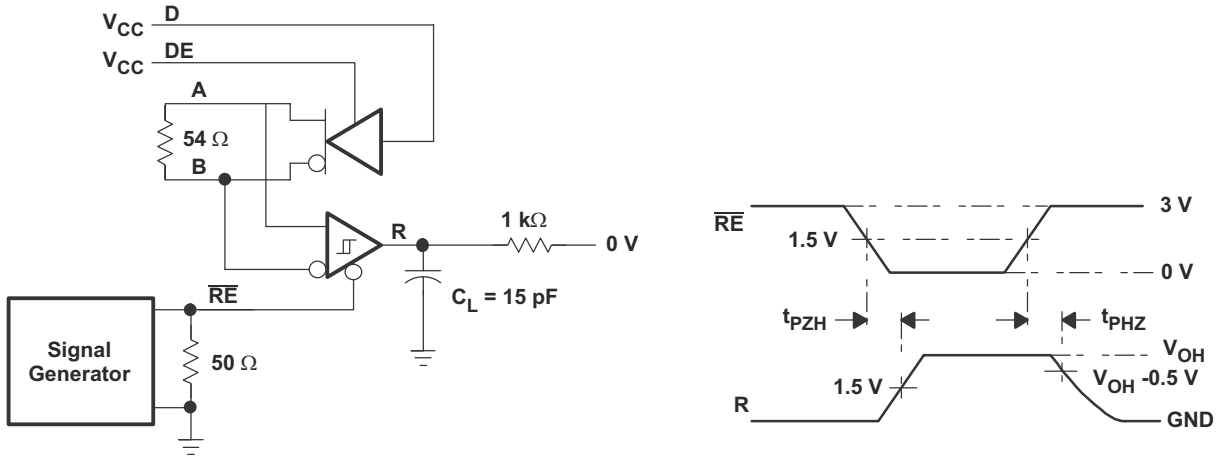

图 7-10. Receiver Enable and Disable Test Circuit and Waveforms, Data Output High

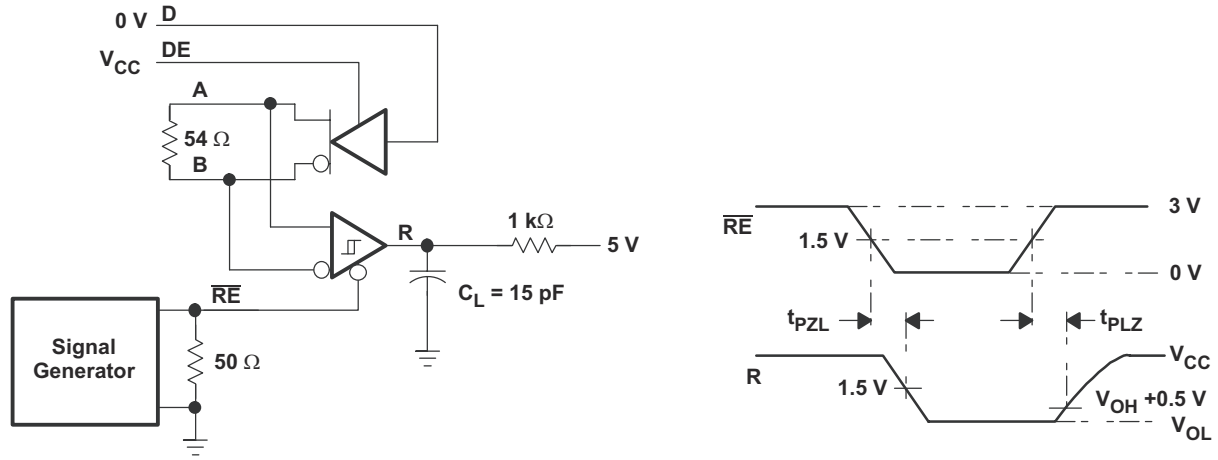

图 7-11. Receiver Enable and Disable Test Circuit and Waveforms, Data Output Low

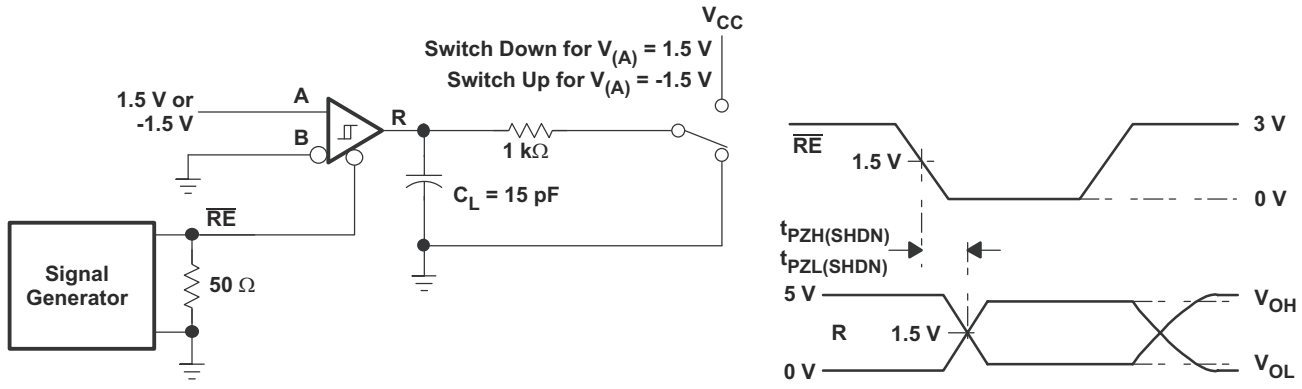

图 7-12. Receiver Enable From Shutdown Test Circuit and Waveforms

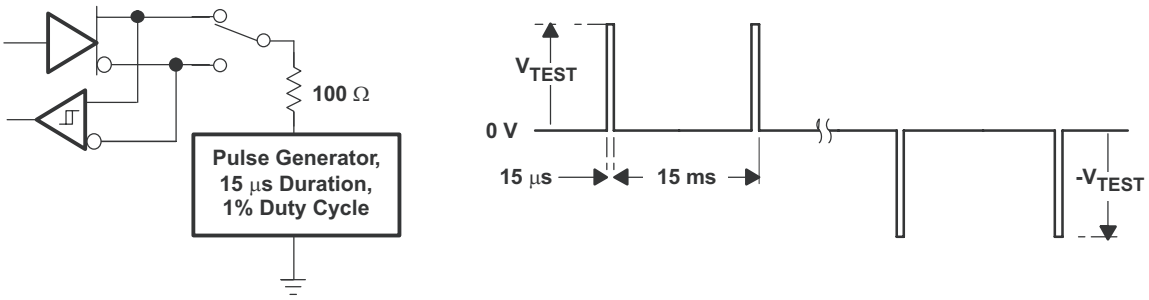

图 7-13. Test Circuit and Waveforms, Transient Overvoltage Test

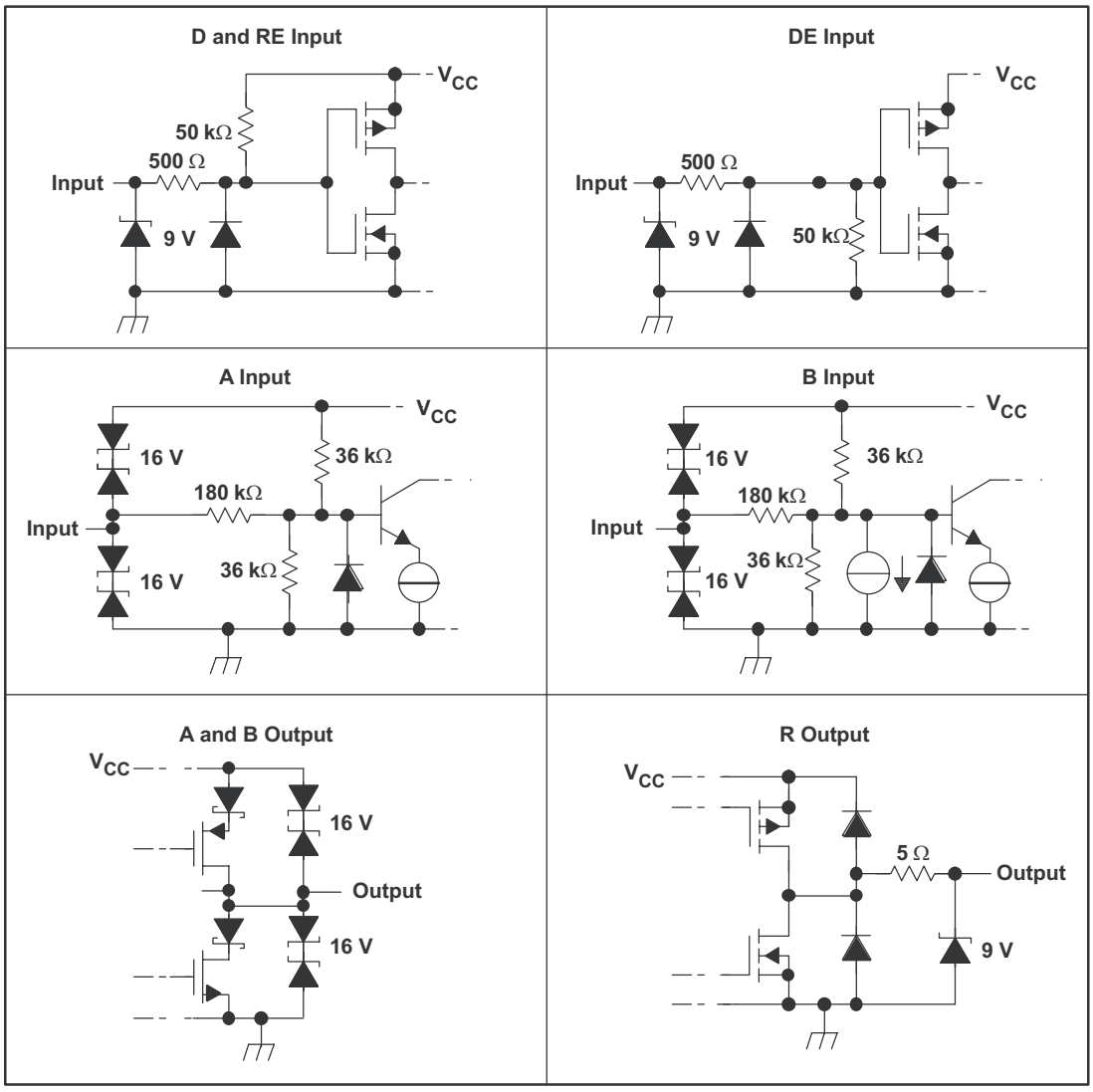

图 7-14. Equivalent Input and Output Schematic Diagrams

Copyright © 2022 Texas Instruments Incorporated

8 Detailed Description

8.1 Overview

The SNx5HVD308xE family of half-duplex RS-485 transceivers is suitable for data transmission at rates up to 200 kbps (for SN65HVD3082E and SN75HVD3082E), 1 Mbps (for SN65HVD3085E), or 20 Mbps (for SN65HVD3088E) over controlled-impedance transmission media (such as twisted-pair cabling). Up to 256 units of SNx5HVD308xE may share a common RS-485 bus due to the family’s low bus input currents. The devices also feature a high degree of ESD protection and typical standby current consumption of 1 nA.

8.2 Functional Block Diagram

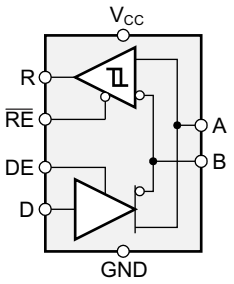

8.3 Feature Description

The SNx5HVD308xE provides internal biasing of the receiver input thresholds for open-circuit, bus-idle, or short-circuit failsafe conditions. It features a typical hysteresis of 30 mV in order to improve noise immunity. Internal ESD protection circuits protect the transceiver bus terminals against ±15-kV Human Body Model (HBM) electrostatic discharges.

The devices protect themselves against damage due to overtemperature conditions through use a of a thermal shutdown feature. Thermal shutdown is entered at 165°C (nominal) and causes the device to enter a low-power state with high-impedance outputs.

8.4 Device Functional Modes

When the driver enable pin, DE, is logic high, the differential outputs A and B follow the logic states at data input D. A logic high at D causes A to turn high and B to turn low. In this case the differential output voltage defined as $V_{OD} = V_A - V_B$ is positive. When D is low, the output states reverse, B turns high, A becomes low, and V_{OD} is negative.

When DE is low, both outputs turn high-impedance. In this condition the logic state at D is irrelevant. The DE pin has an internal pull-down resistor to ground, thus when left open the driver is disabled (high-impedance) by default. The D pin has an internal pull-up resistor to V_{CC}, thus, when left open while the driver is enabled, output A turns high and B turns low.

表 8-1. Driver Function Table

INPUT	ENABLE(1)	OUTPUTS(1)		FUNCTION
D	DE	A	B	
H	H	H	L	Actively drive bus High
L	H	L	H	Actively drive bus Low
X	L	Z	Z	Driver disabled
X	OPEN	Z	Z	Driver disabled by default
OPEN	H	H	L	Actively drive bus High by default

(1) H = high level, L = low level, Z = high impedance, X = irrelevant

When the receiver enable pin, $\overline{RE}$, is logic low, the receiver is enabled. When the differential input voltage defined as $V_{ID} = V_A - V_B$ is positive and higher than the positive input threshold, V_{IT+}, the receiver output, R, turns high. When V_{ID} is negative and lower than the negative input threshold, V_{IT-}, the receiver output, R, turns low. If V_{ID} is between V_{IT+} and V_{IT-} the output is indeterminate.

Copyright © 2022 Texas Instruments Incorporated

When $\overline{RE}$ is logic high or left open, the receiver output is high-impedance and the magnitude and polarity of V_{ID} are irrelevant. Internal biasing of the receiver inputs causes the output to go failsafe-high when the transceiver is disconnected from the bus (open-circuit), the bus lines are shorted (short-circuit), or the bus is not actively driven (idle bus).

表 8-2. Receiver Function Table

DIFFERENTIAL INPUT	ENABLE (1)	OUTPUT(1)	FUNCTION
$V_{ID} = V_A - V_B$	$\overline{RE}$	R	
$V_{IT+} < V_{ID}$	L	H	Receive valid bus High
$V_{IT-} < V_{ID} < V_{IT+}$	L	?	Indeterminate bus state
$V_{ID} < V_{IT-}$	L	L	Receive valid bus Low
X	H	Z	Receiver disabled
X	OPEN	Z	Receiver disabled by default
Open-circuit bus	L	H	Fail-safe high output
Short-circuit bus	L	H	Fail-safe high output
Idle (terminated) bus	L	H	Fail-safe high output

(1) H = high level, L = low level, Z = high impedance, X = irrelevant, ? = indeterminate

Copyright © 2022 Texas Instruments Incorporated

9 Application and Implementation

Note

以下应用部分中的信息不属于 TI 器件规格的范围，TI 不担保其准确性和完整性。TI 的客 户应负责确定器件是否适用于其应用。客户应验证并测试其设计，以确保系统功能。

9.1 Application Information

The SNx5HVD308xE devices are half-duplex RS-485 transceivers commonly used for asynchronous data transmissions. The driver and receiver enable pins allow for the configuration of different operating modes.

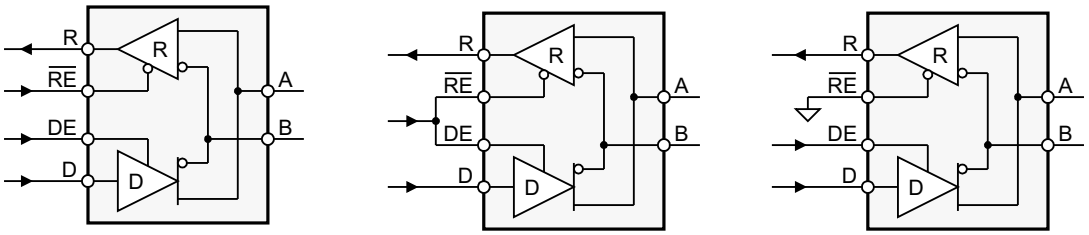

图 9-1. Half-Duplex Transceiver Configurations

Using independent enable lines provides the most flexible control as it allows for the driver and the receiver to be turned on and off individually. While this configuration requires two control lines, it allows for selective listening into the bus traffic whether the driver is transmitting data or not.

Combining the enable signals simplifies the interface to the controller by forming a single direction-control signal. In this configuration, the transceiver operates as a driver when the direction-control line is high and as a receiver when the direction-control line is low.

Additionally, only one line is required when connecting the receiver-enable input to ground and controlling only the driver-enable input. In this configuration, a node not only receives the data from the bus, but also the data it sends and can verify that the correct data have been transmitted.

9.2 Typical Application

An RS-485 bus consists of multiple transceivers connecting in parallel to a bus cable. To eliminate line reflections, each cable end is terminated with a termination resistor, R_T, whose value matches the characteristic impedance, Z_0, of the cable. This method, known as parallel termination, allows for higher data rates over longer cable length.

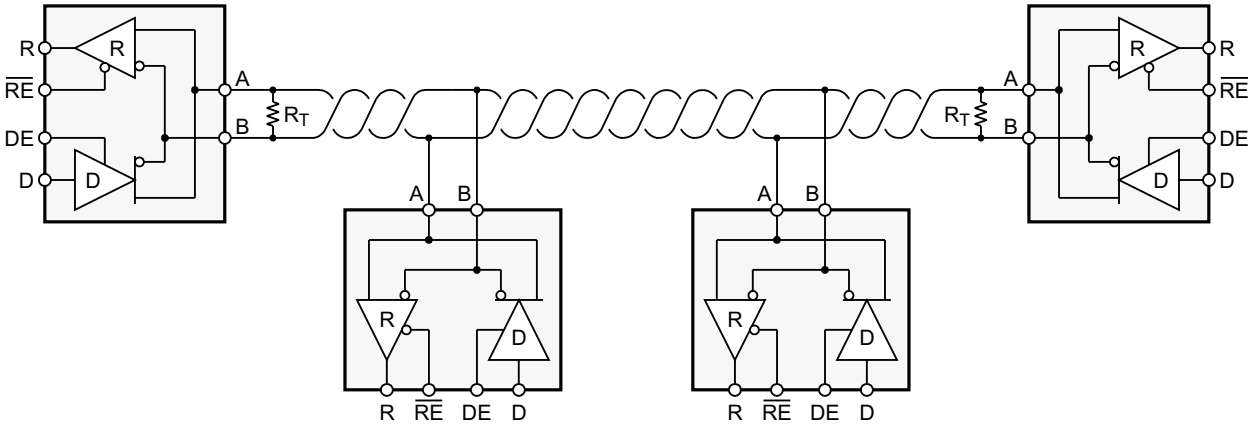

图 9-2. Typical Application Circuit

9.2.1 Design Requirements

RS-485 is a robust electrical standard suitable for long-distance networking that may be used in a wide range of applications with varying requirements, such as distance, data rate, and number of nodes.

9.2.1.1 Data Rate and Bus Length

There is an inverse relationship between data rate and bus length, meaning the higher the data rate, the shorter the cable length; and conversely, the lower the data rate, the longer the cable may be without introducing data errors. While most RS-485 systems use data rates between 10 kbps and 100 kbps, some applications require data rates up to 250 kbps at distances of 4,000 feet and longer. Longer distances are possible by allowing for small signal jitter of up to 5 or 10%.

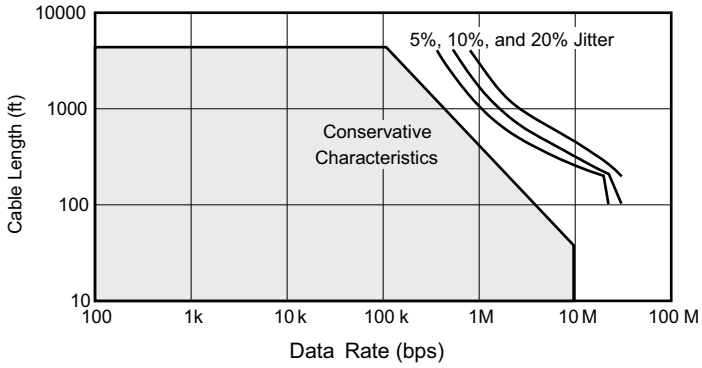

图 9-3. Cable Length vs Data Rate Characteristic

9.2.1.2 Stub Length

When connecting a node to the bus, the distance between the transceiver inputs and the cable trunk, known as the stub, must be as short as possible. Stubs present a non-terminated piece of bus line which can introduce reflections as the length of the stub increases. As a general guideline, the electrical length, or round-trip delay, of a stub must be less than one-tenth of the rise time of the driver, thus giving a maximum physical stub length as shown in 方程式 1.

$$L_{stub} \leqslant 0.1 \times t_r \times v \times c \quad (1)$$

where:

- t_r is the 10/90 rise time of the driver
- c is the speed of light (3×10^8 m/s)
- v is the signal velocity of the cable or trace as a factor of c

9.2.1.3 Bus Loading

The RS-485 standard specifies that a compliant driver must be able to driver 32 unit loads (UL), where 1 unit load represents a load impedance of approximately 12 kΩ. Because the SNx5HVD308xE is a 1/8 UL transceiver, it is possible to connect up to 256 receivers to the bus.

Copyright © 2022 Texas Instruments Incorporated

9.2.1.4 Receiver Failsafe

The differential receiver is failsafe to invalid bus states caused by:

- open bus conditions such as a disconnected connector,
- shorted bus conditions such as cable damage shorting the twisted-pair together, or
- idle bus conditions that occur when no driver on the bus is actively driving

In any of these cases, the differential receiver outputs a failsafe logic High state, so that the output of the receiver is not indeterminate.

Receiver failsafe is accomplished by offsetting the receiver thresholds so that the *input indeterminate* range does not include zero volts differential. To comply with the RS-422 and RS-485 standards, the receiver output must output a High when the differential input V_{ID} is more positive than +200 mV, and must output a Low when the V_{ID} is more negative than –200 mV. The receiver parameters which determine the failsafe performance are V_{IT+} and V_{IT-} and V_{HYS}. As seen in the table, differential signals more negative than –200 mV will always cause a Low receiver output. Similarly, differential signals more positive than +200 mV will always cause a High receiver output.

When the differential input signal is close to zero, it will still be above the V_{IT+} threshold, and the receiver output is High. Only when the differential input is more negative than V_{IT-} will the receiver output transition to a Low state. So, the noise immunity of the receiver inputs during a bus fault condition includes the receiver hysteresis value V_{HYS} (the separation between V_{IT+} and V_{IT-}) as well as the value of V_{IT+}.

9.2.2 Detailed Design Procedure

In order to protect bus nodes against high-energy transients, the implementation of external transient protection devices is necessary.

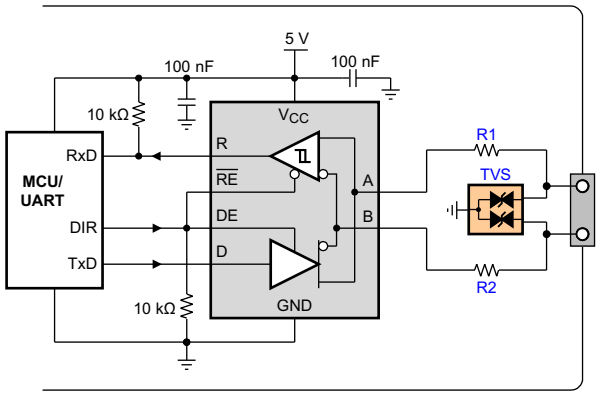

Copyright © 2017, Texas Instruments Incorporated

图 9-4. Transient Protection Against ESD, EFT, and Surge Transients

图 9-4 suggests a protection circuit against 10-kV ESD (IEC 61000-4-2), 4-kV EFT (IEC 61000-4-4), and 1-kV surge (IEC 61000-4-5) transients. 表 9-1 shows the associated Bill of Materials.

表 9-1. Bill of Materials

DEVICE	FUNCTION	ORDER NUMBER	MANUFACTURER
XCVR	RS-485 Transceiver	SNx5HVD308xE	TI
R1, R2	10-Ω, Pulse-Proof Thick-Film Resistor	CRCW060310RJNEAHP	Vishay
TVS	Bidirectional 400-W Transient Suppressor	CDSOT23-SM712	Bourns

9.2.2.1 Power Usage in an RS-485 Transceiver

Power consumption is a concern in many applications. Power supply current is delivered to the bus load as well as to the transceiver circuitry. For a typical RS-485 bus configuration, the load that an active driver must drive consists of all of the receiving nodes, plus the termination resistors at each end of the bus.

The load presented by the receiving nodes depends on the input impedance of the receiver. The TIA/EIA-485A standard defines a unit load as allowing up to 1 mA. With up to 32 unit loads allowed on the bus, the total current supplied to all receivers can be as high as 32 mA. The HVD308xE is rated as a 1/8 unit load device. As shown in 图 6-1, the bus input current is less than 0.125 mA, allowing up to 256 nodes on a single bus.

The current in the termination resistors depends on the differential bus voltage. The standard requires active drivers to produce at least 1.5 V of differential signal. For a bus terminated with one standard 120-Ω resistor at each end, this sums to 25 mA differential output current whenever the bus is active. Typically the HVD308xE can drive more than 25-mA to a 60-Ω load, resulting in a differential output voltage higher than the minimum required by the standard (see 图 6-3).

Overall, the total load current can be 60 mA to a loaded RS-485 bus. This is in addition to the current required by the transceiver itself; the HVD308xE circuitry requires only about 0.4 mA with both driver and receiver enabled, and only 0.3 mA with either the driver enabled or with the receiver enabled. In low-power shutdown mode, neither the driver nor receiver is active, and the supply current is low.

Supply current increases with signaling rate primarily due to the totem pole outputs of the driver (see 图 6-2). When these outputs change state, there is a moment when both the high-side and low-side output transistors are conducting and this creates a short spike in the supply current. As the frequency of state changes increases, more power is used.

9.2.2.2 Low-Power Shutdown Mode

When both the driver and receiver are disabled (DE low and $\overline{RE}$ high) the device is in shutdown mode. If the enable inputs are in this state for less than 60 ns, the device does not enter shutdown mode. This guards against inadvertently entering shutdown mode during driver or receiver enabling. Only when the enable inputs are held in this state for 300 ns or more, the device is assured to be in shutdown mode. In this low-power shutdown mode, most internal circuitry is powered down, and the supply current is typically 1 nA. When either the driver or the receiver is re-enabled, the internal circuitry becomes active.

If only the driver is re-enabled (DE transitions to high) the driver outputs are driven according to the D input after the enable times given by $t_{PZH(SHDN)}$ and $t_{PZL(SHDN)}$ in the driver switching characteristics. If the D input is open when the driver is enabled, the driver outputs defaults to A high and B low, in accordance with the driver failsafe feature.

If only the receiver is re-enabled (RE transitions to low) the receiver output is driven according to the state of the bus inputs (A and B) after the enable times given by $t_{PZH(SHDN)}$ and $t_{PZL(SHDN)}$ in the receiver switching characteristics. If there is no valid state on the bus the receiver responds as described in the failsafe operation section.

If both the receiver and driver are re-enabled simultaneously, the receiver output is driven according to the state of the bus inputs (A and B) and the driver output is driven according to the D input.

Note

The state of the active driver affects the inputs to the receiver. Therefore, the receiver outputs are valid as soon as the driver outputs are valid.

Copyright © 2022 Texas Instruments Incorporated

10 Power Supply Recommendations

To ensure reliable operation at all data rates and supply voltages, each supply must be decoupled with a 100-nF ceramic capacitor located as close to the supply pins as possible. This helps to reduce supply voltage ripple present on the outputs of switched-mode power supplies and also helps to compensate for the resistance and inductance of the PCB power planes.

11 Layout

11.1 Layout Guidelines

Robust and reliable bus node design often requires the use of external transient protection devices in order to protect against EFT and surge transients that may occur in industrial environments. Because these transients have a wide frequency bandwidth (from approximately 3 MHz to 3 GHz), high-frequency layout techniques must be applied during PCB design.

- Place the protection circuitry close to the bus connector to prevent noise transients from entering the board.
- Use V_{CC} and ground planes to provide low-inductance.

Note

High-frequency currents follow the path of least inductance and not the path of least impedance.

- Design the protection components into the direction of the signal path. Do not force the transients currents to divert from the signal path to reach the protection device.
- Apply 100-nF to 220-nF bypass capacitors as close as possible to the V_{CC} pins of transceiver, UART, and controller ICs on the board.
- Use at least two vias for V_{CC} and ground connections of bypass capacitors and protection devices to minimize effective via-inductance.
- Use 1-kΩ to 10-kΩ pullup or pulldown resistors for enable lines to limit noise currents in these lines during transient events.
- Insert series pulse-proof resistors into the A and B bus lines if the TVS clamping voltage is higher than the specified maximum voltage of the transceiver bus pins. These resistors limit the residual clamping current into the transceiver and prevent it from latching up.
- While pure TVS protection is sufficient for surge transients up to 1 kV, higher transients require metal-oxide varistors (MOVs) which reduce the transients to a few hundred volts of clamping voltage, and transient blocking units (TBUs) that limit transient current to 200 mA.

11.2 Layout Example

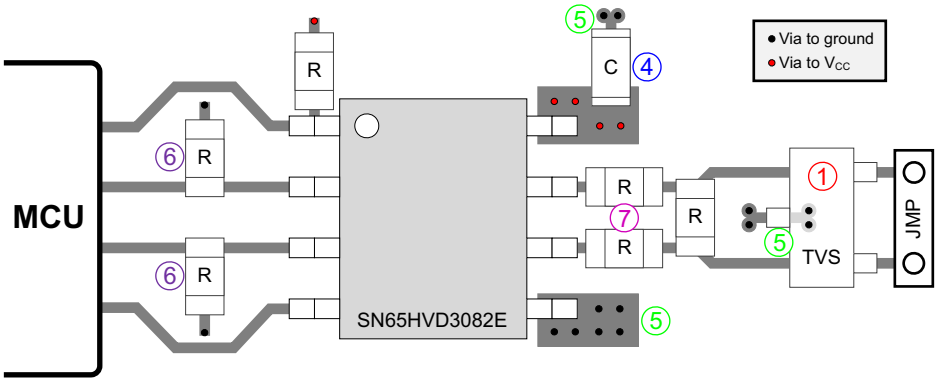

图 11-1. Layout Example

11.3 Thermal Considerations for IC Packages

θ_{JA} (Junction-to-Ambient Thermal Resistance) is defined as the difference in junction temperature to ambient temperature divided by the operating power.

θ_{JA} is **not** a constant and is a strong function of:

- the PCB design (50% variation)
- altitude (20% variation)
- device power (5% variation)

θ_{JA} can be used to compare the thermal performance of packages if the specific test conditions are defined and used. Standardized testing includes specification of PCB construction, test chamber volume, sensor locations, and the thermal characteristics of holding fixtures. θ_{JA} is often misused when it is used to calculate junction temperatures for other installations.

TI uses two test PCBs as defined by JEDEC specifications. The low-k board gives average in-use condition thermal performance and consists of a single trace layer 25-mm long and 2-oz thick copper. The high-k board gives best case in-use condition and consists of two 1-oz buried power planes with a single trace layer 25-mm long with 2-oz thick copper. A 4% to 50% difference in θ_{JA} can be measured between these two test cards.

θ_{JC} (Junction-to-Case Thermal Resistance) is defined as difference in junction temperature to case divided by the operating power. It is measured by putting the mounted package up against a copper block cold plate to force heat to flow from die, through the mold compound into the copper block.

θ_{JC} is a useful thermal characteristic when a heatsink is applied to package. It is NOT a useful characteristic to predict junction temperature as it provides pessimistic numbers if the case temperature is measured in a non-standard system and junction temperatures are backed out. It can be used with θ_{JB} in 1-dimensional thermal simulation of a package system.

θ_{JB} (Junction-to-Board Thermal Resistance) is defined to be the difference in the junction temperature and the PCB temperature at the center of the package (closest to the die) when the PCB is clamped in a cold-plate structure. θ_{JB} is only defined for the high-k test card.

θ_{JB} provides an overall thermal resistance between the die and the PCB. It includes a bit of the PCB thermal resistance (especially for BGAs with thermal balls) and can be used for simple 1-dimensional network analysis of package system (see 图 11-2).

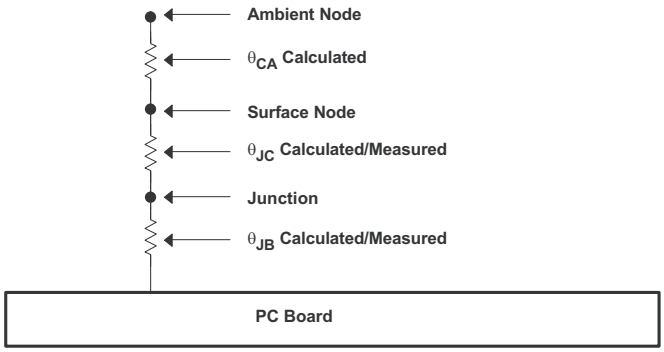

图 11-2. Thermal Resistance

Copyright © 2022 Texas Instruments Incorporated

12 Device and Documentation Support

12.1 Device Support

12.1.1 第三方产品免责声明

TI 发布的与第三方产品或服务有关的信息，不能构成与此类产品或服务或保修的适用性有关的认可，不能构成此类产品或服务单独或与任何 TI 产品或服务一起的表示或认可。

12.2 Related Links

The table below lists quick access links. Categories include technical documents, support and community resources, tools and software, and quick access to sample or buy.

表 12-1. Related Links

PARTS	PRODUCT FOLDER	SAMPLE & BUY	TECHNICAL DOCUMENTS	TOOLS & SOFTWARE	SUPPORT & COMMUNITY
SN65HVD3082E	Click here	Click here	Click here	Click here	Click here
SN75HVD3082E	Click here	Click here	Click here	Click here	Click here
SN65HVD3085E	Click here	Click here	Click here	Click here	Click here
SN65HVD3088E	Click here	Click here	Click here	Click here	Click here

12.3 接收文档更新通知

要接收文档更新通知，请导航至 ti.com 上的器件产品文件夹。点击 *订阅更新* 进行注册，即可每周接收产品信息更改摘要。有关更改的详细信息，请查看任何已修订文档中包含的修订历史记录。

12.4 支持资源

TI E2E™ 支持论坛是工程师的重要参考资料，可直接从专家获得快速、经过验证的解答和设计帮助。搜索现有解答或提出自己的问题可获得所需的快速设计帮助。

链接的内容由各个贡献者“按原样”提供。这些内容并不构成 TI 技术规范，并且不一定反映 TI 的观点；请参阅 TI 的《使用条款》。

12.5 Trademarks

TI E2E™ is a trademark of Texas Instruments.
所有商标均为其各自所有者的财产。

12.6 静电放电警告



静电放电 (ESD) 会损坏这个集成电路。德州仪器 (TI) 建议通过适当的预防措施处理所有集成电路。如果不遵守正确的处理和安装程序，可能会损坏集成电路。

ESD 的损坏小至导致微小的性能降级，大至整个器件故障。精密的集成电路可能更容易受到损坏，这是因为非常细微的参数更改都可能会导致器件与其发布的规格不相符。

12.7 术语表

TI 术语表　　本术语表列出并解释了术语、首字母缩略词和定义。

13 Mechanical, Packaging, and Orderable Information

The following pages include mechanical, packaging, and orderable information. This information is the most current data available for the designated devices. This data is subject to change without notice and revision of this document. For browser-based versions of this data sheet, refer to the left-hand navigation.

Copyright © 2022 Texas Instruments Incorporated

PACKAGING INFORMATION

Orderable Device	Status (1)	Package Type	Package Drawing	Pins	Package Qty	Eco Plan (2)	Lead finish/ Ball material (6)	MSL Peak Temp (3)	Op Temp (°C)	Device Marking (4/5)	Samples
SN65HVD3082ED	NRND	SOIC	D	8	75	RoHS & Green	NIPDAU	Level-1-260C-UNLIM	-40 to 85	VP3082	
SN65HVD3082EDG4	NRND	SOIC	D	8	75	RoHS & Green	NIPDAU	Level-1-260C-UNLIM	-40 to 85	VP3082	
SN65HVD3082EDGK	NRND	VSSOP	DGK	8	80	RoHS & Green	NIPDAU | NIPDAUAG	Level-1-260C-UNLIM	-40 to 85	NWN	
SN65HVD3082EDGKR	ACTIVE	VSSOP	DGK	8	2500	RoHS & Green	NIPDAU | SN | NIPDAUAG	Level-1-260C-UNLIM	-40 to 85	NWN	Samples
SN65HVD3082EDR	ACTIVE	SOIC	D	8	2500	RoHS & Green	NIPDAU	Level-1-260C-UNLIM	-40 to 85	VP3082	Samples
SN65HVD3082EDRG4	ACTIVE	SOIC	D	8	2500	RoHS & Green	NIPDAU	Level-1-260C-UNLIM	-40 to 85	VP3082	Samples
SN65HVD3082EP	ACTIVE	PDIP	P	8	50	RoHS & Green	NIPDAU	N / A for Pkg Type	-40 to 85	65HVD3082	Samples
SN65HVD3082EPE4	ACTIVE	PDIP	P	8	50	RoHS & Green	NIPDAU	N / A for Pkg Type	-40 to 85	65HVD3082	Samples
SN65HVD3085ED	ACTIVE	SOIC	D	8	75	RoHS & Green	NIPDAU	Level-1-260C-UNLIM	-40 to 85	VP3085	Samples
SN65HVD3085EDG4	ACTIVE	SOIC	D	8	75	RoHS & Green	NIPDAU	Level-1-260C-UNLIM	-40 to 85	VP3085	Samples
SN65HVD3085EDGK	ACTIVE	VSSOP	DGK	8	80	RoHS & Green	NIPDAU | NIPDAUAG	Level-1-260C-UNLIM	-40 to 85	NWK	Samples
SN65HVD3085EDGKR	ACTIVE	VSSOP	DGK	8	2500	RoHS & Green	NIPDAU | NIPDAUAG	Level-1-260C-UNLIM	-40 to 85	NWK	Samples
SN65HVD3085EDR	ACTIVE	SOIC	D	8	2500	RoHS & Green	NIPDAU	Level-1-260C-UNLIM	-40 to 85	VP3085	Samples
SN65HVD3088ED	ACTIVE	SOIC	D	8	75	RoHS & Green	NIPDAU	Level-1-260C-UNLIM	-40 to 85	VP3088	Samples
SN65HVD3088EDG4	ACTIVE	SOIC	D	8	75	RoHS & Green	NIPDAU	Level-1-260C-UNLIM	-40 to 85	VP3088	Samples
SN65HVD3088EDGK	ACTIVE	VSSOP	DGK	8	80	RoHS & Green	NIPDAU | NIPDAUAG	Level-1-260C-UNLIM	-40 to 85	NWH	Samples
SN65HVD3088EDGKG4	ACTIVE	VSSOP	DGK	8	80	RoHS & Green	NIPDAU	Level-1-260C-UNLIM	-40 to 85	NWH	Samples
SN65HVD3088EDGKR	ACTIVE	VSSOP	DGK	8	2500	RoHS & Green	NIPDAU | NIPDAUAG	Level-1-260C-UNLIM	-40 to 85	NWH	Samples
SN65HVD3088EDGKRG4	ACTIVE	VSSOP	DGK	8	2500	RoHS & Green	NIPDAU	Level-1-260C-UNLIM	-40 to 85	NWH	Samples
SN65HVD3088EDR	ACTIVE	SOIC	D	8	2500	RoHS & Green	NIPDAU	Level-1-260C-UNLIM	-40 to 85	VP3088	Samples
SN65HVD3088EDRG4	ACTIVE	SOIC	D	8	2500	RoHS & Green	NIPDAU	Level-1-260C-UNLIM	-40 to 85	VP3088	Samples

Orderable Device	Status (1)	Package Type	Package Drawing	Pins	Package Qty	Eco Plan (2)	Lead finish/ Ball material (6)	MSL Peak Temp (3)	Op Temp (°C)	Device Marking (4/5)	Samples
SN75HVD3082ED	NRND	SOIC	D	8	75	RoHS & Green	NIPDAU	Level-1-260C-UNLIM	0 to 70	VN3082	
SN75HVD3082EDG4	NRND	SOIC	D	8	75	RoHS & Green	NIPDAU	Level-1-260C-UNLIM	0 to 70	VN3082	
SN75HVD3082EDGK	NRND	VSSOP	DGK	8	80	RoHS & Green	NIPDAU	Level-1-260C-UNLIM	0 to 70	NWM	
SN75HVD3082EDGKR	ACTIVE	VSSOP	DGK	8	2500	RoHS & Green	Call TI | SN | NIPDAU	Level-1-260C-UNLIM	0 to 70	NWM	Samples
SN75HVD3082EDR	ACTIVE	SOIC	D	8	2500	RoHS & Green	NIPDAU	Level-1-260C-UNLIM	0 to 70	VN3082	Samples
SN75HVD3082EDRG4	ACTIVE	SOIC	D	8	2500	RoHS & Green	NIPDAU	Level-1-260C-UNLIM	0 to 70	VN3082	Samples
SN75HVD3082EP	ACTIVE	PDIP	P	8	50	RoHS & Green	NIPDAU	N / A for Pkg Type	0 to 70	75HVD3082	Samples

(1) The marketing status values are defined as follows:
ACTIVE: Product device recommended for new designs.
LIFEBUY: TI has announced that the device will be discontinued, and a lifetime-buy period is in effect.
NRND: Not recommended for new designs. Device is in production to support existing customers, but TI does not recommend using this part in a new design.
PREVIEW: Device has been announced but is not in production. Samples may or may not be available.
OBSOLETE: TI has discontinued the production of the device.

(2) **RoHS:** TI defines "RoHS" to mean semiconductor products that are compliant with the current EU RoHS requirements for all 10 RoHS substances, including the requirement that RoHS substance do not exceed 0.1% by weight in homogeneous materials. Where designed to be soldered at high temperatures, "RoHS" products are suitable for use in specified lead-free processes. TI may reference these types of products as "Pb-Free".
RoHS Exempt: TI defines "RoHS Exempt" to mean products that contain lead but are compliant with EU RoHS pursuant to a specific EU RoHS exemption.
Green: TI defines "Green" to mean the content of Chlorine (Cl) and Bromine (Br) based flame retardants meet JS709B low halogen requirements of <=1000ppm threshold. Antimony trioxide based flame retardants must also meet the <=1000ppm threshold requirement.

(3) MSL, Peak Temp. - The Moisture Sensitivity Level rating according to the JEDEC industry standard classifications, and peak solder temperature.

(4) There may be additional marking, which relates to the logo, the lot trace code information, or the environmental category on the device.

(5) Multiple Device Markings will be inside parentheses. Only one Device Marking contained in parentheses and separated by a "~" will appear on a device. If a line is indented then it is a continuation of the previous line and the two combined represent the entire Device Marking for that device.

(6) Lead finish/Ball material - Orderable Devices may have multiple material finish options. Finish options are separated by a vertical ruled line. Lead finish/Ball material values may wrap to two lines if the finish value exceeds the maximum column width.

Important Information and Disclaimer: The information provided on this page represents TI's knowledge and belief as of the date that it is provided. TI bases its knowledge and belief on information provided by third parties, and makes no representation or warranty as to the accuracy of such information. Efforts are underway to better integrate information from third parties. TI has taken and continues to take reasonable steps to provide representative and accurate information but may not have conducted destructive testing or chemical analysis on incoming materials and chemicals. TI and TI suppliers consider certain information to be proprietary, and thus CAS numbers and other limited information may not be available for release.

In no event shall TI's liability arising out of such information exceed the total purchase price of the TI part(s) at issue in this document sold by TI to Customer on an annual basis.

TAPE AND REEL INFORMATION

REEL DIMENSIONS

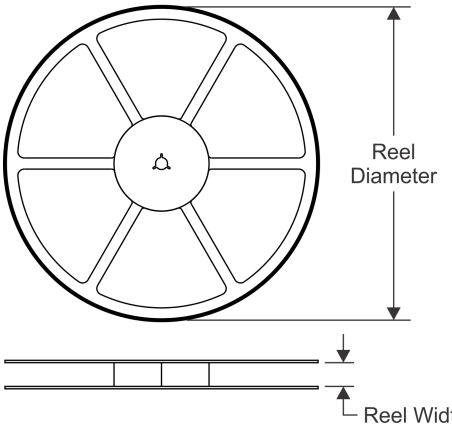

TAPE DIMENSIONS

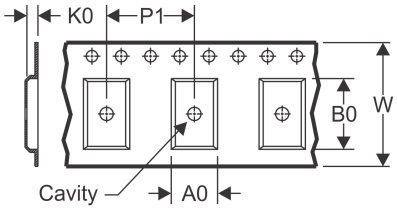

A0	Dimension designed to accommodate the component width
B0	Dimension designed to accommodate the component length
K0	Dimension designed to accommodate the component thickness
W	Overall width of the carrier tape
P1	Pitch between successive cavity centers

QUADRANT ASSIGNMENTS FOR PIN 1 ORIENTATION IN TAPE

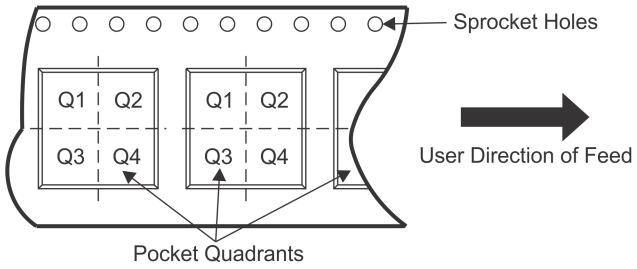

*All dimensions are nominal

Device	Package Type	Package Drawing	Pins	SPQ	Reel Diameter (mm)	Reel Width W1 (mm)	A0 (mm)	B0 (mm)	K0 (mm)	P1 (mm)	W (mm)	Pin1 Quadrant
SN65HVD3082EDGKR	VSSOP	DGK	8	2500	330.0	12.4	5.3	3.4	1.4	8.0	12.0	Q1
SN65HVD3082EDGKR	VSSOP	DGK	8	2500	330.0	12.4	5.3	3.4	1.4	8.0	12.0	Q1
SN65HVD3082EDR	SOIC	D	8	2500	330.0	12.4	6.4	5.2	2.1	8.0	12.0	Q1
SN65HVD3082EDR	SOIC	D	8	2500	330.0	12.4	6.4	5.2	2.1	8.0	12.0	Q1
SN65HVD3082EDR	SOIC	D	8	2500	330.0	12.4	6.4	5.2	2.1	8.0	12.0	Q1
SN65HVD3082EDR	SOIC	D	8	2500	330.0	12.4	6.4	5.2	2.1	8.0	12.0	Q1
SN65HVD3085EDGKR	VSSOP	DGK	8	2500	330.0	12.4	5.3	3.4	1.4	8.0	12.0	Q1
SN65HVD3085EDR	SOIC	D	8	2500	330.0	12.4	6.4	5.2	2.1	8.0	12.0	Q1
SN65HVD3088EDGKR	VSSOP	DGK	8	2500	330.0	12.4	5.3	3.4	1.4	8.0	12.0	Q1
SN65HVD3088EDR	SOIC	D	8	2500	330.0	12.4	6.4	5.2	2.1	8.0	12.0	Q1
SN75HVD3082EDGKR	VSSOP	DGK	8	2500	330.0	12.4	5.3	3.4	1.4	8.0	12.0	Q1
SN75HVD3082EDR	SOIC	D	8	2500	330.0	12.4	6.4	5.2	2.1	8.0	12.0	Q1
SN75HVD3082EDR	SOIC	D	8	2500	330.0	12.4	6.4	5.2	2.1	8.0	12.0	Q1

TAPE AND REEL BOX DIMENSIONS

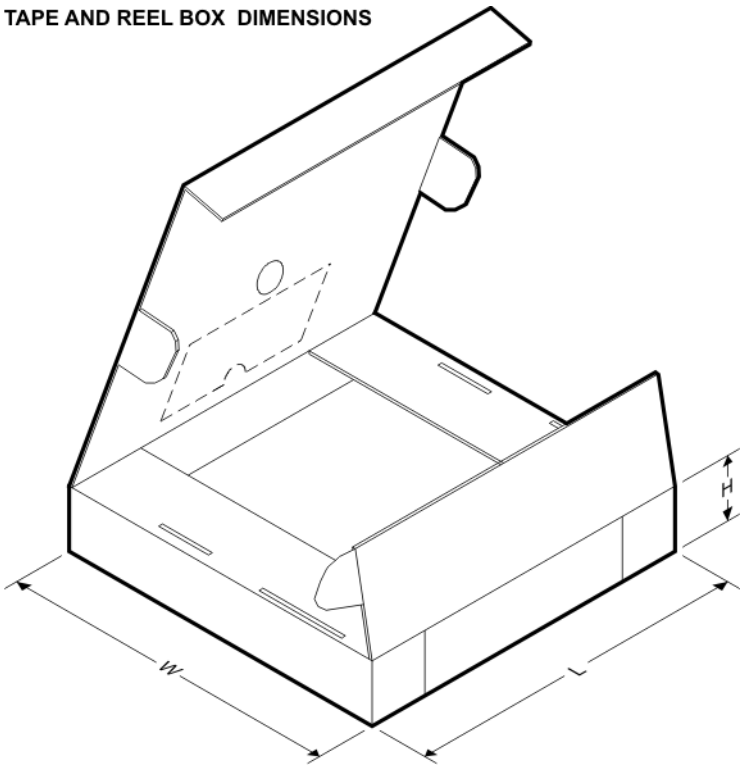

*All dimensions are nominal

Device	Package Type	Package Drawing	Pins	SPQ	Length (mm)	Width (mm)	Height (mm)
SN65HVD3082EDGKR	VSSOP	DGK	8	2500	350.0	350.0	43.0
SN65HVD3082EDGKR	VSSOP	DGK	8	2500	366.0	364.0	50.0
SN65HVD3082EDR	SOIC	D	8	2500	340.5	336.1	25.0
SN65HVD3082EDR	SOIC	D	8	2500	340.5	338.1	20.6
SN65HVD3082EDR	SOIC	D	8	2500	367.0	367.0	35.0
SN65HVD3082EDR	SOIC	D	8	2500	853.0	449.0	35.0
SN65HVD3085EDGKR	VSSOP	DGK	8	2500	364.0	364.0	27.0
SN65HVD3085EDR	SOIC	D	8	2500	340.5	336.1	25.0
SN65HVD3088EDGKR	VSSOP	DGK	8	2500	364.0	364.0	27.0
SN65HVD3088EDR	SOIC	D	8	2500	340.5	336.1	25.0
SN75HVD3082EDGKR	VSSOP	DGK	8	2500	366.0	364.0	50.0
SN75HVD3082EDR	SOIC	D	8	2500	367.0	367.0	35.0
SN75HVD3082EDR	SOIC	D	8	2500	340.5	336.1	25.0

TUBE

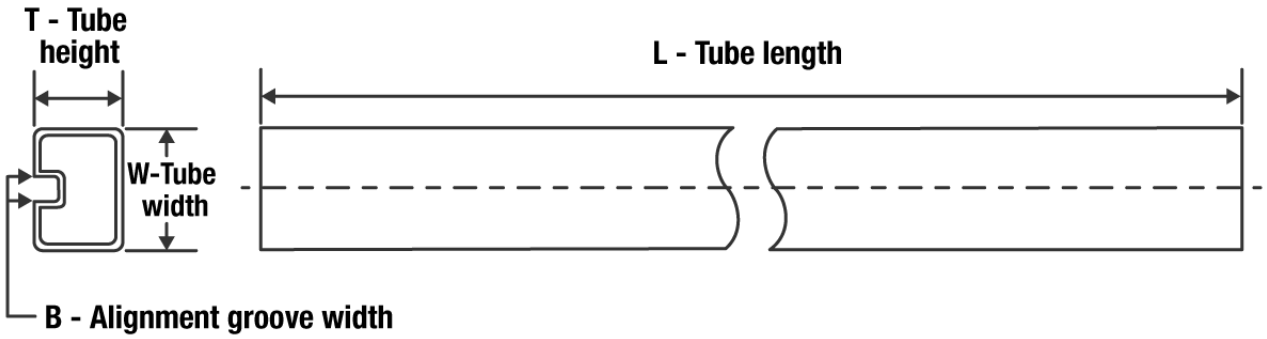

*All dimensions are nominal

Device	Package Name	Package Type	Pins	SPQ	L (mm)	W (mm)	T (µm)	B (mm)
SN65HVD3082ED	D	SOIC	8	75	507	8	3940	4.32
SN65HVD3082EDG4	D	SOIC	8	75	507	8	3940	4.32
SN65HVD3082EDGK	DGK	VSSOP	8	80	331.47	6.55	3000	2.88
SN65HVD3082EP	P	PDIP	8	50	506	13.97	11230	4.32
SN65HVD3082EPE4	P	PDIP	8	50	506	13.97	11230	4.32
SN65HVD3085ED	D	SOIC	8	75	507	8	3940	4.32
SN65HVD3085EDG4	D	SOIC	8	75	507	8	3940	4.32
SN65HVD3085EDGK	DGK	VSSOP	8	80	274	6.55	500	2.88
SN65HVD3085EDGK	DGK	VSSOP	8	80	331.47	6.55	3000	2.88
SN65HVD3088ED	D	SOIC	8	75	507	8	3940	4.32
SN65HVD3088EDG4	D	SOIC	8	75	507	8	3940	4.32
SN65HVD3088EDGK	DGK	VSSOP	8	80	330	6.55	500	2.88
SN65HVD3088EDGK	DGK	VSSOP	8	80	331.47	6.55	3000	2.88
SN65HVD3088EDGKG4	DGK	VSSOP	8	80	331.47	6.55	3000	2.88
SN65HVD3088EDGKG4	DGK	VSSOP	8	80	330	6.55	500	2.88
SN75HVD3082ED	D	SOIC	8	75	507	8	3940	4.32
SN75HVD3082EDG4	D	SOIC	8	75	507	8	3940	4.32
SN75HVD3082EDGK	DGK	VSSOP	8	80	331.47	6.55	3000	2.88
SN75HVD3082EP	P	PDIP	8	50	506	13.97	11230	4.32

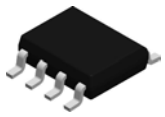

PACKAGE OUTLINE

D0008A

SOIC - 1.75 mm max height

SMALL OUTLINE INTEGRATED CIRCUIT

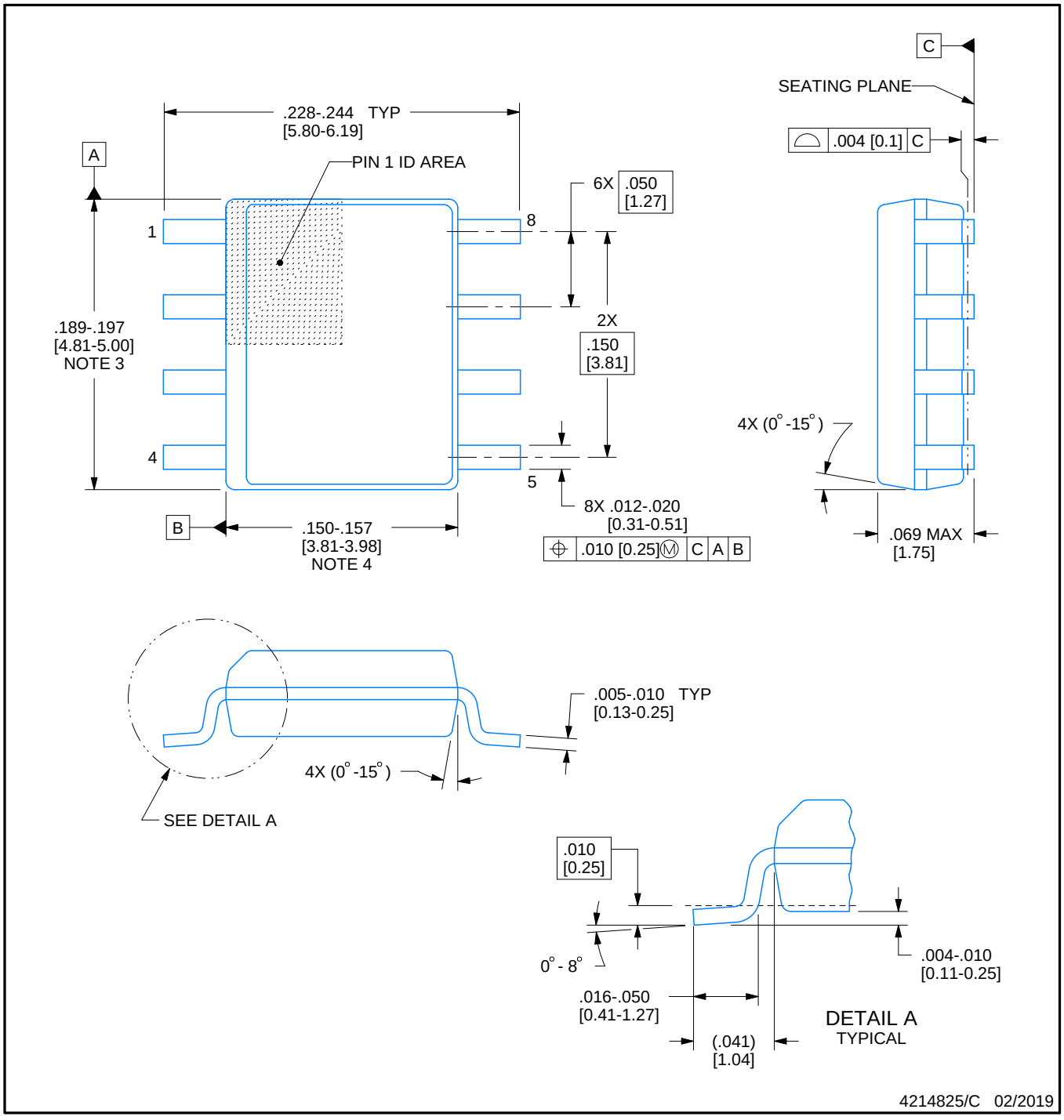

NOTES:

1. Linear dimensions are in inches [millimeters]. Dimensions in parenthesis are for reference only. Controlling dimensions are in inches. Dimensioning and tolerancing per ASME Y14.5M.
2. This drawing is subject to change without notice.
3. This dimension does not include mold flash, protrusions, or gate burrs. Mold flash, protrusions, or gate burrs shall not exceed .006 [0.15] per side.
4. This dimension does not include interlead flash.
5. Reference JEDEC registration MS-012, variation AA.

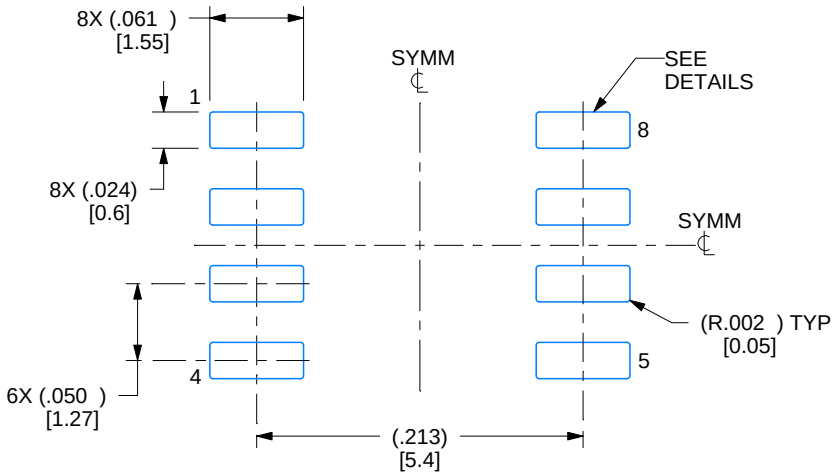

LAND PATTERN EXAMPLE
EXPOSED METAL SHOWN
SCALE:8X

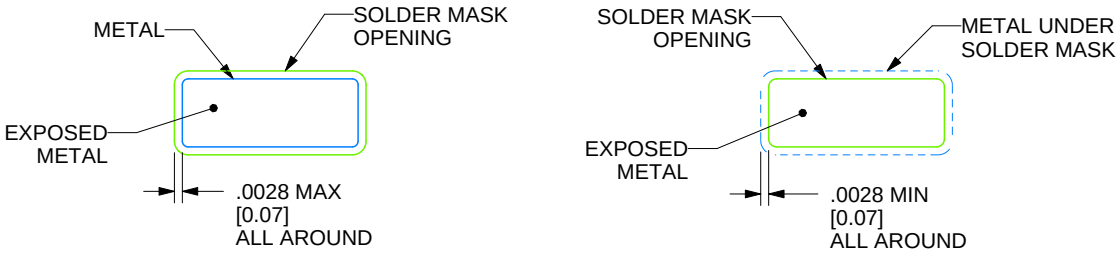

SOLDER MASK DETAILS

4214825/C 02/2019

NOTES: (continued)

6. Publication IPC-7351 may have alternate designs.
7. Solder mask tolerances between and around signal pads can vary based on board fabrication site.

EXAMPLE STENCIL DESIGN

D0008A

SOIC - 1.75 mm max height

SMALL OUTLINE INTEGRATED CIRCUIT

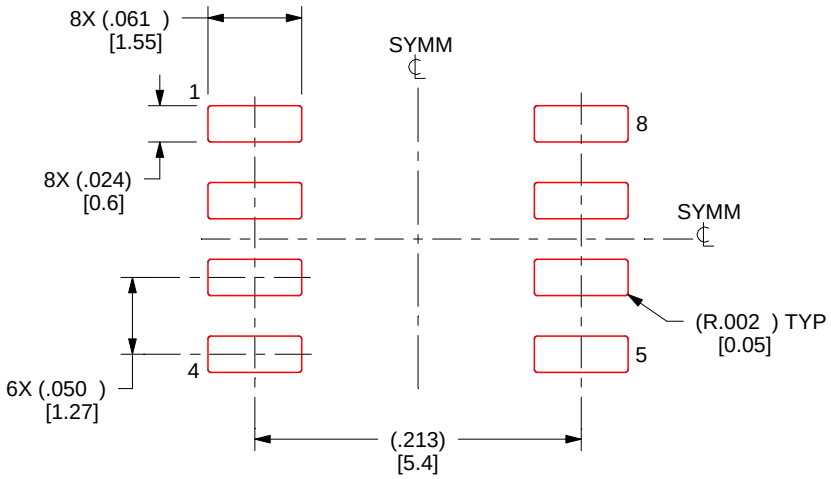

SOLDER PASTE EXAMPLE
BASED ON .005 INCH [0.125 MM] THICK STENCIL
SCALE:8X

4214825/C 02/2019

NOTES: (continued)

8. Laser cutting apertures with trapezoidal walls and rounded corners may offer better paste release. IPC-7525 may have alternate design recommendations.
9. Board assembly site may have different recommendations for stencil design.

P (R–PDIP–T8) PLASTIC DUAL–IN–LINE PACKAGE

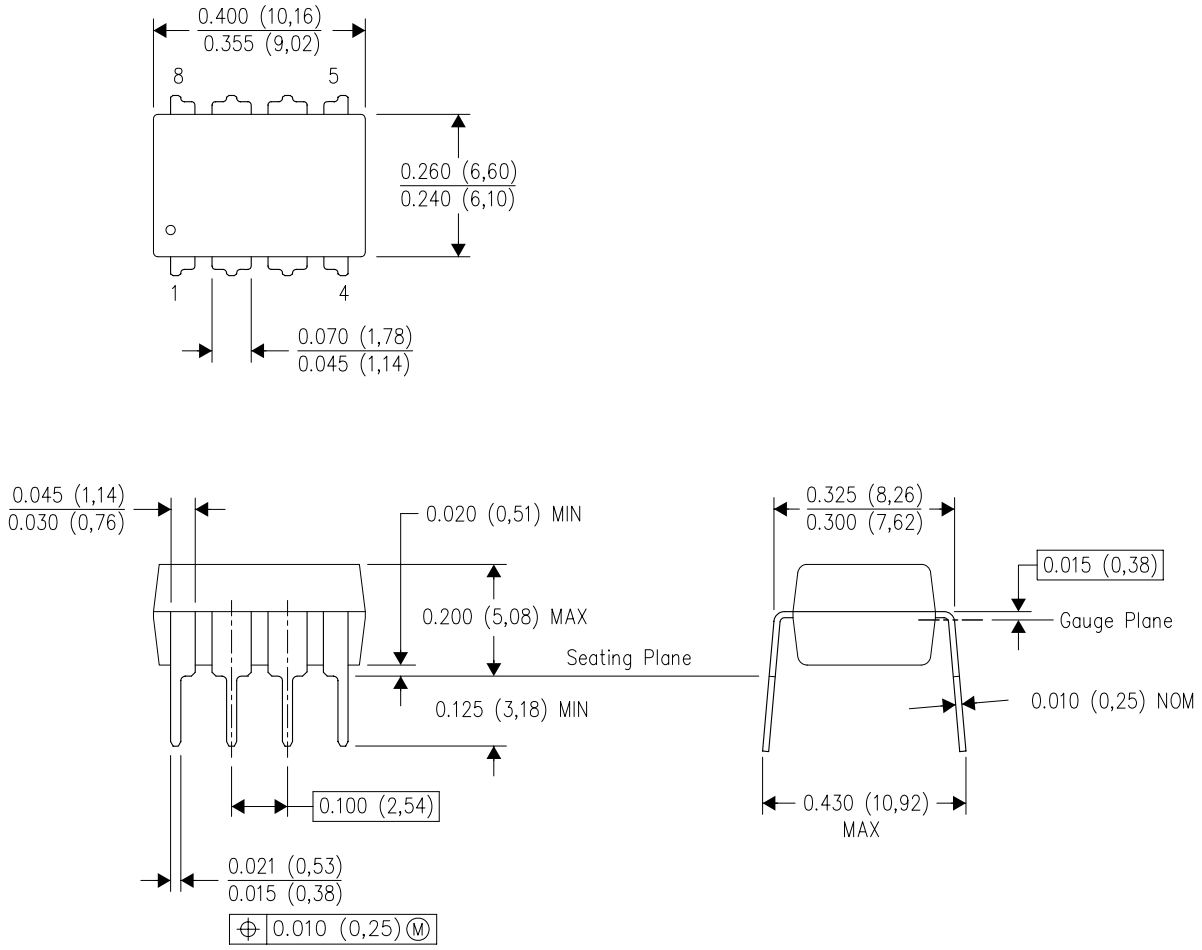

NOTES:
A. All linear dimensions are in inches (millimeters).
B. This drawing is subject to change without notice.
C. Falls within JEDEC MS–001 variation BA.

DGK (S–PDSO–G8) PLASTIC SMALL–OUTLINE PACKAGE

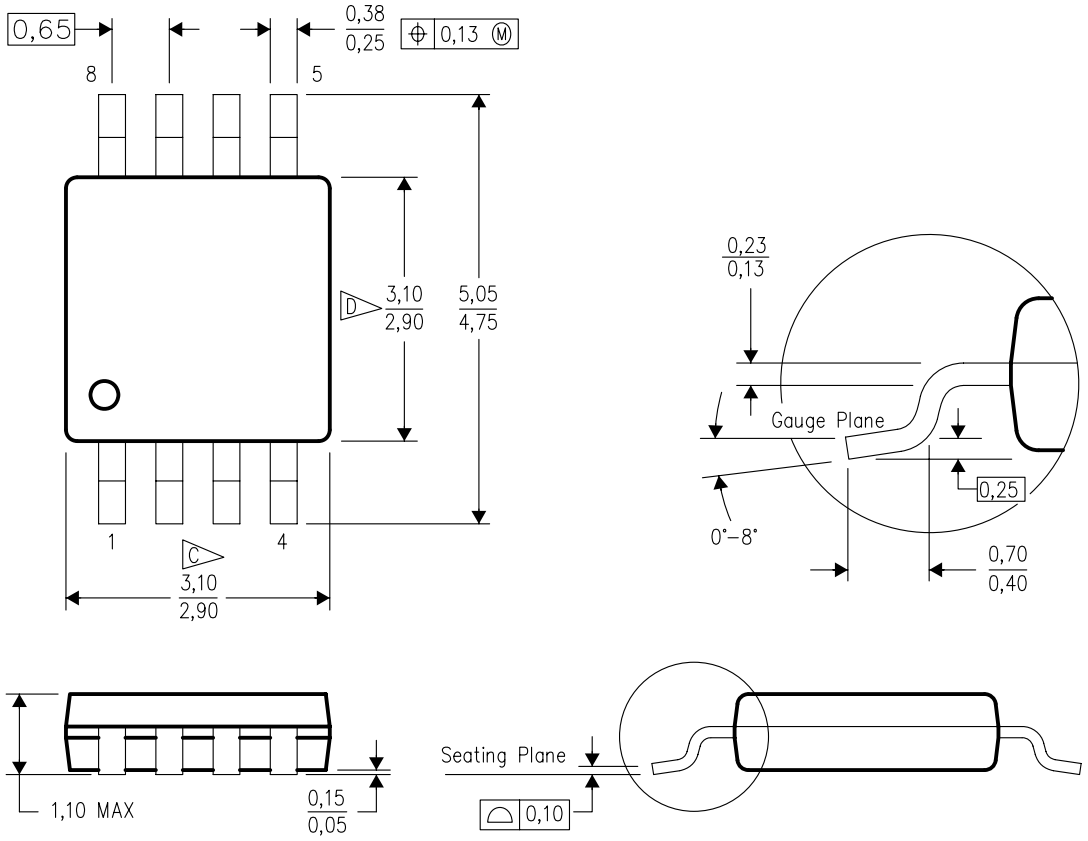

4073329/E 05/06

NOTES:
A. All linear dimensions are in millimeters.
B. This drawing is subject to change without notice.
C. Body length does not include mold flash, protrusions, or gate burrs. Mold flash, protrusions, or gate burrs shall not exceed 0.15 per end.
D. Body width does not include interlead flash. Interlead flash shall not exceed 0.50 per side.
E. Falls within JEDEC MO–187 variation AA, except interlead flash.

DGK (S–PDSO–G8) PLASTIC SMALL OUTLINE PACKAGE

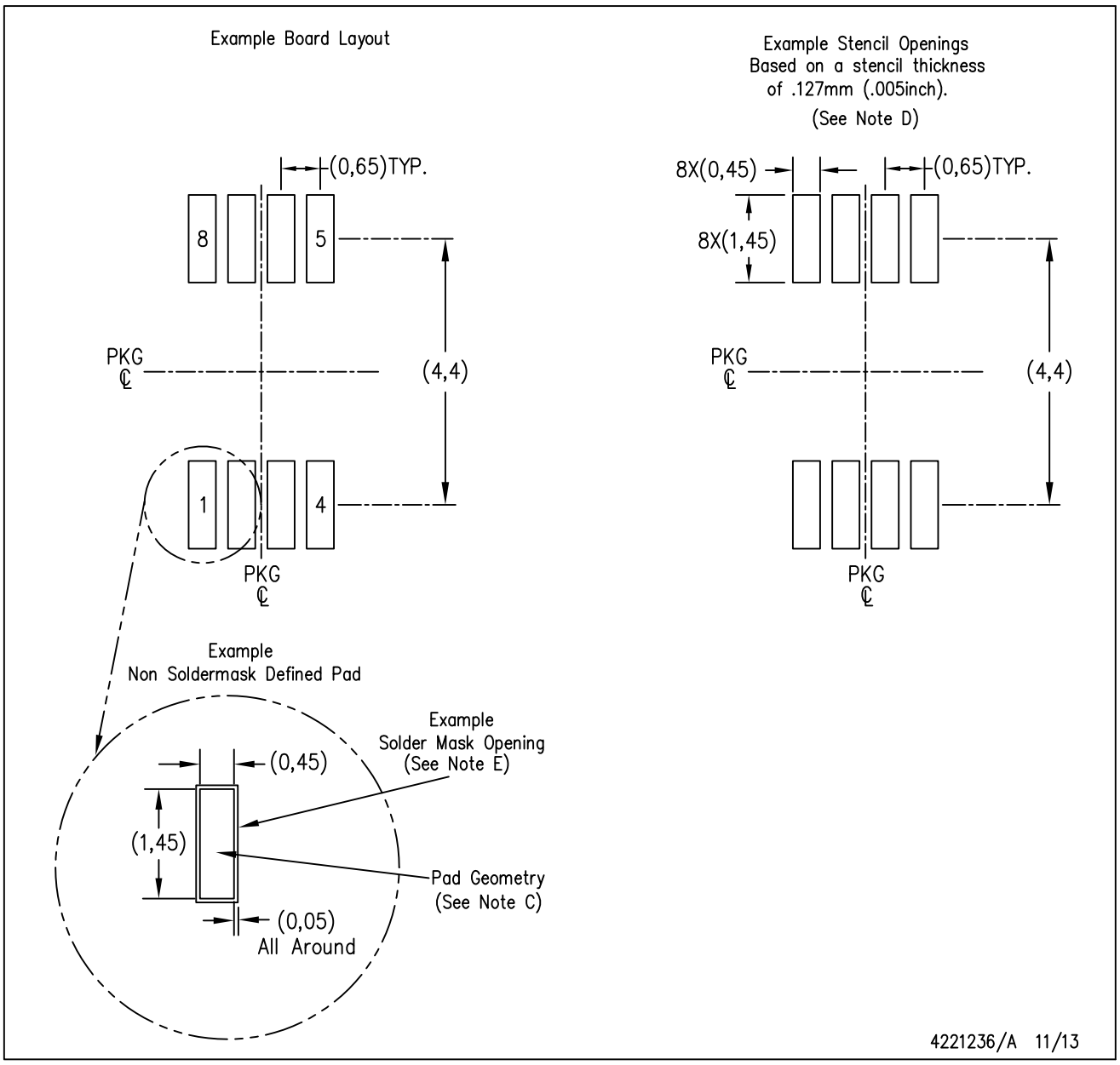

NOTES:
A. All linear dimensions are in millimeters.
B. This drawing is subject to change without notice.
C. Publication IPC–7351 is recommended for alternate designs.
D. Laser cutting apertures with trapezoidal walls and also rounding corners will offer better paste release. Customers should contact their board assembly site for stencil design recommendations. Refer to IPC–7525 for other stencil recommendations.
E. Customers should contact their board fabrication site for solder mask tolerances between and around signal pads.

重要声明和免责声明

TI“按原样”提供技术和可靠性数据（包括数据表）、设计资源（包括参考设计）、应用或其他设计建议、网络工具、安全信息和其他资源，不保证没有瑕疵且不做出任何明示或暗示的担保，包括但不限于对适销性、某特定用途方面的适用性或不侵犯任何第三方知识产权的暗示担保。

这些资源可供使用 TI 产品进行设计的熟练开发人员使用。您将自行承担以下全部责任：(1) 针对您的应用选择合适的 TI 产品，(2) 设计、验证并测试您的应用，(3) 确保您的应用满足相应标准以及任何其他功能安全、信息安全、监管或其他要求。

这些资源如有变更，恕不另行通知。TI 授权您仅可将这些资源用于研发本资源所述的 TI 产品的应用。严禁对这些资源进行其他复制或展示。您无权使用任何其他 TI 知识产权或任何第三方知识产权。您应全额赔偿因在这些资源的使用中对 TI 及其代表造成的任何索赔、损害、成本、损失和债务，TI 对此概不负责。

TI 提供的产品受 TI 的销售条款或 ti.com 上其他适用条款/TI 产品随附的其他适用条款的约束。TI 提供这些资源并不会扩展或以其他方式更改 TI 针对 TI 产品发布的适用的担保或担保免责声明。

TI 反对并拒绝您可能提出的任何其他或不同的条款。

邮寄地址：Texas Instruments, Post Office Box 655303, Dallas, Texas 75265
Copyright © 2022，德州仪器 (TI) 公司