INA199-Q1 汽车类、26V、双向、零漂移、低侧或高侧电压输出、电流分流监视器

1 特性

- 符合面向汽车应用的 AEC-Q100 标准：
  - 温度等级 1：-40°C 至 125°C，T_A
- 提供功能安全型
  - 可帮助进行功能安全系统设计的文档
- 宽共模范围：-0.1V 至 26V
- 失调电压：±150μV（最大值）（支持 10mV 满量程分流压降）
- 精度：
  - 增益误差（最大过热误差）：
    - ±1%（C 版本）
    - ±1.5%（B 版本）
  - 温漂：0.5μV/°C（最大值）
  - 增益漂移：10ppm/°C（最大值）
- 增益选项：
  - INA199x1-Q1：50V/V
  - INA199x2-Q1：100V/V
  - INA199x3-Q1：200V/V
- 静态电流：100μA（最大值）
- 封装：6 引脚 SC70

2 应用

- 后视镜
- 制动系统
- EGR 阀
- 电动座椅
- 车身控制模块
- 电动车窗
- 座椅加热器
- 无线充电

3 说明

INA199-Q1 是一款电压输出、电流检测放大器，可在独立于电源电压的 -0.1V 至 26V 共模电压下检测分流器上的压降。共有三种固定增益可供选择：50V/V、100V/V 和 200V/V。零漂移架构的低偏移使得该器件能够在分流器上的最大压降低至 10mV（满量程）的情况下进行电流感应。

该器件可由一个电压为 2.7V 至 26V 的单电源供电，最大电源电流为 100μA。所有增益选项的额定工作温度均为 -40°C 至 +125°C，并且采用了 6 引脚 SC70 封装。

器件信息(1)

器件型号	封装	封装尺寸（标称值）
INA199-Q1	SC70 (6)	2.00mm × 1.25mm

(1) 如需了解所有可用封装，请参阅数据表末尾的封装选项附录。

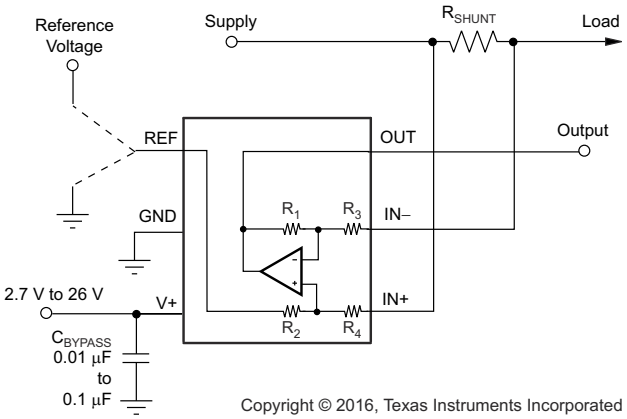

简化版原理图

本文档旨在为方便起见，提供有关 TI 产品中文版本的信息，以确认产品的概要。有关适用的官方英文版本的最新信息，请访问 www.ti.com，其内容始终优先。TI 不保证翻译的准确性和有效性。在实际设计之前，请务必参考最新版本的英文版本。

Table of Contents

1 特性.....1
2 应用.....1
3 说明.....1
4 Revision History.....2
5 Device Comparison.....3
6 Pin Configuration and Functions.....3
7 Specifications.....4
7.1 Absolute Maximum Ratings.....4
7.2 ESD Ratings.....4
7.3 Recommended Operating Conditions.....4
7.4 Thermal Information.....4
7.5 Electrical Characteristics.....5
7.6 Typical Characteristics.....6
8 Detailed Description.....10
8.1 Overview.....10
8.2 Functional Block Diagram.....10
8.3 Feature Description.....10
8.4 Device Functional Modes.....10
9 Application and Implementation.....11
9.1 Application Information.....11
9.2 Typical Applications.....17
10 Power Supply Recommendations.....19
11 Layout.....19
11.1 Layout Guidelines.....19
11.2 Layout Example.....19
12 Device and Documentation Support.....20
12.1 Documentation Support.....20
12.2 接收文档更新通知.....20
12.3 支持资源.....20
12.4 Trademarks.....20
12.5 Electrostatic Discharge Caution.....20
12.6 Glossary.....20
13 Mechanical, Packaging, and Orderable Information.....20

4 Revision History

注：以前版本的页码可能与当前版本的页码不同

Changes from Revision D (August 2019) to Revision E (May 2021) — **Page**

- 更新了整个文档中的表格、图和交叉参考的编号格式.....1
- 添加了“功能安全”要点.....1

Changes from Revision C (August 2017) to Revision D (August 2019) — **Page**

- Changed V_S and V_{IN} maximum values from 26 V to 28 V in *Absolute Maximum Ratings* table.....4
- Changed differential V_{IN} minimum value from –26 V to –28 V in *Absolute Maximum Ratings* table.....4
- Added new Note 2 with caution regarding operation between 26 V and 28 V.....4

Changes from Revision B (July 2016) to Revision C (August 2017) — **Page**

- 在数据表中添加了 C 版本器件及相关内容.....1
- Changed location of V_S voltage range from *Electrical Characteristics* table to *Recommended Operating Conditions* table.....5
- Deleted redundant *Temperature Range* section from *Electrical Characteristics* table; all information already shown in *Thermal Information* and *Recommended Operating Conditions* tables.....5

Changes from Revision A (May 2016) to Revision B (July 2016) — **Page**

- Changed *ESD Ratings* table: changed HBM value and deleted machine model row.....4

Changes from Revision * (March 2016) to Revision A (May 2016) — **Page**

- 已投入量产.....1

Copyright © 2021 Texas Instruments Incorporated

5 Device Comparison

表 5-1. Device Comparison

PRODUCT	GAIN	R_3 AND R_4	R_1 AND R_2
INA199B1-Q1	50 V/V	20 kΩ	1 MΩ
INA199C1-Q1			
INA199B2-Q1	100 V/V	10 kΩ	1 MΩ
INA199C2-Q1			
INA199B3-Q1	200 V/V	5 kΩ	1 MΩ
INA199C3-Q1			

6 Pin Configuration and Functions

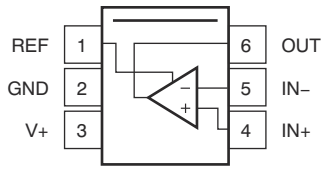

图 6-1. DCK Package 6-Pin SC70 Top View

表 6-1. Pin Functions

PIN		I/O	DESCRIPTION
NAME	NO.		
GND	2	Analog	Ground
IN –	5	Analog input	Connect to load side of shunt resistor
IN+	4	Analog input	Connect to supply side of shunt resistor
OUT	6	Analog output	Output voltage
REF	1	Analog input	Reference voltage, 0 V to V+
V+	3	Analog	Power supply, 2.7 V to 26 V

Copyright © 2021 Texas Instruments Incorporated

7 Specifications

7.1 Absolute Maximum Ratings

over operating free-air temperature range (unless otherwise noted)[1]

		MIN	MAX	UNIT
Supply voltage[2]			28	V
Analog inputs, V_{IN+}, V_{IN-} [2] [3]	Differential (V_{IN+}) – (V_{IN-})	–28	28	V
	Common-mode	GND – 0.1	28	
REF input		GND – 0.3	(V+) + 0.3	V
Output		GND – 0.3	(V+) + 0.3	V
Temperature	Operating, T_A	–40	125	°C
	Junction, T_J		150	
	Storage, T_{stg}	–65	150	

(1) Stresses beyond those listed under *Absolute Maximum Ratings* may cause permanent damage to the device. These are stress ratings only, which do not imply functional operation of the device at these or any other conditions beyond those indicated under *Recommended Operating Conditions*. Exposure to absolute-maximum-rated conditions for extended periods may affect device reliability.
(2) Sustained operation between 26 V and 28 V for more than a few minutes may cause permanent damage to the device.
(3) V_{IN+} and V_{IN-} are the voltages at the IN+ and IN– pins, respectively.

7.2 ESD Ratings

			VALUE	UNIT
$V_{(ESD)}$	Electrostatic discharge	Human-body model (HBM), per AEC Q100-002[1] HBM ESD classification level 2	±3500	V
		Charged-device model (CDM), per AEC Q100-002 CDM ESD classification level C6	±1000	

(1) AEC Q100-002 indicates that HBM stressing shall be in accordance with the ANSI/ESDA/JEDEC JS-001 specification.

7.3 Recommended Operating Conditions

over operating free-air temperature range (unless otherwise noted)

		MIN	NOM	MAX	UNIT
V_{CM}	Common-mode input voltage		12		V
V_S	Operating supply voltage (applied to V+)	2.7	5	26	V
T_A	Operating free-air temperature	–40		125	°C

7.4 Thermal Information

THERMAL METRIC[1]		INA199-Q1 DCK (SC70) 6 PINS	UNIT
$R_{\theta JA}$	Junction-to-ambient thermal resistance	227.3	°C/W
$R_{\theta JC(top)}$	Junction-to-case (top) thermal resistance	79.5	°C/W
$R_{\theta JB}$	Junction-to-board thermal resistance	72.1	°C/W
ψ_{JT}	Junction-to-top characterization parameter	3.6	°C/W
ψ_{JB}	Junction-to-board characterization parameter	70.4	°C/W
$R_{\theta JC(bot)}$	Junction-to-case (bottom) thermal resistance	N/A	°C/W

(1) For more information about traditional and new thermal metrics, see the *Semiconductor and IC Package Thermal Metrics* application report.

Copyright © 2021 Texas Instruments Incorporated

7.5 Electrical Characteristics

at T_A = 25°C, V_S = 5 V, V_{IN+} = 12 V, V_{SENSE} = V_{IN+} – V_{IN-}, and V_{REF} = V_S / 2 (unless otherwise noted)

PARAMETER		TEST CONDITIONS		MIN	TYP	MAX	UNIT
INPUT							
V_{CM}	Common-mode input voltage	T_A = –40°C to +125°C		–0.1		26	V
CMR	Common-mode rejection	V_{IN+} = 0 V to 26 V, V_{SENSE} = 0 mV, T_A = –40°C to +125°C		100	120		dB
V_{OS}	Offset voltage, RTI(1)	V_{SENSE} = 0 mV			±5	±150	µV
dV_{OS}/dT	V_{OS} vs. temperature	T_A = –40°C to +125°C			0.1	0.5	µV/°C
PSR	Power-supply rejection	V_S = 2.7 V to 18 V, V_{IN+} = 18 V, V_{SENSE} = 0 mV			±0.1		µV/V
I_B	Input bias current	V_{SENSE} = 0 mV			28		µA
I_{OS}	Input offset current	V_{SENSE} = 0 mV			±0.02		µA
OUTPUT							
G	Gain	INA199x1-Q1			50		V/V
		INA199x2-Q1			100		
		INA199x3-Q1			200		
	Gain error	V_{SENSE} = –5 mV to 5 mV, T_A = –40°C to +125°C	B version		±0.03%	±1.5%	
			C version		±0.03%	±1%	
	Gain error vs. temperature	T_A = –40°C to +125°C			3	10	ppm/°C
	Nonlinearity error	V_{SENSE} = –5 mV to +5 mV			±0.01%		
	Maximum capacitive load	No sustained oscillation			1		nF
VOLTAGE OUTPUT(2)							
	Swing to V+ power-supply rail	R_L = 10 kΩ to GND, T_A = –40°C to +125°C			(V+) – 0.05	(V+) – 0.2	V
	Swing to GND	R_L = 10 kΩ to GND, T_A = –40°C to +125°C			(V_{GND}) + 0.005	(V_{GND}) + 0.05	V
FREQUENCY RESPONSE							
GBW	Bandwidth	C_{LOAD} = 10 pF	INA199x1-Q1		80		kHz
			INA199x2-Q1		30		
			INA199x3-Q1		14		
SR	Slew rate				0.4		V/µs
NOISE, RTI(1)							
	Voltage noise density				25		nV/√Hz
POWER SUPPLY							
I_Q	Quiescent current	V_{SENSE} = 0 mV			65	100	µA
	I_Q over temperature	T_A = –40°C to +125°C				115	µA

(1) RTI = referred-to-input.
(2) See typical characteristic curve, *Output Voltage Swing vs. Output Current* (图 7-6).

7.6 Typical Characteristics

performance measured with the INA199B3-Q1 at T_A = 25°C, V_S = 5 V, V_{IN+} = 12 V, and V_{REF} = V_S / 2 (unless otherwise noted)

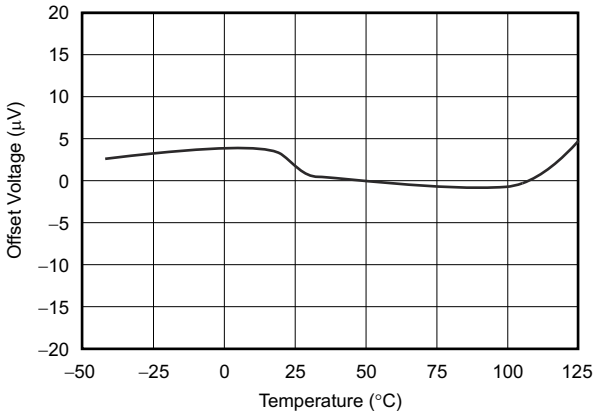

图 7-1. Offset Voltage vs. Temperature

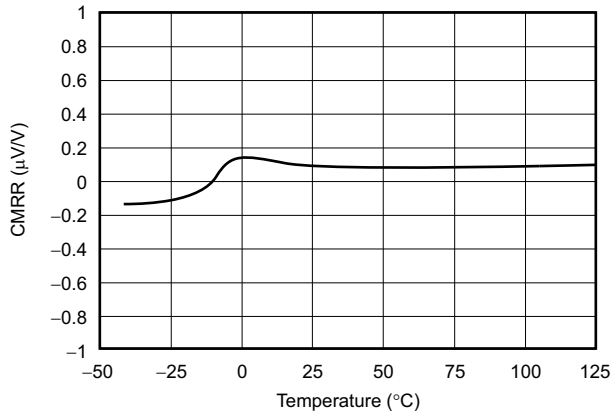

图 7-2. Common-Mode Rejection Ratio vs. Temperature

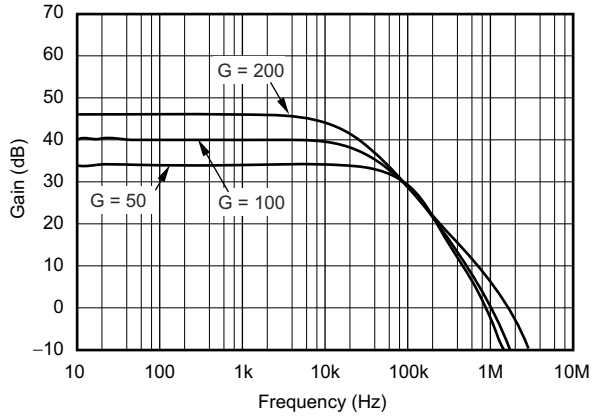

V_{CM} = 0 V, V_{DIF} = 15-mV_{PP} sine

图 7-3. Gain vs. Frequency

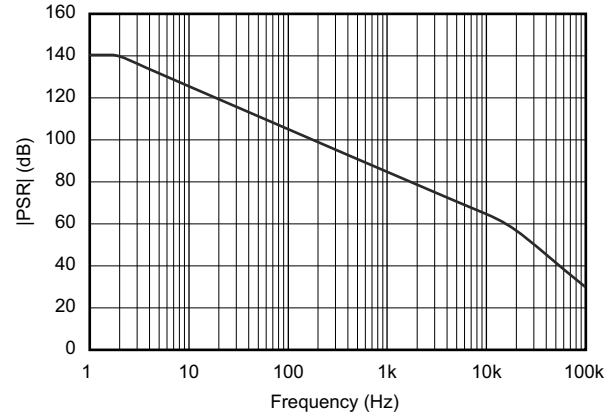

V_S = 5 V + 250-mV sine disturbance, V_{CM} = 0 V, V_{DIF} = shorted, V_{REF} = 2.5 V

图 7-4. Power-Supply Rejection Ratio vs. Frequency

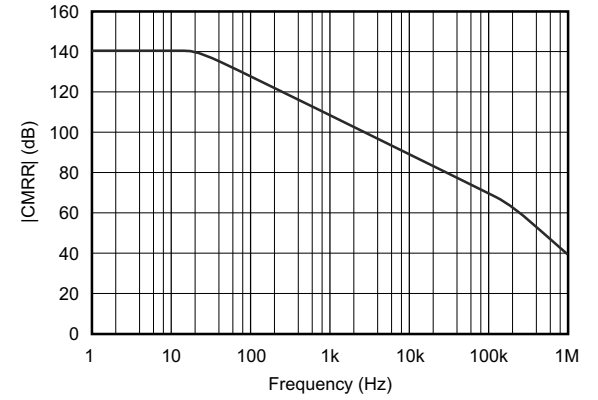

V_S = 5 V, V_{CM} = 1-V sine, V_{DIF} = shorted, V_{REF} = 2.5 V

图 7-5. Common-Mode Rejection Ratio vs. Frequency

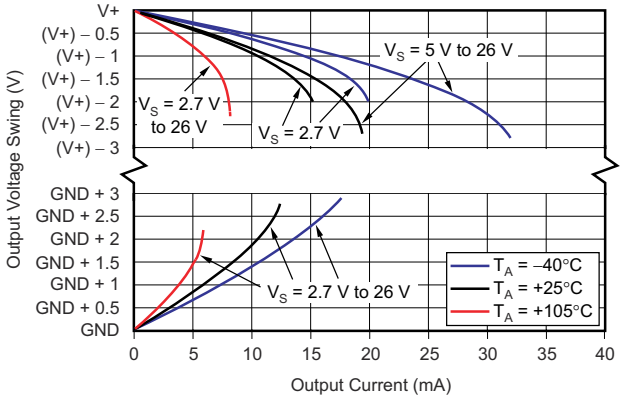

图 7-6. Output Voltage Swing vs. Output Current

Copyright © 2021 Texas Instruments Incorporated

7.6 Typical Characteristics (continued)

performance measured with the INA199B3-Q1 at T_A = 25°C, V_S = 5 V, V_{IN+} = 12 V, and V_{REF} = V_S / 2 (unless otherwise noted)

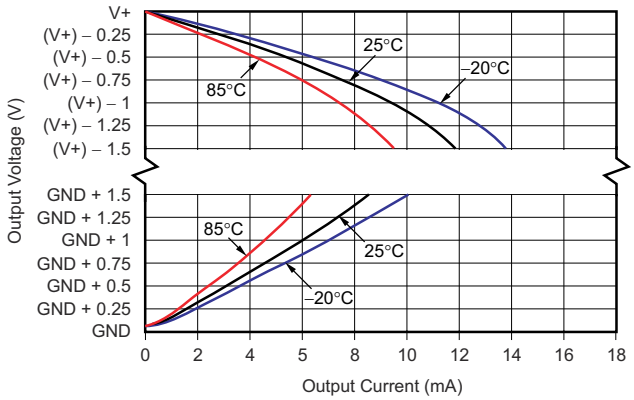

V_S = 2.5 V

图 7-7. Output Voltage Swing vs. Output Current

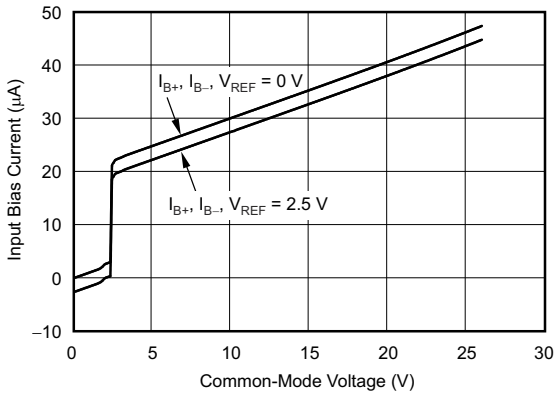

图 7-8. Input Bias Current vs. Common-Mode Voltage With Supply Voltage = 5 V

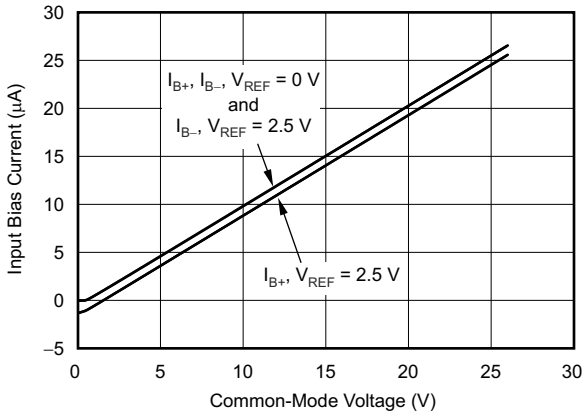

图 7-9. Input Bias Current vs. Common-Mode Voltage With Supply Voltage = 0 V (Shutdown)

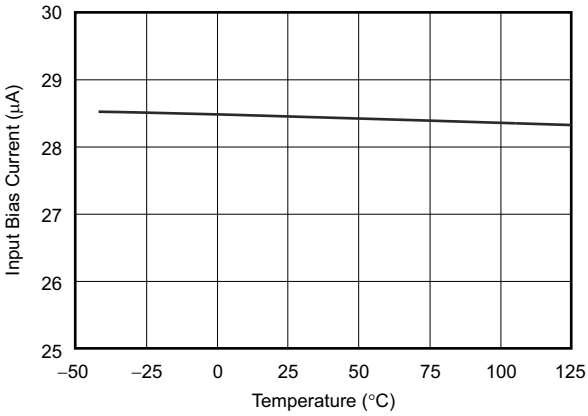

图 7-10. Input Bias Current vs. Temperature

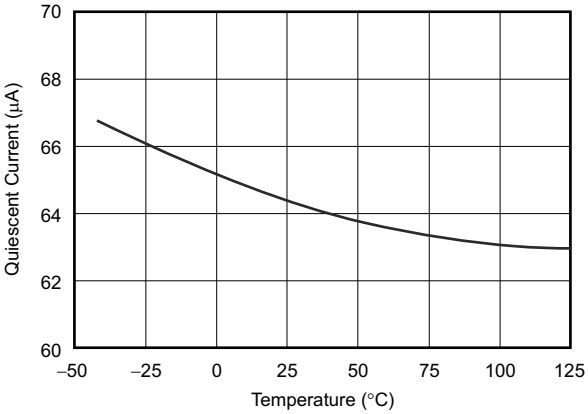

图 7-11. Quiescent Current vs. Temperature

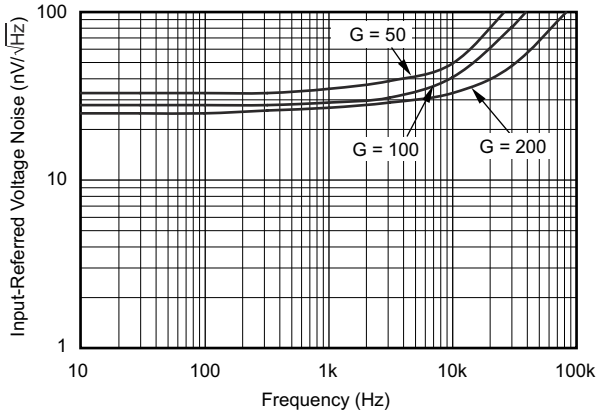

V_S = ±2.5 V, V_{REF} = 0 V, V_{IN-} and V_{IN+} = 0 V

图 7-12. Input-Referred Voltage Noise vs. Frequency

7.6 Typical Characteristics (continued)

performance measured with the INA199B3-Q1 at T_A = 25°C, V_S = 5 V, V_{IN+} = 12 V, and V_{REF} = V_S / 2 (unless otherwise noted)

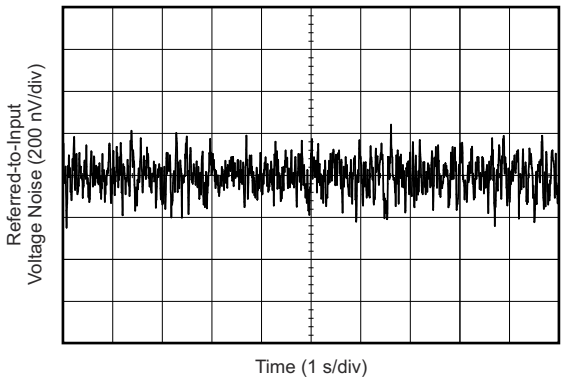

V_S = ±2.5 V, V_{CM} = 0 V, V_{DIF} = 0 V, V_{REF} = 0 V

图 7-13. 0.1-Hz to 10-Hz Voltage Noise (Referred-to-Input)

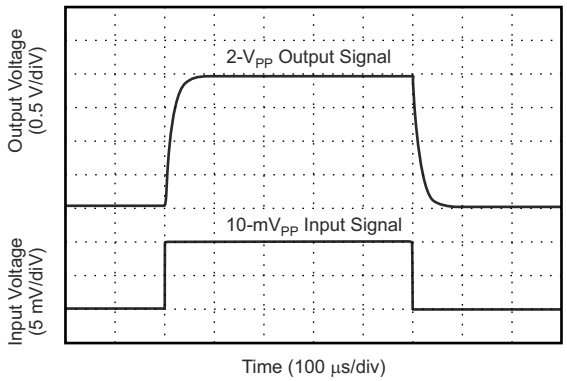

图 7-14. Step Response (10-mV$_{PP}$ Input Step)

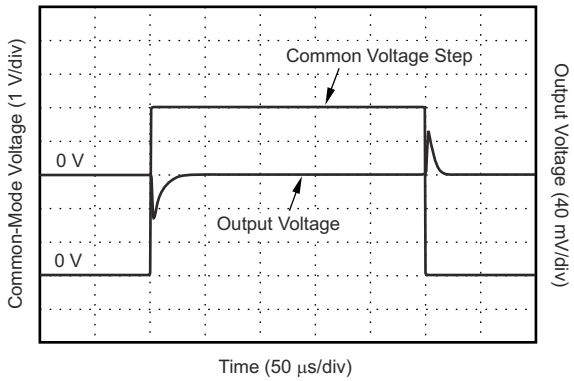

图 7-15. Common-Mode Voltage Transient Response

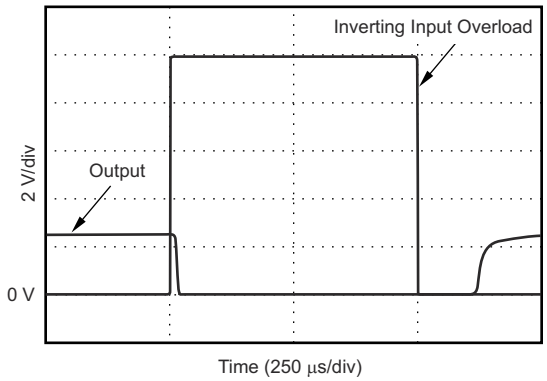

V_S = 5 V, V_{CM} = 12 V, V_{REF} = 2.5 V

图 7-16. Inverting Differential Input Overload

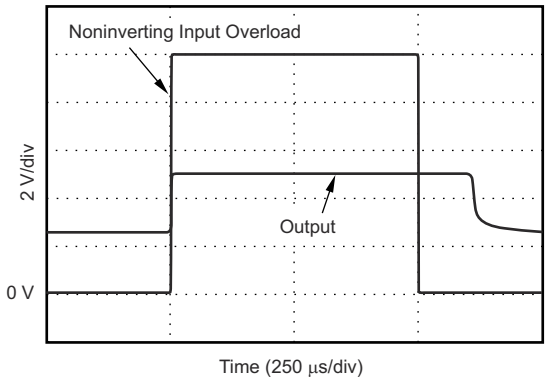

V_S = 5 V, V_{CM} = 12 V, V_{REF} = 2.5 V

图 7-17. Noninverting Differential Input Overload

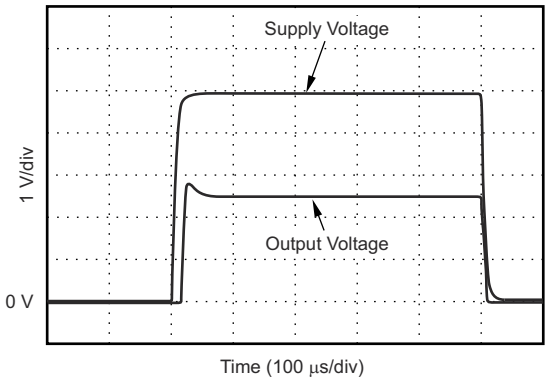

V_S = 5 V, 1-kHz step with V_{DIF} = 0 V, V_{REF} = 2.5 V

图 7-18. Start-Up Response

Copyright © 2021 Texas Instruments Incorporated

7.6 Typical Characteristics (continued)

performance measured with the INA199B3-Q1 at T_A = 25°C, V_S = 5 V, V_{IN+} = 12 V, and V_{REF} = V_S / 2 (unless otherwise noted)

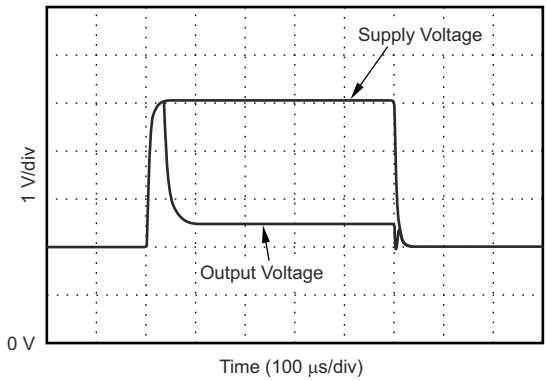

V_S = 5 V, 1-kHz step with V_{DIF} = 0 V, V_{REF} = 2.5 V

图 7-19. Brownout Recovery

8 Detailed Description

8.1 Overview

The INA199-Q1 is a 26-V, common-mode, zero-drift topology, current-sensing amplifier that can be used in both low-side and high-side configurations. The device is a specially-designed, current-sensing amplifier that is able to accurately measure voltages developed across a current-sensing resistor on common-mode voltages that far exceed the supply voltage powering the device. Current can be measured on input voltage rails as high as 26 V and the device can be powered from supply voltages as low as 2.7 V.

The zero-drift topology enables high-precision measurements with maximum input offset voltages as low as 150 µV with a maximum temperature contribution of 0.5 µV/°C over the full temperature range of –40°C to +125°C.

8.2 Functional Block Diagram

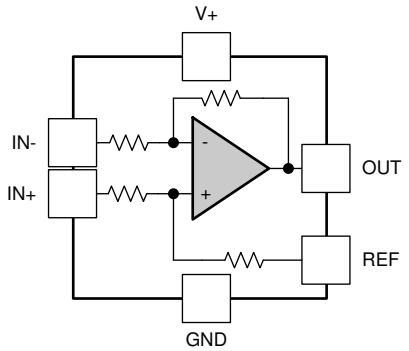

Copyright © 2016, Texas Instruments Incorporated

8.3 Feature Description

8.3.1 Zero-Drift Offset

The zero-drift offset performance of the INA199-Q1 offers several benefits. Most often, the primary advantage of the low offset characteristic enables lower full-scale drops across the shunt. For example, non-zero-drift current-shunt monitors typically require a full-scale range of 100 mV.

8.3.2 Accuracy

The INA199-Q1 series gives equivalent accuracy at a full-scale range on the order of 10 mV. This accuracy reduces shunt dissipation by an order of magnitude with many additional benefits.

8.3.3 Choice of Gain Options

The INA199-Q1 series provides three gain options: 50 V/V, 100 V/V, and 200 V/V, Some applications must measure current over a wide dynamic range that can take advantage of the low offset on the low end of the measurement. Most often, these applications use the lower gain of 50 V/V or 100 V/V to accommodate larger shunt drops on the upper end of the scale. For instance, the INA199B1-Q1 (with a factory-set gain of 50 V/V) operating on a 3.3-V supply can easily handle a full-scale shunt drop of 60 mV, with only 150 µV of offset. See the *Electrical Characteristics* for more information.

8.4 Device Functional Modes

The INA199-Q1 has a single functional mode and is operational when the power-supply voltage is greater than 2.7 V. The maximum power supply voltage for this device is 26 V.

Copyright © 2021 Texas Instruments Incorporated

9 Application and Implementation

Note

Information in the following applications sections is not part of the TI component specification, and TI does not warrant its accuracy or completeness. TI’s customers are responsible for determining suitability of components for their purposes, as well as validating and testing their design implementation to confirm system functionality.

9.1 Application Information

The INA199-Q1 measures the voltage developed across a current-sensing resistor when current passes through it. The ability to drive the reference pin to adjust the functionality of the output signal offers multiple configurations, as discussed throughout this section.

9.1.1 Basic Connections

图 9-1 shows the basic connections for the INA199-Q1. The input pins, IN+ and IN–, must be connected as close as possible to the shunt resistor to minimize any resistance in series with the shunt resistor.

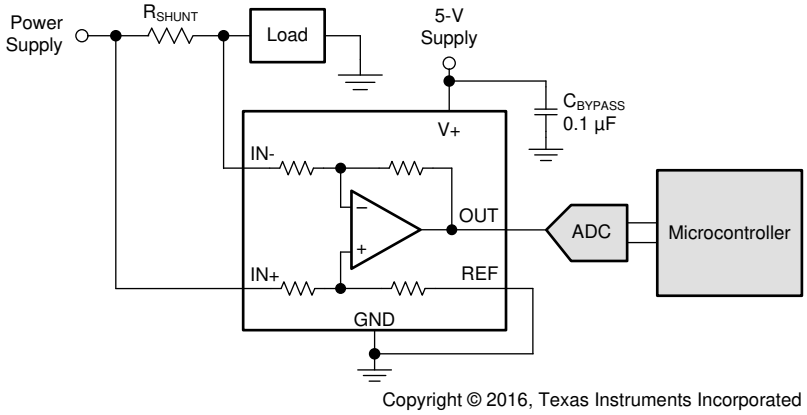

图 9-1. Typical Application

Power-supply bypass capacitors are required for stability. Applications with noisy or high-impedance power supplies may require additional decoupling capacitors to reject power-supply noise. Connect bypass capacitors close to the device pins.

9.1.2 Input Filtering

An obvious and straightforward filtering location is at the device output. However, this location negates the advantage of the low output impedance of the internal buffer. The only other filtering option is at the device input pins. This location, though, does require consideration of the ±30% tolerance of the internal resistances. 图 9-2 shows a filter placed at the inputs pins.

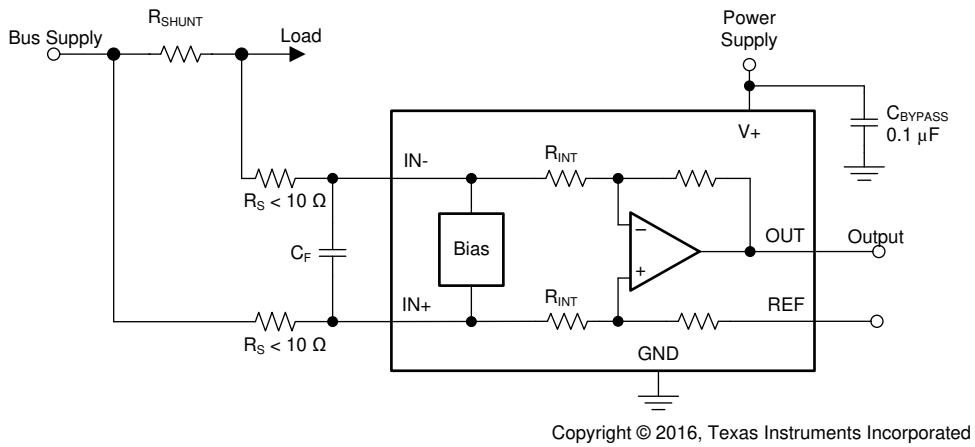

图 9-2. Filter at Input Pins

The addition of external series resistance, however, creates an additional error in the measurement so the value of these series resistors must be 10 Ω (or less if possible) to reduce any affect to accuracy. The internal bias network shown in 图 9-2 present at the input pins creates a mismatch in input bias currents when a differential voltage is applied between the input pins. If additional external series filter resistors are added to the circuit, the mismatch in bias currents results in a mismatch of voltage drops across the filter resistors. This mismatch creates a differential error voltage that subtracts from the voltage developed at the shunt resistor. This error results in a voltage at the device input pins that is different than the voltage developed across the shunt resistor. Without the additional series resistance, the mismatch in input bias currents has little effect on device operation. The amount of error these external filter resistor add to the measurement can be calculated using 方程式 1, where the gain error factor is calculated using 方程式 2.

$$\text{Gain Error (\%)} = 100 - (100 \times \text{Gain Error Factor}) \tag{1}$$

$$\text{Gain Error Factor} = \frac{(1250 \times R_{INT})}{(1250 \times R_S) + (1250 \times R_{INT}) + (R_S \times R_{INT})} \tag{2}$$

where:

- R_{INT} is the internal input resistor (R_3 and R_4) and
- R_S is the external series resistance

The amount of variance in the differential voltage present at the device input relative to the voltage developed at the shunt resistor is based on both the external series resistance value and the internal input resistors, R_3 and R_4 (or R_{INT}, as shown in 图 9-2). The reduction of the shunt voltage reaching the device input pins appears as a gain error when comparing the output voltage relative to the voltage across the shunt resistor. A factor can be calculated to determine the amount of gain error that is introduced by the addition of external series resistance. The equation used to calculate the expected deviation from the shunt voltage to what is measured at the device input pins is given in 方程式 2.

Copyright © 2021 Texas Instruments Incorporated

With the adjustment factor equation including the device internal input resistance, this factor varies with each gain version, as listed in 表 9-1. Each individual device gain error factor is listed in 表 9-2.

表 9-1. Input Resistance

PRODUCT	GAIN (V/V)	R_{INT} (kΩ)
INA199B1-Q1	50	20
INA199C1-Q1		
INA199B2-Q1	100	10
INA199C2-Q1		
INA199B3-Q1	200	5
INA199C3-Q1		

表 9-2. Device Gain Error Factor

PRODUCT	SIMPLIFIED GAIN ERROR FACTOR
INA199B1-Q1	$\frac{20{,}000}{(17 \times R_S) + 20{,}000}$
INA199C1-Q1	
INA199B2-Q1	$\frac{10{,}000}{(9 \times R_S) + 10{,}000}$
INA199C2-Q1	
INA199B3-Q1	$\frac{1000}{R_S + 1000}$
INA199C3-Q1	

The gain error that can be expected from the addition of the external series resistors can then be calculated based on 方程式 1.

For example, when using an INA199B2-Q1 and the corresponding gain error equation from 表 9-2, a series resistance of 10-Ω results in a gain error factor of 0.991. The corresponding gain error is then calculated using 方程式 1, resulting in a gain error of approximately 0.89% solely because of the external 10-Ω series resistors. Using an INA199B1-Q1 with the same 10-Ω series resistor results in a gain error factor of 0.991 and a gain error of 0.84% again solely because of these external resistors.

9.1.3 Shutting Down the INA199-Q1

Although the INA199-Q1 series does not have a shutdown pin, the low power consumption of the device allows the output of a logic gate or transistor switch to power the INA199-Q1. This gate or switch turns on and turns off the INA199-Q1 power-supply quiescent current.

However, in current-shunt monitoring applications, there is also a concern for how much current is drained from the shunt circuit in shutdown conditions. Evaluating this current drain involves considering the simplified schematic of the INA199-Q1 in shutdown mode as shown in 图 9-3.

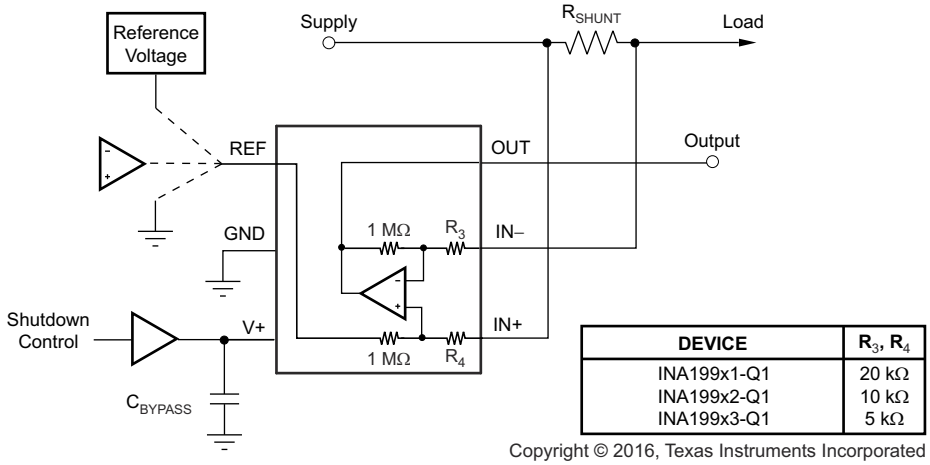

DEVICE	R_3, R_4
INA199x1-Q1	20 kΩ
INA199x2-Q1	10 kΩ
INA199x3-Q1	5 kΩ

1-MΩ paths from shunt inputs to the reference and the INA199-Q1 outputs.

图 9-3. Basic Circuit for Shutting Down the INA199-Q1 With a Grounded Reference

There is typically slightly more than a 1-MΩ impedance (from the combination of the 1-MΩ feedback and 5-kΩ input resistors) from each input of the INA199-Q1 to the OUT pin and to the REF pin. The amount of current flowing through these pins depends on the respective ultimate connection. For example, if the REF pin is grounded, the calculation of the effect of the 1-MΩ impedance from the shunt to ground is straightforward. However, if the reference or operational amplifier is powered when the INA199-Q1 is shut down, then the calculation is direct; instead of assuming a 1-MΩ impedance to ground, assume a 1-MΩ impedance to the reference voltage. If the reference or operational amplifier is also shut down, some knowledge of the reference or operational amplifier output impedance under shutdown conditions is required. For instance, if the reference source functions as an open circuit when not powered, little or no current flows through the 1-MΩ path.

Regarding the 1-MΩ path to the output pin, the output stage of a disabled INA199-Q1 does constitute a good path to ground. Consequently, this current is directly proportional to a shunt common-mode voltage applied across a 1-MΩ resistor.

Note

When the device is powered up, an additional, nearly constant, and well-matched 25 μA of current flows in each of the inputs as long as the shunt common-mode voltage is 3 V or higher. Below 2-V common-mode, the resulting 1-MΩ resistors are the only effects from this current.

Copyright © 2021 Texas Instruments Incorporated

9.1.4 REF Input Impedance Effects

As with any difference amplifier, the INA199-Q1 series common-mode rejection ratio is affected by any impedance present at the REF input. This concern is not a problem when the REF pin is connected directly to most references or power supplies. When using resistive dividers from the power supply or a reference voltage, the REF pin must be buffered by an operational amplifier.

In systems where the INA199-Q1 output can be sensed differentially, such as by a differential input analog-to-digital converter (ADC) or by using two separate ADC inputs, the effects of the external impedance on the REF input can be cancelled. 图 9-4 shows a method of capturing the output from the INA199-Q1 by using the REF pin as a reference.

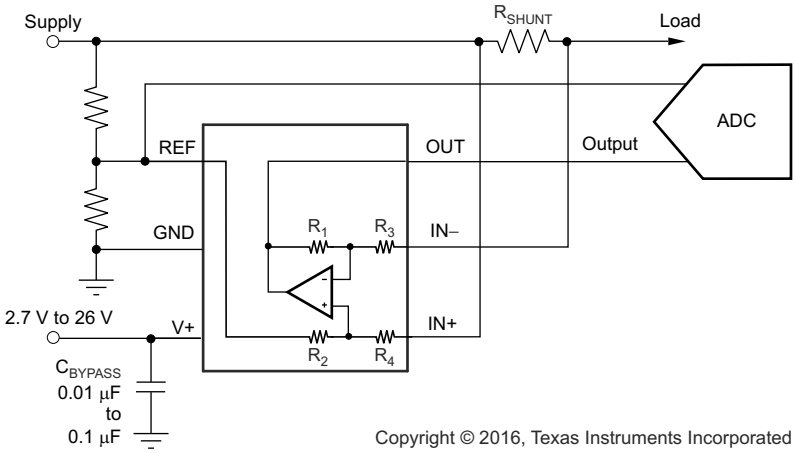

图 9-4. Sensing the INA199-Q1 to Cancel Effects of Impedance on the REF Input

9.1.5 Using the INA199-Q1 With Common-Mode Transients Above 26 V

With a small amount of additional circuitry, the INA199-Q1 series can be used in circuits subject to transients higher than 26 V, such as automotive applications. Use only zener diodes or zener-type transient absorbers (sometimes referred to as *transzorbs*); any other type of transient absorber has an unacceptable time delay. Start by adding a pair of resistors (as shown in 图 9-5) as a working impedance for the zener. Keeping these resistors as small as possible is preferable, most often approximately 10 Ω. Larger values can be used with an affect on gain as discussed in the *Input Filtering* section. Many applications are satisfied with a 10-Ω resistor along with conventional zener diodes of the lowest power rating that can be found because this circuit limits only short-term transients. This combination uses the least amount of board space. These diodes can be found in packages as small as SOT-523 or SOD-523. See the *TIDA-00302 Transient Robustness for Current Shunt Monitor* TI design (TIDU473) for more information on transient robustness and current-shunt monitor input protection.

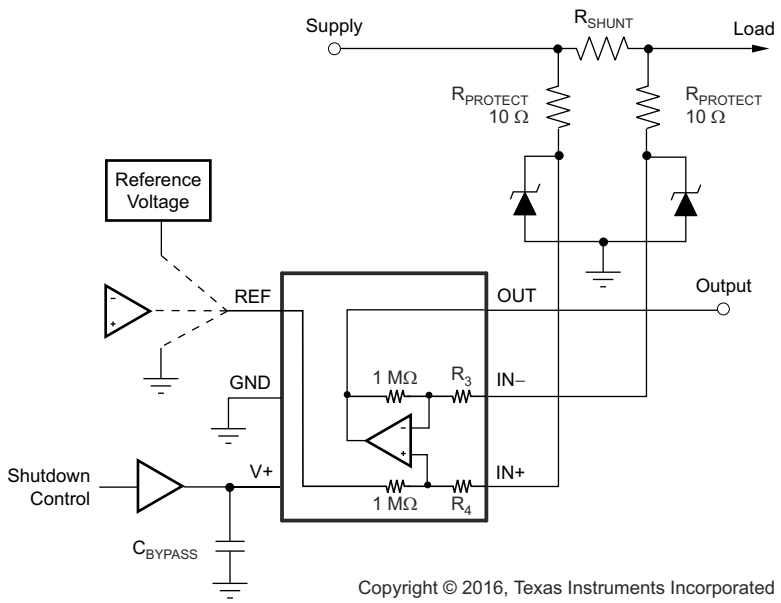

图 9-5. INA199-Q1 Transient Protection Using Dual Zener Diodes

In the event that low-power zeners do not have sufficient transient absorption capability and a higher power transzorb must be used, the most package-efficient solution then involves using a single transzorb and back-to-back diodes between the device inputs. The most space-efficient solutions are dual series-connected diodes in a single SOT-523 or SOD-523 package. This method is illustrated in 图 9-6. In either of these examples, the total board area required by the INA199-Q1 with all protective components is less than that of an 8-pin SOIC package, and only slightly greater than that of an 8-pin VSSOP package.

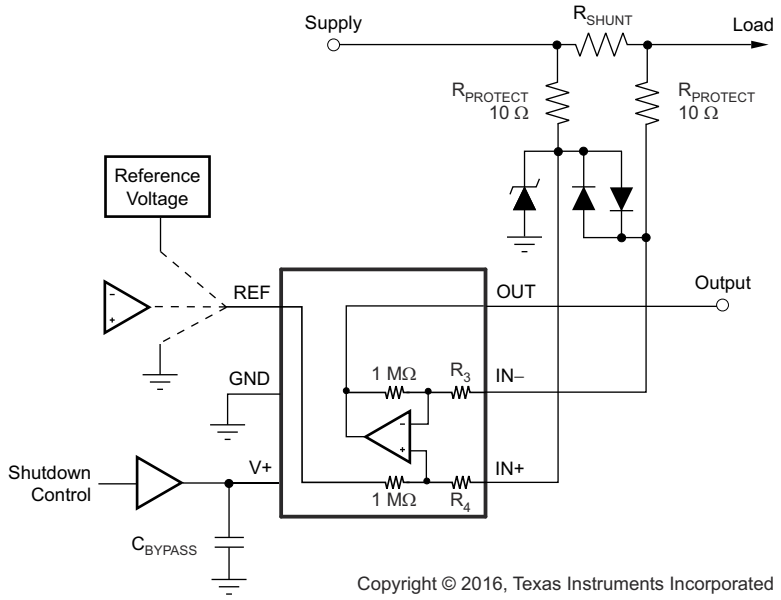

图 9-6. INA199-Q1 Transient Protection Using a Single Transzorb and Input Clamps

Copyright © 2021 Texas Instruments Incorporated

9.2 Typical Applications

9.2.1 Unidirectional Operation

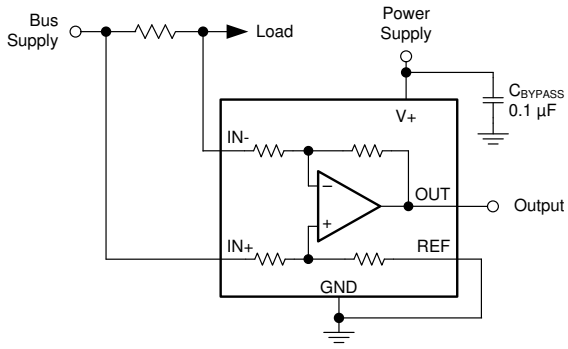

Copyright © 2016, Texas Instruments Incorporated

图 9-7. Unidirectional Application Schematic

9.2.1.1 Design Requirements

The device can be configured to monitor current flowing in one direction (unidirectional) or in both directions (bidirectional), depending on how the REF pin is configured. The most common case is unidirectional where the output is set to ground when current is not flowing by connecting the REF pin to ground; see 图 9-7. When the input signal increases, the output voltage at the OUT pin increases.

9.2.1.2 Detailed Design Procedure

The linear range of the output stage is limited in how close the output voltage can approach ground under zero input conditions. In unidirectional applications where measuring very low input currents is desirable, bias the REF pin to a convenient value above 50 mV to get the output into the linear range of the device. To limit common-mode rejection errors, buffering the reference voltage connected to the REF pin is recommended.

A less frequently-used output biasing method is to connect the REF pin to the supply voltage, V+. This method results in the output voltage saturating at 200 mV below the supply voltage when a differential input signal is not present. This method is similar to the output-saturated low condition without an input signal when the REF pin is connected to ground. The output voltage in this configuration only responds to negative currents that develop negative differential input voltage relative to the device IN – pin. Under these conditions, when the differential input signal increases negatively, the output voltage moves downward from the saturated supply voltage. The voltage applied to the REF pin must not exceed the device supply voltage.

9.2.1.3 Application Curve

An example output response of a unidirectional configuration is shown in 图 9-8. With the REF pin connected directly to ground, the output voltage is biased to this zero output level. The output rises above the reference voltage for positive differential input signals but cannot fall below the reference voltage for negative differential input signals because of the grounded reference voltage.

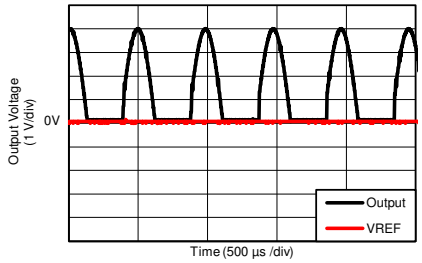

图 9-8. Unidirectional Application Output Response

9.2.2 Bidirectional Operation

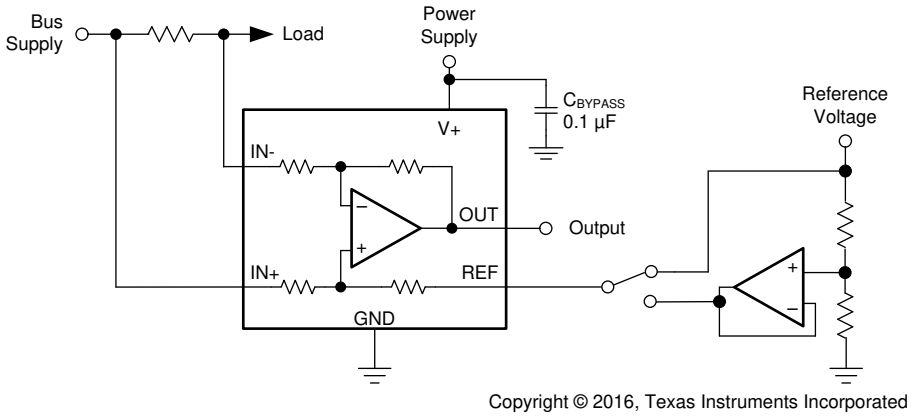

图 9-9. Bidirectional Application Schematic

9.2.2.1 Design Requirements

The device is a bidirectional, current-sense amplifier capable of measuring currents through a resistive shunt in two directions. This bidirectional monitoring is common in applications that include charging and discharging operations where the current flow-through resistor can change directions.

9.2.2.2 Detailed Design Procedure

The ability to measure this current flowing in both directions is enabled by applying a voltage on the REF pin, as shown in 图 9-9. The voltage applied to REF (V_{REF}) sets the output state that corresponds to the zero-input level state. The output then responds by rising above V_{REF} for positive differential signals (relative to the IN – pin) and falling below V_{REF} for negative differential signals. This reference voltage applied to the REF pin can be set anywhere between 0 V to V+. For bidirectional applications, V_{REF} is typically set at mid-scale for an equal signal range in both current directions. In some cases, however, V_{REF} is set at a voltage other than mid-scale when the bidirectional current and corresponding output signal do not need to be symmetrical.

9.2.2.3 Application Curve

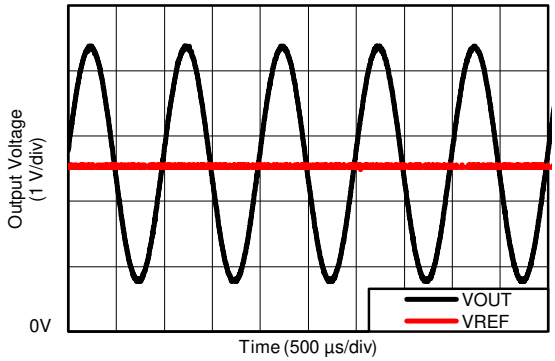

图 9-10. Bidirectional Application Output Response

Copyright © 2021 Texas Instruments Incorporated

10 Power Supply Recommendations

The input circuitry of the INA199-Q1 can accurately measure beyond its power-supply voltage, V+. For example, the V+ power supply can be 5 V, whereas the load power-supply voltage can be as high as 26 V. However, the output voltage range of the OUT pin is limited by the voltages on the power-supply pin. Furthermore, the INA199-Q1 can withstand the full input signal range up to the 26-V range in the input pins, regardless of whether the device has power applied or not.

11 Layout

11.1 Layout Guidelines

- Connect the input pins to the sensing resistor using a kelvin or 4-wire connection. This connection technique makes certain that only the current-sensing resistor impedance is detected between the input pins. Poor routing of the current-sensing resistor commonly results in additional resistance present between the input pins. Given the very low ohmic value of the current resistor, any additional high-current carrying impedance can cause significant measurement errors.
- Place the power-supply bypass capacitor as close as possible to the supply and ground pins. Using a bypass capacitor with a value of 0.1 μF is recommended. Additional decoupling capacitance can be added to compensate for noisy or high-impedance power supplies.

11.2 Layout Example

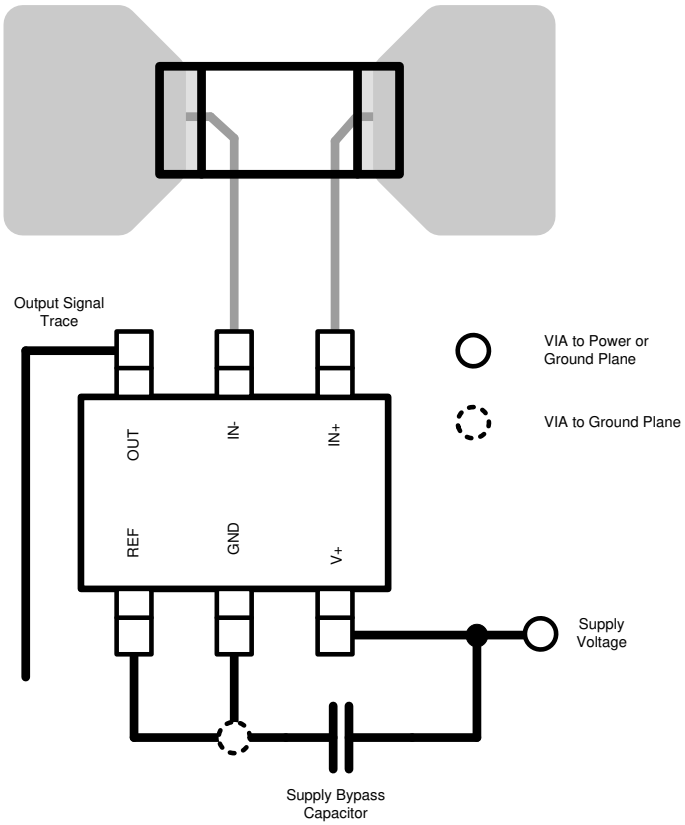

Copyright © 2017, Texas Instruments Incorporated

图 11-1. Recommended Layout

12 Device and Documentation Support

12.1 Documentation Support

12.1.1 Related Documentation

For related documentation see the following:

- Texas Instruments, *INA199B1-B3EVM* user's guide
- Texas Instruments, *TIDA-00302 Transient Robustness for Current Shunt Monitor* TI design

12.2 接收文档更新通知

要接收文档更新通知，请导航至 ti.com 上的器件产品文件夹。点击*订阅更新* 进行注册，即可每周接收产品信息更改摘要。有关更改的详细信息，请查看任何已修订文档中包含的修订历史记录。

12.3 支持资源

TI E2E™ 支持论坛是工程师的重要参考资料，可直接从专家获得快速、经过验证的解答和设计帮助。搜索现有解答或提出自己的问题可获得所需的快速设计帮助。

链接的内容由各个贡献者“按原样”提供。这些内容并不构成 TI 技术规范，并且不一定反映 TI 的观点；请参阅 TI 的《使用条款》。

12.4 Trademarks

TI E2E™ is a trademark of Texas Instruments.
所有商标均为其各自所有者的财产。

12.5 Electrostatic Discharge Caution

This integrated circuit can be damaged by ESD. Texas Instruments recommends that all integrated circuits be handled with appropriate precautions. Failure to observe proper handling and installation procedures can cause damage.

ESD damage can range from subtle performance degradation to complete device failure. Precision integrated circuits may be more susceptible to damage because very small parametric changes could cause the device not to meet its published specifications.

12.6 Glossary

TI Glossary	This glossary lists and explains terms, acronyms, and definitions.

13 Mechanical, Packaging, and Orderable Information

The following pages include mechanical, packaging, and orderable information. This information is the most current data available for the designated devices. This data is subject to change without notice and revision of this document. For browser-based versions of this data sheet, refer to the left-hand navigation.

Copyright © 2021 Texas Instruments Incorporated

重要声明和免责声明

TI 提供技术和可靠性数据（包括数据表）、设计资源（包括参考设计）、应用或其他设计建议、网络工具、安全信息和其他资源，不保证没有瑕疵且不做出任何明示或暗示的担保，包括但不限于对适销性、某特定用途方面的适用性或不侵犯任何第三方知识产权的暗示担保。

这些资源可供使用 TI 产品进行设计的熟练开发人员使用。您将自行承担以下全部责任：(1) 针对您的应用选择合适的 TI 产品，(2) 设计、验证并测试您的应用，(3) 确保您的应用满足相应标准以及任何其他安全、安保或其他要求。这些资源如有变更，恕不另行通知。TI 授权您仅可将这些资源用于研发本资源所述的 TI 产品的应用。严禁对这些资源进行其他复制或展示。您无权使用任何其他 TI 知识产权或任何第三方知识产权。您应全额赔偿因在这些资源的使用中对 TI 及其代表造成的任何索赔、损害、成本、损失和债务，TI 对此概不负责。

TI 提供的产品受 TI 的销售条款 (https:www.ti.com/legal/termsofsale.html) 或 ti.com 上其他适用条款/TI 产品随附的其他适用条款的约束。TI 提供这些资源并不会扩展或以其他方式更改 TI 针对 TI 产品发布的适用的担保或担保免责声明。

邮寄地址：Texas Instruments, Post Office Box 655303, Dallas, Texas 75265
Copyright © 2021，德州仪器 (TI) 公司

PACKAGING INFORMATION

Orderable Device	Status (1)	Package Type	Package Drawing	Pins	Package Qty	Eco Plan (2)	Lead finish/ Ball material (6)	MSL Peak Temp (3)	Op Temp (°C)	Device Marking (4/5)	Samples
INA199B1QDCKRQ1	ACTIVE	SC70	DCK	6	3000	RoHS & Green	NIPDAU	Level-2-260C-1 YEAR	-40 to 125	13C	Samples
INA199B2QDCKRQ1	ACTIVE	SC70	DCK	6	3000	RoHS & Green	NIPDAU	Level-2-260C-1 YEAR	-40 to 125	13D	Samples
INA199B3QDCKRQ1	ACTIVE	SC70	DCK	6	3000	RoHS & Green	NIPDAU	Level-2-260C-1 YEAR	-40 to 125	13E	Samples
INA199C1QDCKRQ1	ACTIVE	SC70	DCK	6	3000	RoHS & Green	NIPDAU	Level-2-260C-1 YEAR	-40 to 125	17A	Samples
INA199C2QDCKRQ1	ACTIVE	SC70	DCK	6	3000	RoHS & Green	NIPDAU	Level-2-260C-1 YEAR	-40 to 125	17B	Samples
INA199C3QDCKRQ1	ACTIVE	SC70	DCK	6	3000	RoHS & Green	NIPDAU	Level-2-260C-1 YEAR	-40 to 125	17C	Samples

(1) The marketing status values are defined as follows:
ACTIVE: Product device recommended for new designs.
LIFEBUY: TI has announced that the device will be discontinued, and a lifetime-buy period is in effect.
NRND: Not recommended for new designs. Device is in production to support existing customers, but TI does not recommend using this part in a new design.
PREVIEW: Device has been announced but is not in production. Samples may or may not be available.
OBSOLETE: TI has discontinued the production of the device.

(2) **RoHS:** TI defines "RoHS" to mean semiconductor products that are compliant with the current EU RoHS requirements for all 10 RoHS substances, including the requirement that RoHS substance do not exceed 0.1% by weight in homogeneous materials. Where designed to be soldered at high temperatures, "RoHS" products are suitable for use in specified lead-free processes. TI may reference these types of products as "Pb-Free".
RoHS Exempt: TI defines "RoHS Exempt" to mean products that contain lead but are compliant with EU RoHS pursuant to a specific EU RoHS exemption.
Green: TI defines "Green" to mean the content of Chlorine (Cl) and Bromine (Br) based flame retardants meet JS709B low halogen requirements of <=1000ppm threshold. Antimony trioxide based flame retardants must also meet the <=1000ppm threshold requirement.

(3) MSL, Peak Temp. - The Moisture Sensitivity Level rating according to the JEDEC industry standard classifications, and peak solder temperature.

(4) There may be additional marking, which relates to the logo, the lot trace code information, or the environmental category on the device.

(5) Multiple Device Markings will be inside parentheses. Only one Device Marking contained in parentheses and separated by a "~" will appear on a device. If a line is indented then it is a continuation of the previous line and the two combined represent the entire Device Marking for that device.

(6) Lead finish/Ball material - Orderable Devices may have multiple material finish options. Finish options are separated by a vertical ruled line. Lead finish/Ball material values may wrap to two lines if the finish value exceeds the maximum column width.

Important Information and Disclaimer: The information provided on this page represents TI's knowledge and belief as of the date that it is provided. TI bases its knowledge and belief on information provided by third parties, and makes no representation or warranty as to the accuracy of such information. Efforts are underway to better integrate information from third parties. TI has taken and continues to take reasonable steps to provide representative and accurate information but may not have conducted destructive testing or chemical analysis on incoming materials and chemicals. TI and TI suppliers consider certain information to be proprietary, and thus CAS numbers and other limited information may not be available for release.

In no event shall TI's liability arising out of such information exceed the total purchase price of the TI part(s) at issue in this document sold by TI to Customer on an annual basis.

OTHER QUALIFIED VERSIONS OF INA199-Q1 :

- Catalog : INA199

NOTE: Qualified Version Definitions:

- Catalog - TI's standard catalog product

TAPE AND REEL INFORMATION

REEL DIMENSIONS

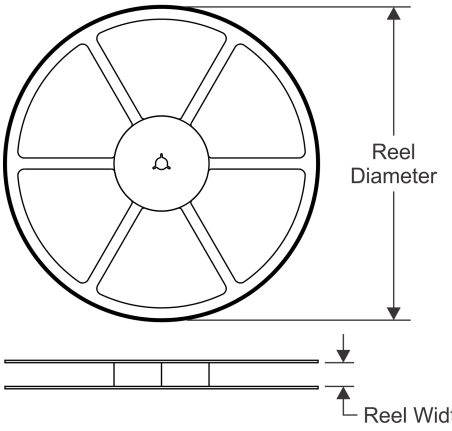

TAPE DIMENSIONS

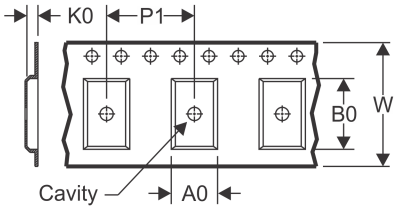

A0	Dimension designed to accommodate the component width
B0	Dimension designed to accommodate the component length
K0	Dimension designed to accommodate the component thickness
W	Overall width of the carrier tape
P1	Pitch between successive cavity centers

QUADRANT ASSIGNMENTS FOR PIN 1 ORIENTATION IN TAPE

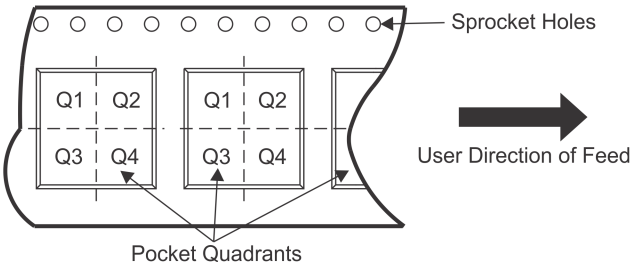

*All dimensions are nominal

Device	Package Type	Package Drawing	Pins	SPQ	Reel Diameter (mm)	Reel Width W1 (mm)	A0 (mm)	B0 (mm)	K0 (mm)	P1 (mm)	W (mm)	Pin1 Quadrant
INA199B1QDCKRQ1	SC70	DCK	6	3000	178.0	9.0	2.4	2.5	1.2	4.0	8.0	Q3
INA199B2QDCKRQ1	SC70	DCK	6	3000	178.0	9.0	2.4	2.5	1.2	4.0	8.0	Q3
INA199B3QDCKRQ1	SC70	DCK	6	3000	178.0	9.0	2.4	2.5	1.2	4.0	8.0	Q3
INA199C1QDCKRQ1	SC70	DCK	6	3000	178.0	9.0	2.4	2.5	1.2	4.0	8.0	Q3
INA199C2QDCKRQ1	SC70	DCK	6	3000	178.0	9.0	2.4	2.5	1.2	4.0	8.0	Q3
INA199C3QDCKRQ1	SC70	DCK	6	3000	178.0	9.0	2.4	2.5	1.2	4.0	8.0	Q3

TAPE AND REEL BOX DIMENSIONS

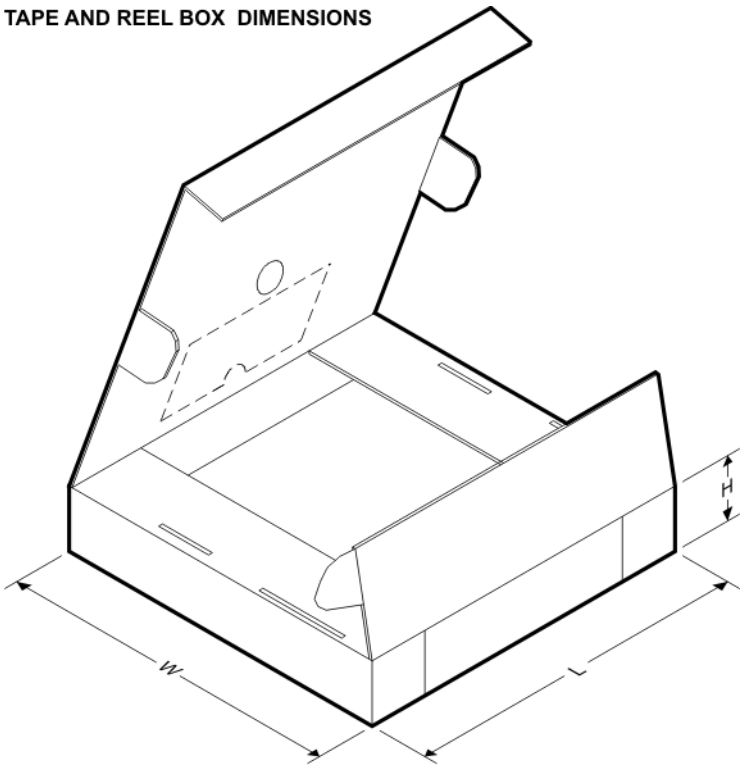

*All dimensions are nominal

Device	Package Type	Package Drawing	Pins	SPQ	Length (mm)	Width (mm)	Height (mm)
INA199B1QDCKRQ1	SC70	DCK	6	3000	180.0	180.0	18.0
INA199B2QDCKRQ1	SC70	DCK	6	3000	180.0	180.0	18.0
INA199B3QDCKRQ1	SC70	DCK	6	3000	180.0	180.0	18.0
INA199C1QDCKRQ1	SC70	DCK	6	3000	180.0	180.0	18.0
INA199C2QDCKRQ1	SC70	DCK	6	3000	180.0	180.0	18.0
INA199C3QDCKRQ1	SC70	DCK	6	3000	180.0	180.0	18.0

DCK (R–PDSO–G6) PLASTIC SMALL–OUTLINE PACKAGE

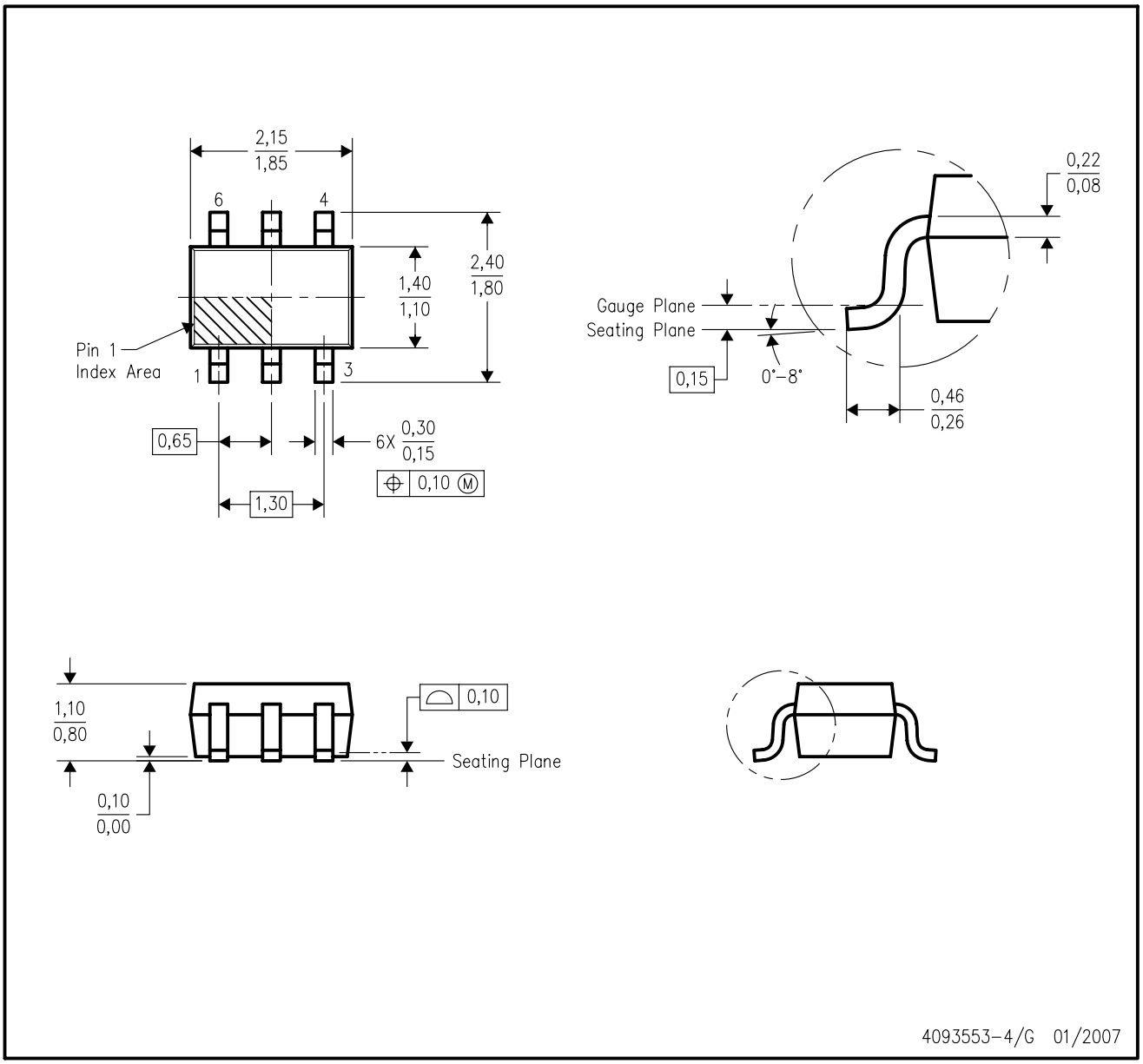

NOTES:
A. All linear dimensions are in millimeters.
B. This drawing is subject to change without notice.
C. Body dimensions do not include mold flash or protrusion. Mold flash and protrusion shall not exceed 0.15 per side.
D. Falls within JEDEC MO–203 variation AB.

DCK (R-PDSO-G6) PLASTIC SMALL OUTLINE

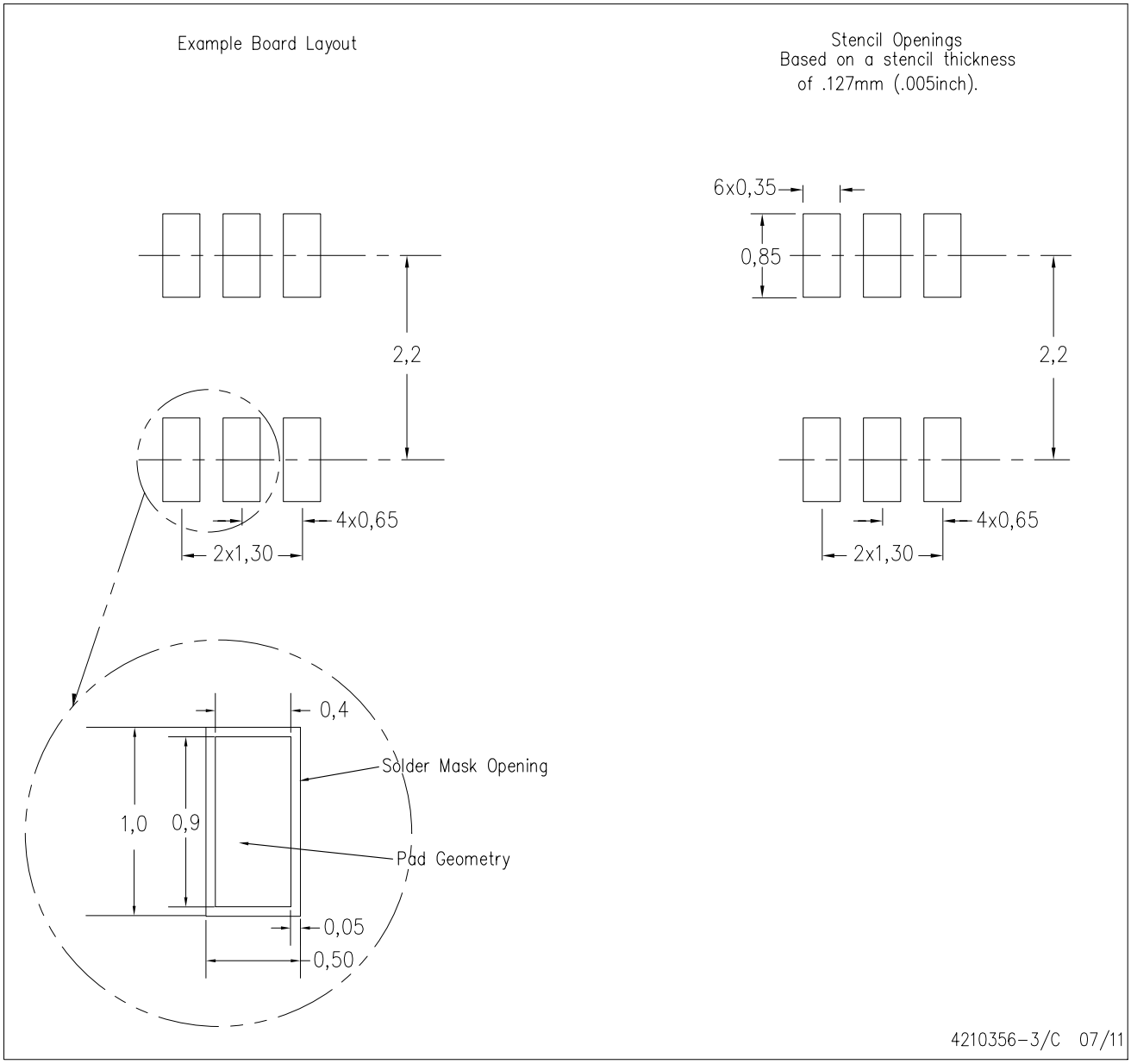

NOTES:
A. All linear dimensions are in millimeters.
B. This drawing is subject to change without notice.
C. Customers should place a note on the circuit board fabrication drawing not to alter the center solder mask defined pad.
D. Publication IPC-7351 is recommended for alternate designs.
E. Laser cutting apertures with trapezoidal walls and also rounding corners will offer better paste release. Customers should contact their board assembly site for stencil design recommendations. Example stencil design based on a 50% volumetric metal load solder paste. Refer to IPC-7525 for other stencil recommendations.

重要声明和免责声明

TI 提供技术和可靠性数据（包括数据表）、设计资源（包括参考设计）、应用或其他设计建议、网络工具、安全信息和其他资源，不保证没有瑕疵且不做出任何明示或暗示的担保，包括但不限于对适销性、某特定用途方面的适用性或不侵犯任何第三方知识产权的暗示担保。

这些资源可供使用 TI 产品进行设计的熟练开发人员使用。您将自行承担以下全部责任：(1) 针对您的应用选择合适的 TI 产品，(2) 设计、验证并测试您的应用，(3) 确保您的应用满足相应标准以及任何其他安全、安保或其他要求。这些资源如有变更，恕不另行通知。TI 授权您仅可将这些资源用于研发本资源所述的 TI 产品的应用。严禁对这些资源进行其他复制或展示。您无权使用任何其他 TI 知识产权或任何第三方知识产权。您应全额赔偿因在这些资源的使用中对 TI 及其代表造成的任何索赔、损害、成本、损失和债务，TI 对此概不负责。

TI 提供的产品受 TI 的销售条款 (https:www.ti.com.cn/zh-cn/legal/termsofsale.html) 或 ti.com.cn 上其他适用条款/TI 产品随附的其他适用条款的约束。TI 提供这些资源并不会扩展或以其他方式更改 TI 针对 TI 产品发布的适用的担保或担保免责声明。

邮寄地址：上海市浦东新区世纪大道 1568 号中建大厦 32 楼，邮政编码：200122
Copyright © 2021 德州仪器半导体技术（上海）有限公司