具有轻载效率优化的单相脉宽调制 (PWM) 控制器

特性

- **1.5V** 至 **19V** 转换电压范围
- **4.5V** 至 **14V** 电源电压范围
- 电压模式控制
- 针对效率优化的轻负载跳跃模式
- 高精度 **0.5%** 内部 **0.8V** 基准
- **0.8V** 至 **0.7 × V_{IN}** 的可调输出电压
- 内部软启动
- 支持预偏置启动
- 支持软启动
- 从 **250kHz** 至 **1MHz** 的可编程开关频率
- 过流保护
- 针对过流的电感器直流电阻 **(DCR)** 感测
- 针对零电流检测的 **$R_{DS(on)}$** 感测
- 过压和欠压保护
- 开漏电源正常输出
- 内部自举开关
- 由 **VCCDR** 供电的集成高电流驱动器
- 小型 **3 mm x 3 mm** 的 **16** 引脚四方扁平无引线 **(QFN)** 封装

应用范围

- 服务器和台式机子系统电源
- **DDR** 内存和端接电源
- 分布式电源
- 通用直流/直流转换器

描述

TPS53211 是一款具有集成高电流驱动器的单相位 PWM 控制器。 它用于 1.5V 到最高 19V 的转换电压。

TPS53211 特有一个跳跃模式解决方案，此解决方案在无需增加输出电压纹波的情况下可优化轻负载条件下的效率。 此器件提供预偏置启动，软停止，集成自举开关，电源正常功能，EN / 输入欠压闭锁 (UVLO) 保护。 它支持高达 19 V 的转换电压，以及 0.8V 至 0.7V × V_{IN} 的输出电压可调范围。

TPS53211 采用 3mm × 3mm，16 引脚，QFN 封装（符合绿色环保 RoHs 标准且无铅），并且可在 -40° C 到 85°C 的温度范围内额定运行。

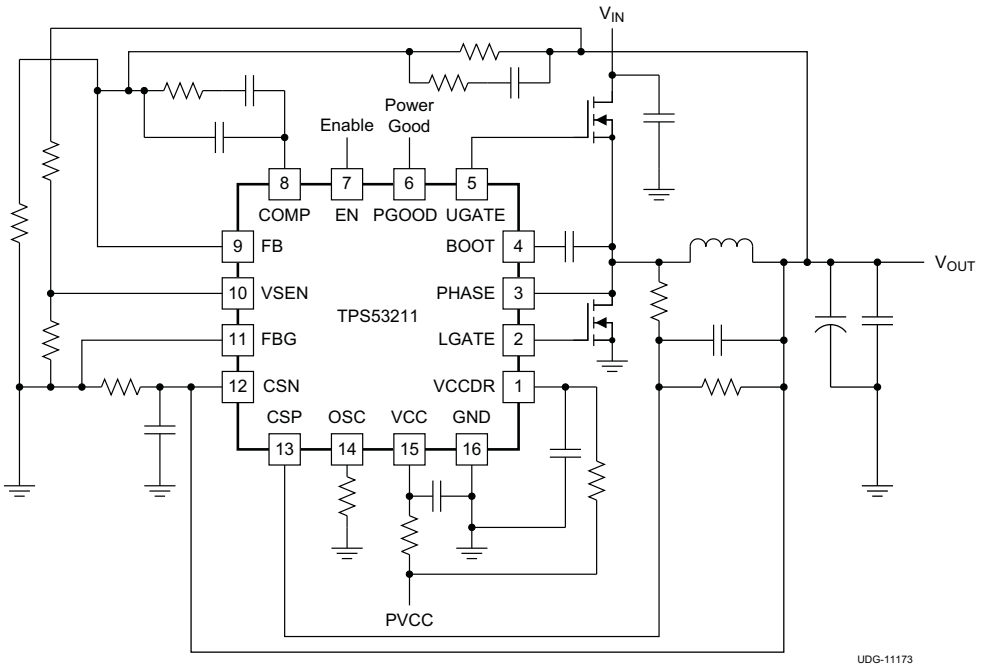

Please be aware that an important notice concerning availability, standard warranty, and use in critical applications of Texas Instruments semiconductor products and disclaimers thereto appears at the end of this data sheet.

PRODUCTION DATA information is current as of publication date. Products conform to specifications per the terms of the Texas Instruments standard warranty. Production processing does not necessarily include testing of all parameters.

Copyright © 2011–2012, Texas Instruments Incorporated

English Data Sheet: SLUSAA9

These devices have limited built-in ESD protection. The leads should be shorted together or the device placed in conductive foam during storage or handling to prevent electrostatic damage to the MOS gates.

ORDERING INFORMATION

TA	PACKAGE	ORDERABLE DEVICE NUMBER	PINS	OUTPUT SUPPLY	MINIMUM QUANTITY	ECO PLAN
–40°C to 85°C	Plastic QFN (RGT)	TPS53211RGTR	16	Tape and Reel	3000	Green (RoHS and no Pb/Br)
		TPS53211RGTT		Mini Reel	250	

ABSOLUTE MAXIMUM RATINGS(1)

over operating free-air temperature range (unless otherwise noted)

			MIN	MAX	UNITS
Input voltage range(2)	VCC, EN		–0.3	15	V
	VCCDR		–0.3	7.7	
	BOOT	dc	–0.3	36	
	BOOT to PHASE	dc	–0.3	7.7	
		transient < 200 ns	–5	7.7	
	PHASE	dc	–3	26	
		transient < 200 ns	–5	30	
	FB, VSEN, OSC		–0.3	3.6	
	CSP, CSN	V_{VCC} > 7.5 V	–0.7	6	
		V_{VCC} ≤ 7.5 V	–0.7	VCC-1.5	
Output voltage range(3)	UGATE		–0.3	36	V
	UGATE to PHASE, LGATE	dc	–0.3	7.7	
		transient < 200 ns	–5	7.7	
	COMP		–0.3	3.6	
	PGOOD		–0.3	15	
Ground pins	GND		–0.3	0.3	V
	FBG		–0.3	0.3	
Electrostatic discharge	Human Body Model (HBM)			1500	V
	Charged Device Model (CDM)			500	
Storage junction temperature			–55	150	°C
Operating junction temperature			–40	150	°C

(1) Stresses beyond those listed under absolute maximum ratings may cause permanent damage to the device. These are stress ratings only and functional operation of the device at these or any other conditions beyond those indicated under recommended operating conditions is not implied. Exposure to absolute-maximum-rated conditions for extended periods may affect device reliability.
(2) All voltage values are with respect to the network ground terminal unless otherwise noted.
(3) Voltage values are with respect to the SW terminal.

THERMAL INFORMATION

THERMAL METRIC(1)		TPS53211 QFN 16 PINS	UNITS
θ_{JA}	Junction-to-ambient thermal resistance	51.3	°C/W
θ_{JCtop}	Junction-to-case (top) thermal resistance	85.4	
θ_{JB}	Junction-to-board thermal resistance	20.1	
ψ_{JT}	Junction-to-top characterization parameter	1.3	
ψ_{JB}	Junction-to-board characterization parameter	19.4	
θ_{JCbot}	Junction-to-case (bottom) thermal resistance	6	

(1) 有关传统和新的热 度量的更多信息，请参阅*IC 封装热度量*应用报告， SPRA953。

Copyright © 2011–2012, Texas Instruments Incorporated

RECOMMENDED OPERATING CONDITIONS

			MIN	TYP	MAX	UNITS
Input voltage range	VCC		4.5		14	V
	EN		–0.1		V_{VCC}+0.1	
	VCCDR		4.5		7	
	BOOT	dc	–0.1		34	
	BOOT to PHASE	dc	–0.1		7	
		transient < 200ns	–3		7	
	PHASE	dc	–1		24	
		transient < 200ns	–3		28	
	FB, VSEN, OSC		–0.1		3.3	
	CSP, CSN	V_{VCC} > 7.5 V	–0.1		5.5	
		V_{VCC} ≤ 7.5 V	–0.1		V_{VCC}–2	
Output voltage range	UGATE		–0.1		34	V
	UGATE to PHASE, LGATE	dc	–0.1		7	
		transient < 200 ns	–3		7	
	COMP		–0.1		3.3	
	PGOOD		–0.1		12	
Ground pins	GND		–0.1		0.1	
	FBG		–0.1		0.1	
Junction temperature range, T_J			–40		125	°C
Operating free-air temperature, T_A			–40		85	°C

Copyright © 2011–2012, Texas Instruments Incorporated

ELECTRICAL CHARACTERISTICS(1)

over operating free-air temperature range, VCC = 12V, PGND = GND (unless otherwise noted)

PARAMETER		TEST CONDITIONS	MIN	TYP	MAX	UNIT
INPUT SUPPLY						
V_{VCC}	VCC supply voltage	Nominal input voltage range	4.5		12	V
V_{POR}	VCC POR threshold	Ramp up; EN ='HI'	4.1	4.25	4.4	V
V_{PORHYS}	VCC POR hysteresis	VCCDR POR hysteresis		200		mV
I_{CC_STBY}	Standby current	EN pin is low. V_{VCC}= 12 V			60	µA
R_{Boot}	Rds(on) of the boot strap switch			10		Ω
DRIVER SUPPLY						
V_{CCDR}	VCCDR Supply voltage	Nominal input voltage range	4.5		7.0	V
V_{PORDR}	VCCDR POR threshold	Ramp up; EN ='HI'	3.15	3.32	3.50	V
$V_{PORHYSDR}$	VCCDR POR hysteresis	VCCDR POR hysteresis		220		mV
I_{CCDR_STBY}	Standby current	EN pin is low. V_{VCC} = 12 V			100	µA
REFERENCE						
V_{VREF}	VREF	Internal precision reference voltage		0.8		V
TOL_{VREF}	VREF tolerance	Close loop trim. 0°C ≤ T_J ≤ 70°C	–0.5%		0.5%	
ERROR AMPLIFIER						
UGBW(2)	Unity gain bandwidth		14			MHz
AOL(2)	Open loop gain		80			dB
$I_{FB(int)}$	FB Input leakage current	Sourced from FB pin		10		nA
$I_{EA(max)}$	Output sinking and sourcing current			2.5		mA
SR(2)	Slew rate			5		V/µs
ENABLE						
V_{ENH}	EN logic high		2.2			V
V_{ENL}	EN logic low				600	mV
I_{EN}	EN pin current				12	µA
SOFT START						
t_{SS_delay}	Delay after EN asserting	EN = 'HI' to "switching enabled"		1024/f_{SW}		ms
$t_{PGDELAY}$	PGOOD startup delay time	PG delay after soft-start begins		1560/f_{SW}		ms
RAMP						
	Ramp amplitude	4.5V < V_{VCC} < 12 V		2		V
PWM						
$t_{MIN(on)}$(2)	Minimum ON time		40			ns
D_{MAX}(2)	Maximum duty cycle	f_{SW} = 1 MHz	70%			
SWITCHING FREQUENCY						
$f_{SW(typ)}$	Typical switching frequency	R_{OSC} = 61.9 kΩ	360	400	440	kHz
$f_{SW(min)}$	Minumum switching frequency	R_{OSC} = 250 kΩ		250		kHz
$f_{SW(max)}$	Maximum switching frequency	R_{OSC} = 14 kΩ		1		MHz
$f_{SW(tol)}$	Switching frequency tolerance	R_{OSC} > 12.4 kΩ	–20%		20%	
OVERCURRENT						
V_{OC_TH}	CSP-CSN threshold for DCR sensing	T_A = 25°C	17	20	23	mV

(1) See PS pin description for levels.
(2) Ensured by design. Not production tested.

Copyright © 2011–2012, Texas Instruments Incorporated

ELECTRICAL CHARACTERISTICS[1] (continued)

over operating free-air temperature range, VCC = 12V, PGND = GND (unless otherwise noted)

PARAMETER		TEST CONDITIONS	MIN	TYP	MAX	UNIT
GATE DRIVERS						
R_{HDHI}[3]	High-side driver sourcing resistance	(V_{BOOT} – V_{PH}) forced to 5 V, high state		1		Ω
R_{HDLO}	High-side driver sinking resistance	(V_{BOOT} – V_{PH}) forced to 5 V, low state		0.5		Ω
R_{LDHI}	Low-side driver sourcing resistance	(V_{CCDR}– GND) = 5 V, high state		0.7		Ω
R_{LDLO}	Low-side driver sinking resistance	V_{CCDR}– GND = 5 V, low state		0.33		Ω
POWER GOOD						
V_{PGDL}	PG lower threshold	Measured at VSEN w/r/t VREF		87%	89%	
V_{PGDU}	PG upper threshold	Measured at VSEN w//rt VREF	110%	113%	116%	
V_{PGHYS}	PG hysteresis	Measured at VSEN w/r/t VREF		3.5%		
$t_{OVPGDLY}$	PG delay time at OVP	Time from VSEN out of +12.5% of VREF to PG low		2.3		µs
$t_{UVPGDLY}$	PG delay time at UVP	Time from VSEN out of –12.5% of VREF to PG low		2.3		µs
$V_{INMINPG}$	Minimum V_{CC} voltage for valid PG at startup.	Measured at V_{VCC} with 1 mA (or 2 mA) sink current on PG pin at startup.		1		V
V_{PGPD}	PG pull-down voltage	Pull down voltage with 4 mA sink current		0.2	0.4	V
I_{PGLK}	PG leakage current	Hi-Z leakage current, apply 6.5 V in off state	7.8	12	16.2	µA
OUTPUT OVERVOLTAGE AND UNDERVOLTAGE PROTECTION						
V_{OVth}	OVP threshold	Measured at the VSEN wrt. VREF.	110%	113%	116%	
V_{UVth}	UVP threshold	Measured at the VSEN wrt. VREF.		87%	89%	
t_{OVPDLY}	OVP delay time	Time from VSEN out of +12.5% of VREF to OVP fault		2.3		µs
t_{UVPDLY}[3]	UVP delay time	Time from VSEN out of –12.5% of VREF to UVP fault		80		µs
THERMAL SHUTDOWN						
THSD[3]	Thermal shutdown	Latch off controller, attempt soft-stop	130	140	150	°C
$THSD_{HYS}$[3]	Thermal shutdown hysteresis	Controller starts again after temperature has dropped		40		°C

(3) Ensured by design. Not production tested.

Copyright © 2011–2012, Texas Instruments Incorporated

DEVICE INFORMATION

TPS53211
16 PINS
(TOP VIEW)

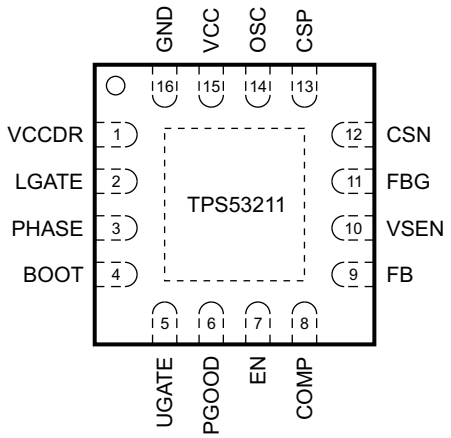

PIN FUNCTIONS

PIN		I/O	DESCRIPTION
NAME	NO.		
BOOT	4	I	Supply input for high-side drive (boot strap pin). Connect capacitor from this pin to SW pin
COMP	8	O	Error amplifier compensation terminal. Type III compensation method is generally recommended for stability.
CSN	12	I	Current sense negative input.
CSP	13	I	Current sense positive input
EN	7	I	Enable.
FB	9	I	Voltage feedback. Use for OVP, UVP and PGD determination.
FBG	11	G	Feedback ground for output voltage sense.
GND	16	G	Logic ground and low-side gate drive return.
PHASE	3	O	Output inductor connection to integrated power devices.
LGATE	2	O	Low-side gate drive output.
OSC	14	O	Frequency programming input.
PGOOD	6	O	Power good output flag. Open drain output. Pull up to an external rail via a resistor.
UGATE	5	O	High-side gate drive output.
VCC	15	I	Supply input for analog control circuitry.
VCCDR	1	I/O	Bias voltage for integrated drivers.
VSEN	10	I	Output voltage sense

Copyright © 2011–2012, Texas Instruments Incorporated

FUNCTIONAL BLOCK DIAGRAM

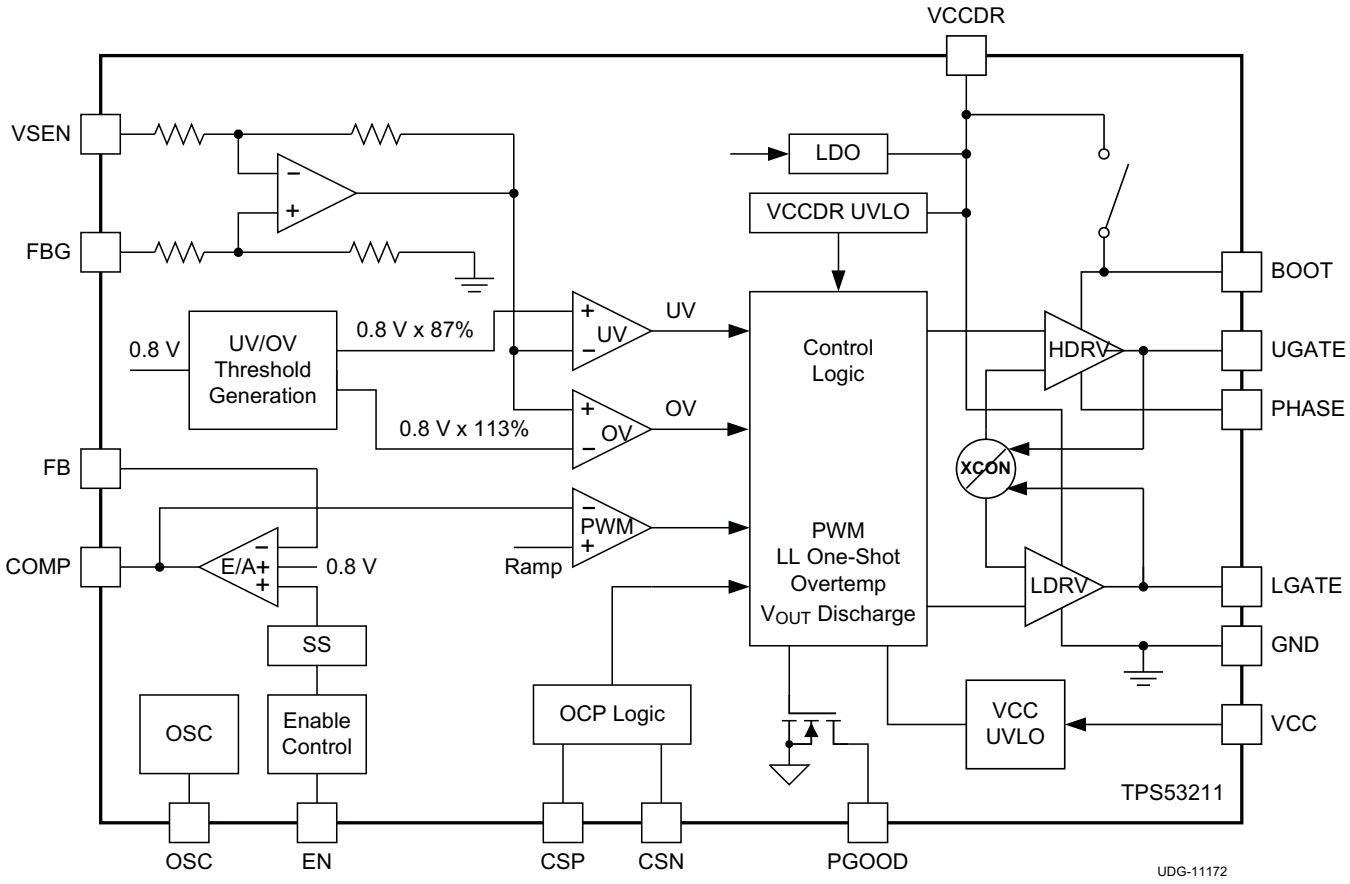

TYPICAL CHARACTERISTICS

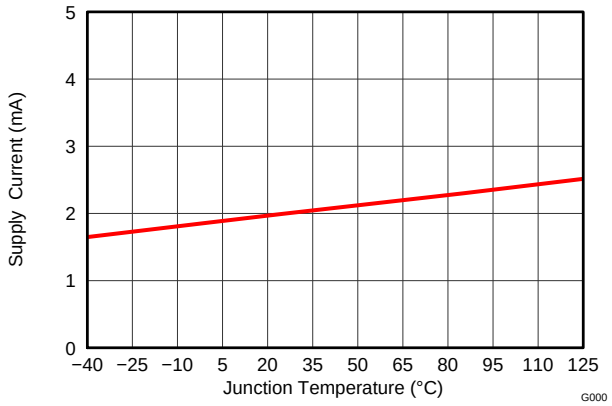

Figure 1. VCC Current vs. Junction Temperature

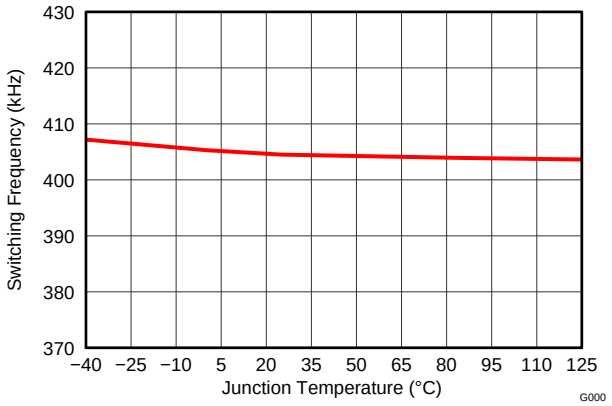

Figure 2. Switching Frequency vs. Junction Temperature

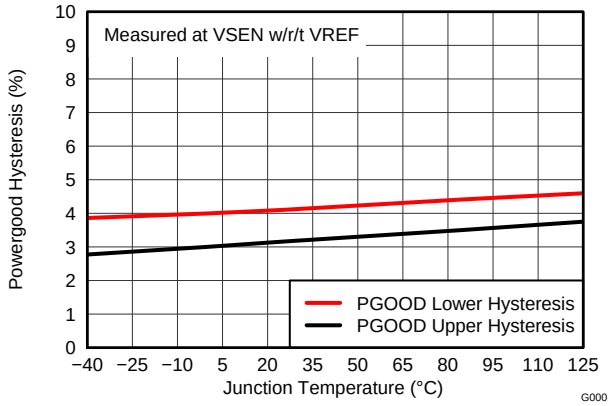

Figure 3. Power Good Hysteresis vs. Junction Temperature

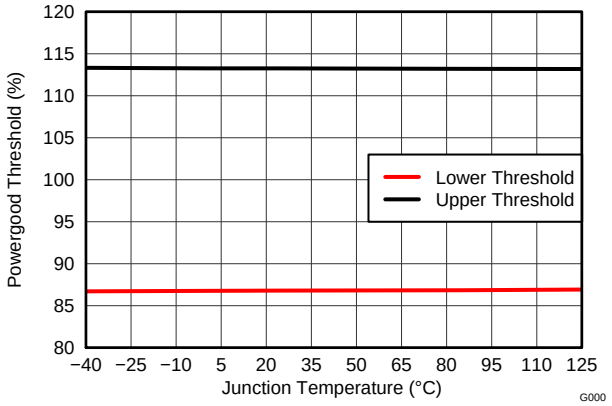

Figure 4. Power Good Threshold vs. Junction Temperature

Copyright © 2011–2012, Texas Instruments Incorporated

DETAILED DESCRIPTION

Introduction

The TPS53211 is a single-channel synchronous buck controller with integrated high-current drivers. The TPS53211 is used for 1.5 V up to 19 V conversion voltage, and provides output voltage from 0.8 V to 0.7 V_{IN}. It operates with programmable switching frequency ranging from 250 kHz to 1 MHz.

This device employs a skip mode solution that optimizes the efficiency at light-load condition without compromising the output voltage ripple. The device provides pre-bias startup, integrated bootstrap switch, power good function, EN/Input UVLO protection. The TPS53211 is available in the 3 mm by 3mm 16-pin QFN package and is specified from –40°C to 85°C.

Switching Frequency Setting

The clock frequency is programmed by the value of the resistor connected from the OSC pin to ground. The switching frequency is programmable from 250 kHz to 1 MHz. The relation between the frequency and the OSC resistance is given by Equation 1.

$$f_{SW} = 200 + \frac{10^6}{(R_{OSC} \times 78.5) + 150}$$

where

- R_{OSC} is the resistor connected from the OSC pin to ground in kΩ
- f_{SW} is the desired switching frequency in kHz (1)

Soft-Start Function

The soft-start function reduces the inrush current during the start-up. A slow rising reference voltage is generated by the soft-start circuitry and sent to the input of the error amplifier. When the soft-start ramp voltage is less than 800 mV, the error amplifier uses this ramp voltage as the reference. When the ramp voltage reaches 800 mV, a fixed 800 mV reference voltage is utilized for the error amplifier. The soft-start function is implemented only when VCC and VCCDR are above the respective UVLO thresholds and the EN pin is released.

When the soft-start begins, the device initially waits for 1024 clock cycles and then starts to ramp up the reference. After the reference voltage begins to rise, the PGOOD signal goes high after a 1560 clock-cycle delay.

UVLO Function

The TPS53211 provides UVLO protection for the input supply (VCC) and driver supply (VCCDR). If the supply voltage is lower than UVLO threshold voltage minus the hysteresis, the device shuts off. When the voltage rises above the threshold voltage, the device restarts. The typical UVLO rising threshold is 4.25 V for VCC and 3.32 V for VCCDR. Hysteresis of 200 mV for VCC and 220 mV for VCCDR are also provided to prevent glitch.

Overcurrent Protection

The TPS53211 continuously monitors the current flowing through the inductor. The inductor DCR current sense is implemented by comparing and monitoring the difference between the CSP and CSN pins. DCR current sensing requires time constant matching between the inductor and the sensing network:

$$\frac{L}{DCR} = R \times C \quad (2)$$

TPS53211 has two level OC thresholds: 20 mV and 30 mV for the voltage between the CSP and CSN pins.

If the voltage between the CSP and CSN pins exceeds the 20 mV current limit threshold, an OC counter starts to increment to count the occurrence of the overcurrent events. The converter shuts down immediately when the OC counter reaches four (4). The OC counter resets if the detected current is lower than the OC threshold after an OC event. Normal operation can only be restored by cycling the VCC voltage.

If the voltage between the CSP and CSN pins is higher than 30 mV, the device latches off immediately. Normal operation can be restored only by cycling the VCC voltage.

Copyright © 2011–2012, Texas Instruments Incorporated

The TPS53211 has thermal compensation to adjust the OCP threshold in order to reduce the influence of inductor DCR variation due to temperature change. The OCP level has a change rate of 0.35%/°C.

Overvoltage and Undervoltage Protection

The TPS53211 monitors the VSEN pin voltage to detect the overvoltage and undervoltage conditions. A resistor divider with the same ratio as on the FB input is recommended for the VSEN input. The overvoltage and undervoltage thresholds are set to ±13% of V_{OUT}.

When the VSEN voltage is greater than 113% of the reference, the overvoltage protection is activated. The high-side MOSFET turns off and the low-side MOSFET turns on. Normal operation can be restored only by cycling the VCC pin voltage.

When the VSEN voltage is lower than 87% of the reference voltage, the undervoltage protection is triggered and the PGOOD signal goes low. After 80 µs, the controller is latched off with both the upper and lower MOSFETs turned off.

After both the undervoltage and overvoltage events, the device is latched off. Normal operation can be restored only by cycling the VCC pin voltage.

Power Good

The TPS53211 monitors the output voltage through the VSEN. During start up, the power good signal delay after the reference begins to rise is 1560 clock cycles. After this delay, if the output voltage is within ±9.5% of the target value, PGOOD signal goes high.

At steady state, if the VSEN voltage is within 113% and 87% of the reference voltage, the power good signal remains high. If VSEN voltage is outside of this limit, PGOOD pin is pulled low by the internal open drain output. The PGOOD output is an open drain and requires an external pull-up resistor.

Over-Temperature Protection

The TPS53211 continuously monitors the die temperature. If the die temperature exceeds the threshold value (140˚C typical), the device shuts off. When the device temperature lowers to 40˚C below the over-temperature threshold, it restarts and return to normal operation.

Copyright © 2011–2012, Texas Instruments Incorporated

APPLICATION INFORMATION

The following example illustrates the design process and component selection for a single output synchronous buck converter using TPS53211. The schematic of a design example is shown in Figure 5. The specifications of the converter are listed in Table 1.

Table 1. Specification of the Single Output Synchronous Buck Converter

PARAMETER		TEST CONDITION	MIN	TYP	MAX	UNIT
V_{IN}	Input voltage		10.8	12	13.2	V
V_{OUT}	Output voltage			1.05		V
V_{RIPPLE}	Output ripple	I_{OUT} = 20 A		1% of V_{OUT}		V
I_{OUT}	Output current			20		A
f_{SW}	Switching frequency			400		kHz

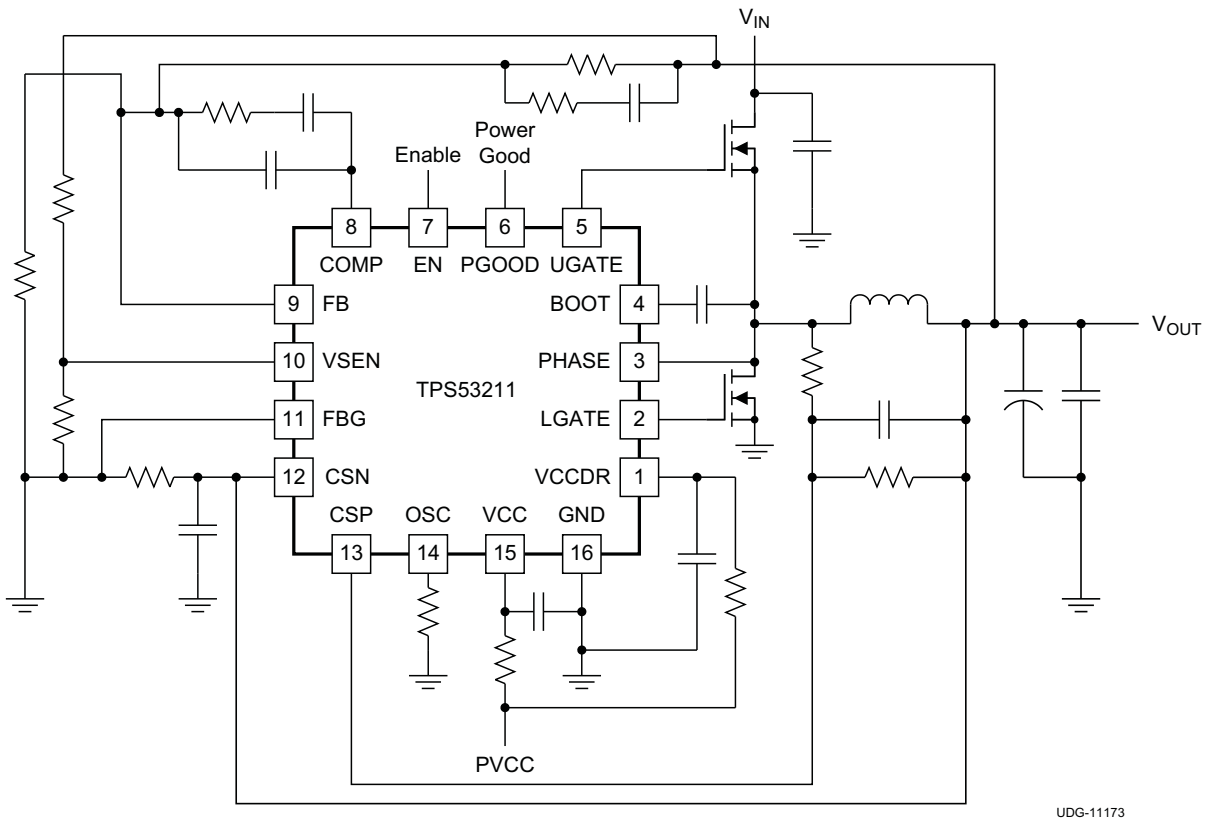

Figure 5. Typical 12-V Input Application Circuit

Output Inductor Selection

Determine an inductance value that yields a ripple current of approximately 20% to 40% of maximum output current. The inductor ripple current is determined by Equation 3:

$$I_{L(ripple)} = \frac{1}{L \times f_{SW}} \times \frac{(V_{IN} - V_{OUT}) \times V_{OUT}}{V_{IN}} \quad (3)$$

The inductor requires a low DCR to achieve good efficiency, as well as enough room above peak inductor current before saturation.

Copyright © 2011–2012, Texas Instruments Incorporated

Output Capacitor Selection

The output capacitor selection is determined by output ripple and transient requirement. When operating in CCM, the output ripple has three components:

$$V_{RIPPLE} = V_{RIPPLE(C)} + V_{RIPPLE(ESR)} + V_{RIPPLE(ESL)} \tag{4}$$

$$V_{RIPPLE(C)} = \frac{I_{L(ripple)}}{8 \times C_{OUT} \times f_{SW}} \tag{5}$$

$$V_{RIPPLE(ESR)} = I_{L(ripple)} \times ESR \tag{6}$$

$$V_{RIPPLE(ESL)} = \frac{V_{IN} \times ESL}{L} \tag{7}$$

When a ceramic output capacitor is chosen, the ESL component is usually negligible. In the case when multiple output capacitors are used, the total ESR and ESL should be the equivalent of the all output capacitors in parallel.

When operating in DCM, the output ripple is dominated by the component determined by capacitance. It also varies with load current and can be expressed as shown in Equation 8.

$$V_{RIPPLE(DCM)} = \frac{\left(\alpha \times I_{L(ripple)} - I_{OUT}\right)^2}{2 \times f_{SW} \times C_{OUT} \times I_{L(ripple)}}$$

where

- α is the DCM On-Time coefficient and can be expressed as $\alpha = \frac{t_{ON(dcm)}}{t_{ON(ccm)}}$ (8)

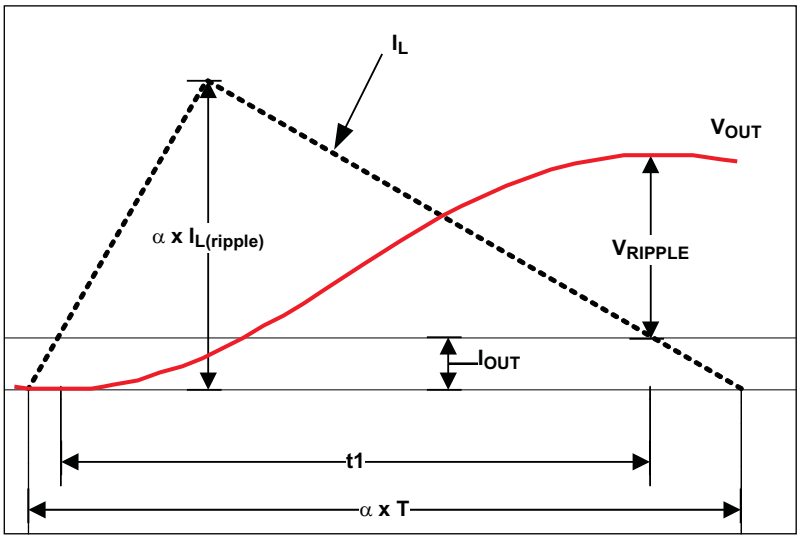

UDG-11174

Figure 6. DCM V_{OUT} Ripple Calculation

Copyright © 2011–2012, Texas Instruments Incorporated

Input Capacitor Selection

The selection of input capacitor should be determined by the ripple current requirement. The ripple current generated by the converter needs to be absorbed by the input capacitors as well as the input source. The RMS ripple current from the converter can be expressed as:

$$I_{IN(ripple)} = I_{OUT} \times \sqrt{D \times (1 - D)}$$

where

- D is the duty cycle and can be expressed as $D = \frac{V_{OUT}}{V_{IN}}$ (9)

To minimize the ripple current drawn from the input source, sufficient input decoupling capacitors should be placed close to the device. The ceramic capacitor is recommended due to the inherent low ESR and low ESL. The input voltage ripple can be calculated as below when the total input capacitance is determined:

$$V_{IN(ripple)} = \frac{I_{OUT} \times D}{f_{SW} \times C_{IN}} \tag{10}$$

Output Voltage Setting Resistors Selection

The output voltage is programmed by the voltage-divider resistor, R1 and R2 shown in Figure 7. R1 is connected between FB pin and the output, and R2 is connected between the FB pin and FBG. The recommended value for R1 is between 1 kΩ and 5 kΩ. Determine R2 using Equation 11.

$$R1 = \left(\frac{0.8}{(V_{OUT} - 0.8)} \right) \times R1 \tag{11}$$

Compensation Design

The TPS53211 employs voltage mode control. To effectively compensation the power stage and ensures fast transient response, Type III compensation is typically used.

The control to output transfer function can be described in Equation 12.

$$G_{CO} = 4 \times \frac{1 + s \times C_{OUT} \times ESR}{1 + s \times \left(\frac{L}{DCR + R_{LOAD}} + C_{OUT} \times (ESR + DCR) \right) + s^2 \times L \times C_{OUT}} \tag{12}$$

The output LC filter introduces a double pole, calculated in Equation 13.

$$f_{DP} = \frac{1}{2 \times \pi \times \sqrt{L \times C_{OUT}}} \tag{13}$$

The ESR zero of can be calculated calculated in Equation 14

$$f_{ESR} = \frac{1}{2 \times \pi \times ESR \times C_{OUT}} \tag{14}$$

Copyright © 2011–2012, Texas Instruments Incorporated

Figure 7 shows the configuration of Type III compensation and typical pole and zero locations. Equation 15 through Equation 17 describe the compensator transfer function and poles and zeros of the Type III network.

$$G_{EA} = \frac{(1 + s \times C_1 \times (R_1 + R_3))(1 + s \times R_4 \times C_2)}{(s \times R_1 \times (C_2 + C_3)) \times (1 + s \times C_1 \times R_3) \times \left(1 + s \times R_4 \frac{C_2 \times C_3}{C_2 + C_3}\right)} \tag{15}$$

$$f_{Z1} = \frac{1}{2 \times \pi \times R_4 \times C_2} \tag{16}$$

$$f_{Z2} = \frac{1}{2 \times \pi \times (R_1 + R_3) \times C_1} \cong \frac{1}{2 \times \pi \times R_1 \times C_1} \tag{17}$$

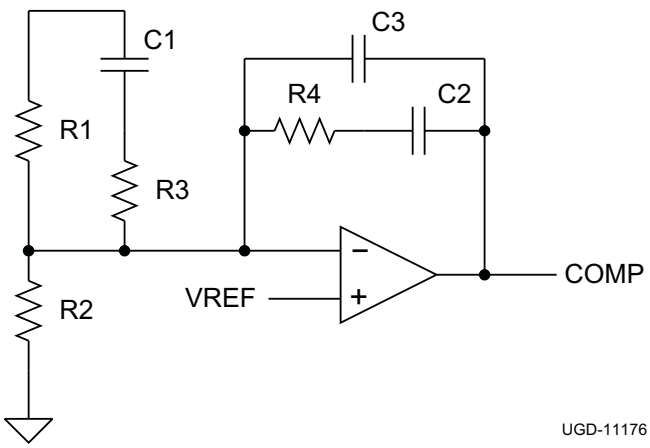

Figure 7. Type III Compensation Network Configuration

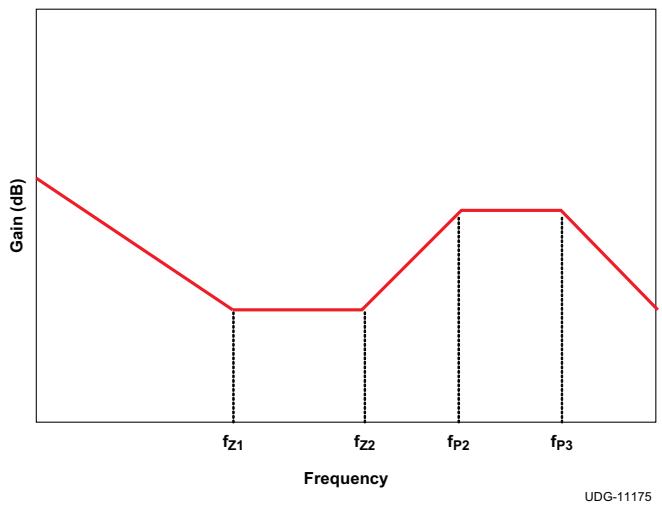

Figure 8. Type III Compensation Network Waveform

$$f_{P1} = 0 \tag{18}$$

$$f_{P2} = \frac{1}{2 \times \pi \times R_3 \times C_1} \tag{19}$$

$$f_{P3} = \frac{1}{2 \times \pi \times R_4 \times \left(\frac{C_2 \times C_3}{C_2 + C_3}\right)} \cong \frac{1}{2 \times \pi \times R_4 \times C_3} \tag{20}$$

The two zeros can be placed near the double pole frequency to cancel the response from the double pole. One pole can be used to cancel ESR zero, and the other non-zero pole can be placed at half switching frequency to attenuate the high frequency noise and switching ripple. Suitable values can be selected to achieve a compromise between high phase margin and fast response. A phase margin higher than 45° is required for stable operation.

Copyright © 2011–2012, Texas Instruments Incorporated

Changes from Original (September 2011) to Revision A **Page**

- Changed Input voltage range condition for CSP and CSN pins in ABSOLUTE MAXIMUM RATINGS table from "V_{VCC} > 6.8" to "V_{VCC} > 7.5" 2
- Changed Input voltage range maximum specification for CSP and CSN pins in ABSOLUTE MAXIMUM RATINGS table from "5.3 V" to "6 V" 2
- Changed Input voltage range condition for CSP and CSN pins in ABSOLUTE MAXIMUM RATINGS table from "V_{VCC} ≤ 6.8" to "V_{VCC} ≤ 7.5" 2
- Changed Input voltage range condition for CSP and CSN pins in RECOMMENDED OPERATING CONDITIONS table from "V_{VCC} > 6.8" to "V_{VCC} > 7.5" 3
- Changed Input voltage range maximum specification for CSP and CSN pins in RECOMMENDED OPERATING CONDITIONS table from "5 V" to "5.5 V" 3
- Changed Input voltage range condition for CSP and CSN pins in RECOMMENDED OPERATING CONDITIONS table from "V_{VCC} > 6.8" to "V_{VCC} > 7.5" 3

Copyright © 2011–2012, Texas Instruments Incorporated

PACKAGING INFORMATION

Orderable Device	Status (1)	Package Type	Package Drawing	Pins	Package Qty	Eco Plan (2)	Lead finish/ Ball material (6)	MSL Peak Temp (3)	Op Temp (°C)	Device Marking (4/5)	Samples
TPS53211RGTR	ACTIVE	VQFN	RGT	16	3000	RoHS & Green	NIPDAU	Level-2-260C-1 YEAR	-40 to 85	53211	Samples
TPS53211RGTT	ACTIVE	VQFN	RGT	16	250	RoHS & Green	NIPDAU	Level-2-260C-1 YEAR	-40 to 85	53211	Samples

(1) The marketing status values are defined as follows:
ACTIVE: Product device recommended for new designs.
LIFEBUY: TI has announced that the device will be discontinued, and a lifetime-buy period is in effect.
NRND: Not recommended for new designs. Device is in production to support existing customers, but TI does not recommend using this part in a new design.
PREVIEW: Device has been announced but is not in production. Samples may or may not be available.
OBSOLETE: TI has discontinued the production of the device.

(2) **RoHS:** TI defines "RoHS" to mean semiconductor products that are compliant with the current EU RoHS requirements for all 10 RoHS substances, including the requirement that RoHS substance do not exceed 0.1% by weight in homogeneous materials. Where designed to be soldered at high temperatures, "RoHS" products are suitable for use in specified lead-free processes. TI may reference these types of products as "Pb-Free".
RoHS Exempt: TI defines "RoHS Exempt" to mean products that contain lead but are compliant with EU RoHS pursuant to a specific EU RoHS exemption.
Green: TI defines "Green" to mean the content of Chlorine (Cl) and Bromine (Br) based flame retardants meet JS709B low halogen requirements of <=1000ppm threshold. Antimony trioxide based flame retardants must also meet the <=1000ppm threshold requirement.

(3) MSL, Peak Temp. - The Moisture Sensitivity Level rating according to the JEDEC industry standard classifications, and peak solder temperature.

(4) There may be additional marking, which relates to the logo, the lot trace code information, or the environmental category on the device.

(5) Multiple Device Markings will be inside parentheses. Only one Device Marking contained in parentheses and separated by a "~" will appear on a device. If a line is indented then it is a continuation of the previous line and the two combined represent the entire Device Marking for that device.

(6) Lead finish/Ball material - Orderable Devices may have multiple material finish options. Finish options are separated by a vertical ruled line. Lead finish/Ball material values may wrap to two lines if the finish value exceeds the maximum column width.

Important Information and Disclaimer: The information provided on this page represents TI's knowledge and belief as of the date that it is provided. TI bases its knowledge and belief on information provided by third parties, and makes no representation or warranty as to the accuracy of such information. Efforts are underway to better integrate information from third parties. TI has taken and continues to take reasonable steps to provide representative and accurate information but may not have conducted destructive testing or chemical analysis on incoming materials and chemicals. TI and TI suppliers consider certain information to be proprietary, and thus CAS numbers and other limited information may not be available for release.

In no event shall TI's liability arising out of such information exceed the total purchase price of the TI part(s) at issue in this document sold by TI to Customer on an annual basis.

TAPE AND REEL INFORMATION

REEL DIMENSIONS

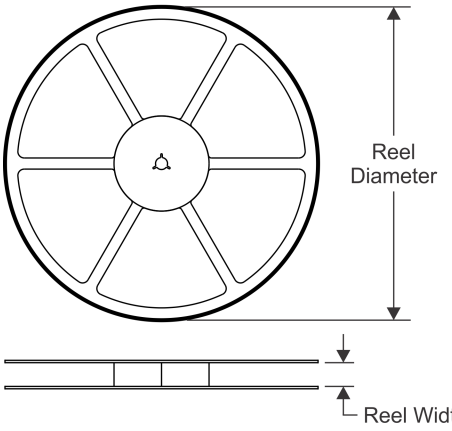

TAPE DIMENSIONS

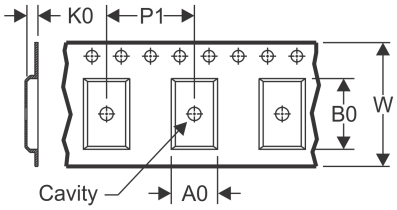

A0	Dimension designed to accommodate the component width
B0	Dimension designed to accommodate the component length
K0	Dimension designed to accommodate the component thickness
W	Overall width of the carrier tape
P1	Pitch between successive cavity centers

QUADRANT ASSIGNMENTS FOR PIN 1 ORIENTATION IN TAPE

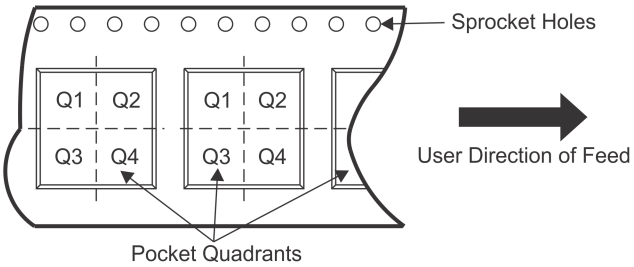

*All dimensions are nominal

Device	Package Type	Package Drawing	Pins	SPQ	Reel Diameter (mm)	Reel Width W1 (mm)	A0 (mm)	B0 (mm)	K0 (mm)	P1 (mm)	W (mm)	Pin1 Quadrant
TPS53211RGTR	VQFN	RGT	16	3000	330.0	12.4	3.3	3.3	1.1	8.0	12.0	Q2
TPS53211RGTT	VQFN	RGT	16	250	180.0	12.4	3.3	3.3	1.1	8.0	12.0	Q2

TAPE AND REEL BOX DIMENSIONS

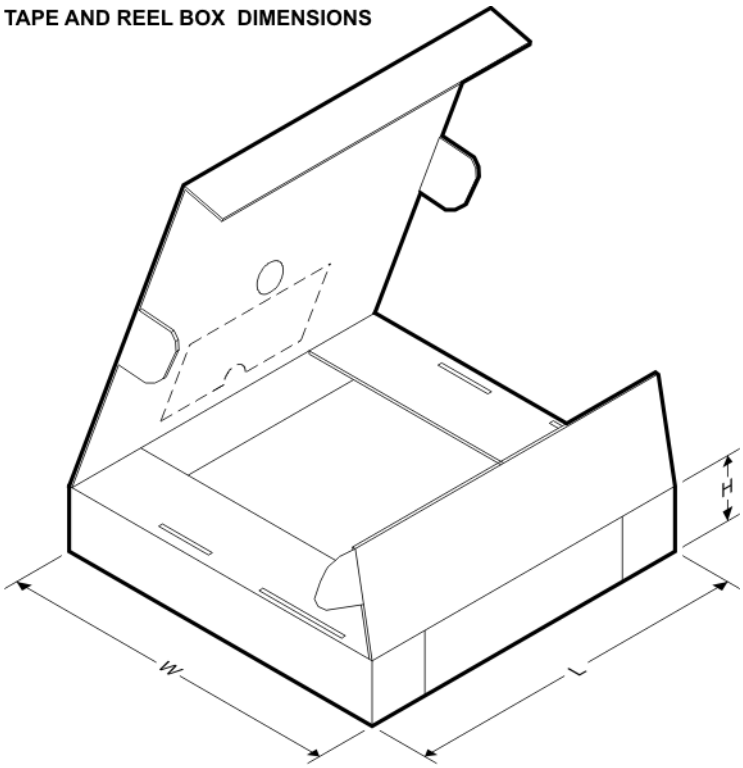

*All dimensions are nominal

Device	Package Type	Package Drawing	Pins	SPQ	Length (mm)	Width (mm)	Height (mm)
TPS53211RGTR	VQFN	RGT	16	3000	367.0	367.0	35.0
TPS53211RGTT	VQFN	RGT	16	250	210.0	185.0	35.0

RGT 16

VQFN - 1 mm max height

PLASTIC QUAD FLATPACK - NO LEAD

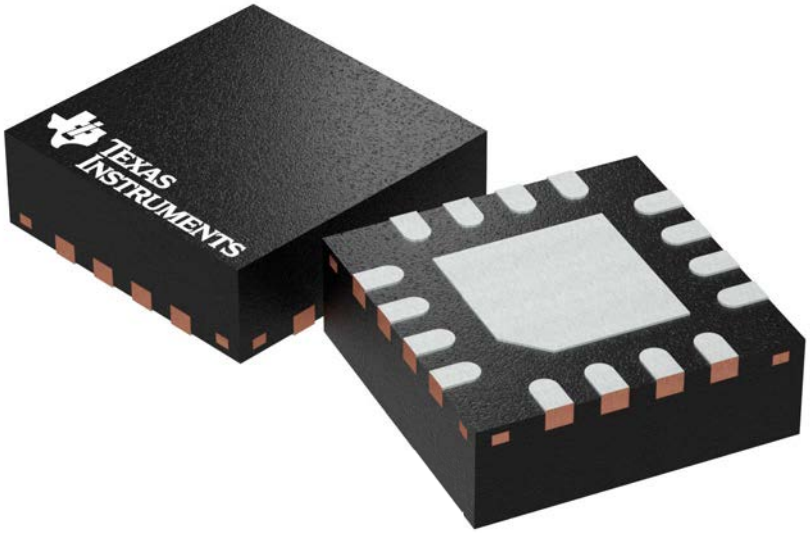

Images above are just a representation of the package family, actual package may vary.
Refer to the product data sheet for package details.

4203495/I

RGT0016C

PACKAGE OUTLINE

VQFN - 1 mm max height

PLASTIC QUAD FLATPACK - NO LEAD

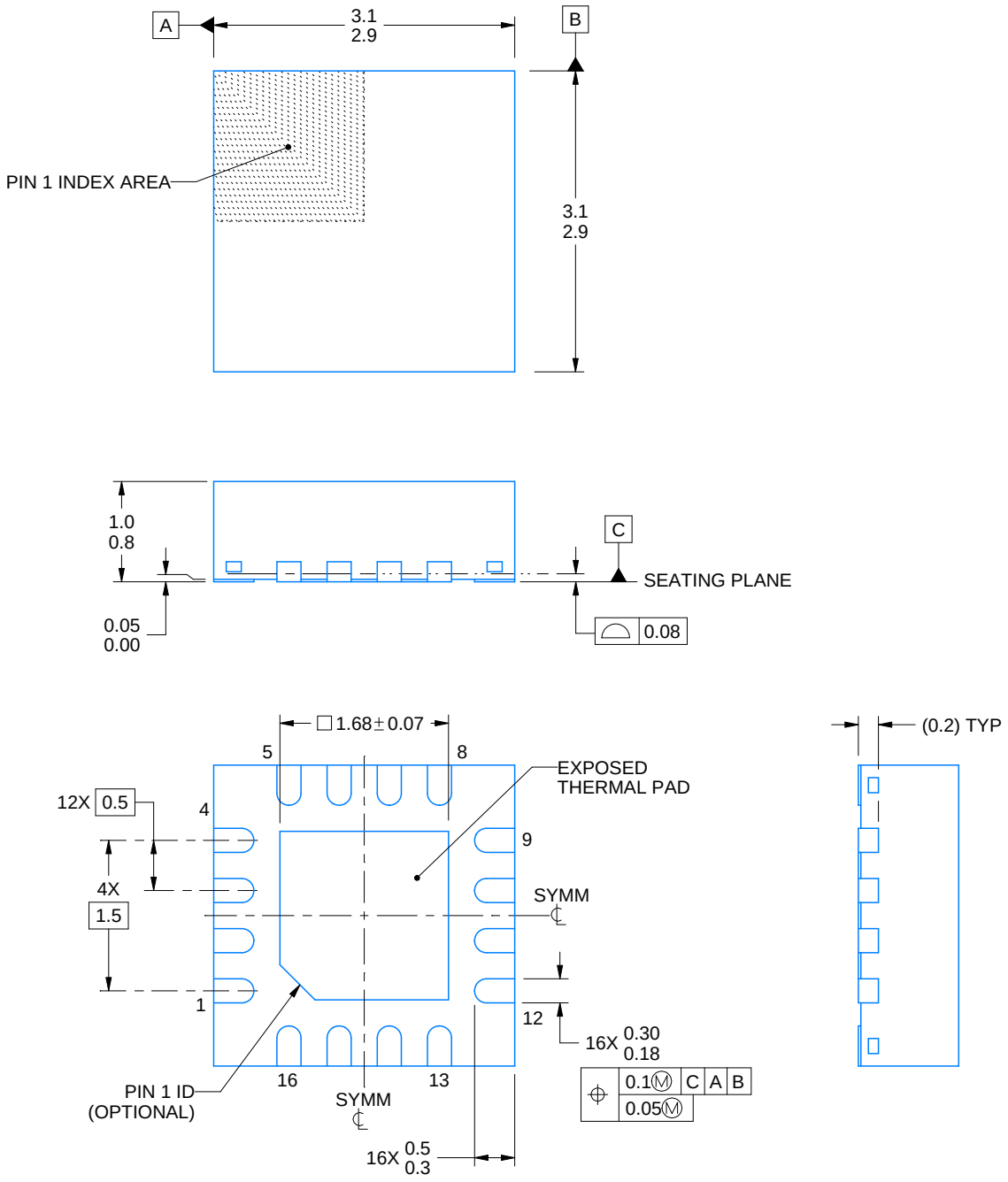

4222419/C 04/2021

NOTES:

1. All linear dimensions are in millimeters. Any dimensions in parenthesis are for reference only. Dimensioning and tolerancing per ASME Y14.5M.
2. This drawing is subject to change without notice.
3. The package thermal pad must be soldered to the printed circuit board for thermal and mechanical performance.

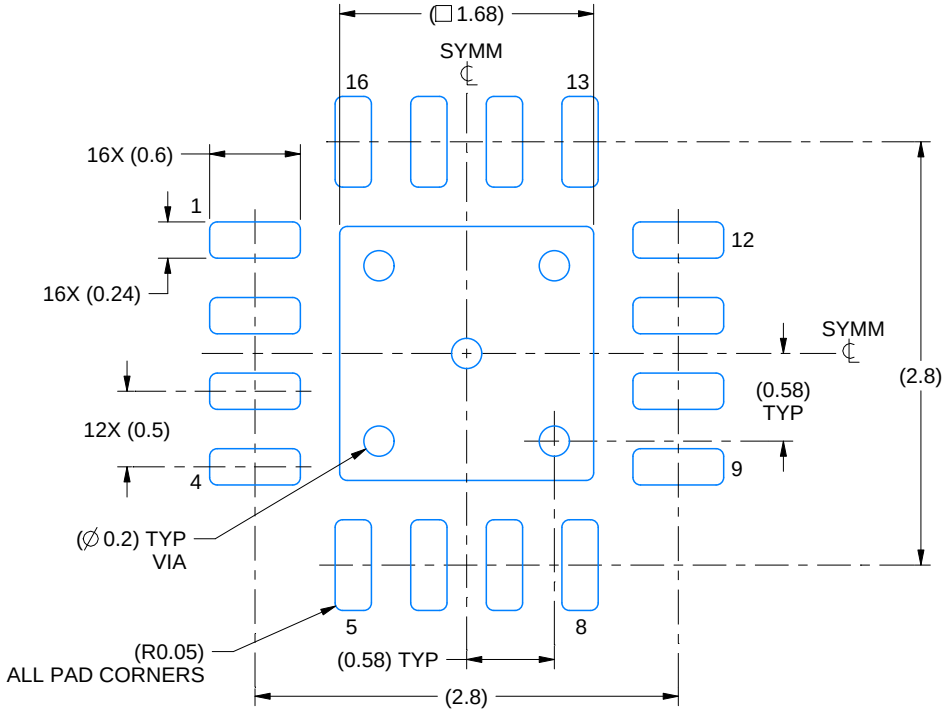

LAND PATTERN EXAMPLE
SCALE:20X

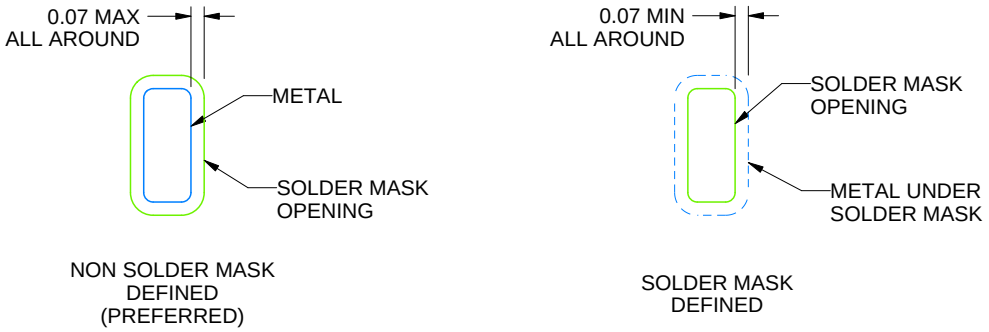

SOLDER MASK DETAILS

4222419/C 04/2021

NOTES: (continued)

4. This package is designed to be soldered to a thermal pad on the board. For more information, see Texas Instruments literature number SLUA271 (www.ti.com/lit/slua271).
5. Vias are optional depending on application, refer to device data sheet. If any vias are implemented, refer to their locations shown on this view. It is recommended that vias under paste be filled, plugged or tented.

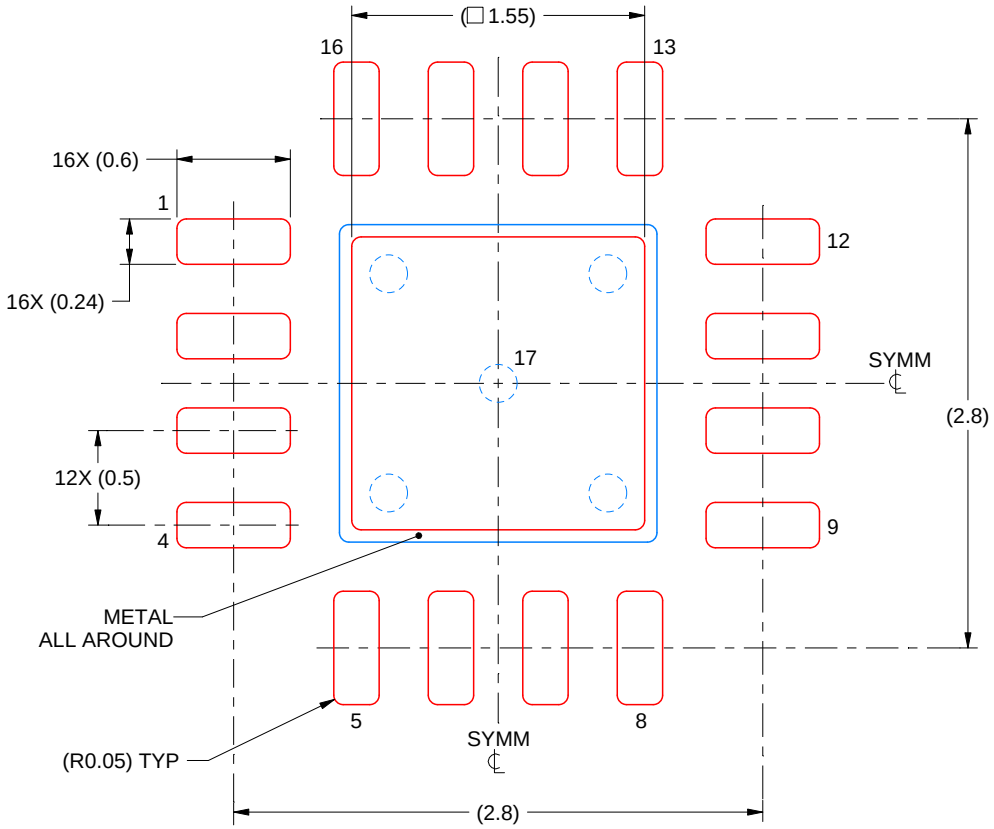

SOLDER PASTE EXAMPLE
BASED ON 0.125 mm THICK STENCIL

EXPOSED PAD 17:
85% PRINTED SOLDER COVERAGE BY AREA UNDER PACKAGE
SCALE:25X

4222419/C 04/2021

NOTES: (continued)

6. Laser cutting apertures with trapezoidal walls and rounded corners may offer better paste release. IPC-7525 may have alternate design recommendations.

重要声明和免责声明

TI 提供技术和可靠性数据（包括数据表）、设计资源（包括参考设计）、应用或其他设计建议、网络工具、安全信息和其他资源，不保证没有瑕疵且不做出任何明示或暗示的担保，包括但不限于对适销性、某特定用途方面的适用性或不侵犯任何第三方知识产权的暗示担保。

这些资源可供使用 TI 产品进行设计的熟练开发人员使用。您将自行承担以下全部责任：(1) 针对您的应用选择合适的 TI 产品，(2) 设计、验证并测试您的应用，(3) 确保您的应用满足相应标准以及任何其他安全、安保或其他要求。这些资源如有变更，恕不另行通知。TI 授权您仅可将这些资源用于研发本资源所述的 TI 产品的应用。严禁对这些资源进行其他复制或展示。您无权使用任何其他 TI 知识产权或任何第三方知识产权。您应全额赔偿因在这些资源的使用中对 TI 及其代表造成的任何索赔、损害、成本、损失和债务，TI 对此概不负责。

TI 提供的产品受 TI 的销售条款 (https:www.ti.com.cn/zh-cn/legal/termsofsale.html) 或 ti.com.cn 上其他适用条款/TI 产品随附的其他适用条款的约束。TI 提供这些资源并不会扩展或以其他方式更改 TI 针对 TI 产品发布的适用的担保或担保免责声明。

邮寄地址：上海市浦东新区世纪大道 1568 号中建大厦 32 楼，邮政编码：200122
Copyright © 2021 德州仪器半导体技术（上海）有限公司