MIXED SIGNAL MICROCONTROLLER

FEATURES

- Low Supply Voltage Range 1.8 V to 3.6 V
- Ultra-Low Power Consumption
  - Active Mode: 220 µA at 1 MHz, 2.2 V
  - Standby Mode: 0.5 µA
  - Off Mode (RAM Retention): 0.1 µA
- Five Power-Saving Modes
- Ultra-Fast Wake-Up From Standby Mode in Less Than 1 µs
- 16-Bit RISC Architecture, 62.5-ns Instruction Cycle Time
- Basic Clock Module Configurations:
  - Internal Frequencies up to 16 MHz With Four Calibrated Frequencies to ±1%
  - Internal Very Low-Power Low-Frequency Oscillator
  - 32-kHz Crystal
  - External Digital Clock Source
- 16-Bit Timer_A With Two Capture/Compare Registers
- On-Chip Comparator for Analog Signal Compare Function or Slope A/D (MSP430F20x1)
- 10-Bit 200-ksps A/D Converter With Internal Reference, Sample-and-Hold, and Autoscan (MSP430F20x2)
- 16-Bit Sigma-Delta A/D Converter With Differential PGA Inputs and Internal Reference (MSP430F20x3)
- Universal Serial Interface (USI) Supporting SPI and I2C (MSP430F20x2 and MSP430F20x3)
- Brownout Detector
- Serial Onboard Programming, No External Programming Voltage Needed, Programmable Code Protection by Security Fuse
- On-Chip Emulation Logic With Spy-Bi-Wire Interface
- Family Members:
  - MSP430F2001
    - 1KB + 256B Flash Memory
    - 128B RAM
  - MSP430F2011
    - 2KB + 256B Flash Memory
    - 128B RAM
  - MSP430F2002
    - 1KB + 256B Flash Memory
    - 128B RAM
  - MSP430F2012
    - 2KB + 256B Flash Memory
    - 128B RAM
  - MSP430F2003
    - 1KB + 256B Flash Memory
    - 128B RAM
  - MSP430F2013
    - 2KB + 256B Flash Memory
    - 128B RAM
- Available in 14-Pin Plastic Small-Outline Thin Package (TSSOP), 14-Pin Plastic Dual Inline Package (PDIP), and 16-Pin QFN
- For Complete Module Descriptions, See the *MSP430x2xx Family User's Guide* (SLAU144)

DESCRIPTION

The Texas Instruments MSP430 family of ultra-low-power microcontrollers consist of several devices featuring different sets of peripherals targeted for various applications. The architecture, combined with five low-power modes is optimized to achieve extended battery life in portable measurement applications. The device features a powerful 16-bit RISC CPU, 16-bit registers, and constant generators that contribute to maximum code efficiency. The digitally controlled oscillator (DCO) allows wake-up from low-power modes to active mode in less than 1 µs.

The MSP430F20xx series is an ultra-low-power mixed signal microcontroller with a built-in 16-bit timer and ten I/O pins. In addition, the MSP430F20x1 has a versatile analog comparator. The MSP430F20x2 and MSP430F20x3 have built-in communication capability using synchronous protocols (SPI or I2C) and a 10-bit A/D converter (MSP430F20x2) or a 16-bit sigma-delta A/D converter (MSP430F20x3).

Please be aware that an important notice concerning availability, standard warranty, and use in critical applications of Texas Instruments semiconductor products and disclaimers thereto appears at the end of this data sheet.

PRODUCTION DATA information is current as of publication date. Products conform to specifications per the terms of the Texas Instruments standard warranty. Production processing does not necessarily include testing of all parameters.

Copyright © 2005–2012, Texas Instruments Incorporated

Typical applications include sensor systems that capture analog signals, convert them to digital values, and then process the data for display or for transmission to a host system. Stand alone RF sensor front end is another area of application.

Table 1. Available Options(1)

T_A	PACKAGED DEVICES(2)		
	PLASTIC 14-PIN TSSOP (PW)	PLASTIC 14-PIN DIP (N)	PLASTIC 16-PIN QFN (RSA)
-40°C to 85°C	MSP430F2001IPW MSP430F2011IPW MSP430F2002IPW MSP430F2012IPW MSP430F2003IPW MSP430F2013IPW	MSP430F2001IN MSP430F2011IN MSP430F2002IN MSP430F2012IN MSP430F2003IN MSP430F2013IN	MSP430F2001IRSA MSP430F2011IRSA MSP430F2002IRSA MSP430F2012IRSA MSP430F2003IRSA MSP430F2013IRSA
-40°C to 105°C	MSP430F2001TPW MSP430F2011TPW MSP430F2002TPW MSP430F2012TPW MSP430F2003TPW MSP430F2013TPW	MSP430F2001TN MSP430F2011TN MSP430F2002TN MSP430F2012TN MSP430F2003TN MSP430F2013TN	MSP430F2001TRSA MSP430F2011TRSA MSP430F2002TRSA MSP430F2012TRSA MSP430F2003TRSA MSP430F2013TRSA

(1) For the most current package and ordering information, see the Package Option Addendum at the end of this document, or see the TI web site at www.ti.com.
(2) Package drawings, thermal data, and symbolization are available at www.ti.com/packaging.

Copyright © 2005–2012, Texas Instruments Incorporated

Device Pinout, MSP430F20x1

See port schematics section for detailed I/O information.

PW or N PACKAGE
(TOP VIEW)

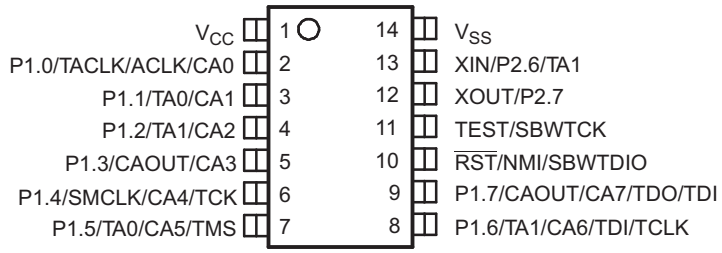

RSA PACKAGE
(TOP VIEW)

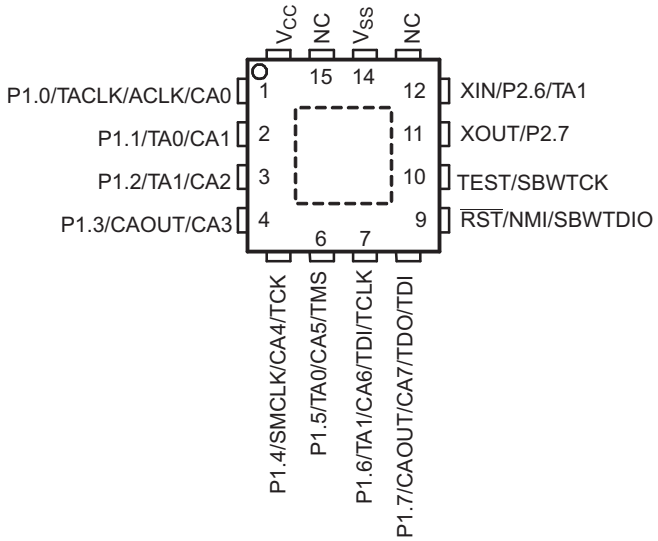

Device Pinout, MSP430F20x2

See port schematics section for detailed I/O information.

PW or N PACKAGE
(TOP VIEW)

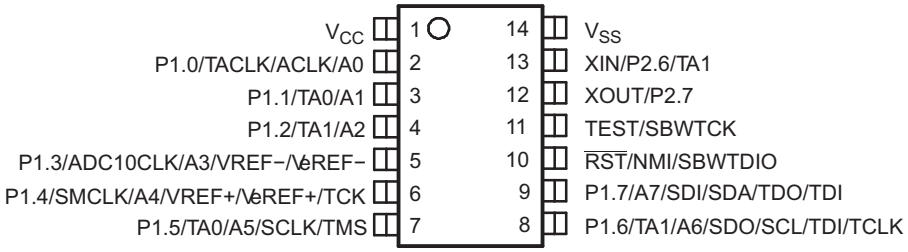

RSA PACKAGE
(TOP VIEW)

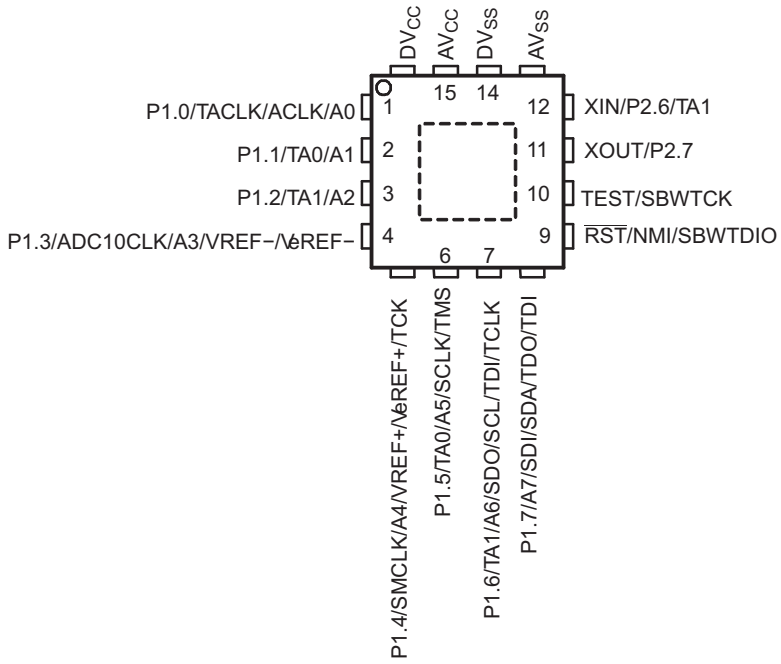

Copyright © 2005–2012, Texas Instruments Incorporated

Device Pinout, MSP430F20x3

See port schematics section for detailed I/O information.

PW or N PACKAGE
(TOP VIEW)

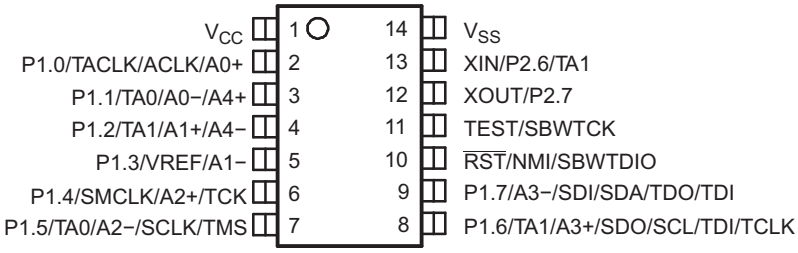

RSA PACKAGE
(TOP VIEW)

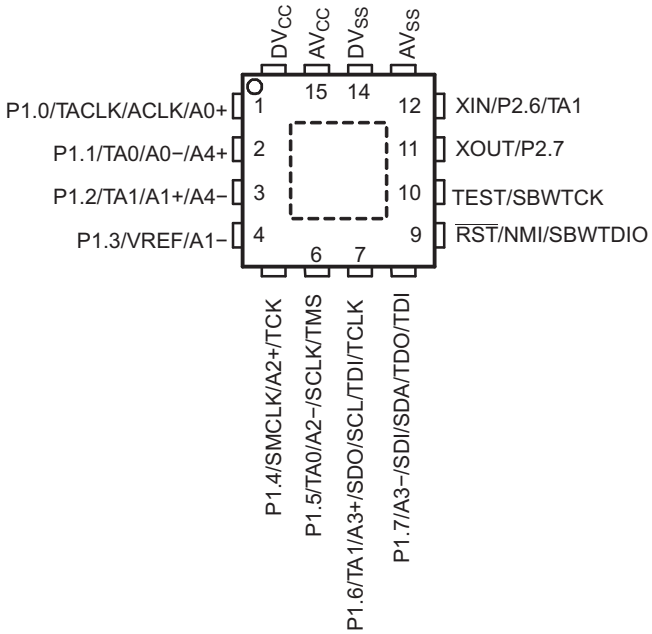

Functional Block Diagram, MSP430F20x1

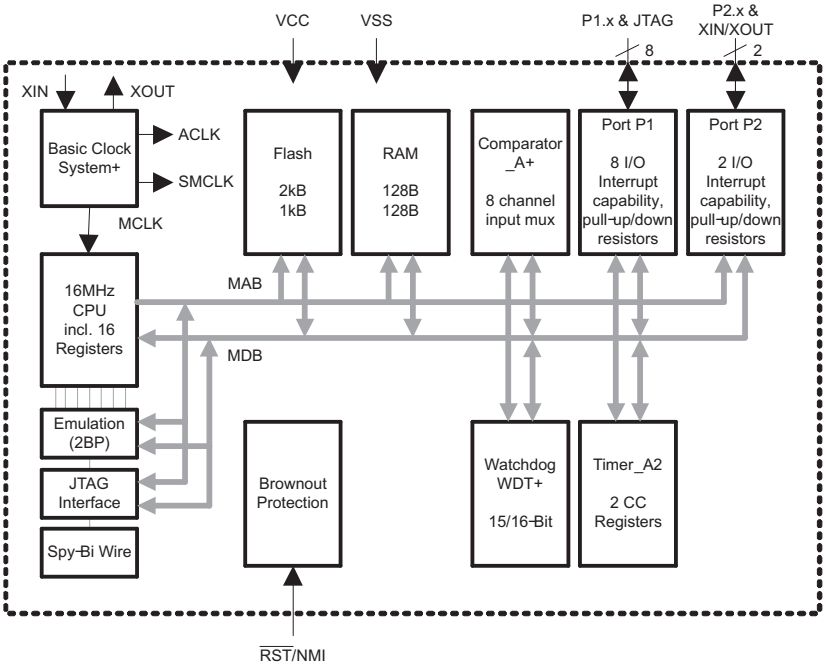

NOTE: See port schematics section for detailed I/O information.

Functional Block Diagram, MSP430F20x2

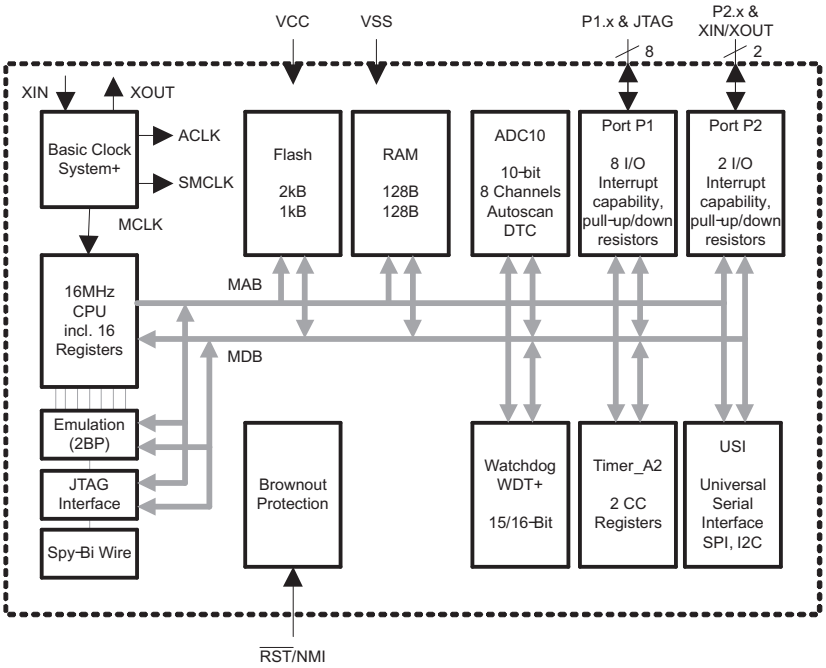

NOTE: See port schematics section for detailed I/O information.

Copyright © 2005–2012, Texas Instruments Incorporated

Functional Block Diagram, MSP430F20x3

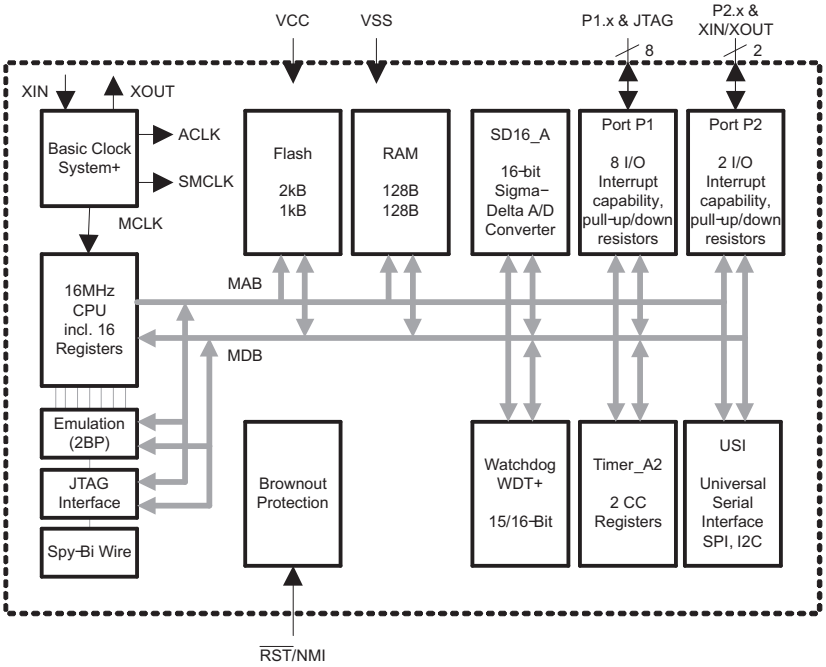

NOTE: See port schematics section for detailed I/O information.

Table 2. Terminal Functions, MSP430F20x1

TERMINAL			I/O	DESCRIPTION
NAME	NO.			
	PW, N	RSA		
P1.0/TACLK/ACLK/CA0	2	1	I/O	General-purpose digital I/O pin Timer_A, clock signal TACLK input ACLK signal output Comparator_A+, CA0 input
P1.1/TA0/CA1	3	2	I/O	General-purpose digital I/O pin Timer_A, capture: CCI0A input, compare: Out0 output Comparator_A+, CA1 input
P1.2/TA1/CA2	4	3	I/O	General-purpose digital I/O pin Timer_A, capture: CCI1A input, compare: Out1 output Comparator_A+, CA2 input
P1.3/CAOUT/CA3	5	4	I/O	General-purpose digital I/O pin Comparator_A+, output / CA3 input
P1.4/SMCLK/C4/TCK	6	5	I/O	General-purpose digital I/O pin SMCLK signal output Comparator_A+, CA4 input JTAG test clock, input terminal for device programming and test
P1.5/TA0/CA5/TMS	7	6	I/O	General-purpose digital I/O pin Timer_A, compare: Out0 output Comparator_A+, CA5 input JTAG test mode select, input terminal for device programming and test
P1.6/TA1/CA6/TDI/TCLK	8	7	I/O	General-purpose digital I/O pin Timer_A, compare: Out1 output Comparator_A+, CA6 input JTAG test data input or test clock input during programming and test
P1.7/CAOUT/CA7/TDO/TDI(1)	9	8	I/O	General-purpose digital I/O pin Comparator_A+, output / CA7 input JTAG test data output terminal or test data input during programming and test
XIN/P2.6/TA1	13	12	I/O	Input terminal of crystal oscillator General-purpose digital I/O pin Timer_A, compare: Out1 output
XOUT/P2.7	12	11	I/O	Output terminal of crystal oscillator General-purpose digital I/O pin(2)
$\overline{\text{RST}}$/NMI/SBWTDIO	10	9	I	Reset or nonmaskable interrupt input Spy-Bi-Wire test data input/output during programming and test
TEST/SBWTCK	11	10	I	Selects test mode for JTAG pins on Port 1. The device protection fuse is connected to TEST. Spy-Bi-Wire test clock input during programming and test
V_{CC}	1	16		Supply voltage
V_{SS}	14	14		Ground reference
NC	NA	13, 15		Not connected
QFN Pad	NA	Pad	NA	QFN package pad. Connection to VSS is recommended.

(1) TDO or TDI is selected via JTAG instruction.
(2) If XOUT/P2.7 is used as an input, excess current flows until P2SEL.7 is cleared. This is due to the oscillator output driver connection to this pad after reset.

Copyright © 2005–2012, Texas Instruments Incorporated

Table 3. Terminal Functions, MSP430F20x2

TERMINAL			I/O	DESCRIPTION
NAME	NO.			
	PW, N	RSA		
P1.0/TACLK/ACLK/A0	2	1	I/O	General-purpose digital I/O pin Timer_A, clock signal TACLK input ACLK signal output ADC10 analog input A0
P1.1/TA0/A1	3	2	I/O	General-purpose digital I/O pin Timer_A, capture: CCI0A input, compare: Out0 output ADC10 analog input A1
P1.2/TA1/A2	4	3	I/O	General-purpose digital I/O pin Timer_A, capture: CCI1A input, compare: Out1 output ADC10 analog input A2
P1.3/ADC10CLK/A3/ VREF-/VeREF-	5	4	I/O	General-purpose digital I/O pin ADC10 conversion clock output ADC10 analog input A3 Input for negative external reference voltage/negative internal reference voltage output
P1.4/SMCLK/A4/VREF+/ VeREF+/TCK	6	5	I/O	General-purpose digital I/O pin SMCLK signal output ADC10 analog input A4 Input for positive external reference voltage/positive internal reference voltage output JTAG test clock, input terminal for device programming and test
P1.5/TA0/A5/SCLK/TMS	7	6	I/O	General-purpose digital I/O pin Timer_A, compare: Out0 output ADC10 analog input A5 USI: external clock input in SPI or I2C mode; clock output in SPI mode JTAG test mode select, input terminal for device programming and test
P1.6/TA1/A6/SDO/SCL/ TDI/TCLK	8	7	I/O	General-purpose digital I/O pin Timer_A, capture: CCI1B input, compare: Out1 output ADC10 analog input A6 USI: Data output in SPI mode; I2C clock in I2C mode JTAG test data input or test clock input during programming and test
P1.7/A7/SDI/SDA/ TDO/TDI(1)	9	8	I/O	General-purpose digital I/O pin ADC10 analog input A7 USI: Data input in SPI mode; I2C data in I2C mode JTAG test data output terminal or test data input during programming and test
XIN/P2.6/TA1	13	12	I/O	Input terminal of crystal oscillator General-purpose digital I/O pin Timer_A, compare: Out1 output
XOUT/P2.7	12	11	I/O	Output terminal of crystal oscillator General-purpose digital I/O pin(2)
$\overline{\text{RST}}$/NMI/SBWTDIO	10	9	I	Reset or nonmaskable interrupt input Spy-Bi-Wire test data input/output during programming and test
TEST/SBWTCK	11	10	I	Selects test mode for JTAG pins on Port 1. The device protection fuse is connected to TEST. Spy-Bi-Wire test clock input during programming and test
V_{CC}	1	NA		Supply voltage
V_{SS}	14	NA		Ground reference
DV_{CC}	NA	16		Digital supply voltage
AV_{CC}	NA	15		Analog supply voltage
DV_{SS}	NA	14		Digital ground reference
AV_{SS}	NA	13		Analog ground reference
QFN Pad	NA	Pad	NA	QFN package pad. Connection to VSS is recommended.

(1) TDO or TDI is selected via JTAG instruction.
(2) If XOUT/P2.7 is used as an input, excess current flows until P2SEL.7 is cleared. This is due to the oscillator output driver connection to this pad after reset.

Copyright © 2005–2012, Texas Instruments Incorporated

Table 4. Terminal Functions, MSP430F20x3

TERMINAL			I/O	DESCRIPTION
NAME	NO.			
	PW, N	RSA		
P1.0/TACLK/ACLK/A0+	2	1	I/O	General-purpose digital I/O pin Timer_A, clock signal TACLK input ACLK signal output SD16_A positive analog input A0
P1.1/TA0/A0-/A4+	3	2	I/O	General-purpose digital I/O pin Timer_A, capture: CCI0A input, compare: Out0 output SD16_A negative analog input A0 SD16_A positive analog input A4
P1.2/TA1/A1+/A4-	4	3	I/O	General-purpose digital I/O pin Timer_A, capture: CCI1A input, compare: Out1 output SD16_A positive analog input A1 SD16_A negative analog input A4
P1.3/VREF/A1-	5	4	I/O	General-purpose digital I/O pin Input for an external reference voltage/internal reference voltage output (can be used as mid-voltage) SD16_A negative analog input A1
P1.4/SMCLK/A2+/TCK	6	5	I/O	General-purpose digital I/O pin SMCLK signal output SD16_A positive analog input A2 JTAG test clock, input terminal for device programming and test
P1.5/TA0/A2-/SCLK/TMS	7	6	I/O	General-purpose digital I/O pin Timer_A, compare: Out0 output SD16_A negative analog input A2 USI: external clock input in SPI or I2C mode; clock output in SPI mode JTAG test mode select, input terminal for device programming and test
P1.6/TA1/A3+/SDO/SCL/ TDI/TCLK	8	7	I/O	General-purpose digital I/O pin Timer_A, capture: CCI1B input, compare: Out1 output SD16_A positive analog input A3 USI: Data output in SPI mode; I2C clock in I2C mode JTAG test data input or test clock input during programming and test
P1.7/A3-/SDI/SDA/ TDO/TDI[1]	9	8	I/O	General-purpose digital I/O pin SD16_A negative analog input A3 USI: Data input in SPI mode; I2C data in I2C mode JTAG test data output terminal or test data input during programming and test
XIN/P2.6/TA1	13	12	I/O	Input terminal of crystal oscillator General-purpose digital I/O pin Timer_A, compare: Out1 output
XOUT/P2.7	12	11	I/O	Output terminal of crystal oscillator General-purpose digital I/O pin[2]
$\overline{\text{RST}}$/NMI/SBWTDIO	10	9	I	Reset or nonmaskable interrupt input Spy-Bi-Wire test data input/output during programming and test
TEST/SBWTCK	11	10	I	Selects test mode for JTAG pins on Port 1. The device protection fuse is connected to TEST. Spy-Bi-Wire test clock input during programming and test
V_{CC}	1	NA		Supply voltage
V_{SS}	14	NA		Ground reference
DV_{CC}	NA	16		Digital supply voltage
AV_{CC}	NA	15		Analog supply voltage
DV_{SS}	NA	14		Digital ground reference
AV_{SS}	NA	13		Analog ground reference
QFN Pad	NA	Pad	NA	QFN package pad. Connection to VSS is recommended.

(1) TDO or TDI is selected via JTAG instruction.
(2) If XOUT/P2.7 is used as an input, excess current flows until P2SEL.7 is cleared. This is due to the oscillator output driver connection to this pad after reset.

Copyright © 2005–2012, Texas Instruments Incorporated

SHORT-FORM DESCRIPTION

CPU

The MSP430 CPU has a 16-bit RISC architecture that is highly transparent to the application. All operations, other than program-flow instructions, are performed as register operations in conjunction with seven addressing modes for source operand and four addressing modes for destination operand.

The CPU is integrated with 16 registers that provide reduced instruction execution time. The register-to-register operation execution time is one cycle of the CPU clock.

Four of the registers, R0 to R3, are dedicated as program counter, stack pointer, status register, and constant generator respectively. The remaining registers are general-purpose registers.

Peripherals are connected to the CPU using data, address, and control buses, and can be handled with all instructions.

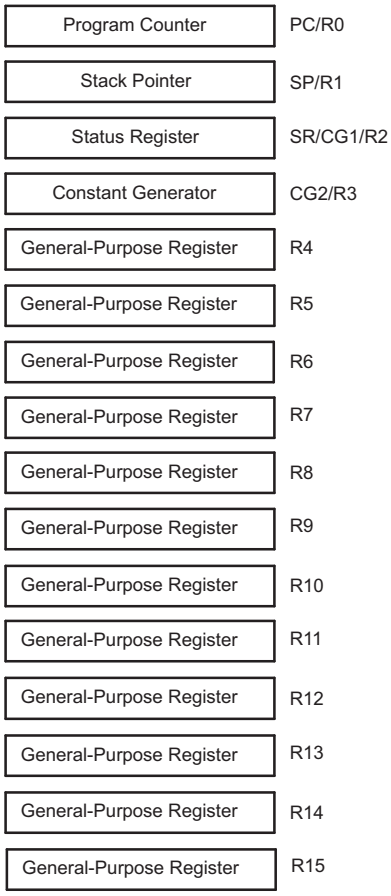

Instruction Set

The instruction set consists of 51 instructions with three formats and seven address modes. Each instruction can operate on word and byte data. Table 5 shows examples of the three types of instruction formats; Table 6 shows the address modes.

Table 5. Instruction Word Formats

INSTRUCTION FORMAT	EXAMPLE	OPERATION
Dual operands, source-destination	ADD R4,R5	R4 + R5 ---> R5
Single operands, destination only	CALL R8	PC -->(TOS), R8--> PC
Relative jump, un/conditional	JNE	Jump-on-equal bit = 0

Table 6. Address Mode Descriptions

ADDRESS MODE	S(1)	D(1)	SYNTAX	EXAMPLE	OPERATION
Register	✓	✓	MOV Rs,Rd	MOV R10,R11	R10 --> R11
Indexed	✓	✓	MOV X(Rn),Y(Rm)	MOV 2(R5),6(R6)	M(2+R5)--> M(6+R6)
Symbolic (PC relative)	✓	✓	MOV EDE,TONI		M(EDE) --> M(TONI)
Absolute	✓	✓	MOV &MEM,&TCDAT		M(MEM) --> M(TCDAT)
Indirect	✓		MOV @Rn,Y(Rm)	MOV @R10,Tab(R6)	M(R10) --> M(Tab+R6)
Indirect autoincrement	✓		MOV @Rn+,Rm	MOV @R10+,R11	M(R10) --> R11 R10 + 2--> R10
Immediate	✓		MOV #X,TONI	MOV #45,TONI	#45 --> M(TONI)

(1) S = source, D = destination

Copyright © 2005–2012, Texas Instruments Incorporated

Operating Modes

The MSP430 has one active mode and five software-selectable low-power modes of operation. An interrupt event can wake the device from any of the five low-power modes, service the request, and restore back to the low-power mode on return from the interrupt program.

The following six operating modes can be configured by software:

- Active mode (AM)
  - All clocks are active
- Low-power mode 0 (LPM0)
  - CPU is disabled
  - ACLK and SMCLK remain active
  - MCLK is disabled
- Low-power mode 1 (LPM1)
  - CPU is disabled
  - ACLK and SMCLK remain active. MCLK is disabled
  - DCO's dc-generator is disabled if DCO not used in active mode
- Low-power mode 2 (LPM2)
  - CPU is disabled
  - MCLK and SMCLK are disabled
  - DCO's dc-generator remains enabled
  - ACLK remains active
- Low-power mode 3 (LPM3)
  - CPU is disabled
  - MCLK and SMCLK are disabled
  - DCO's dc-generator is disabled
  - ACLK remains active
- Low-power mode 4 (LPM4)
  - CPU is disabled
  - ACLK is disabled
  - MCLK and SMCLK are disabled
  - DCO's dc-generator is disabled
  - Crystal oscillator is stopped

Copyright © 2005–2012, Texas Instruments Incorporated

Interrupt Vector Addresses

The interrupt vectors and the power-up starting address are located in the address range of 0FFFFh to 0FFC0h. The vector contains the 16-bit address of the appropriate interrupt handler instruction sequence.

If the reset vector (located at address 0FFFEh) contains 0FFFFh (for example, flash is not programmed) the CPU goes into LPM4 immediately after power-up.

Table 7. Interrupt Sources

INTERRUPT SOURCE	INTERRUPT FLAG	SYSTEM INTERRUPT	WORD ADDRESS	PRIORITY
Power-up External reset Watchdog Timer+ Flash key violation PC out-of-range(1)	PORIFG RSTIFG WDTIFG KEYV See (2)	Reset	0FFFEh	31, highest
NMI Oscillator fault Flash memory access violation	NMIIFG OFIFG ACCVIFG(2)(3)	(non)-maskable, (non)-maskable, (non)-maskable	0FFFCh	30
			0FFFAh	29
			0FFF8h	28
Comparator_A+ (MSP430F20x1)	CAIFG(4)	maskable	0FFF6h	27
Watchdog Timer+	WDTIFG	maskable	0FFF4h	26
Timer_A2	TACCR0 CCIFG(4)	maskable	0FFF2h	25
Timer_A2	TACCR1 CCIFG.TAIFG(2)(4)	maskable	0FFF0h	24
			0FFEEh	23
			0FFECh	22
ADC10 (MSP430F20x2)	ADC10IFG(4)	maskable	0FFEAh	21
SD16_A (MSP430F20x3)	SD16CCTL0 SD16OVIFG, SD16CCTL0 SD16IFG(2)(4)	maskable		
USI (MSP430F20x2, MSP430F20x3)	USIIFG, USISTTIFG(2)(4)	maskable	0FFE8h	20
I/O Port P2 (two flags)	P2IFG.6 to P2IFG.7(2)(4)	maskable	0FFE6h	19
I/O Port P1 (eight flags)	P1IFG.0 to P1IFG.7(2)(4)	maskable	0FFE4h	18
			0FFE2h	17
			0FFE0h	16
See (5)			0FFDEh to 0FFC0h	15 to 0, lowest

(1) A reset is generated if the CPU tries to fetch instructions from within the module register memory address range (0h to 01FFh) or from within unused address ranges.
(2) Multiple source flags
(3) (non)-maskable: the individual interrupt-enable bit can disable an interrupt event, but the general interrupt enable cannot.
(4) Interrupt flags are located in the module.
(5) The interrupt vectors at addresses 0FFDEh to 0FFC0h are not used in this device and can be used for regular program code if necessary.

Copyright © 2005–2012, Texas Instruments Incorporated

Special Function Registers

Most interrupt and module enable bits are collected into the lowest address space. Special function register bits not allocated to a functional purpose are not physically present in the device. Simple software access is provided with this arrangement.

Legend		
	rw:	Bit can be read and written.
	rw-0,1:	Bit can be read and written. It is reset or set by PUC.
	rw-(0,1):	Bit can be read and written. It is reset or set by POR.
		SFR bit is not present in device.

Table 8. Interrupt Enable Register 1 and 2

Address	7	6	5	4	3	2	1	0
00h			**ACCVIE**	**NMIIE**			**OFIE**	**WDTIE**
			rw-0	rw-0			rw-0	rw-0

WDTIE	Watchdog Timer interrupt enable. Inactive if watchdog mode is selected. Active if Watchdog Timer is configured in interval timer mode.
OFIE	Oscillator fault interrupt enable
NMIIE	(Non)maskable interrupt enable
ACCVIE	Flash access violation interrupt enable

Address	7	6	5	4	3	2	1	0
01h								

Table 9. Interrupt Flag Register 1 and 2

Address	7	6	5	4	3	2	1	0
02h				**NMIIFG**	**RSTIFG**	**PORIFG**	**OFIFG**	**WDTIFG**
				rw-0	rw-(0)	rw-(1)	rw-1	rw-(0)

WDTIFG	Set on watchdog timer overflow (in watchdog mode) or security key violation. Reset on V_{CC} power-on or a reset condition at the $\overline{RST}$/NMI pin in reset mode.
OFIFG	Flag set on oscillator fault.
PORIFG	Power-On Reset interrupt flag. Set on V_{CC} power-up.
RSTIFG	External reset interrupt flag. Set on a reset condition at $\overline{RST}$/NMI pin in reset mode. Reset on V_{CC} power-up.
NMIIFG	Set via $\overline{RST}$/NMI pin

Address	7	6	5	4	3	2	1	0
03h								

Copyright © 2005–2012, Texas Instruments Incorporated

Memory Organization

Table 10. Memory Organization

		MSP430F200x	MSP430F201x
Memory Main: interrupt vector Main: code memory	Size Flash Flash	1KB Flash 0FFFFh-0FFC0h 0FFFFh-0FC00h	2KB Flash 0FFFFh-0FFC0h 0FFFFh-0F800h
Information memory	Size Flash	256 Byte 010FFh - 01000h	256 Byte 010FFh - 01000h
RAM	Size	128 Byte 027Fh - 0200h	128 Byte 027Fh - 0200h
Peripherals	16-bit 8-bit 8-bit SFR	01FFh - 0100h 0FFh - 010h 0Fh - 00h	01FFh - 0100h 0FFh - 010h 0Fh - 00h

Flash Memory

The flash memory can be programmed via the Spy-Bi-Wire/JTAG port, or in-system by the CPU. The CPU can perform single-byte and single-word writes to the flash memory. Features of the flash memory include:

- Flash memory has n segments of main memory and four segments of information memory (A to D) of 64 bytes each. Each segment in main memory is 512 bytes in size.
- Segments 0 to n may be erased in one step, or each segment may be individually erased.
- Segments A to D can be erased individually, or as a group with segments 0 to n. Segments A to D are also called *information memory.*
- Segment A contains calibration data. After reset segment A is protected against programming and erasing. It can be unlocked but care should be taken not to erase this segment if the device-specific calibration data is required.

Copyright © 2005–2012, Texas Instruments Incorporated

Peripherals

Peripherals are connected to the CPU through data, address, and control busses and can be handled using all instructions. For complete module descriptions, refer to the *MSP430F2xx Family User's Guide.*

Oscillator and System Clock

The clock system is supported by the basic clock module that includes support for a 32768-Hz watch crystal oscillator, an internal very-low-power low-frequency oscillator and an internal digitally-controlled oscillator (DCO). The basic clock module is designed to meet the requirements of both low system cost and low power consumption. The internal DCO provides a fast turn-on clock source and stabilizes in less than 1 µs. The basic clock module provides the following clock signals:

- Auxiliary clock (ACLK), sourced either from a 32768-Hz watch crystal or the internal LF oscillator.
- Main clock (MCLK), the system clock used by the CPU.
- Sub-Main clock (SMCLK), the sub-system clock used by the peripheral modules.

Table 11. DCO Calibration Data (Provided From Factory in Flash Information Memory Segment A)

DCO FREQUENCY	CALIBRATION REGISTER	SIZE	ADDRESS
1 MHz	CALBC1_1MHZ	byte	010FFh
	CALDCO_1MHZ	byte	010FEh
8 MHz	CALBC1_8MHZ	byte	010FDh
	CALDCO_8MHZ	byte	010FCh
12 MHz	CALBC1_12MHZ	byte	010FBh
	CALDCO_12MHZ	byte	010FAh
16 MHz	CALBC1_16MHZ	byte	010F9h
	CALDCO_16MHZ	byte	010F8h

Brownout

The brownout circuit is implemented to provide the proper internal reset signal to the device during power on and power off.

Digital I/O

There is one 8-bit I/O port implemented—port P1—and two bits of I/O port P2:

- All individual I/O bits are independently programmable.
- Any combination of input, output, and interrupt condition is possible.
- Edge-selectable interrupt input capability for all the eight bits of port P1 and the two bits of port P2.
- Read and write access to port-control registers is supported by all instructions.
- Each I/O has an individually programmable pullup or pulldown resistor.

Watchdog Timer (WDT+)

The primary function of the watchdog timer (WDT+) module is to perform a controlled system restart after a software problem occurs. If the selected time interval expires, a system reset is generated. If the watchdog function is not needed in an application, the module can be disabled or configured as an interval timer and can generate interrupts at selected time intervals.

Copyright © 2005–2012, Texas Instruments Incorporated

Timer_A2

Timer_A2 is a 16-bit timer/counter with two capture/compare registers. Timer_A2 can support multiple capture/compares, PWM outputs, and interval timing. Timer_A2 also has extensive interrupt capabilities. Interrupts may be generated from the counter on overflow conditions and from each of the capture/compare registers.

Table 12. Timer_A2 Signal Connections (MSP430F20x1)

INPUT PIN NUMBER		DEVICE INPUT SIGNAL	MODULE INPUT NAME	MODULE BLOCK	MODULE OUTPUT SIGNAL	OUTPUT PIN NUMBER	
PW, N	RSA					PW, N	RSA
2 - P1.0	1 - P1.0	TACLK	TACLK	Timer	NA		
		ACLK	ACLK				
		SMCLK	SMCLK				
2 - P1.0	1 - P1.0	TACLK	INCLK				
3 - P1.1	2 - P1.1	TA0	CCI0A	CCR0	TA0	3 - P1.1	2 - P1.1
		ACLK (internal)	CCI0B			7 - P1.5	6 - P1.5
		V_{SS}	GND				
		V_{CC}	V_{CC}				
4 - P1.2	3 - P1.2	TA1	CCI1A	CCR1	TA1	4 - P1.2	3 - P1.2
		CAOUT (internal)	CCI1B			8 - P1.6	7 - P1.6
		V_{SS}	GND			13 - P2.6	12 - P2.6
		V_{CC}	V_{CC}				

Table 13. Timer_A2 Signal Connections (MSP430F20x2, MSP430F20x3)

INPUT PIN NUMBER		DEVICE INPUT SIGNAL	MODULE INPUT NAME	MODULE BLOCK	MODULE OUTPUT SIGNAL	OUTPUT PIN NUMBER	
PW, N	RSA					PW, N	RSA
2 - P1.0	1 - P1.0	TACLK	TACLK	Timer	NA		
		ACLK	ACLK				
		SMCLK	SMCLK				
2 - P1.0	1 - P1.0	TACLK	INCLK				
3 - P1.1	2 - P1.1	TA0	CCI0A	CCR0	TA0	3 - P1.1	2 - P1.1
7 - P1.5	6 - P1.5	ACLK (internal)	CCI0B			7 - P1.5	6 - P1.5
		V_{SS}	GND				
		V_{CC}	V_{CC}				
4 - P1.2	3 - P1.2	TA1	CCI1A	CCR1	TA1	4 - P1.2	3 - P1.2
8 - P1.6	7 - P1.6	TA1	CCI1B			8 - P1.6	7 - P1.6
		V_{SS}	GND			13 - P2.6	12 - P2.6
		V_{CC}	V_{CC}				

Copyright © 2005–2012, Texas Instruments Incorporated

Comparator_A+ (MSP430F20x1)

The primary function of the comparator_A+ module is to support precision slope analog-to-digital conversions, battery-voltage supervision, and monitoring of external analog signals.

USI (MSP430F20x2 and MSP430F20x3)

The universal serial interface (USI) module is used for serial data communication and provides the basic hardware for synchronous communication protocols like SPI and I2C.

ADC10 (MSP430F20x2)

The ADC10 module supports fast, 10-bit analog-to-digital conversions. The module implements a 10-bit SAR core, sample select control, reference generator and data transfer controller, or DTC, for automatic conversion result handling, allowing ADC samples to be converted and stored without any CPU intervention.

SD16_A (MSP430F20x3)

The SD16_A module supports 16-bit analog-to-digital conversions. The module implements a 16-bit sigma-delta core and reference generator. In addition to external analog inputs, internal V_{CC} sense and temperature sensors are also available.

Copyright © 2005–2012, Texas Instruments Incorporated

Peripheral File Map

Table 14. Peripherals With Word Access

ADC10 (MSP430F20x2)	ADC control 0 ADC control 1 ADC memory ADC data transfer start address	ADC10CTL0 ADC10CTL1 ADC10MEM ADC10SA	01B0h 01B2h 01B4h 01BCh
SD16_A (MSP430F20x3)	General Control Channel 0 Control Interrupt vector word register Channel 0 conversion memory	SD16CTL SD16CCTL0 SD16IV SD16MEM0	0100h 0102h 0110h 0112h
Timer_A	Capture/compare register Capture/compare register Timer_A register Capture/compare control Capture/compare control Timer_A control Timer_A interrupt vector	TACCR1 TACCR0 TAR TACCTL1 TACCTL0 TACTL TAIV	0174h 0172h 0170h 0164h 0162h 0160h 012Eh
Flash Memory	Flash control 3 Flash control 2 Flash control 1	FCTL3 FCTL2 FCTL1	012Ch 012Ah 0128h
Watchdog Timer+	Watchdog/timer control	WDTCTL	0120h

Table 15. Peripherals With Byte Access

ADC10 (MSP430F20x2)	Analog enable ADC data transfer control register 1 ADC data transfer control register 0	ADC10AE ADC10DTC1 ADC10DTC0	04Ah 049h 048h
SD16_A (MSP430F20x3)	Channel 0 Input Control Analog Enable	SD16INCTL0 SD16AE	0B0h 0B7h
USI (MSP430F20x2 and MSP430F20x3)	USI control 0 USI control 1 USI clock control USI bit counter USI shift register	USICTL0 USICTL1 USICKCTL USICNT USISR	078h 079h 07Ah 07Bh 07Ch
Comparator_A+ (MSP430F20x1)	Comparator_A+ port disable Comparator_A+ control 2 Comparator_A+ control 1	CAPD CACTL2 CACTL1	05Bh 05Ah 059h
Basic Clock System+	Basic clock system control 3 Basic clock system control 2 Basic clock system control 1 DCO clock frequency control	BCSCTL3 BCSCTL2 BCSCTL1 DCOCTL	053h 058h 057h 056h
Port P2	Port P2 resistor enable Port P2 selection Port P2 interrupt enable Port P2 interrupt edge select Port P2 interrupt flag Port P2 direction Port P2 output Port P2 input	P2REN P2SEL P2IE P2IES P2IFG P2DIR P2OUT P2IN	02Fh 02Eh 02Dh 02Ch 02Bh 02Ah 029h 028h
Port P1	Port P1 resistor enable Port P1 selection Port P1 interrupt enable Port P1 interrupt edge select Port P1 interrupt flag Port P1 direction Port P1 output Port P1 input	P1REN P1SEL P1IE P1IES P1IFG P1DIR P1OUT P1IN	027h 026h 025h 024h 023h 022h 021h 020h
Special Function	SFR interrupt flag 2 SFR interrupt flag 1 SFR interrupt enable 2 SFR interrupt enable 1	IFG2 IFG1 IE2 IE1	003h 002h 001h 000h

Copyright © 2005–2012, Texas Instruments Incorporated

Absolute Maximum Ratings(1)

	Voltage applied at V_{CC} to V_{SS}		-0.3 V to 4.1 V
	Voltage applied to any pin(2)		-0.3 V to V_{CC} + 0.3 V
	Diode current at any device terminal		±2 mA
T_{stg}	Storage temperature(3)	Unprogrammed device	-55°C to 150°C
		Programmed device	-55°C to 150°C

(1) Stresses beyond those listed under "absolute maximum ratings" may cause permanent damage to the device. These are stress ratings only, and functional operation of the device at these or any other conditions beyond those indicated under "recommended operating conditions" is not implied. Exposure to absolute-maximum-rated conditions for extended periods may affect device reliability.
(2) All voltages referenced to V_{SS}. The JTAG fuse-blow voltage, V_{FB}, is allowed to exceed the absolute maximum rating. The voltage is applied to the TEST pin when blowing the JTAG fuse.
(3) Higher temperature may be applied during board soldering according to the current JEDEC J-STD-020 specification with peak reflow temperatures not higher than classified on the device label on the shipping boxes or reels.

Recommended Operating Conditions

Typical values are specified at V_{CC} = 3.3 V and T_A = 25°C (unless otherwise noted)

			MIN	NOM	MAX	UNIT
V_{CC}	Supply voltage	During program execution	1.8		3.6	V
		During flash program/erase	2.2		3.6	
V_{SS}	Supply voltage			0		V
T_A	Operating free-air temperature	I version	-40		85	°C
		T version	-40		105	
f_{SYSTEM}	Processor frequency (maximum MCLK frequency)(1)(2)	V_{CC} = 1.8 V, Duty cycle = 50% ± 10%	dc		6	MHz
		V_{CC} = 2.7 V, Duty cycle = 50% ± 10%	dc		12	
		V_{CC} ≥ 3.3 V, Duty cycle = 50% ± 10%	dc		16	

(1) The MSP430 CPU is clocked directly with MCLK. Both the high and low phase of MCLK must not exceed the pulse width of the specified maximum frequency.
(2) Modules might have a different maximum input clock specification. See the specification of the respective module in this data sheet.

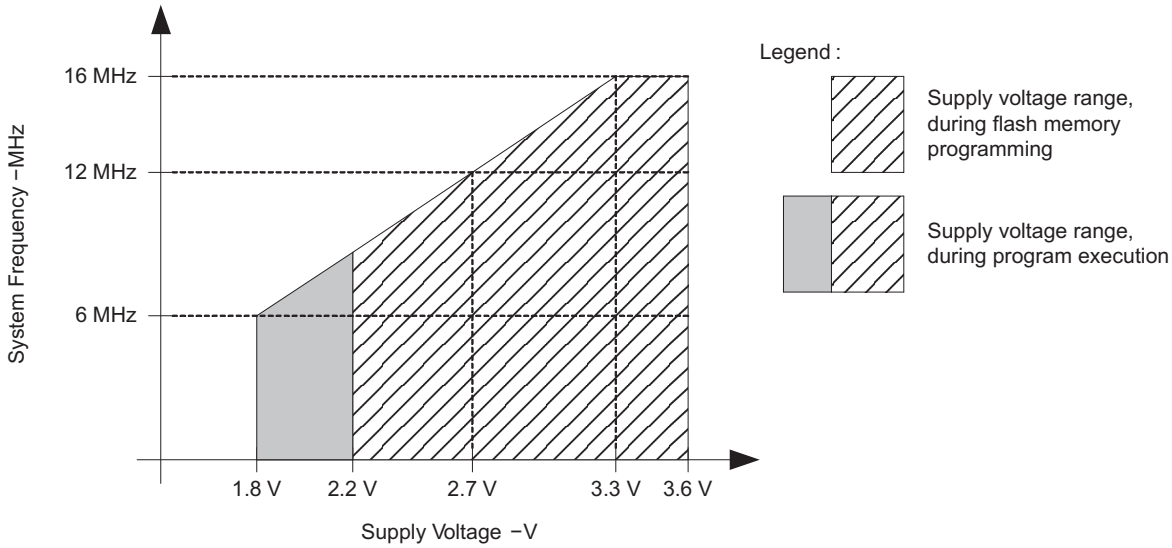

Note: Minimum processor frequency is defined by system clock. Flash program or erase operations require a minimum V_{CC} of 2.2 V.

Figure 1. Safe Operating Area

Copyright © 2005–2012, Texas Instruments Incorporated

Electrical Characteristics

Active Mode Supply Current Into V_{CC} Excluding External Current

over recommended ranges of supply voltage and operating free-air temperature (unless otherwise noted)(1)(2)

PARAMETER		TEST CONDITIONS	T_A	V_{CC}	MIN	TYP	MAX	UNIT
$I_{AM,1MHz}$	Active mode (AM) current (1 MHz)	$f_{DCO} = f_{MCLK} = f_{SMCLK}$ = 1 MHz, f_{ACLK} = 32768 Hz, Program executes in flash, BCSCTL1 = CALBC1_1MHZ, DCOCTL = CALDCO_1MHZ, CPUOFF = 0, SCG0 = 0, SCG1 = 0, OSCOFF = 0		2.2 V		220	270	µA
				3 V		300	370	
$I_{AM,1MHz}$	Active mode (AM) current (1 MHz)	$f_{DCO} = f_{MCLK} = f_{SMCLK}$ = 1 MHz, f_{ACLK} = 32768 Hz, Program executes in RAM, BCSCTL1 = CALBC1_1MHZ, DCOCTL = CALDCO_1MHZ, CPUOFF = 0, SCG0 = 0, SCG1 = 0, OSCOFF = 0		2.2 V		190		µA
				3 V		260		
$I_{AM,4kHz}$	Active mode (AM) current (4 kHz)	$f_{MCLK} = f_{SMCLK} = f_{ACLK}$ = 32768 Hz/8 = 4096 Hz, f_{DCO} = 0 Hz, Program executes in flash, SELMx = 11, SELS = 1, DIVMx = DIVSx = DIVAx = 11, CPUOFF = 0, SCG0 = 1, SCG1 = 0, OSCOFF = 0	-40°C to 85°C	2.2 V		1.2	3	µA
			105°C	2.2 V			6	
			-40°C to 85°C	3 V		1.6	4	
			105°C	3 V			7	
$I_{AM,100kHz}$	Active mode (AM) current (100 kHz)	$f_{MCLK} = f_{SMCLK} = f_{DCO(0, 0)} \approx$ 100 kHz, f_{ACLK} = 0 Hz, Program executes in flash, RSELx = 0, DCOx = 0, CPUOFF = 0, SCG0 = 0, SCG1 = 0, OSCOFF = 1	-40°C to 85°C	2.2 V		37	50	µA
			105°C	2.2 V			60	
			-40°C to 85°C	3 V		40	55	
			105°C	3 V			65	

(1) All inputs are tied to 0 V or to V_{CC}. Outputs do not source or sink any current.
(2) The currents are characterized with a Micro Crystal CC4V-T1A SMD crystal with a load capacitance of 9 pF. The internal and external load capacitance is chosen to closely match the required 9 pF.

Copyright © 2005–2012, Texas Instruments Incorporated

Typical Characteristics - Active Mode Supply Current (Into V_{CC})

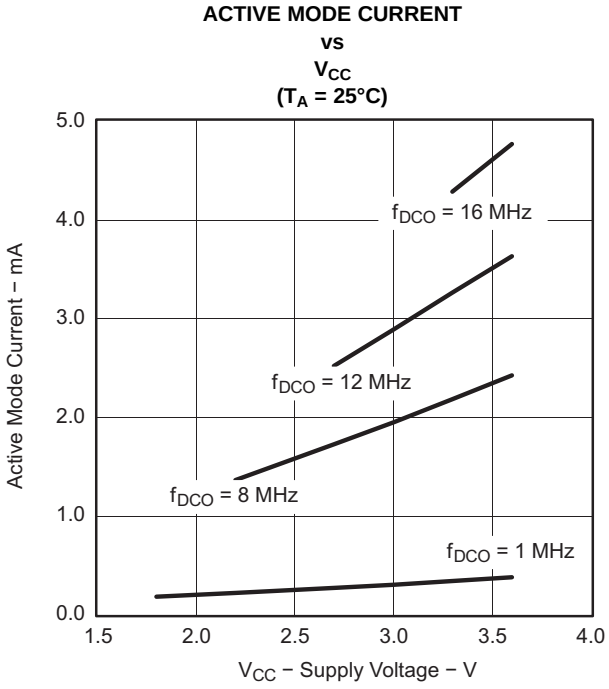

Figure 2.

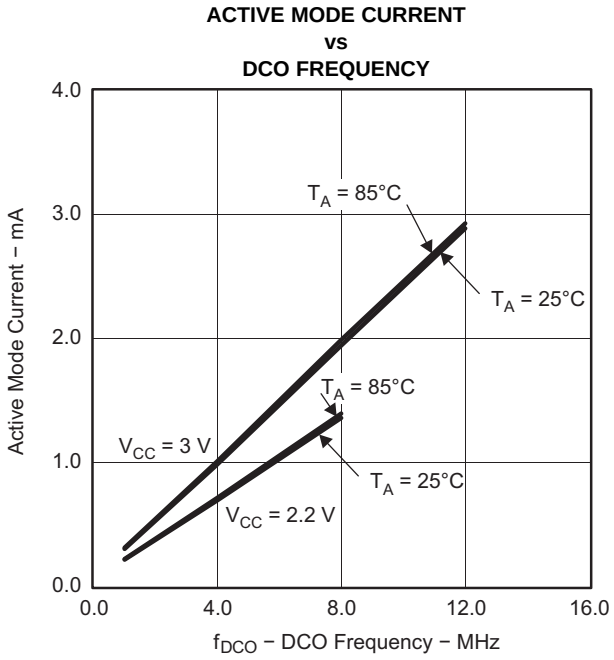

Figure 3.

Copyright © 2005–2012, Texas Instruments Incorporated

Low-Power Mode Supply Currents (Into V_{CC}) Excluding External Current

over recommended ranges of supply voltage and operating free-air temperature (unless otherwise noted)(1) (2)

PARAMETER		TEST CONDITIONS	T_A	V_{CC}	MIN	TYP	MAX	UNIT
$I_{LPM0,1MHz}$	Low-power mode 0 (LPM0) current(3)	f_{MCLK} = 0 MHz, $f_{SMCLK} = f_{DCO}$ = 1 MHz, f_{ACLK} = 32,768 Hz, BCSCTL1 = CALBC1_1MHZ, DCOCTL = CALDCO_1MHZ, CPUOFF = 1, SCG0 = 0, SCG1 = 0, OSCOFF = 0		2.2 V		65	80	µA
				3 V		85	100	
$I_{LPM0,100kHz}$	Low-power mode 0 (LPM0) current(3)	f_{MCLK} = 0 MHz, $f_{SMCLK} = f_{DCO(0, 0)} \approx 100$ kHz, f_{ACLK} = 0 Hz, RSELx = 0, DCOx = 0, CPUOFF = 1, SCG0 = 0, SCG1 = 0, OSCOFF = 1		2.2 V		37	48	µA
				3 V		41	52	
I_{LPM2}	Low-power mode 2 (LPM2) current(4)	$f_{MCLK} = f_{SMCLK}$ = 0 MHz, f_{DCO} = 1 MHz, f_{ACLK} = 32,768 Hz, BCSCTL1 = CALBC1_1MHZ, DCOCTL = CALDCO_1MHZ, CPUOFF = 1, SCG0 = 0, SCG1 = 1, OSCOFF = 0	-40°C to 85°C	2.2 V		22	29	µA
			105°C				31	
			-40°C to 85°C	3 V		25	32	
			105°C				34	
$I_{LPM3,LFXT1}$	Low-power mode 3 (LPM3) current(3)	$f_{DCO} = f_{MCLK} = f_{SMCLK}$ = 0 MHz, f_{ACLK} = 32,768 Hz, CPUOFF = 1, SCG0 = 1, SCG1 = 1, OSCOFF = 0	-40°C	2.2 V		0.7	1.2	µA
			25°C			0.7	1	
			85°C			1.4	2.3	
			105°C			3	6	
			-40°C	3 V		0.9	1.2	
			25°C			0.9	1.2	
			85°C			1.6	2.8	
			105°C			3	7	
$I_{LPM3,VLO}$	Low-power mode 3 (LPM3) current(4)	$f_{DCO} = f_{MCLK} = f_{SMCLK}$ = 0 MHz, f_{ACLK} from internal LF oscillator (VLO), CPUOFF = 1, SCG0 = 1, SCG1 = 1, OSCOFF = 0	-40°C	2.2 V		0.4	0.7	µA
			25°C			0.5	0.7	
			85°C			1	1.6	
			105°C			2	5	
			-40°C	3 V		0.5	0.9	
			25°C			0.6	0.9	
			85°C			1.3	1.8	
			105°C			2.5	6	
I_{LPM4}	Low-power mode 4 (LPM4) current(5)	$f_{DCO} = f_{MCLK} = f_{SMCLK}$ = 0 MHz, f_{ACLK} = 0 Hz, CPUOFF = 1, SCG0 = 1, SCG1 = 1, OSCOFF = 1	-40°C	2.2 V, 3 V		0.1	0.5	µA
			25°C			0.1	0.5	
			85°C			0.8	1.5	
			105°C			2	4	

(1) All inputs are tied to 0 V or to V_{CC}. Outputs do not source or sink any current.
(2) The currents are characterized with a Micro Crystal CC4V-T1A SMD crystal with a load capacitance of 9 pF.
(3) Current for brownout and WDT clocked by SMCLK included.
(4) Current for brownout and WDT clocked by ACLK included.
(5) Current for brownout included.

Copyright © 2005–2012, Texas Instruments Incorporated

Schmitt-Trigger Inputs (Ports P1 and P2)

over recommended ranges of supply voltage and operating free-air temperature (unless otherwise noted)

PARAMETER		TEST CONDITIONS	V_{CC}	MIN	TYP	MAX	UNIT
V_{IT+}	Positive-going input threshold voltage			0.45 V_{CC}		0.75 V_{CC}	V
			2.2 V	1.00		1.65	
			3 V	1.35		2.25	
V_{IT-}	Negative-going input threshold voltage			0.25 V_{CC}		0.55 V_{CC}	V
			2.2 V	0.55		1.20	
			3 V	0.75		1.65	
V_{hys}	Input voltage hysteresis (V_{IT+} - V_{IT-})		2.2 V	0.2		1.0	V
			3 V	0.3		1.0	
R_{Pull}	Pullup/pulldown resistor	For pullup: $V_{IN} = V_{SS}$, For pulldown: $V_{IN} = V_{CC}$		20	35	50	kΩ
C_I	Input capacitance	$V_{IN} = V_{SS}$ or V_{CC}			5		pF

Inputs (Ports P1 and P2)

over recommended ranges of supply voltage and operating free-air temperature (unless otherwise noted)

PARAMETER		TEST CONDITIONS	V_{CC}	MIN	TYP	MAX	UNIT
$t_{(int)}$	External interrupt timing	Port P1, P2: P1.x to P2.x, External trigger pulse width to set interrupt flag(1)	2.2 V, 3 V	20			ns

(1) An external signal sets the interrupt flag every time the minimum interrupt pulse width $t_{(int)}$ is met. It may be set even with trigger signals shorter than $t_{(int)}$.

Leakage Current (Ports P1 and P2)

over recommended ranges of supply voltage and operating free-air temperature (unless otherwise noted)

PARAMETER		TEST CONDITIONS	V_{CC}	MIN	MAX	UNIT
$I_{lkg(Px.y)}$	High-impedance leakage current	(1) (2)	2.2 V, 3 V		±50	nA

(1) The leakage current is measured with V_{SS} or V_{CC} applied to the corresponding pins, unless otherwise noted.
(2) The leakage of the digital port pins is measured individually. The port pin is selected for input and the pullup or pulldown resistor is disabled.

Copyright © 2005–2012, Texas Instruments Incorporated

Outputs (Ports P1 and P2)

over recommended ranges of supply voltage and operating free-air temperature (unless otherwise noted)

PARAMETER		TEST CONDITIONS	V_{CC}	MIN	TYP	MAX	UNIT
V_{OH}	High-level output voltage	$I_{(OHmax)}$ = -1.5 mA (1)	2.2 V	V_{CC} - 0.25		V_{CC}	V
		$I_{(OHmax)}$ = -6 mA (2)	2.2 V	V_{CC} - 0.6		V_{CC}	
		$I_{(OHmax)}$ = -1.5 mA (1)	3 V	V_{CC} - 0.25		V_{CC}	
		$I_{(OHmax)}$ = -6 mA (2)	3 V	V_{CC} - 0.6		V_{CC}	
V_{OL}	Low-level output voltage	$I_{(OLmax)}$ = 1.5 mA (1)	2.2 V	V_{SS}		V_{SS} + 0.25	V
		$I_{(OLmax)}$ = 6 mA (2)	2.2 V	V_{SS}		V_{SS} + 0.6	
		$I_{(OLmax)}$ = 1.5 mA (1)	3 V	V_{SS}		V_{SS} + 0.25	
		$I_{(OLmax)}$ = 6 mA (2)	3 V	V_{SS}		V_{SS} + 0.6	

(1) The maximum total current, $I_{(OHmax)}$ and $I_{(OLmax)}$, for all outputs combined should not exceed ±12 mA to hold the maximum voltage drop specified.
(2) The maximum total current, $I_{(OHmax)}$ and $I_{(OLmax)}$, for all outputs combined should not exceed ±48 mA to hold the maximum voltage drop specified.

Output Frequency (Ports P1 and P2)

over recommended ranges of supply voltage and operating free-air temperature (unless otherwise noted)

PARAMETER		TEST CONDITIONS	V_{CC}	MIN	TYP	MAX	UNIT
$f_{Px.y}$	Port output frequency (with load)	P1.4/SMCLK, C_L = 20 pF, R_L = 1 kΩ (1) (2)	2.2 V			10	MHz
			3 V			12	
$f_{Port°CLK}$	Clock output frequency	P2.0/ACLK, P1.4/SMCLK, C_L = 20 pF (2)	2.2 V			12	MHz
			3 V			16	

(1) A resistive divider with 2 × 0.5 kΩ between V_{CC} and V_{SS} is used as load. The output is connected to the center tap of the divider.
(2) The output voltage reaches at least 10% and 90% V_{CC} at the specified toggle frequency.

Copyright © 2005–2012, Texas Instruments Incorporated

Typical Characteristics - Outputs

over recommended ranges of supply voltage and operating free-air temperature (unless otherwise noted)

LOW-LEVEL OUTPUT CURRENT vs LOW-LEVEL OUTPUT VOLTAGE

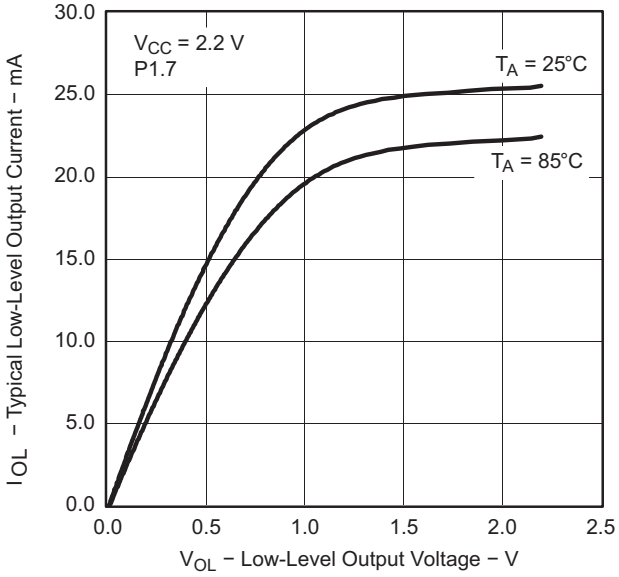

Figure 4.

LOW-LEVEL OUTPUT CURRENT vs LOW-LEVEL OUTPUT VOLTAGE

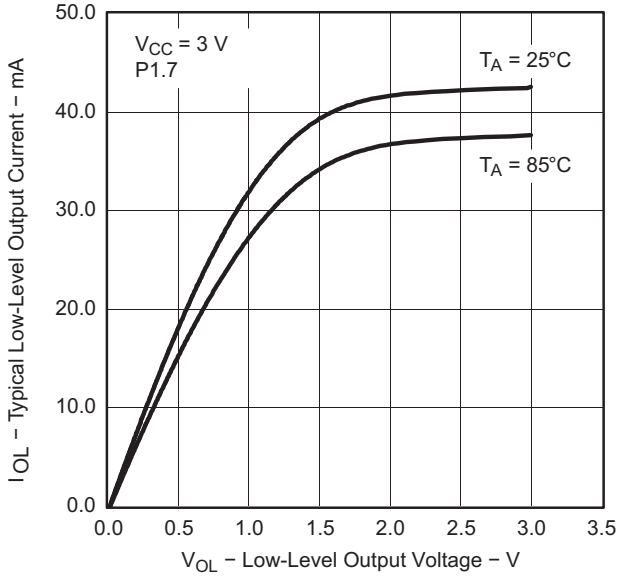

Figure 5.

HIGH-LEVEL OUTPUT CURRENT vs HIGH-LEVEL OUTPUT VOLTAGE

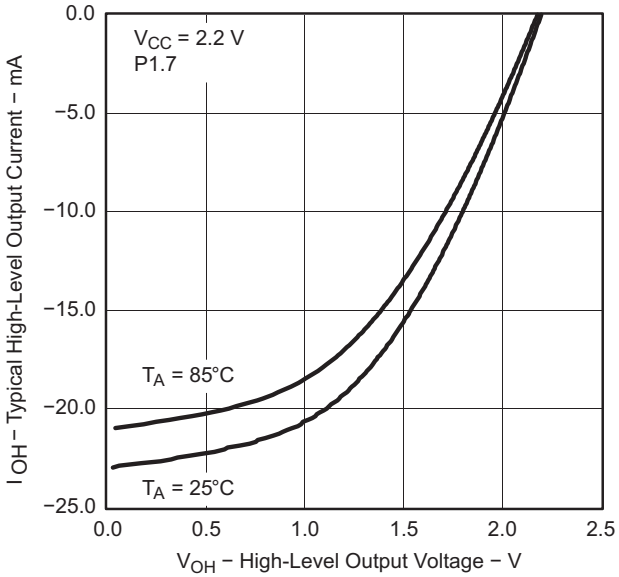

Figure 6.

HIGH-LEVEL OUTPUT CURRENT vs HIGH-LEVEL OUTPUT VOLTAGE

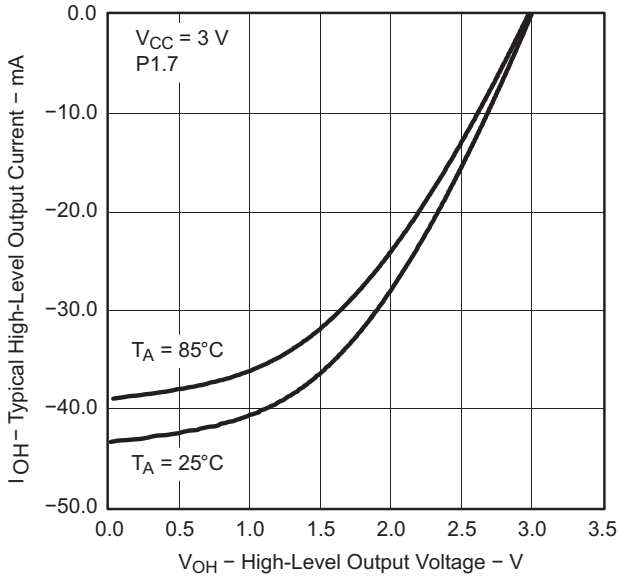

Figure 7.

Copyright © 2005–2012, Texas Instruments Incorporated

POR and Brownout Reset (BOR)(1)(2)

over recommended ranges of supply voltage and operating free-air temperature (unless otherwise noted)

PARAMETER		TEST CONDITIONS	V_{CC}	MIN	TYP	MAX	UNIT
$V_{CC(start)}$	See Figure 8	$dV_{CC}/dt \le 3$ V/s			0.7 × $V_{(B_IT-)}$		V
$V_{(B_IT-)}$	See Figure 8 through Figure 10	$dV_{CC}/dt \le 3$ V/s				1.71	V
$V_{hys(B_IT-)}$	See Figure 8	$dV_{CC}/dt \le 3$ V/s		70	130	210	mV
$t_{d(BOR)}$	See Figure 8					2000	µs
$t_{(reset)}$	Pulse duration needed at $\overline{RST}$/NMI pin to accept reset internally		2.2 V, 3 V	2			µs

(1) The current consumption of the brownout module is already included in the I_{CC} current consumption data. The voltage level $V_{(B_IT-)} + V_{hys(B_IT-)}$is ≤ 1.8 V.

(2) During power up, the CPU begins code execution following a period of $t_{d(BOR)}$ after $V_{CC} = V_{(B_IT-)} + V_{hys(B_IT-)}$. The default DCO settings must not be changed until $V_{CC} \ge V_{CC(min)}$, where $V_{CC(min)}$ is the minimum supply voltage for the desired operating frequency.

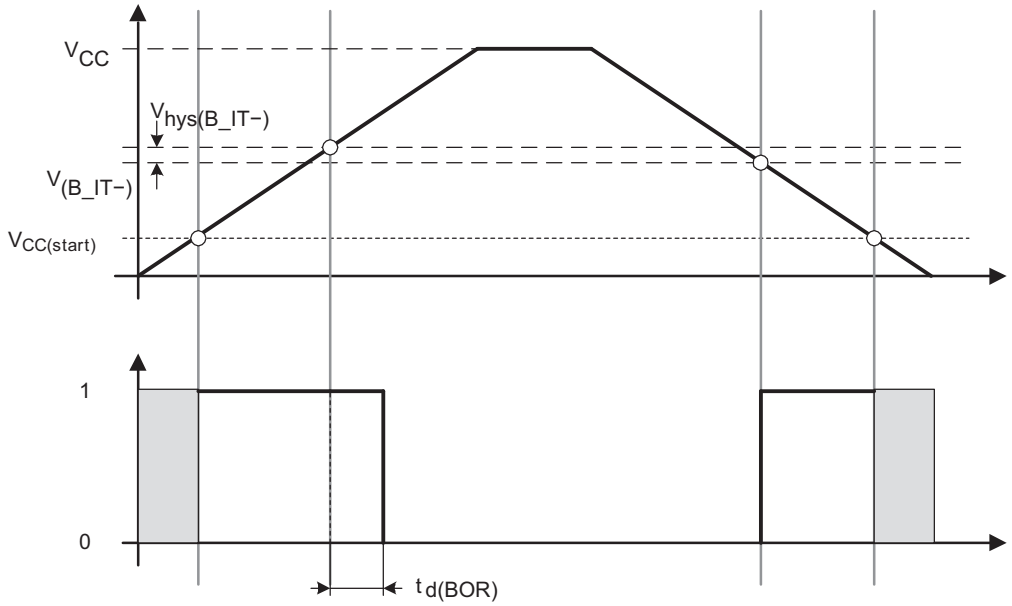

Figure 8. POR/Brownout Reset (BOR) vs Supply Voltage

Typical Characteristics - POR/Brownout Reset (BOR)

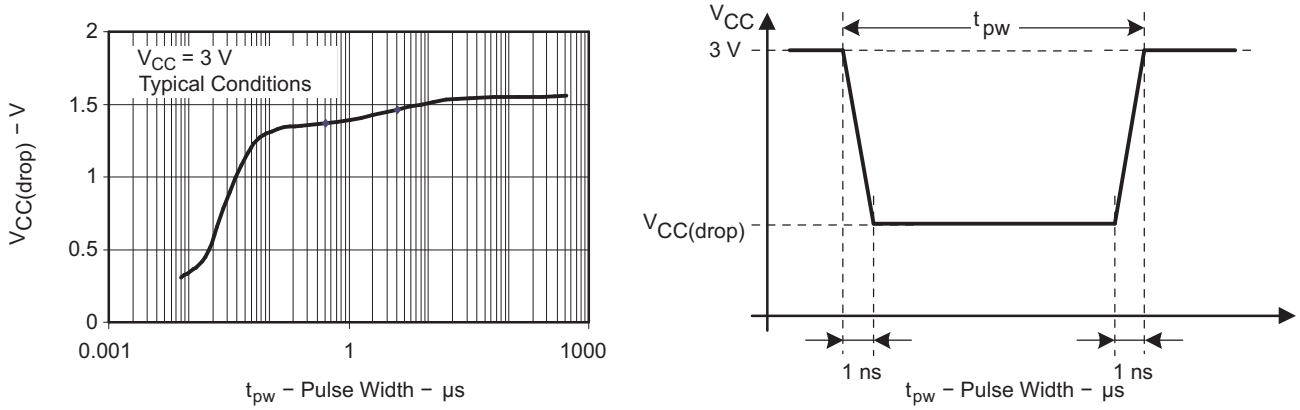

Figure 9. $V_{CC(drop)}$ Level With a Square Voltage Drop to Generate a POR/Brownout Signal

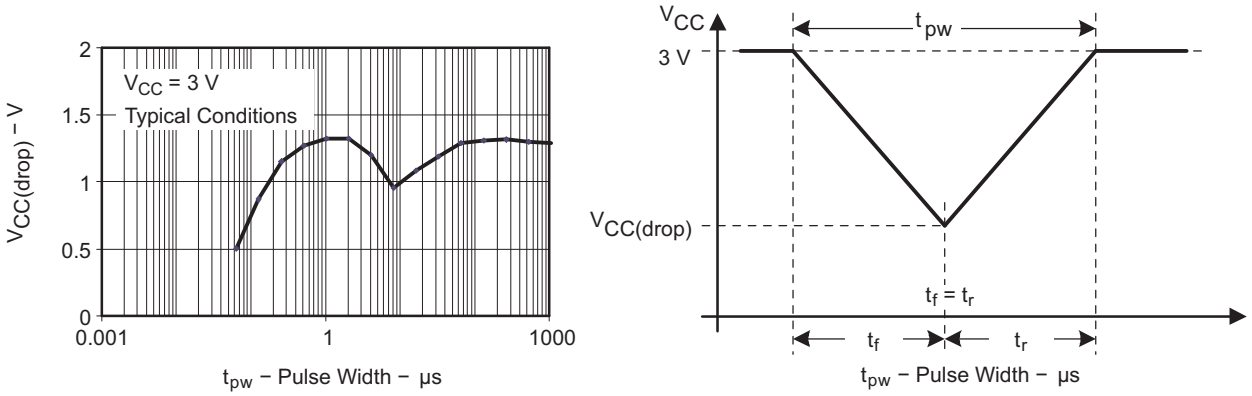

Figure 10. $V_{CC(drop)}$ Level With a Triangle Voltage Drop to Generate a POR/Brownout Signal

Copyright © 2005–2012, Texas Instruments Incorporated

Main DCO Characteristics

- All ranges selected by RSELx overlap with RSELx + 1: RSELx = 0 overlaps RSELx = 1, ... RSELx = 14 overlaps RSELx = 15.
- DCO control bits DCOx have a step size as defined by parameter S_{DCO}.
- Modulation control bits MODx select how often $f_{DCO(RSEL,DCO+1)}$ is used within the period of 32 DCOCLK cycles. The frequency $f_{DCO(RSEL,DCO)}$ is used for the remaining cycles. The frequency is an average equal to:

$$f_{average} = \frac{32 \times f_{DCO(RSEL,DCO)} \times f_{DCO(RSEL,DCO+1)}}{MOD \times f_{DCO(RSEL,DCO)} + (32 - MOD) \times f_{DCO(RSEL,DCO+1)}}$$

DCO Frequency

over recommended ranges of supply voltage and operating free-air temperature (unless otherwise noted)

PARAMETER		TEST CONDITIONS	V_{CC}	MIN	TYP	MAX	UNIT
V_{CC}	Supply voltage	RSELx < 14		1.8		3.6	V
		RSELx = 14		2.2		3.6	
		RSELx = 15		3.0		3.6	
$f_{DCO(0,0)}$	DCO frequency (0, 0)	RSELx = 0, DCOx = 0, MODx = 0	2.2 V, 3 V	0.06		0.14	MHz
$f_{DCO(0,3)}$	DCO frequency (0, 3)	RSELx = 0, DCOx = 3, MODx = 0	2.2 V, 3 V	0.07		0.17	MHz
$f_{DCO(1,3)}$	DCO frequency (1, 3)	RSELx = 1, DCOx = 3, MODx = 0	2.2 V, 3 V	0.10		0.20	MHz
$f_{DCO(2,3)}$	DCO frequency (2, 3)	RSELx = 2, DCOx = 3, MODx = 0	2.2 V, 3 V	0.14		0.28	MHz
$f_{DCO(3,3)}$	DCO frequency (3, 3)	RSELx = 3, DCOx = 3, MODx = 0	2.2 V, 3 V	0.20		0.40	MHz
$f_{DCO(4,3)}$	DCO frequency (4, 3)	RSELx = 4, DCOx = 3, MODx = 0	2.2 V, 3 V	0.28		0.54	MHz
$f_{DCO(5,3)}$	DCO frequency (5, 3)	RSELx = 5, DCOx = 3, MODx = 0	2.2 V, 3 V	0.39		0.77	MHz
$f_{DCO(6,3)}$	DCO frequency (6, 3)	RSELx = 6, DCOx = 3, MODx = 0	2.2 V, 3 V	0.54		1.06	MHz
$f_{DCO(7,3)}$	DCO frequency (7, 3)	RSELx = 7, DCOx = 3, MODx = 0	2.2 V, 3 V	0.80		1.50	MHz
$f_{DCO(8,3)}$	DCO frequency (8, 3)	RSELx = 8, DCOx = 3, MODx = 0	2.2 V, 3 V	1.10		2.10	MHz
$f_{DCO(9,3)}$	DCO frequency (9, 3)	RSELx = 9, DCOx = 3, MODx = 0	2.2 V, 3 V	1.60		3.00	MHz
$f_{DCO(10,3)}$	DCO frequency (10, 3)	RSELx = 10, DCOx = 3, MODx = 0	2.2 V, 3 V	2.50		4.30	MHz
$f_{DCO(11,3)}$	DCO frequency (11, 3)	RSELx = 11, DCOx = 3, MODx = 0	2.2 V, 3 V	3.00		5.50	MHz
$f_{DCO(12,3)}$	DCO frequency (12, 3)	RSELx = 12, DCOx = 3, MODx = 0	2.2 V, 3 V	4.30		7.30	MHz
$f_{DCO(13,3)}$	DCO frequency (13, 3)	RSELx = 13, DCOx = 3, MODx = 0	2.2 V, 3 V	6.00		9.60	MHz
$f_{DCO(14,3)}$	DCO frequency (14, 3)	RSELx = 14, DCOx = 3, MODx = 0	2.2 V, 3 V	8.60		13.9	MHz
$f_{DCO(15,3)}$	DCO frequency (15, 3)	RSELx = 15, DCOx = 3, MODx = 0	3 V	12.0		18.5	MHz
$f_{DCO(15,7)}$	DCO frequency (15, 7)	RSELx = 15, DCOx = 7, MODx = 0	3 V	16.0		26.0	MHz
S_{RSEL}	Frequency step between range RSEL and RSEL+1	$S_{RSEL} = f_{DCO(RSEL+1,DCO)}/f_{DCO(RSEL,DCO)}$	2.2 V, 3 V			1.55	ratio
S_{DCO}	Frequency step between tap DCO and DCO+1	$S_{DCO} = f_{DCO(RSEL,DCO+1)}/f_{DCO(RSEL,DCO)}$	2.2 V, 3 V	1.05	1.08	1.12	
	Duty cycle	Measured at P1.4/SMCLK	2.2 V, 3 V	40	50	60	%

Copyright © 2005–2012, Texas Instruments Incorporated

Calibrated DCO Frequencies - Tolerance at Calibration

over recommended ranges of supply voltage and operating free-air temperature (unless otherwise noted)

PARAMETER		TEST CONDITIONS	T_A	V_{CC}	MIN	TYP	MAX	UNIT
	Frequency tolerance at calibration		25°C	3 V	-1	±0.2	+1	%
$f_{CAL(1MHz)}$	1-MHz calibration value	BCSCTL1 = CALBC1_1MHZ, DCOCTL = CALDCO_1MHZ, Gating time: 5 ms	25°C	3 V	0.990	1	1.010	MHz
$f_{CAL(8MHz)}$	8-MHz calibration value	BCSCTL1 = CALBC1_8MHZ, DCOCTL = CALDCO_8MHZ, Gating time: 5 ms	25°C	3 V	7.920	8	8.080	MHz
$f_{CAL(12MHz)}$	12-MHz calibration value	BCSCTL1 = CALBC1_12MHZ, DCOCTL = CALDCO_12MHZ, Gating time: 5 ms	25°C	3 V	11.88	12	12.12	MHz
$f_{CAL(16MHz)}$	16-MHz calibration value	BCSCTL1 = CALBC1_16MHZ, DCOCTL = CALDCO_16MHZ, Gating time: 2 ms	25°C	3 V	15.84	16	16.16	MHz

Calibrated DCO Frequencies - Tolerance Over Temperature 0°C to 85°C

over recommended ranges of supply voltage and operating free-air temperature (unless otherwise noted)

PARAMETER		TEST CONDITIONS	T_A	V_{CC}	MIN	TYP	MAX	UNIT
	1-MHz tolerance over temperature		0°C to 85°C	3 V	-2.5	±0.5	+2.5	%
	8-MHz tolerance over temperature		0°C to 85°C	3 V	-2.5	±1.0	+2.5	%
	12-MHz tolerance over temperature		0°C to 85°C	3 V	-2.5	±1.0	+2.5	%
	16-MHz tolerance over temperature		0°C to 85°C	3 V	-3	±2.0	+3	%
$f_{CAL(1MHz)}$	1-MHz calibration value	BCSCTL1 = CALBC1_1MHZ, DCOCTL = CALDCO_1MHZ, Gating time: 5 ms	0°C to 85°C	2.2 V	0.97	1	1.03	MHz
				3 V	0.975	1	1.025	
				3.6 V	0.97	1	1.03	
$f_{CAL(8MHz)}$	8-MHz calibration value	BCSCTL1 = CALBC1_8MHZ, DCOCTL = CALDCO_8MHZ, Gating time: 5 ms	0°C to 85°C	2.2 V	7.76	8	8.4	MHz
				3 V	7.8	8	8.2	
				3.6 V	7.6	8	8.24	
$f_{CAL(12MHz)}$	12-MHz calibration value	BCSCTL1 = CALBC1_12MHZ, DCOCTL = CALDCO_12MHZ, Gating time: 5 ms	0°C to 85°C	2.2 V	11.7	12	12.3	MHz
				3 V	11.7	12	12.3	
				3.6 V	11.7	12	12.3	
$f_{CAL(16MHz)}$	16-MHz calibration value	BCSCTL1 = CALBC1_16MHZ, DCOCTL = CALDCO_16MHZ, Gating time: 2 ms	0°C to 85°C	3 V	15.52	16	16.48	MHz
				3.6 V	15	16	16.48	

Copyright © 2005–2012, Texas Instruments Incorporated

Calibrated DCO Frequencies - Tolerance Over Supply Voltage V_{CC}

over recommended ranges of supply voltage and operating free-air temperature (unless otherwise noted)

PARAMETER		TEST CONDITIONS	T_A	V_{CC}	MIN	TYP	MAX	UNIT
	1-MHz tolerance over V_{CC}		25°C	1.8 V to 3.6 V	-3	±2	+3	%
	8-MHz tolerance over V_{CC}		25°C	1.8 V to 3.6 V	-3	±2	+3	%
	12-MHz tolerance over V_{CC}		25°C	2.2 V to 3.6 V	-3	±2	+3	%
	16-MHz tolerance over V_{CC}		25°C	3 V to 3.6 V	-6	±2	+3	%
$f_{CAL(1MHz)}$	1-MHz calibration value	BCSCTL1 = CALBC1_1MHZ, DCOCTL = CALDCO_1MHZ, Gating time: 5 ms	25°C	1.8 V to 3.6 V	0.97	1	1.03	MHz
$f_{CAL(8MHz)}$	8-MHz calibration value	BCSCTL1 = CALBC1_8MHZ, DCOCTL = CALDCO_8MHZ, Gating time: 5 ms	25°C	1.8 V to 3.6 V	7.76	8	8.24	MHz
$f_{CAL(12MHz)}$	12-MHz calibration value	BCSCTL1 = CALBC1_12MHZ, DCOCTL = CALDCO_12MHZ, Gating time: 5 ms	25°C	2.2 V to 3.6 V	11.64	12	12.36	MHz
$f_{CAL(16MHz)}$	16-MHz calibration value	BCSCTL1 = CALBC1_16MHZ, DCOCTL = CALDCO_16MHZ, Gating time: 2 ms	25°C	3 V to 3.6 V	15	16	16.48	MHz

Calibrated DCO Frequencies - Overall Tolerance

over recommended ranges of supply voltage and operating free-air temperature (unless otherwise noted)

PARAMETER		TEST CONDITIONS	T_A	V_{CC}	MIN	TYP	MAX	UNIT
	1-MHz tolerance overall		I: -40°C to 85°C T: -40°C to 105°C	1.8 V to 3.6 V	-5	±2	+5	%
	8-MHz tolerance overall		I: -40°C to 85°C T: -40°C to 105°C	1.8 V to 3.6 V	-5	±2	+5	%
	12-MHz tolerance overall		I: -40°C to 85°C T: -40°C to 105°C	2.2 V to 3.6 V	-5	±2	+5	%
	16-MHz tolerance overall		I: -40°C to 85°C T: -40°C to 105°C	3 V to 3.6 V	-6	±3	+6	%
$f_{CAL(1MHz)}$	1-MHz calibration value	BCSCTL1 = CALBC1_1MHZ, DCOCTL = CALDCO_1MHZ, Gating time: 5 ms	I: -40°C to 85°C T: -40°C to 105°C	1.8 V to 3.6 V	0.95	1	1.05	MHz
$f_{CAL(8MHz)}$	8-MHz calibration value	BCSCTL1 = CALBC1_8MHZ, DCOCTL = CALDCO_8MHZ, Gating time: 5 ms	I: -40°C to 85°C T: -40°C to 105°C	1.8 V to 3.6 V	7.6	8	8.4	MHz
$f_{CAL(12MHz)}$	12-MHz calibration value	BCSCTL1 = CALBC1_12MHZ, DCOCTL = CALDCO_12MHZ, Gating time: 5 ms	I: -40°C to 85°C T: -40°C to 105°C	2.2 V to 3.6 V	11.4	12	12.6	MHz
$f_{CAL(16MHz)}$	16-MHz calibration value	BCSCTL1 = CALBC1_16MHZ, DCOCTL = CALDCO_16MHZ, Gating time: 2 ms	I: -40°C to 85°C T: -40°C to 105°C	3 V to 3.6 V	15	16	17	MHz

Copyright © 2005–2012, Texas Instruments Incorporated

Typical Characteristics - Calibrated 1-MHz DCO Frequency

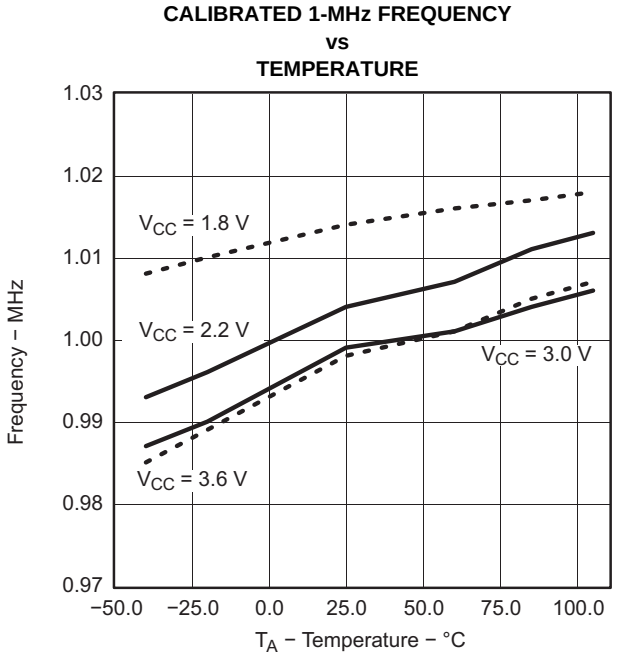

Figure 11.

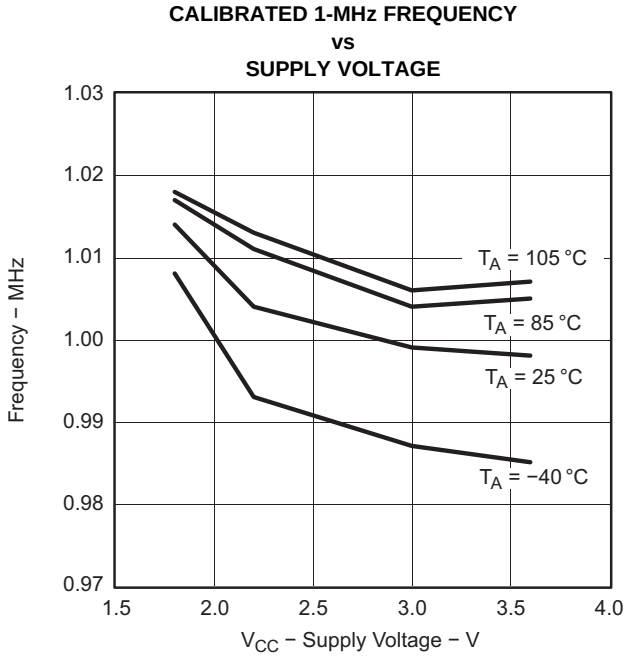

Figure 12.

Copyright © 2005–2012, Texas Instruments Incorporated

Wake-Up From Lower-Power Modes (LPM3, LPM4)

over recommended ranges of supply voltage and operating free-air temperature (unless otherwise noted)

PARAMETER		TEST CONDITIONS	V_{CC}	MIN	TYP	MAX	UNIT
$t_{DCO,LPM3/4}$	DCO clock wake-up time from LPM3 or LPM4 (1)	BCSCTL1 = CALBC1_1MHZ, DCOCTL = CALDCO_1MHZ	2.2 V, 3 V			2	µs
		BCSCTL1 = CALBC1_8MHZ, DCOCTL = CALDCO_8MHZ				1.5	
		BCSCTL1 = CALBC1_12MHZ, DCOCTL = CALDCO_12MHZ				1	
		BCSCTL1 = CALBC1_16MHZ, DCOCTL = CALDCO_16MHZ	3 V			1	
$t_{CPU,LPM3/4}$	CPU wake-up time from LPM3 or LPM4 (2)				$1 / f_{MCLK} + t_{Clock,LPM3/4}$		

(1) The DCO clock wake-up time is measured from the edge of an external wake-up signal (for example, port interrupt) to the first clock edge observable externally on a clock pin (MCLK or SMCLK).
(2) Parameter applicable only if DCOCLK is used for MCLK.

Typical Characteristics - DCO Clock Wake-Up Time From LPM3 or LPM4

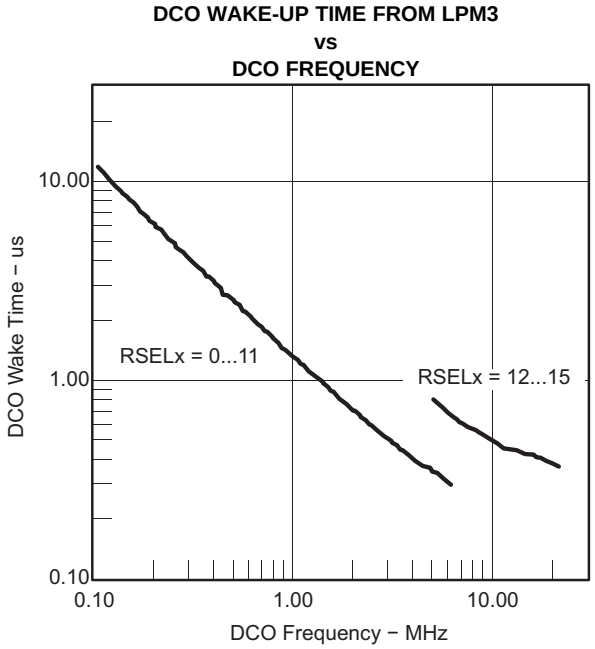

Figure 13.

Crystal Oscillator, XT1, Low-Frequency Mode(1)

over recommended ranges of supply voltage and operating free-air temperature (unless otherwise noted)

PARAMETER		TEST CONDITIONS	V_{CC}	MIN	TYP	MAX	UNIT
$f_{LFXT1,LF}$	LFXT1 oscillator crystal frequency, LF mode 0, 1	XTS = 0, LFXT1Sx = 0 or 1	1.8 V to 3.6 V		32768		Hz
$f_{LFXT1,LF,logic}$	LFXT1 oscillator logic level square wave input frequency, LF mode	XTS = 0, LFXT1Sx = 3	1.8 V to 3.6 V	10000	32768	50000	Hz
OA_{LF}	Oscillation allowance for LF crystals	XTS = 0, LFXT1Sx = 0, $f_{LFXT1,LF}$ = 32768 Hz, $C_{L,eff}$ = 6 pF			500		kΩ
		XTS = 0, LFXT1Sx = 0, $f_{LFXT1,LF}$ = 32768 Hz, $C_{L,eff}$ = 12 pF			200		
$C_{L,eff}$	Integrated effective load capacitance, LF mode(2)	XTS = 0, XCAPx = 0			1		pF
		XTS = 0, XCAPx = 1			5.5		
		XTS = 0, XCAPx = 2			8.5		
		XTS = 0, XCAPx = 3			11		
	Duty cycle, LF mode	XTS = 0, Measured at P1.0/ACLK, $f_{LFXT1,LF}$ = 32768 Hz	2.2 V, 3 V	30	50	70	%
$f_{Fault,LF}$	Oscillator fault frequency, LF mode(3)	XTS = 0, LFXT1Sx = 3(4)	2.2 V, 3 V	10		10000	Hz

(1) To improve EMI on the XT1 oscillator, the following guidelines should be observed.
(a) Keep the trace between the device and the crystal as short as possible.
(b) Design a good ground plane around the oscillator pins.
(c) Prevent crosstalk from other clock or data lines into oscillator pins XIN and XOUT.
(d) Avoid running PCB traces underneath or adjacent to the XIN and XOUT pins.
(e) Use assembly materials and praxis to avoid any parasitic load on the oscillator XIN and XOUT pins.
(f) If conformal coating is used, ensure that it does not induce capacitive/resistive leakage between the oscillator pins.
(g) Do not route the XOUT line to the JTAG header to support the serial programming adapter as shown in other documentation. This signal is no longer required for the serial programming adapter.

(2) Includes parasitic bond and package capacitance (approximately 2 pF per pin).
Since the PCB adds additional capacitance, it is recommended to verify the correct load by measuring the ACLK frequency. For a correct setup, the effective load capacitance should always match the specification of the used crystal.

(3) Frequencies below the MIN specification set the fault flag. Frequencies above the MAX specification do not set the fault flag. Frequencies in between might set the flag.

(4) Measured with logic-level input frequency but also applies to operation with crystals.

Internal Very-Low-Power Low-Frequency Oscillator (VLO)

over recommended ranges of supply voltage and operating free-air temperature (unless otherwise noted)

PARAMETER		T_A	V_{CC}	MIN	TYP	MAX	UNIT
f_{VLO}	VLO frequency	-40°C to 85°C	2.2 V, 3 V	4	12	20	kHz
		105°C				22	
df_{VLO}/dT	VLO frequency temperature drift(1)	I: -40°C to 85°C T: -40°C to 105°C	2.2 V, 3 V		0.5		%/°C
df_{VLO}/dV_{CC}	VLO frequency supply voltage drift(2)	25°C	1.8 V to 3.6 V		4		%/V

(1) Calculated using the box method:
I: (MAX(-40 to 85°C) - MIN(-40 to 85°C)) / MIN(-40 to 85°C) / (85°C - (-40°C))
T: (MAX(-40 to 105°C) - MIN(-40 to 105°C)) / MIN(-40 to 105°C) / (105°C - (-40°C))

(2) Calculated using the box method: (MAX(1.8 to 3.6 V) - MIN(1.8 to 3.6 V)) / MIN(1.8 to 3.6 V) / (3.6 V - 1.8 V)

Timer_A

over recommended ranges of supply voltage and operating free-air temperature (unless otherwise noted)

PARAMETER		TEST CONDITIONS	V_{CC}	MIN	TYP	MAX	UNIT
f_{TA}	Timer_A clock frequency	Internal: SMCLK, ACLK External: TACLK, INCLK Duty cycle = 50% ± 10%	2.2 V			10	MHz
			3 V			16	
$t_{TA,cap}$	Timer_A capture timing	TA0, TA1	2.2 V, 3 V	20			ns

Copyright © 2005–2012, Texas Instruments Incorporated

USI, Universal Serial Interface (MSP430F20x2, MSP430F20x3)

over recommended ranges of supply voltage and operating free-air temperature (unless otherwise noted)

PARAMETER		TEST CONDITIONS	V_{CC}	MIN	TYP	MAX	UNIT
f_{USI}	USI clock frequency	External: SCLK, Duty cycle = 50% ±10%, SPI slave mode	2.2 V			10	MHz
			3 V			16	
$V_{OL,I2C}$	Low-level output voltage on SDA and SCL	USI module in I2C mode, $I_{(OLmax)}$ = 1.5 mA	2.2 V, 3 V	V_{SS}		V_{SS} + 0.4	V

Typical Characteristics, USI Low-Level Output Voltage on SDA and SCL (MSP430F20x2, MSP430F20x3)

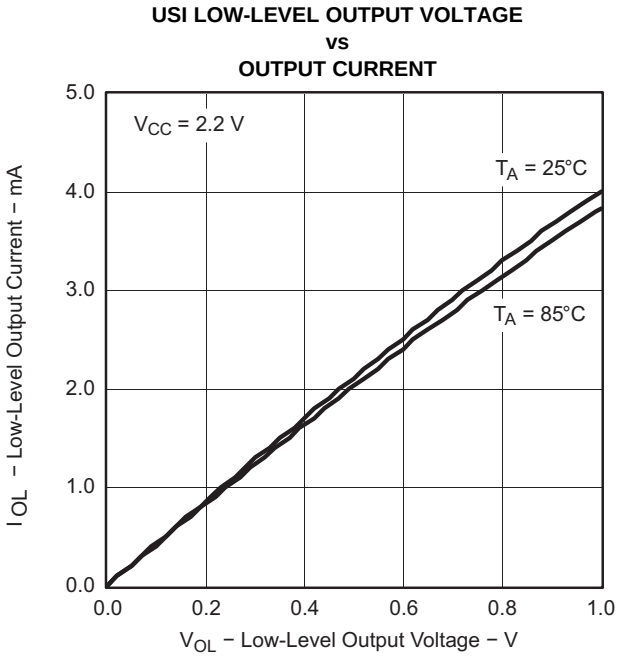

Figure 14.

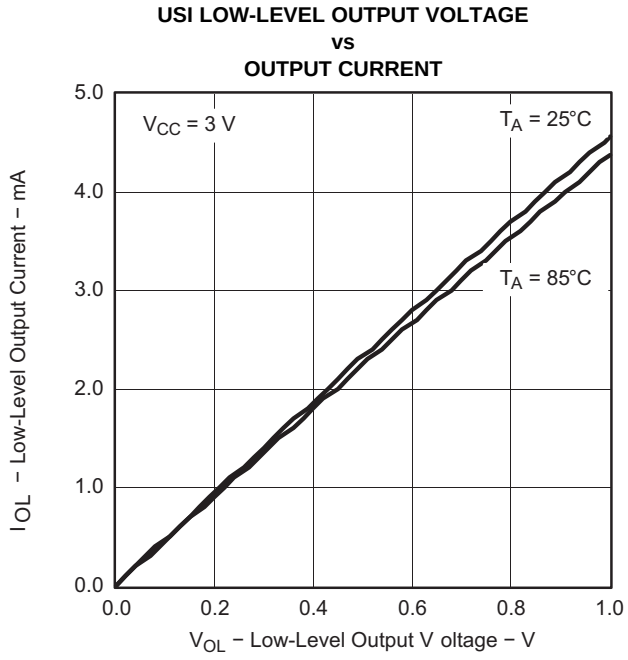

Figure 15.

Copyright © 2005–2012, Texas Instruments Incorporated

Comparator_A+ (MSP430F20x1)(1)

over recommended operating free-air temperature range (unless otherwise noted)

PARAMETER		TEST CONDITIONS	V_{CC}	MIN	TYP	MAX	UNIT
$I_{(DD)}$		CAON = 1, CARSEL = 0, CAREF = 0	2.2 V		25	40	µA
			3 V		45	60	
$I_{(Refladder/RefDiode)}$		CAON = 1, CARSEL = 0, CAREF = 1/2/3, No load at P1.0/CA0 and P1.1/CA1	2.2 V		30	50	µA
			3 V		45	71	
V_{IC}	Common-mode input voltage range	CAON = 1	2.2 V, 3 V	0		V_{CC} - 1	V
$V_{(Ref025)}$	Voltage at 0.25 V_{CC} node / V_{CC}	PCA0 = 1, CARSEL = 1, CAREF = 1, No load at P1.0/CA0 and P1.1/CA1	2.2 V, 3 V	0.23	0.24	0.25	
$V_{(Ref050)}$	Voltage at 0.5 V_{CC} node / V_{CC}	PCA0 = 1, CARSEL = 1, CAREF = 2, No load at P1.0/CA0 and P1.1/CA1	2.2 V, 3 V	0.47	0.48	0.5	
$V_{(RefVT)}$	See Figure 20 and Figure 21	PCA0 = 1, CARSEL = 1, CAREF = 3, No load at P1.0/CA0 and P1.1/CA1, T_A = 85°C	2.2 V	390	480	540	mV
			3 V	400	490	550	
V_p - V_S	Offset voltage(2)		2.2 V, 3 V	-30		30	mV
V_{hys}	Input hysteresis	CAON = 1	2.2 V, 3 V	0	0.7	1.4	mV
$t_{(response)}$	Response time (low-high and high-low)	T_A = 25°C, Overdrive 10 mV, Without filter: CAF = 0(3) (see Figure 16 and Figure 17)	2.2 V	80	165	300	ns
			3 V	70	120	240	
		T_A = 25°C, Overdrive 10 mV, With filter: CAF = 1(3) (see Figure 16 and Figure 17)	2.2 V	1.4	1.9	2.8	µs
			3 V	0.9	1.5	2.2	

(1) The leakage current for the Comparator_A+ terminals is identical to $I_{lkg(Px.y)}$ specification.
(2) The input offset voltage can be cancelled by using the CAEX bit to invert the Comparator_A+ inputs on successive measurements. The two successive measurements are then summed together.
(3) Response time measured at P1.3/CAOUT

Copyright © 2005–2012, Texas Instruments Incorporated

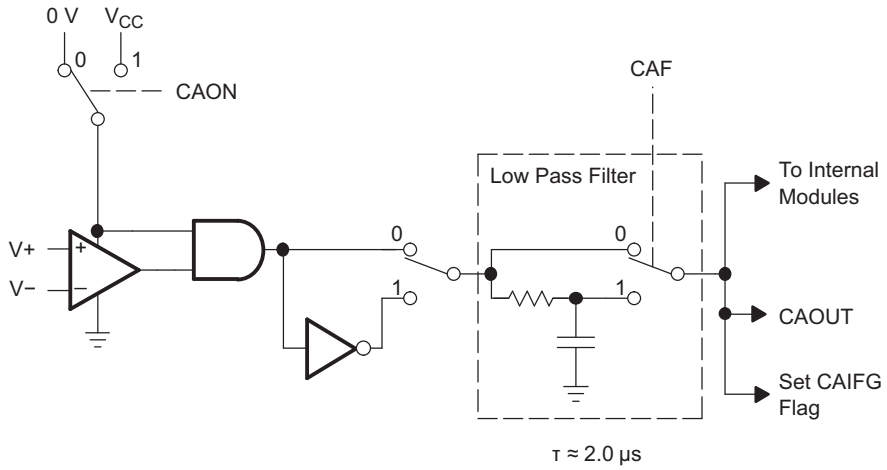

Figure 16. Block Diagram of Comparator_A+ Module

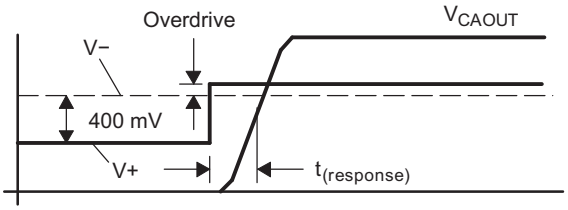

Figure 17. Overdrive Definition

Figure 18. Comparator_A+ Short Resistance Test Condition

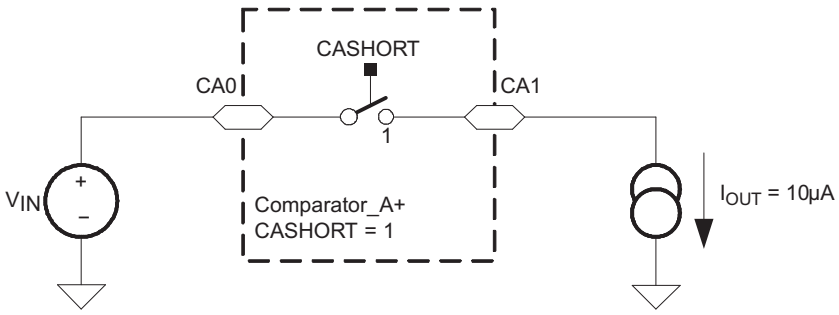

Figure 19. Comparator_A+ Short Resistance Test Condition

Typical Characteristics, Comparator_A+ (MSP430x20x1)

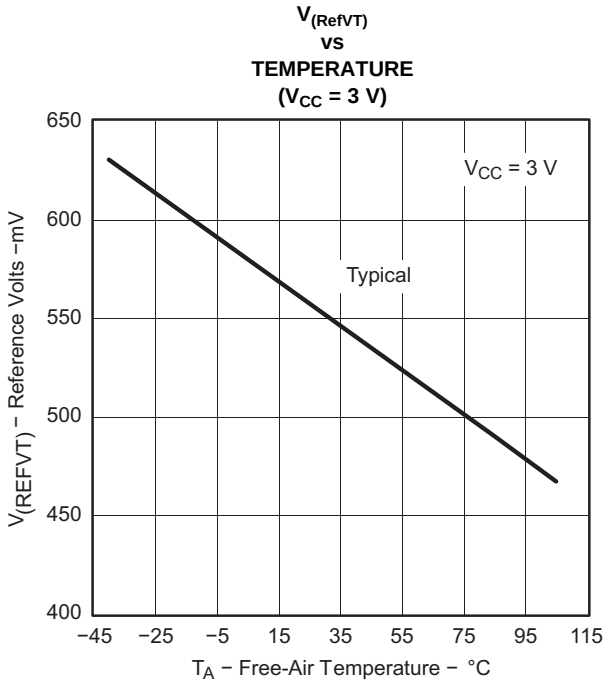

Figure 20.

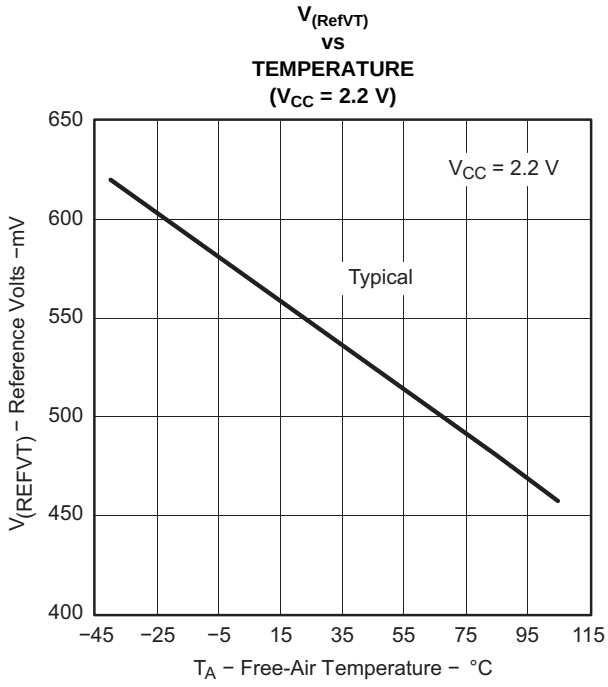

Figure 21.

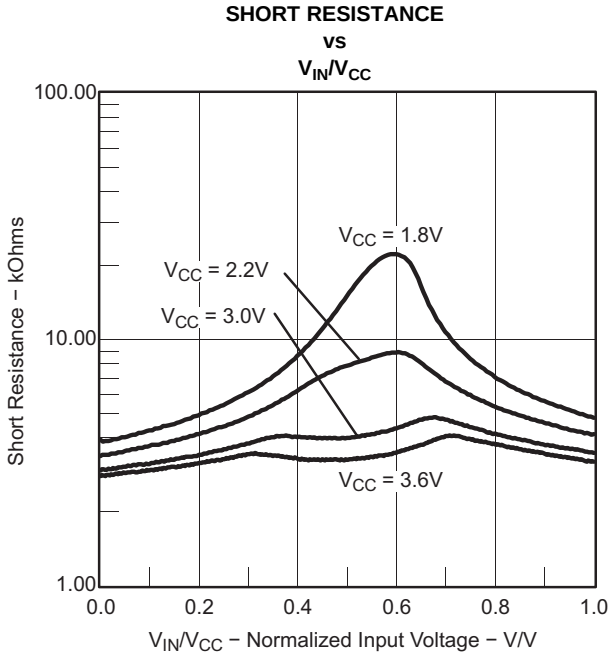

Figure 22.

Copyright © 2005–2012, Texas Instruments Incorporated

10-Bit ADC, Power Supply and Input Range Conditions (MSP430F20x2)[1]

over recommended ranges of supply voltage and operating free-air temperature (unless otherwise noted)[1]

PARAMETER		TEST CONDITIONS	T_A	V_{CC}	MIN	TYP	MAX	UNIT
V_{CC}	Analog supply voltage range	V_{SS} = 0 V			2.2		3.6	V
V_{Ax}	Analog input voltage range[2]	All Ax terminals, Analog inputs selected in ADC10AE register			0		V_{CC}	V
I_{ADC10}	ADC10 supply current[3]	$f_{ADC10CLK}$ = 5 MHz, ADC10ON = 1, REFON = 0, ADC10SHT0 = 1, ADC10SHT1 = 0, ADC10DIV = 0	I: -40°C to 85°C T: -40°C to 105°C	2.2 V		0.52	1.05	mA
				3 V		0.6	1.2	
I_{REF+}	Reference supply current, reference buffer disabled[4]	$f_{ADC10CLK}$ = 5 MHz, ADC10ON = 0, REF2_5V = 0, REFON = 1, REFOUT = 0	I: -40°C to 85°C T: -40°C to 105°C	2.2 V, 3 V		0.25	0.4	mA
		$f_{ADC10CLK}$ = 5 MHz, ADC10ON = 0, REF2_5V = 1, REFON = 1, REFOUT = 0		3 V		0.25	0.4	
$I_{REFB,0}$	Reference buffer supply current with ADC10SR = 0[4]	$f_{ADC10CLK}$ = 5 MHz ADC10ON = 0, REFON = 1, REF2_5V = 0, REFOUT = 1, ADC10SR = 0	-40°C to 85°C	2.2 V, 3 V		1.1	1.4	mA
			105°C	2.2 V, 3 V			1.8	
$I_{REFB,1}$	Reference buffer supply current with ADC10SR = 1[4]	$f_{ADC10CLK}$ = 5 MHz, ADC10ON = 0, REFON = 1, REF2_5V = 0, REFOUT = 1, ADC10SR = 1	-40°C to 85°C	2.2 V, 3 V		0.5	0.7	mA
			105°C	2.2 V, 3 V			0.8	
C_I	Input capacitance	Only one terminal Ax selected at a time	I: -40°C to 85°C T: -40°C to 105°C				27	pF
R_I	Input MUX ON resistance	0 V ≤ V_{Ax} ≤ V_{CC}	I: -40°C to 85°C T: -40°C to 105°C	2.2 V, 3 V			2000	Ω

(1) The leakage current is defined in the leakage current table with Px.x/Ax parameter.
(2) The analog input voltage range must be within the selected reference voltage range V_{R+} to V_{R-} for valid conversion results.
(3) The internal reference supply current is not included in current consumption parameter I_{ADC10}.
(4) The internal reference current is supplied via terminal V_{CC}. Consumption is independent of the ADC10ON control bit, unless a conversion is active. The REFON bit enables the built-in reference to settle before starting an A/D conversion.

Copyright © 2005–2012, Texas Instruments Incorporated

10-Bit ADC, Built-In Voltage Reference (MSP430F20x2)

over recommended ranges of supply voltage and operating free-air temperature (unless otherwise noted)

PARAMETER		TEST CONDITIONS		V_{CC}	MIN	TYP	MAX	UNIT
$V_{CC,REF+}$	Positive built-in reference analog supply voltage range	$I_{VREF+} \le 1$ mA, REF2_5V = 0			2.2			V
		$I_{VREF+} \le 0.5$ mA, REF2_5V = 1			2.8			
		$I_{VREF+} \le 1$ mA, REF2_5V = 1			2.9			
V_{REF+}	Positive built-in reference voltage	$I_{VREF+} \le I_{VREF+}$max, REF2_5V = 0		2.2 V, 3 V	1.41	1.5	1.59	V
		$I_{VREF+} \le I_{VREF+}$max, REF2_5V = 1		3 V	2.35	2.5	2.65	
$I_{LD,VREF+}$	Maximum V_{REF+} load current			2.2 V			±0.5	mA
				3 V			±1	
	V_{REF+} load regulation	I_{VREF+} = 500 µA ± 100 µA, Analog input voltage $V_{Ax} \approx 0.75$ V, REF2_5V = 0		2.2 V, 3 V			±2	LSB
		I_{VREF+} = 500 µA ± 100 µA, Analog input voltage $V_{Ax} \approx 1.25$ V, REF2_5V = 1		3 V			±2	
	V_{REF+} load regulation response time	I_{VREF+} = 100 µA to 900 µA, $V_{Ax} \approx 0.5 \times V_{REF+}$, Error of conversion result ≤1 LSB	ADC10SR = 0	3 V			400	ns
			ADC10SR = 1				2000	
C_{VREF+}	Maximum capacitance at pin V_{REF+} (1)	$I_{VREF+} \le \pm 1$ mA, REFON = 1, REFOUT = 1		2.2 V, 3 V			100	pF
T_{CREF+}	Temperature coefficient	I_{VREF+} = constant with 0 mA ≤ I_{VREF+} ≤ 1 mA		2.2 V, 3 V			±100	ppm/°C
t_{REFON}	Settling time of internal reference voltage (2)	I_{VREF+} = 0.5 mA, REF2_5V = 0, REFON = 0 to 1		3.6 V			30	µs
$t_{REFBURST}$	Settling time of reference buffer (2)	I_{VREF+} = 0.5 mA, REF2_5V = 0, REFON = 1, REFBURST = 1	ADC10SR = 0	2.2 V			1	µs
			ADC10SR = 1				2.5	
		I_{VREF+} = 0.5 mA, REF2_5V = 1, REFON = 1, REFBURST = 1	ADC10SR = 0	3 V			2	
			ADC10SR = 1				4.5	

(1) The capacitance applied to the internal buffer operational amplifier, if switched to terminal P1.4/SMCLK/A4/VREF+/VeREF+/TCK (REFOUT = 1), must be limited; otherwise, the reference buffer may become unstable.
(2) The condition is that the error in a conversion started after t_{REFON} or t_{RefBuf} is less than ±0.5 LSB.

Copyright © 2005–2012, Texas Instruments Incorporated

10-Bit ADC, External Reference (MSP430F20x2)(1)

over recommended ranges of supply voltage and operating free-air temperature (unless otherwise noted)

PARAMETER		TEST CONDITIONS	V_{CC}	MIN	MAX	UNIT
V_{eREF+}	Positive external reference input voltage range(2)	$V_{eREF+} > V_{eREF-}$, SREF1 = 1, SREF0 = 0		1.4	V_{CC}	V
		$V_{eREF-} \le V_{eREF+} \le V_{CC}$ - 0.15 V, SREF1 = 1, SREF0 = 1(3)		1.4	3	
V_{eREF-}	Negative external reference input voltage range(4)	$V_{eREF+} > V_{eREF-}$		0	1.2	V
ΔV_{eREF}	Differential external reference input voltage range $\Delta V_{eREF} = V_{eREF+} - V_{eREF-}$	$V_{eREF+} > V_{eREF-}$(5)		1.4	V_{CC}	V
I_{VeREF+}	Static input current into V_{eREF+}	$0 V \le V_{eREF+} \le V_{CC}$, SREF1 = 1, SREF0 = 0	2.2 V, 3 V		±1	µA
		$0 V \le V_{eREF+} \le V_{CC}$ - 0.15 V ≤ 3 V, SREF1 = 1, SREF0 = 1(3)			0	
I_{VeREF-}	Static input current into V_{eREF-}	$0 V \le V_{eREF-} \le V_{CC}$	2.2 V, 3 V		±1	µA

(1) The external reference is used during conversion to charge and discharge the capacitance array. The input capacitance, C_I, is also the dynamic load for an external reference during conversion. The dynamic impedance of the reference supply should follow the recommendations on analog-source impedance to allow the charge to settle for 10-bit accuracy.
(2) The accuracy limits the minimum positive external reference voltage. Lower reference voltage levels may be applied with reduced accuracy requirements.
(3) Under this condition, the external reference is internally buffered. The reference buffer is active and requires the reference buffer supply current I_{REFB}. The current consumption can be limited to the sample and conversion period with REBURST = 1.
(4) The accuracy limits the maximum negative external reference voltage. Higher reference voltage levels may be applied with reduced accuracy requirements.
(5) The accuracy limits the minimum external differential reference voltage. Lower differential reference voltage levels may be applied with reduced accuracy requirements.

10-Bit ADC, Timing Parameters (MSP430F20x2)

over recommended ranges of supply voltage and operating free-air temperature (unless otherwise noted)

PARAMETER		TEST CONDITIONS		V_{CC}	MIN	TYP	MAX	UNIT
$f_{ADC10CLK}$	ADC10 input clock frequency	For specified performance of ADC10 linearity parameters	ADC10SR = 0	2.2 V, 3 V	0.45		6.3	MHz
			ADC10SR = 1		0.45		1.5	
$f_{ADC10OSC}$	ADC10 built-in oscillator frequency	ADC10DIVx = 0, ADC10SSELx = 0, $f_{ADC10CLK} = f_{ADC10OSC}$		2.2 V, 3 V	3.7		6.3	MHz
$t_{CONVERT}$	Conversion time	ADC10 built-in oscillator, ADC10SSELx = 0, $f_{ADC10CLK} = f_{ADC10OSC}$		2.2 V, 3 V	2.06		3.51	µs
		$f_{ADC10CLK}$ from ACLK, MCLK or SMCLK, ADC10SSELx ≠ 0				13 × ADC10DIVx × $1/f_{ADC10CLK}$		
$t_{ADC10ON}$	Turn on settling time of the ADC(1)						100	ns

(1) The condition is that the error in a conversion started after $t_{ADC10ON}$ is less than ±0.5 LSB. The reference and input signal are already settled.

10-Bit ADC, Linearity Parameters (MSP430F20x2)

over recommended ranges of supply voltage and operating free-air temperature (unless otherwise noted)

PARAMETER		TEST CONDITIONS	V_{CC}	MIN	TYP	MAX	UNIT
E_I	Integral linearity error		2.2 V, 3 V			±1	LSB
E_D	Differential linearity error		2.2 V, 3 V			±1	LSB
E_O	Offset error	Source impedance R_S < 100 Ω	2.2 V, 3 V			±1	LSB
E_G	Gain error		2.2 V, 3 V		±1.1	±2	LSB
E_T	Total unadjusted error		2.2 V, 3 V		±2	±5	LSB

10-Bit ADC, Temperature Sensor and Built-In V_{MID} (MSP430F20x2)(1)

over recommended ranges of supply voltage and operating free-air temperature (unless otherwise noted)

PARAMETER		TEST CONDITIONS	V_{CC}	MIN	TYP	MAX	UNIT
I_{SENSOR}	Temperature sensor supply current(1)	REFON = 0, INCHx = 0Ah, T_A = 25°C	2.2 V		40	120	µA
			3 V		60	160	
TC_{SENSOR}		ADC10ON = 1, INCHx = 0Ah(2)	2.2 V, 3 V	3.44	3.55	3.66	mV/°C
$V_{Offset,Sensor}$	Sensor offset voltage	ADC10ON = 1, INCHx = 0Ah(2)		-100		100	mV
V_{SENSOR}	Sensor output voltage(3)	Temperature sensor voltage at T_A = 105°C (T version only)	2.2 V, 3 V	1265	1365	1465	mV
		Temperature sensor voltage at T_A = 85°C		1195	1295	1395	
		Temperature sensor voltage at T_A = 25°C		985	1085	1185	
		Temperature sensor voltage at T_A = 0°C		895	995	1095	
$t_{SENSOR(sample)}$	Sample time required if channel 10 is selected(4)	ADC10ON = 1, INCHx = 0Ah, Error of conversion result ≤ 1 LSB	2.2 V, 3 V	30			µs
I_{VMID}	Current into divider at channel 11(4)	ADC10ON = 1, INCHx = 0Bh	2.2 V			N/A	µA
			3 V			N/A	
V_{MID}	V_{CC} divider at channel 11	ADC10ON = 1, INCHx = 0Bh, $V_{MID} \approx 0.5 \times V_{CC}$	2.2 V	1.06	1.1	1.14	V
			3 V	1.46	1.5	1.54	
$t_{VMID(sample)}$	Sample time required if channel 11 is selected(5)	ADC10ON = 1, INCHx = 0Bh, Error of conversion result ≤ 1 LSB	2.2 V	1400			ns
			3 V	1220			

(1) The sensor current I_{SENSOR} is consumed if (ADC10ON = 1 and REFON = 1), or (ADC10ON = 1 and INCH = 0Ah and sample signal is high).When REFON = 1, I_{SENSOR} is included in I_{REF+}.When REFON = 0, I_{SENSOR} applies during conversion of the temperature sensor input (INCH = 0Ah).
(2) The following formula can be used to calculate the temperature sensor output voltage:
$V_{Sensor,typ} = TC_{Sensor}$ (273 + T [°C]) + $V_{Offset,sensor}$ [mV] or
$V_{Sensor,typ} = TC_{Sensor}$ T [°C] + $V_{Sensor}(T_A$ = 0°C) [mV]
(3) Results based on characterization and/or production test, not TC_{Sensor} or $V_{Offset,sensor}$.
(4) No additional current is needed. The V_{MID} is used during sampling.
(5) The on time, $t_{VMID(on)}$, is included in the sampling time, $t_{VMID(sample)}$; no additional on time is needed.

Copyright © 2005–2012, Texas Instruments Incorporated

SD16_A, Power Supply and Recommended Operating Conditions (MSP430F20x3)

over recommended ranges of supply voltage and operating free-air temperature (unless otherwise noted)

PARAMETER		TEST CONDITIONS		T_A	V_{CC}	MIN	TYP	MAX	UNIT
AV_{CC}	Analog supply voltage range	$AV_{CC} = DV_{CC} = V_{CC}$, $AV_{SS} = DV_{SS} = V_{SS} = 0$ V				2.5		3.6	V
I_{SD16}	Analog supply current including internal reference	SD16LP = 0, f_{SD16} = 1 MHz, SD16OSR = 256	GAIN: 1,2	-40°C to 85°C	3 V		730	1050	µA
				105°C				1170	
			GAIN: 4,8,16	-40°C to 85°C			810	1150	
				105°C				1300	
			GAIN: 32	-40°C to 85°C			1160	1700	
				105°C				1850	
		SD16LP = 1, f_{SD16} = 0.5 MHz, SD16OSR = 256	GAIN: 1	-40°C to 85°C			720	1030	
				105°C				1160	
			GAIN: 32	-40°C to 85°C			810	1150	
				105°C				1300	
f_{SD16}	SD16 input clock frequency	SD16LP = 0 (Low power mode disabled)			3 V	0.03	1	1.1	MHz
		SD16LP = 1 (Low power mode enabled)				0.03	0.5		

SD16_A, Input Range (MSP430F20x3)

over recommended ranges of supply voltage and operating free-air temperature (unless otherwise noted)

PARAMETER		TEST CONDITIONS		V_{CC}	MIN	TYP	MAX	UNIT
$V_{ID,FSR}$	Differential full scale input voltage range(1)	Bipolar mode, SD16UNI = 0			$-(V_{REF}/2)/GAIN$		$+(V_{REF}/2)/GAIN$	mV
		Unipolar mode, SD16UNI = 1			0		$+(V_{REF}/2)/GAIN$	
V_{ID}	Differential input voltage range for specified performance(1)	SD16REFON = 1	SD16GAINx = 1			±500		mV
			SD16GAINx = 2			±250		
			SD16GAINx = 4			±125		
			SD16GAINx = 8			±62		
			SD16GAINx = 16			±31		
			SD16GAINx = 32			±15		
Z_I	Input impedance (one input pin to AV_{SS})	f_{SD16} = 1 MHz	SD16GAINx = 1	3 V		200		kΩ
			SD16GAINx = 32			75		
Z_{ID}	Differential input impedance (IN+ to IN-)	f_{SD16} = 1 MHz	SD16GAINx = 1	3 V	300	400		kΩ
			SD16GAINx = 32		100	150		
V_I	Absolute input voltage range				AV_{SS} - 0.1		AV_{CC}	V
V_{IC}	Common-mode input voltage range				AV_{SS} - 0.1		AV_{CC}	V

(1) The analog input range depends on the reference voltage applied to V_{REF}. If V_{REF} is sourced externally, the full-scale range is defined by $V_{FSR+} = +(V_{REF}/2)/GAIN$ and $V_{FSR-} = -(V_{REF}/2)/GAIN$. The analog input range should not exceed 80% of V_{FSR+} or V_{FSR-}.

Copyright © 2005–2012, Texas Instruments Incorporated

SD16_A, SINAD Performance (f_{SD16} = 1 MHz, SD16OSRx = 1024, SD16REFON = 1) (MSP430F20x3)

over recommended ranges of supply voltage and operating free-air temperature (unless otherwise noted)

PARAMETER		TEST CONDITIONS	V_{CC}	PW, N		RSA		UNIT
				MIN	TYP	MIN	TYP	
$SINAD_{1024}$	Signal-to-noise + distortion ratio (OSR = 1024)	SD16GAINx = 1, Signal amplitude: V_{IN} = 500 mV, Signal frequency: f_{IN} = 100 Hz	3 V	84	85	86	87	dB
		SD16GAINx = 2, Signal amplitude: V_{IN} = 250 mV, Signal frequency: f_{IN} = 100 Hz		82	83	82	83	
		SD16GAINx = 4, Signal amplitude: V_{IN} = 125 mV, Signal frequency: f_{IN} = 100 Hz		78	79	78	79	
		SD16GAINx = 8, Signal amplitude: V_{IN} = 62 mV, Signal frequency: f_{IN} = 100 Hz		73	74	73	74	
		SD16GAINx = 16, Signal amplitude: V_{IN} = 31 mV, Signal frequency: f_{IN} = 100 Hz		68	69	68	69	
		SD16GAINx = 32, Signal amplitude: V_{IN} = 15 mV, Signal frequency: f_{IN} = 100 Hz		62	63	62	63	

SD16_A, SINAD Performance (f_{SD16} = 1 MHz, SD16OSRx = 256, SD16REFON = 1) (MSP430F20x3)

over recommended ranges of supply voltage and operating free-air temperature (unless otherwise noted)

PARAMETER		TEST CONDITIONS	V_{CC}	PW, N		RSA		UNIT
				MIN	TYP	MIN	TYP	
$SINAD_{256}$	Signal-to-noise + distortion ratio (OSR = 256)	SD16GAINx = 1, Signal amplitude: V_{IN} = 500 mV, Signal frequency: f_{IN} = 100 Hz	3 V	80	81	82	83	dB
		SD16GAINx = 2, Signal amplitude: V_{IN} = 250 mV, Signal frequency: f_{IN} = 100 Hz		74	75	76	77	
		SD16GAINx = 4, Signal amplitude: V_{IN} = 125 mV, Signal frequency: f_{IN} = 100 Hz		69	70	71	72	
		SD16GAINx = 8, Signal amplitude: V_{IN} = 62 mV, Signal frequency: f_{IN} = 100 Hz		63	64	67	68	
		SD16GAINx = 16, Signal amplitude: V_{IN} = 31 mV, Signal frequency: f_{IN} = 100 Hz		58	59	63	64	
		SD16GAINx = 32, Signal amplitude: V_{IN} = 15 mV, Signal frequency: f_{IN} = 100 Hz		52	53	57	58	

Copyright © 2005–2012, Texas Instruments Incorporated

Typical Characteristics, SD16_A SINAD Performance Over OSR (MSP430F20x3)

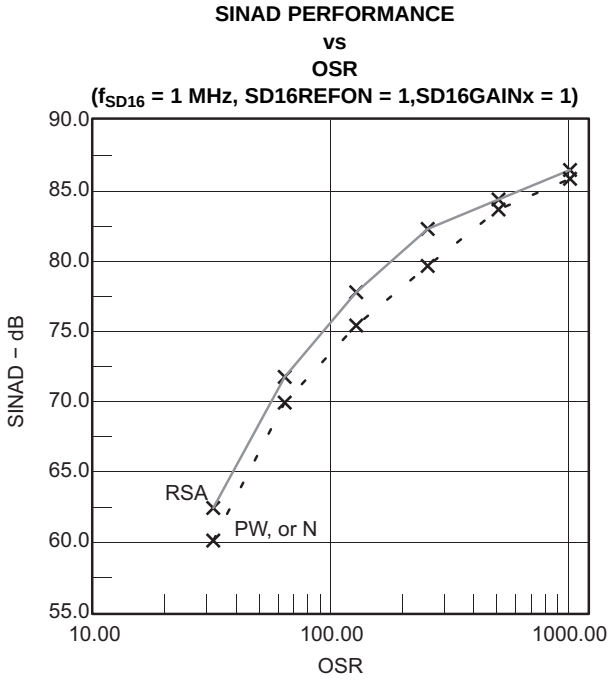

Figure 23.

SD16_A, Performance (f_{SD16} = 1 MHz, SD16OSRx = 256, SD16REFON = 1) (MSP430F20x3)

over recommended ranges of supply voltage and operating free-air temperature (unless otherwise noted)

PARAMETER		TEST CONDITIONS	V_{CC}	MIN	TYP	MAX	UNIT
G	Nominal gain	SD16GAINx = 1	3 V	0.97	1.00	1.02	
		SD16GAINx = 2		1.90	1.96	2.02	
		SD16GAINx = 4		3.76	3.86	3.96	
		SD16GAINx = 8		7.36	7.62	7.84	
		SD16GAINx = 16		14.56	15.04	15.52	
		SD16GAINx = 32		27.20	28.35	29.76	
ΔG/ΔT	Gain temperature drift	SD16GAINx = 1 (1)	3 V		15		ppm/°C
E_{OS}	Offset error	SD16GAINx = 1	3 V			±0.2	%FSR
		SD16GAINx = 32				±1.5	
$\Delta E_{OS}/\Delta T$	Offset error temperature coefficient	SD16GAINx = 1	3 V		±4	±20	ppm FSR/°C
		SD16GAINx = 32			±20	±100	
CMRR	Common-mode rejection ratio	SD16GAINx = 1, Common-mode input signal: V_{ID} = 500 mV, f_{IN} = 50 Hz, 100 Hz	3 V		>90		dB
		SD16GAINx = 32, Common-mode input signal: V_{ID} = 16 mV, f_{IN} = 50 Hz, 100 Hz			>75		
DC PSR	DC power supply rejection	SD16GAINx = 1, V_{IN} = 500 mV, V_{CC} = 2.5 V to 3.6 V (2)	2.5 V to 3.6 V		0.35		%/V
AC PSRR	AC power supply rejection ratio	SD16GAINx = 1, V_{CC} = 3 V ± 100 mV, f_{IN} = 50 Hz	3 V		>80		dB

(1) Calculated using the box method: (MAX(-40°C to 85°C) - MIN(-40°C to 85°C)) / MIN(-40°C to 85°C) / (85°C - (-40°C))
(2) Calculated using the ADC output code and the box method:
(MAX-code(2.5 V to 3.6 V) - MIN-code(2.5 V to 3.6 V)) / MIN-code(2.5 V to 3.6 V) / (3.6 V - 2.5 V)

Copyright © 2005–2012, Texas Instruments Incorporated

SD16_A, Built-In Voltage Reference (MSP430F20x3)

over recommended ranges of supply voltage and operating free-air temperature (unless otherwise noted)

PARAMETER		TEST CONDITIONS	T_A	V_{CC}	MIN	TYP	MAX	UNIT
V_{REF}	Internal reference voltage	SD16REFON = 1, SD16VMIDON = 0		3 V	1.14	1.20	1.26	V
I_{REF}	Reference supply current	SD16REFON = 1, SD16VMIDON = 0	-40°C to 85°C	3 V		190	280	µA
			105°C	3 V			295	
TC	Temperature coefficient	SD16REFON = 1, SD16VMIDON = 0		3 V		18	50	ppm/°C
C_{REF}	V_{REF} load capacitance	SD16REFON = 1, SD16VMIDON = 0 (1)				100		nF
I_{LOAD}	$V_{REF(I)}$ maximum load current	SD16REFON = 1, SD16VMIDON = 0		3 V			±200	nA
t_{ON}	Turn-on time	SD16REFON = 0 → 1, SD16VMIDON = 0, C_{REF} = 100 nF		3 V		5		ms
DC PSR	DC power supply rejection $\Delta V_{REF}/\Delta V_{CC}$	SD16REFON = 1, SD16VMIDON = 0, V_{CC} = 2.5 V to 3.6 V		2.5 V to 3.6 V		100		µV/V

(1) There is no capacitance required on V_{REF}. However, a capacitance of at least 100 nF is recommended to reduce any reference voltage noise.

SD16_A, Reference Output Buffer (MSP430F20x3)

over recommended ranges of supply voltage and operating free-air temperature (unless otherwise noted)

PARAMETER		TEST CONDITIONS	T_A	V_{CC}	MIN	TYP	MAX	UNIT
$V_{REF,BUF}$	Reference buffer output voltage	SD16REFON = 1, SD16VMIDON = 1		3 V		1.2		V
$I_{REF,BUF}$	Reference supply + reference output buffer quiescent current	SD16REFON = 1, SD16VMIDON = 1	-40°C to 85°C	3 V		385	600	µA
			105°C				660	
$C_{REF(O)}$	Required load capacitance on V_{REF}	SD16REFON = 1, SD16VMIDON = 1			470			nF
$I_{LOAD,Max}$	Maximum load current on V_{REF}	SD16REFON = 1, SD16VMIDON = 1		3 V			±1	mA
	Maximum voltage variation vs load current	$\|I_{LOAD}\|$ = 0 to 1 mA		3 V	-15		+15	mV
t_{ON}	Turn on time	SD16REFON = 0 → 1, SD16VMIDON = 1, C_{REF} = 470 nF		3 V		100		µs

SD16_A, External Reference Input (MSP430F20x3)

over recommended ranges of supply voltage and operating free-air temperature (unless otherwise noted)

PARAMETER		TEST CONDITIONS	V_{CC}	MIN	TYP	MAX	UNIT
$V_{REF(I)}$	Input voltage range	SD16REFON = 0	3 V	1	1.25	1.5	V
$I_{REF(I)}$	Input current	SD16REFON = 0	3 V			50	nA

Copyright © 2005–2012, Texas Instruments Incorporated

SD16_A, Temperature Sensor(1) (MSP430F20x3)

over recommended ranges of supply voltage and operating free-air temperature (unless otherwise noted)

PARAMETER		TEST CONDITIONS	V_{CC}	MIN	TYP	MAX	UNIT
TC_{Sensor}	Sensor temperature coefficient			1.18	1.32	1.46	mV/°C
$V_{Offset,Sensor}$	Sensor offset voltage			-100		100	mV
V_{Sensor}	Sensor output voltage(2)	Temperature sensor voltage at T_A = 85°C	3 V	435	475	515	mV
		Temperature sensor voltage at T_A = 25°C		355	395	435	
		Temperature sensor voltage at T_A = 0°C		320	360	400	

(1) Values are not based on calculations using TC_{Sensor} or $V_{Offset,sensor}$ but on measurements.
(2) The following formula can be used to calculate the temperature sensor output voltage:
$V_{Sensor,typ} = TC_{Sensor}$ (273 + T [°C]) + $V_{Offset,sensor}$ [mV] or
$V_{Sensor,typ} = TC_{Sensor}$ T [°C] + $V_{Sensor}(T_A = 0°C)$ [mV]

Flash Memory

over recommended ranges of supply voltage and operating free-air temperature (unless otherwise noted)

PARAMETER		TEST CONDITIONS	V_{CC}	MIN	TYP	MAX	UNIT
$V_{CC(PGM/ERASE)}$	Program and erase supply voltage			2.2		3.6	V
f_{FTG}	Flash timing generator frequency			257		476	kHz
I_{PGM}	Supply current from V_{CC} during program		2.2 V/3.6 V		1	5	mA
I_{ERASE}	Supply current from V_{CC} during erase		2.2 V/3.6 V		1	7	mA
t_{CPT}	Cumulative program time(1)		2.2 V/3.6 V			10	ms
$t_{CMErase}$	Cumulative mass erase time		2.2 V/3.6 V	20			ms
	Program/erase endurance			10^4	10^5		cycles
$t_{Retention}$	Data retention duration	T_J = 25°C		100			years
t_{Word}	Word or byte program time	(2)			30		t_{FTG}
$t_{Block, 0}$	Block program time for first byte or word	(2)			25		t_{FTG}
$t_{Block, 1-63}$	Block program time for each additional byte or word	(2)			18		t_{FTG}
$t_{Block, End}$	Block program end-sequence wait time	(2)			6		t_{FTG}
$t_{Mass\ Erase}$	Mass erase time	(2)			10593		t_{FTG}
$t_{Seg\ Erase}$	Segment erase time	(2)			4819		t_{FTG}

(1) The cumulative program time must not be exceeded when writing to a 64-byte flash block. This parameter applies to all programming methods: individual word/byte write and block write modes.
(2) These values are hardwired into the Flash Controller's state machine ($t_{FTG} = 1/f_{FTG}$).

RAM

over recommended ranges of supply voltage and operating free-air temperature (unless otherwise noted)

PARAMETER		TEST CONDITIONS	MIN	MAX	UNIT
$V_{(RAMh)}$	RAM retention supply voltage (1)	CPU halted	1.6		V

(1) This parameter defines the minimum supply voltage V_{CC} when the data in RAM remains unchanged. No program execution should happen during this supply voltage condition.

Copyright © 2005–2012, Texas Instruments Incorporated

JTAG and Spy-Bi-Wire Interface

over recommended ranges of supply voltage and operating free-air temperature (unless otherwise noted)

PARAMETER		V_{CC}	MIN	TYP	MAX	UNIT
f_{SBW}	Spy-Bi-Wire input frequency	2.2 V, 3 V	0		20	MHz
$t_{SBW,Low}$	Spy-Bi-Wire low clock pulse length	2.2 V, 3 V	0.025		15	µs
$t_{SBW,En}$	Spy-Bi-Wire enable time (TEST high to acceptance of first clock edge(1))	2.2 V, 3 V			1	µs
$t_{SBW,Ret}$	Spy-Bi-Wire return to normal operation time	2.2 V, 3 V	15		100	µs
f_{TCK}	TCK input frequency(2)	2.2 V	0		5	MHz
		3 V	0		10	MHz
$R_{Internal}$	Internal pulldown resistance on TEST	2.2 V, 3 V	25	60	90	kΩ

(1) Tools accessing the Spy-Bi-Wire interface need to wait for the maximum $t_{SBW,En}$ time after pulling the TEST/SBWCLK pin high before applying the first SBWCLK clock edge.
(2) f_{TCK} may be restricted to meet the timing requirements of the module selected.

JTAG Fuse(1)

over recommended ranges of supply voltage and operating free-air temperature (unless otherwise noted)

PARAMETER		TEST CONDITIONS	MIN	MAX	UNIT
$V_{CC(FB)}$	Supply voltage during fuse-blow condition	T_A = 25°C	2.5		V
V_{FB}	Voltage level on TEST for fuse blow		6	7	V
I_{FB}	Supply current into TEST during fuse blow			100	mA
t_{FB}	Time to blow fuse			1	ms

(1) Once the fuse is blown, no further access to the JTAG/Test, Spy-Bi-Wire, and emulation feature is possible, and JTAG is switched to bypass mode.

Copyright © 2005–2012, Texas Instruments Incorporated

APPLICATION INFORMATION, MSP430F20X1

Port P1 (P1.0 to P1.3) Pin Schematics, MSP430F20x1

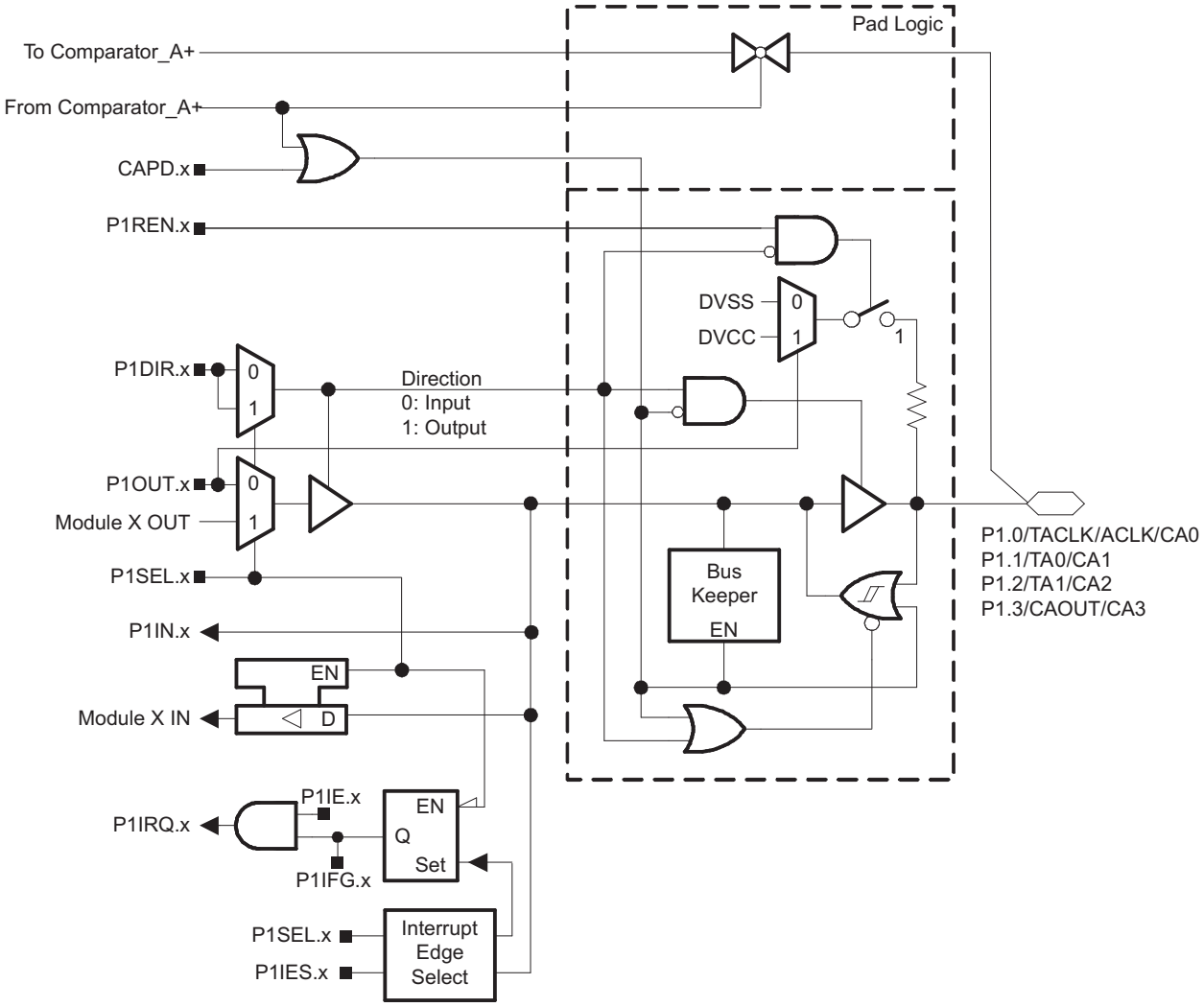

Table 16. Control Signal "From Comparator_A+"

PIN NAME	FUNCTION	SIGNAL "From Comparator_A+" = 1 (1)					
		P2CA4	P2CA0		P2CA3	P2CA2	P2CA1
P1.0/TACLK/ACLK/CA0	CA0	0	1	OR	N/A	N/A	N/A
P1.1/TA0/CA1	CA1	1	0		0	0	1
P1.2/TA1/CA2	CA2	1	1		0	1	0
P1.3/CAOUT/CA3	CA3	N/A	N/A		0	1	1

(1) N/A = Not available or not applicable

Table 17. Port P1 (P1.0 to P1.3) Pin Functions, MSP430F20x1

PIN NAME (P1.x)	x	FUNCTION	CONTROL BITS / SIGNALS(1)		
			P1DIR.x	P1SEL.x	CAPD.x
P1.0/TACLK/ACLK/CA0	0	P1.0(2) input/output	0/1	0	0
		Timer_A2.TACLK/INCLK	0	1	0
		ACLK	1	1	0
		CA0(3)	X	X	1
P1.1/TA0/CA1	1	P1.1(2) input/output	0/1	0	0
		Timer_A2.CCI0A	0	1	0
		Timer_A2.TA0	1	1	0
		CA1(3)	X	X	1
P1.2/TA1/CA2	2	P1.2(2) input/output	0/1	0	0
		Timer_A2.CCI1A	0	1	0
		Timer_A2.TA1	1	1	0
		CA2(3)	X	X	1
P1.3/CAOUT/CA3	3	P1.3(2) input/output	0/1	0	0
		N/A	0	1	0
		CAOUT	1	1	0
		CA3(3)	X	X	1

(1) X = Don't care
(2) Default after reset (PUC/POR)
(3) Setting the CAPD.x bit disables the output driver and the input Schmitt trigger to prevent parasitic cross currents when applying analog signals. Selecting the CAx input pin to the comparator multiplexer with the P2CAx bits automatically disables the input buffer for that pin, regardless of the state of the associated CAPD.x bit.

Copyright © 2005–2012, Texas Instruments Incorporated

Port P1 (P1.4 to P1.6) Pin Schematics, MSP430F20x1

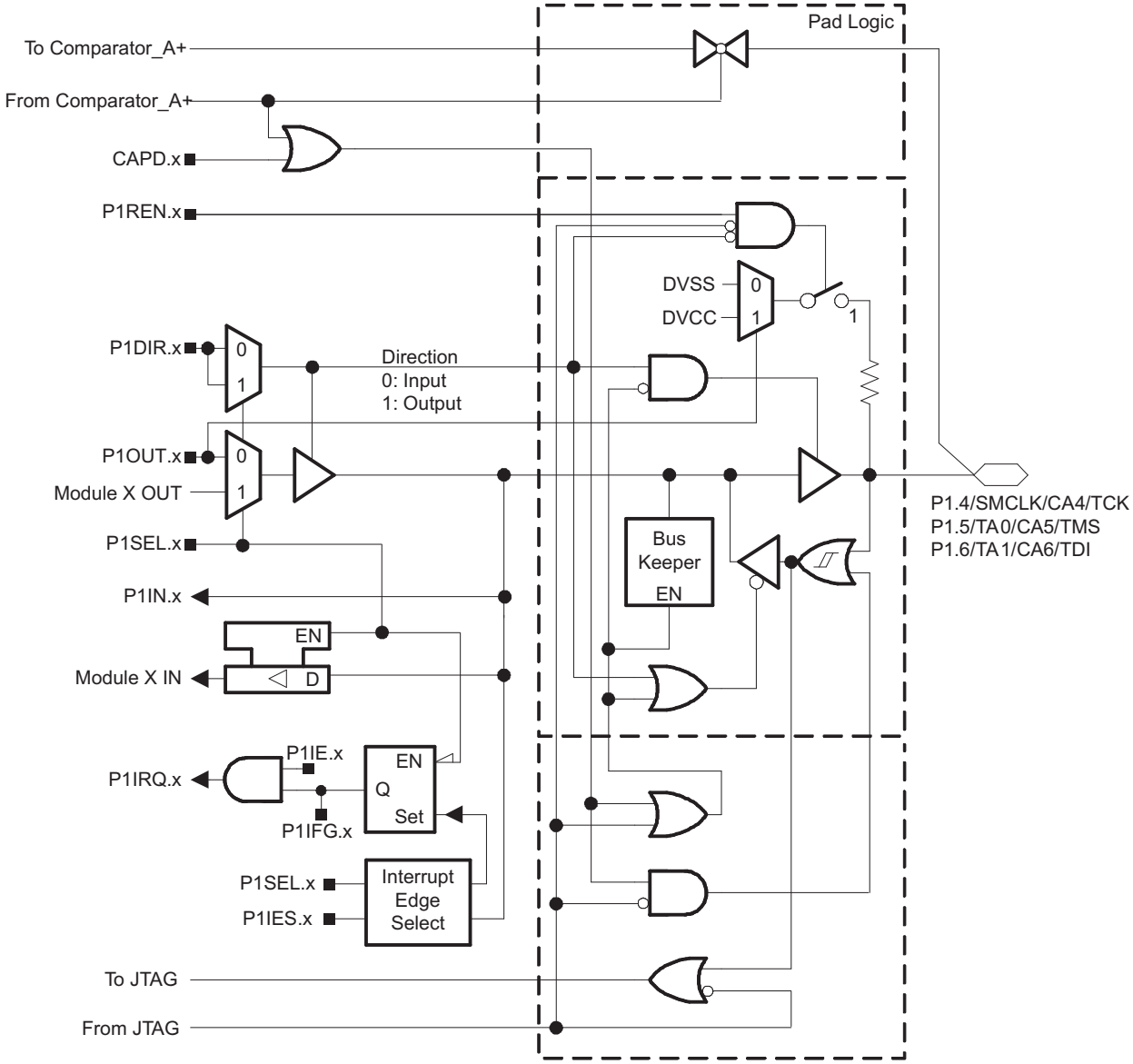

Table 18. Control Signal "From Comparator_A+"

PIN NAME	FUNCTION	SIGNAL "From Comparator_A+" = 1		
		P2CA3	P2CA2	P2CA1
P1.4/SMCLK/CA4/TCK	CA4	1	0	0
P1.5/TA0/CA5/TMS	CA5	1	0	1
P1.6/TA1/CA6/TDI	CA6	1	1	0

Port P1 (P1.7) Pin Schematics, MSP430F20x1

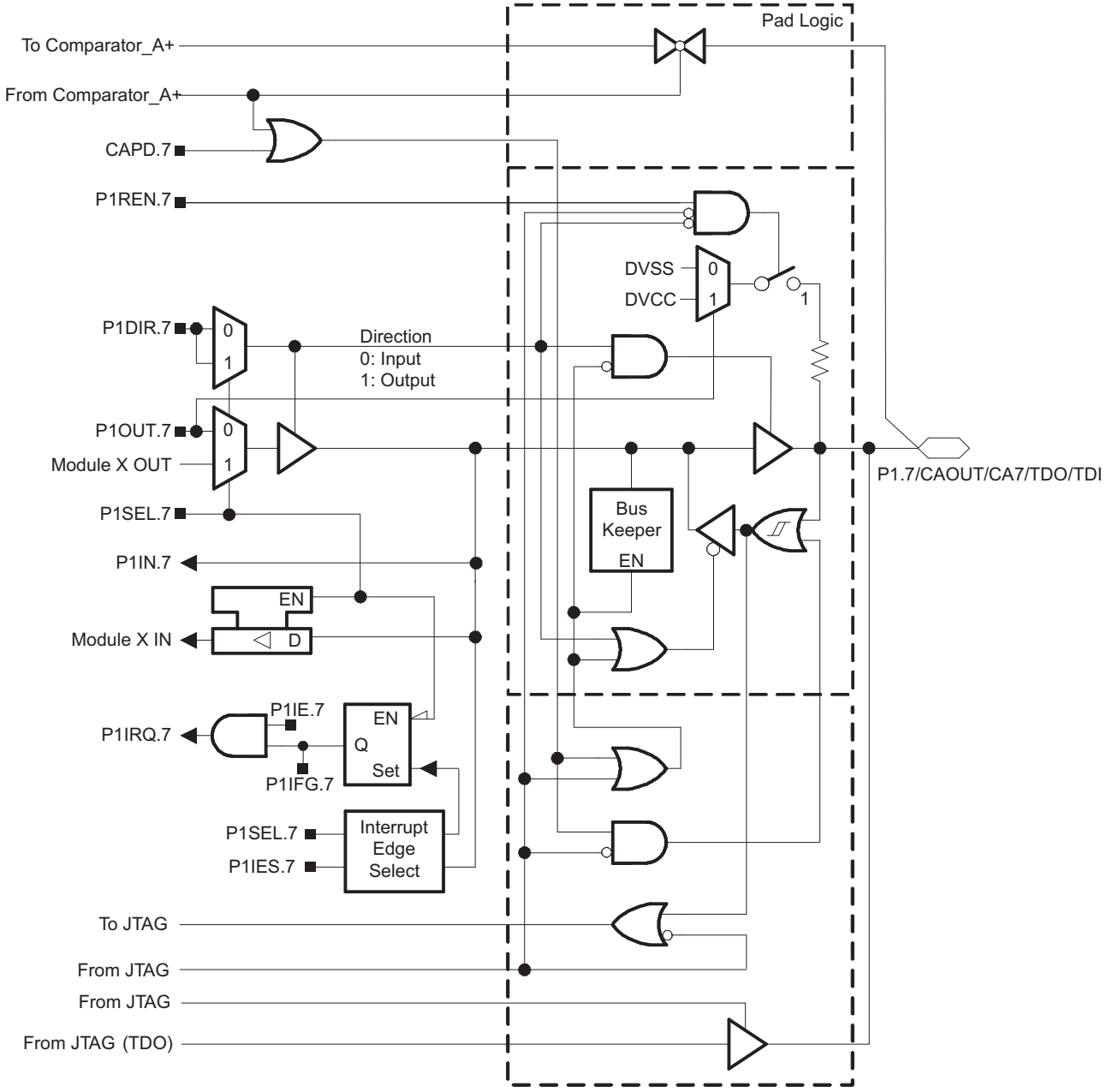

Table 19. Control Signal "From Comparator_A+"

PIN NAME	FUNCTION	SIGNAL "From Comparator_A+" = 1		
		P2CA3	P2CA2	P2CA1
P1.7/CAOUT/CA7/TDO/TDI	CA7	1	1	1

Copyright © 2005–2012, Texas Instruments Incorporated

Table 20. Port P1 (P1.4 to P1.7) Pin Functions, MSP430F20x1

PIN NAME (P1.x)	x	FUNCTION(1)	CONTROL BITS / SIGNALS(2)			
			P1DIR.x	P1SEL.x	CAPD.x	JTAG Mode
P1.4/SMCLK/CA4/TCK	4	P1.4(3) input/output	0/1	0	0	0
		N/A	0	1	0	0
		SMCLK	1	1	0	0
		CA4(4)	X	X	1	0
		TCK(5)	X	X	X	1
P1.5/TA0/CA5/TMS	5	P1.5(3) input/output	0/1	0	0	0
		N/A	0	1	0	0
		Timer_A2.TA0	1	1	0	0
		CA5(4)	X	X	1	0
		TMS(5)	X	X	X	1
P1.6/TA1/CA6/TDI	6	P1.6(3) input/output	0/1	0	0	0
		N/A	0	1	0	0
		Timer_A2.TA1	1	1	0	0
		CA6(4)	X	X	1	0
		TDI(5)	X	X	X	1
P1.7/CAOUT/CA7/TDO/TDI	7	P1.7(3) input/output	0/1	0	0	0
		N/A	0	1	0	0
		CAOUT	1	1	0	0
		CA7(4)	X	X	1	0
		TDO/TDI(5)(6)	X	X	X	1

(1) N/A = Not available or not applicable
(2) X = Don't care
(3) Default after reset (PUC/POR)
(4) Setting the CAPD.x bit disables the output driver and the input Schmitt trigger to prevent parasitic cross currents when applying analog signals. Selecting the CAx input pin to the comparator multiplexer with the P2CAx bits automatically disables the input buffer for that pin, regardless of the state of the associated CAPD.x bit.
(5) In JTAG mode the internal pullup/down resistors are disabled.
(6) Function controlled by JTAG

Copyright © 2005–2012, Texas Instruments Incorporated

Port P2 (P2.6) Pin Schematics, MSP430F20x1

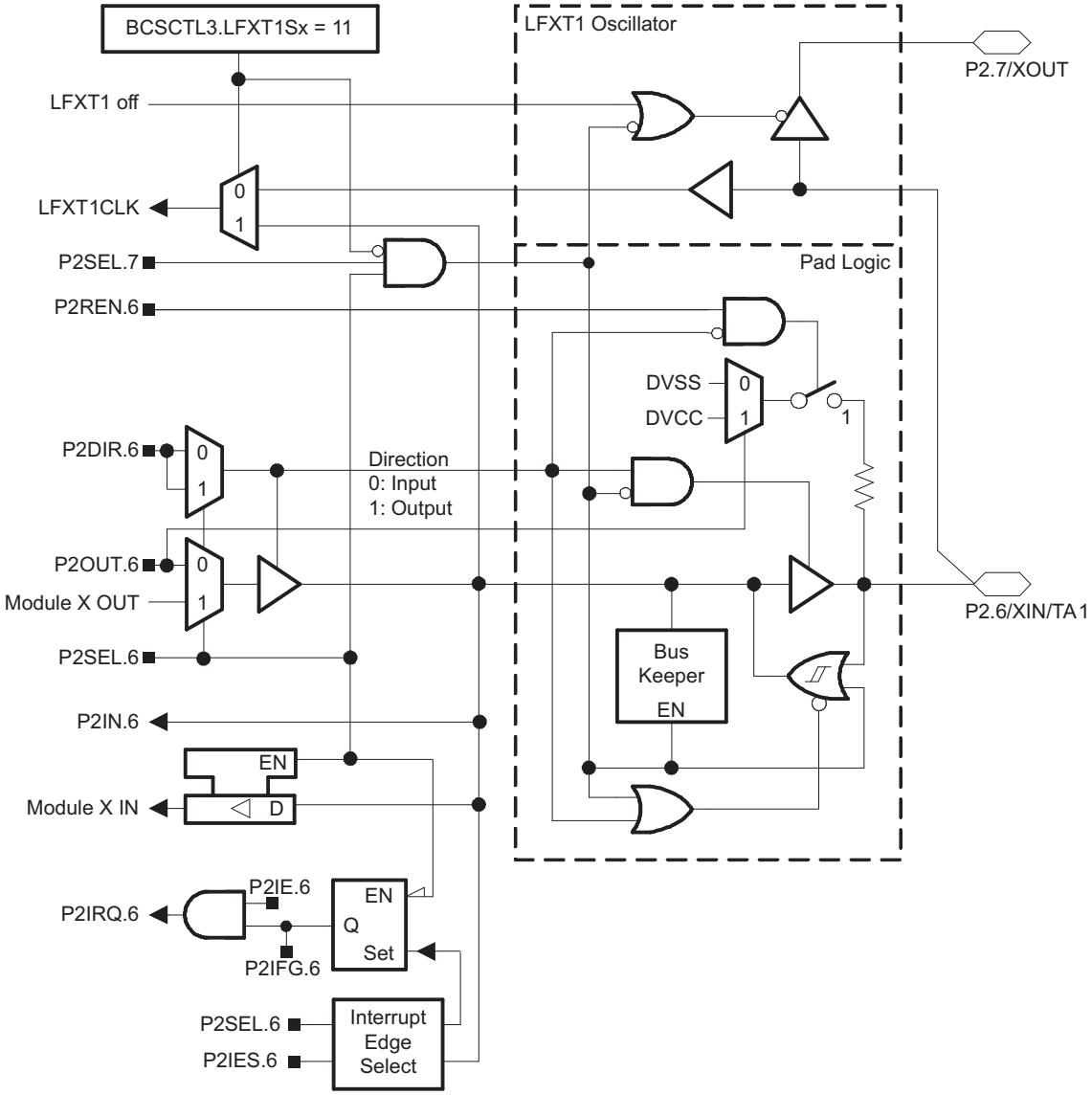

Table 21. Port P2 (P2.6) Pin Functions, MSP430F20x1

PIN NAME (P2.x)	x	FUNCTION	CONTROL BITS / SIGNALS	
			P2DIR.x	P2SEL.x
P2.6/XIN/TA1	6	P2.6 input/output	0/1	0
		XIN(1)(2)	0	1
		Timer_A2.TA1	1	1

(1) Default after reset (PUC/POR)
(2) XIN is used as digital clock input if the bits LFXT1Sx in register BCSCTL3 are set to 11.

Copyright © 2005–2012, Texas Instruments Incorporated

Port P2 (P2.7) Pin Schematics, MSP430F20x1

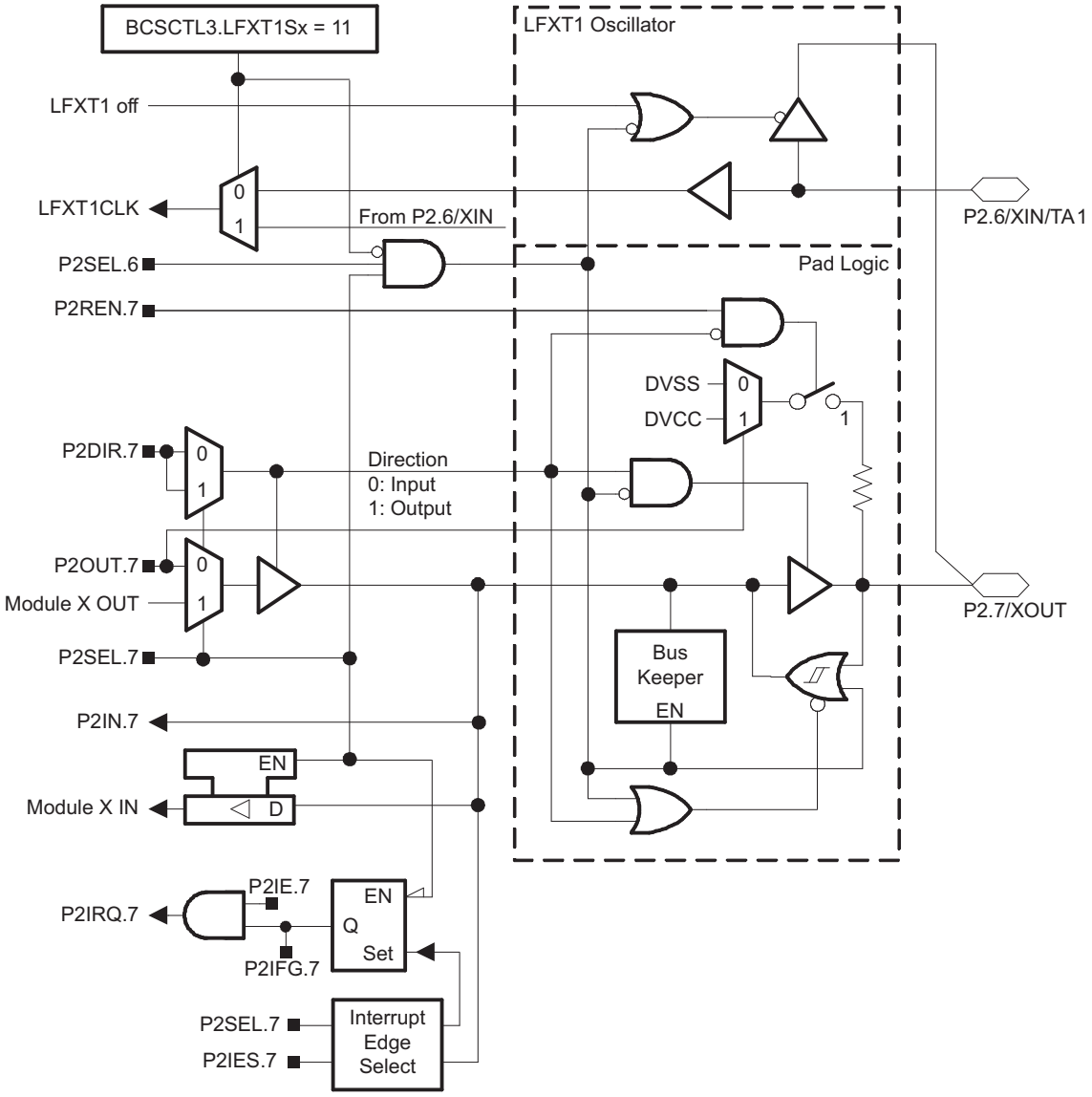

Table 22. Port P2 (P2.7) Pin Functions, MSP430F20x1

PIN NAME (P2.x)	x	FUNCTION	CONTROL BITS / SIGNALS	
			P2DIR.x	P2SEL.x
P2.7/XOUT	7	P2.7 input/output	0/1	0
		DVSS	0	1
		XOUT(1)(2)	1	1

(1) Default after reset (PUC/POR)
(2) If the pin P2.7/XOUT is used as an input a current can flow until P2SEL.7 is cleared due to the oscillator output driver connection to this pin after reset.

Copyright © 2005–2012, Texas Instruments Incorporated

APPLICATION INFORMATION, MSP430F20X2

Port P1 (P1.0 to P1.2) Pin Schematics, MSP430F20x2

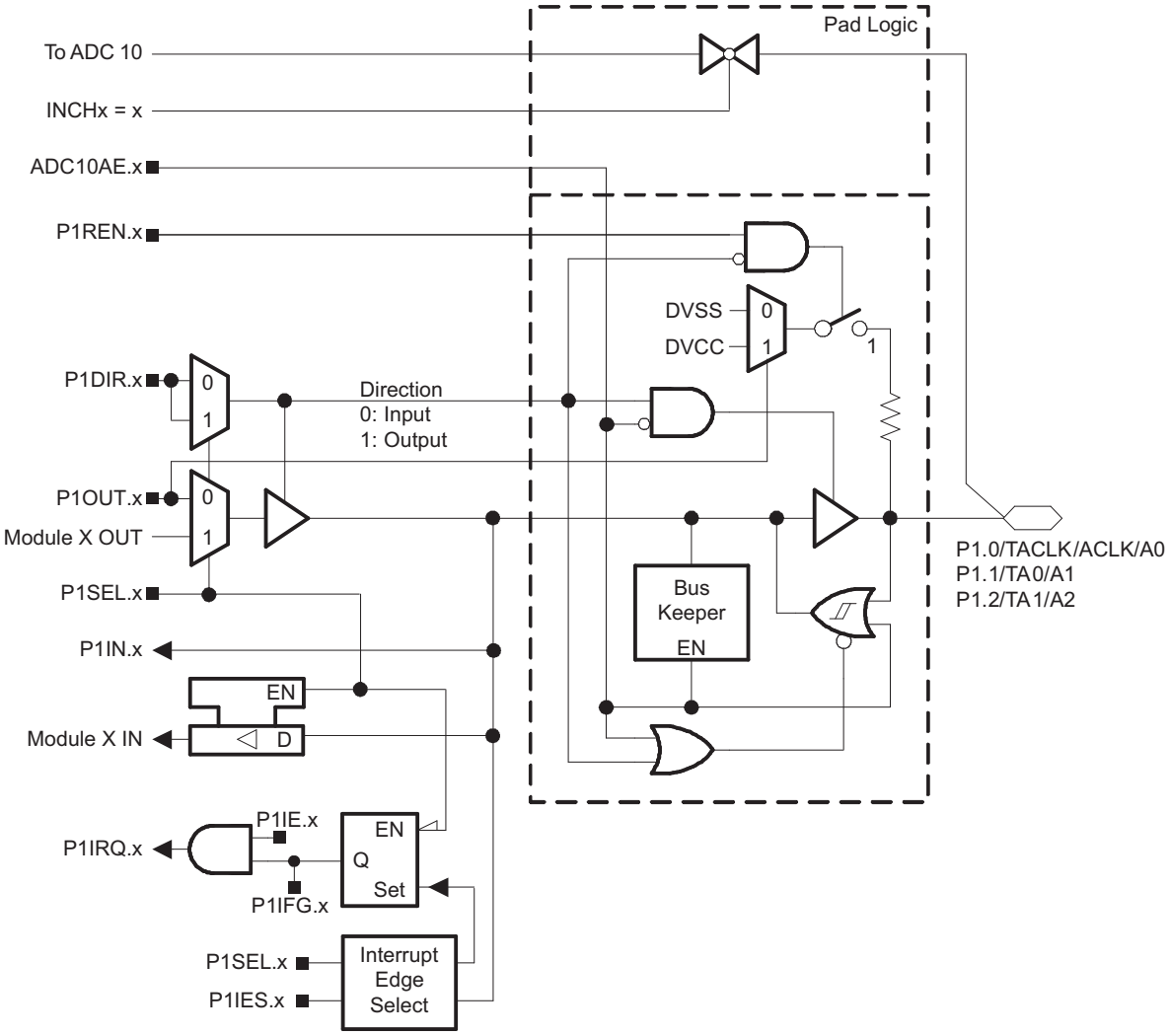

Copyright © 2005–2012, Texas Instruments Incorporated

Table 23. Port P1 (P1.0 to P1.2) Pin Functions, MSP430F20x2

PIN NAME (P1.x)	x	FUNCTION	CONTROL BITS / SIGNALS[1][2]			
			P1DIR.x	P1SEL.x	ADC10AE.x	INCHx
P1.0/TACLK/ACLK/A0	0	P1.0[3] input/output	0/1	0	0	N/A
		Timer_A2.TACLK/INCLK	0	1	0	N/A
		ACLK	1	1	0	N/A
		A0[4]	X	X	1	0
P1.1/TA0/A1	1	P1.1[3] input/output	0/1	0	0	N/A
		Timer_A2.CCI0A	0	1	0	N/A
		Timer_A2.TA0	1	1	0	N/A
		A1[4]	X	X	1	1
P1.2/TA1/A2	2	P1.2[3] input/output	0/1	0	0	N/A
		Timer_A2.CCI1A	0	1	0	N/A
		Timer_A2.TA1	1	1	0	N/A
		A2[4]	X	X	1	2

(1) X = Don't care
(2) N/A = Not available or not applicable
(3) Default after reset (PUC/POR)
(4) Setting the ADC10AE.x bit disables the output driver and the input Schmitt trigger to prevent parasitic cross currents when applying analog signals.

Copyright © 2005–2012, Texas Instruments Incorporated

Port P1 (P1.3) Pin Schematics, MSP430F20x2

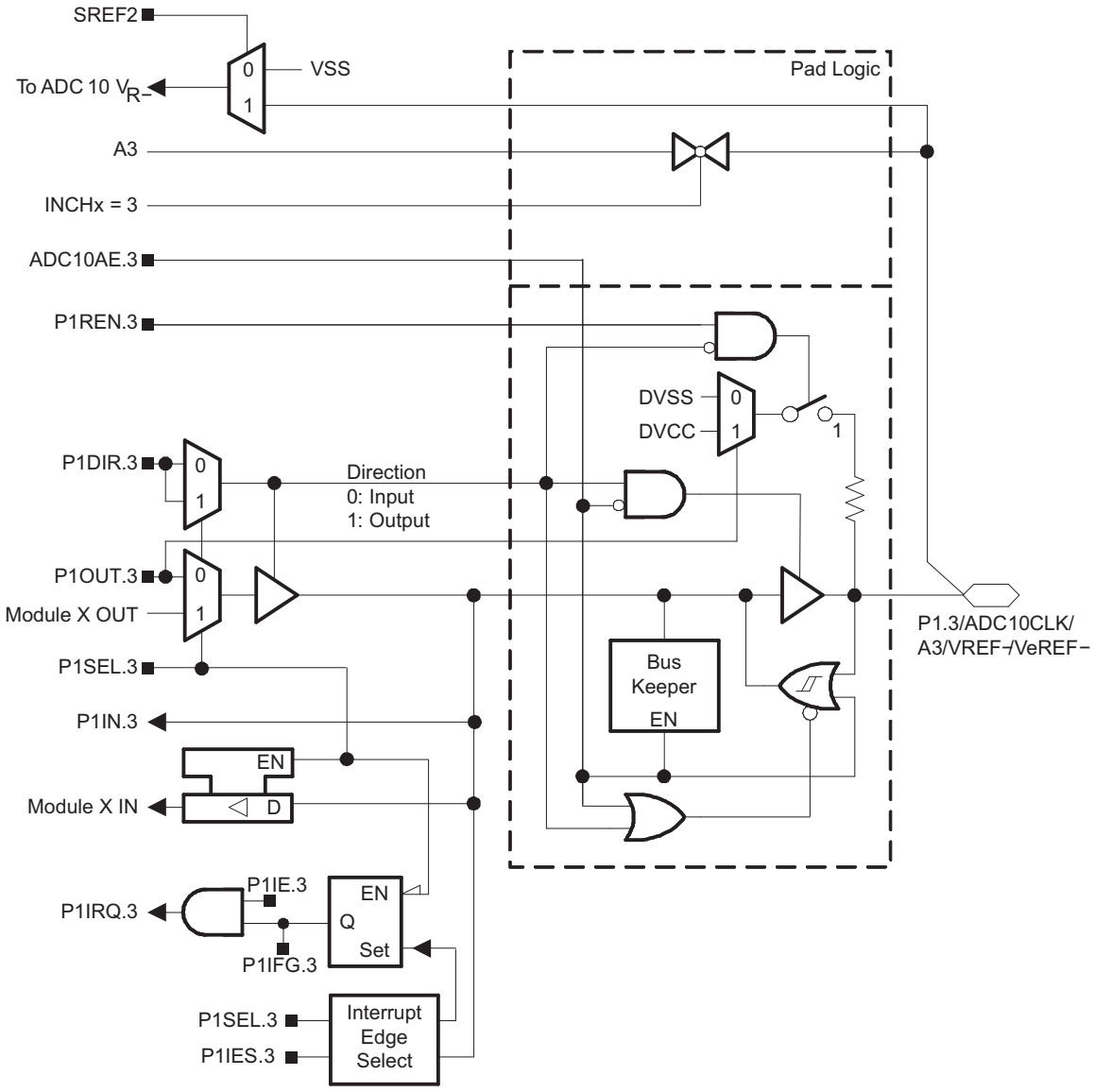

Table 24. Port P1 (P1.3) Pin Functions, MSP430F20x2

PIN NAME (P1.x)	x	FUNCTION	CONTROL BITS / SIGNALS[1][2]			
			P1DIR.x	P1SEL.x	ADC10AE.x	INCHx
P1.3/ADC10CLK/A3/ VREF-/VeREF-	3	P1.3[3] input/output	0/1	0	0	N/A
		N/A	0	1	0	N/A
		ADC10CLK	1	1	0	N/A
		A3[4]	X	X	1	3
		VREF-/VeREF-[4][5]	X	X	1	N/A

(1) X = Don't care
(2) N/A = Not available or not applicable
(3) Default after reset (PUC/POR)
(4) Setting the ADC10AE.x bit disables the output driver and the input Schmitt trigger to prevent parasitic cross currents when applying analog signals.
(5) An applied voltage is used as negative reference if bit SREF3 in register ADC10CTL0 is set.

Copyright © 2005–2012, Texas Instruments Incorporated

Port P1 (P1.4) Pin Schematic, MSP430F20x2

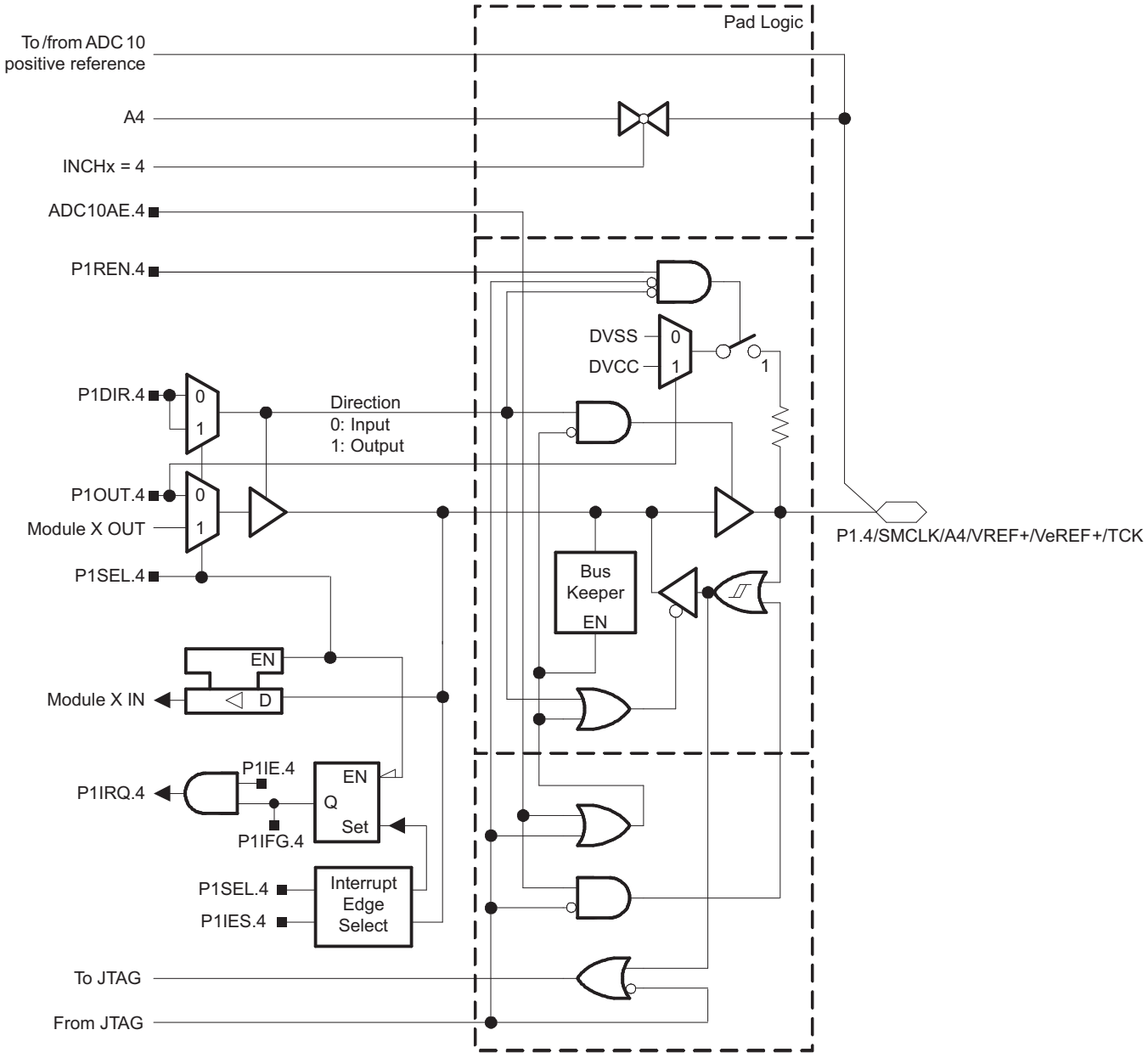

Port P1 (P1.5) Pin Schematics, MSP430F20x2

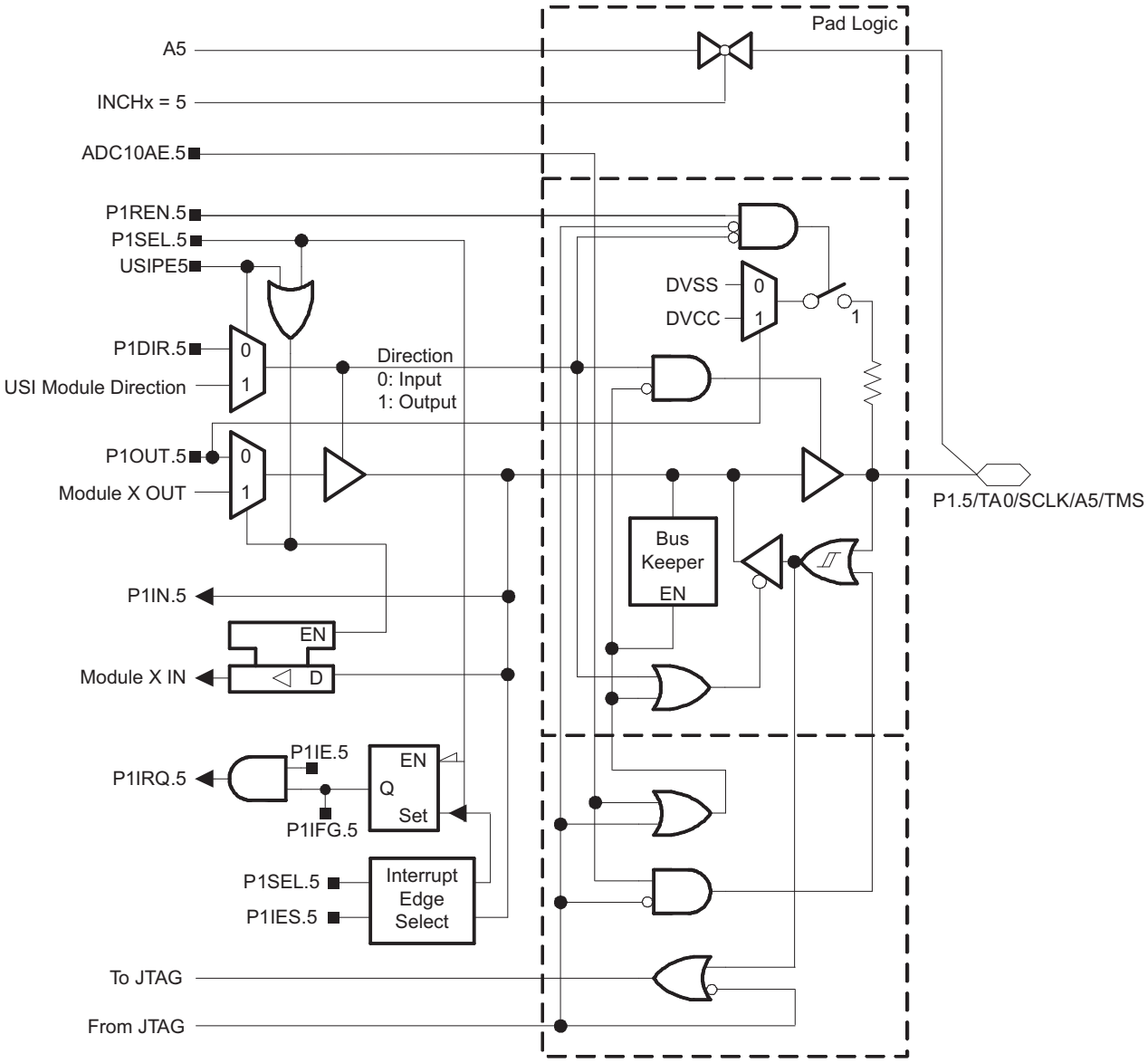

Copyright © 2005–2012, Texas Instruments Incorporated

Port P1 (P1.6) Pin Schematics, MSP430F20x2

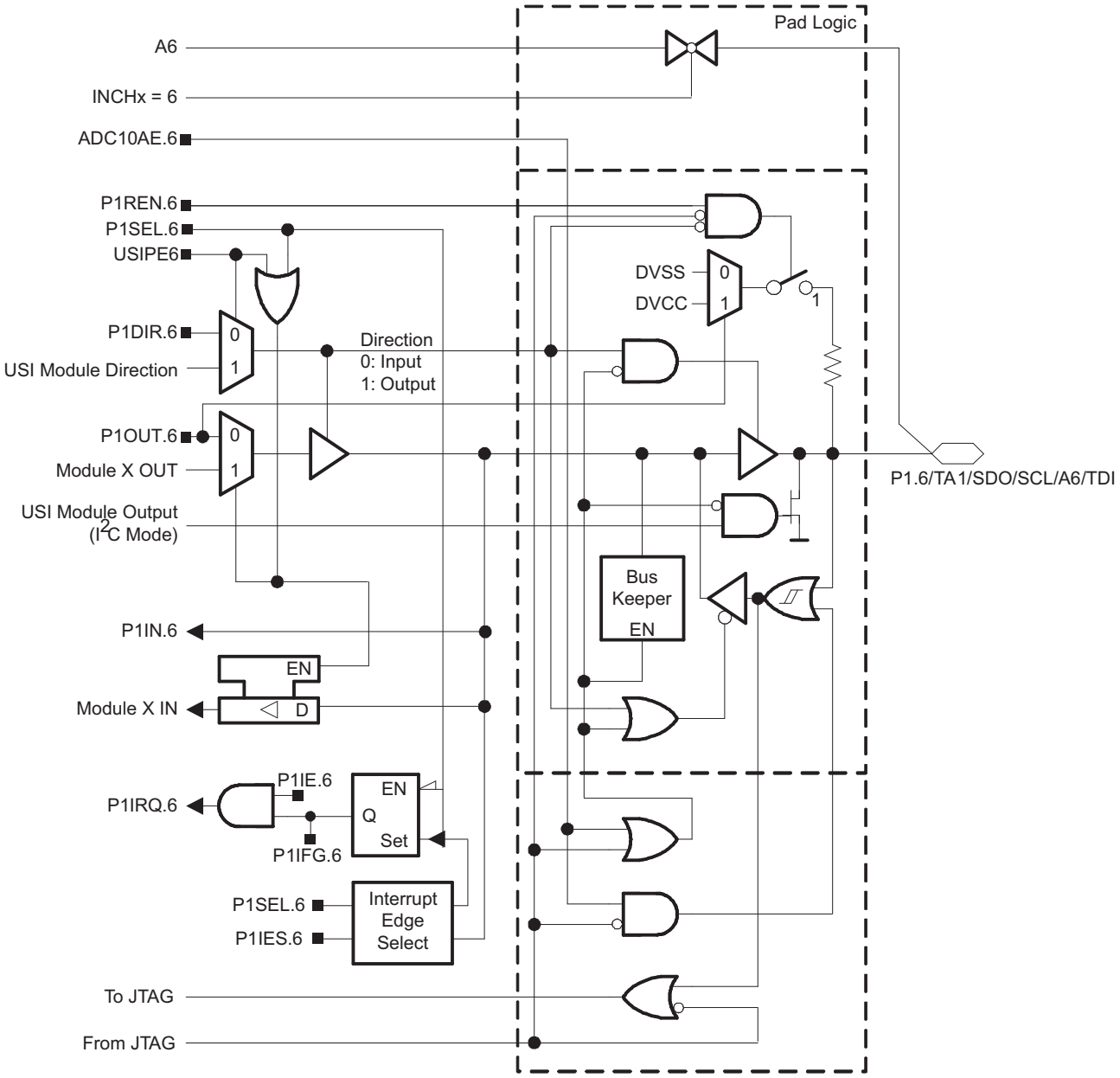

Port P1 (P1.7) Pin Schematics, MSP430F20x2

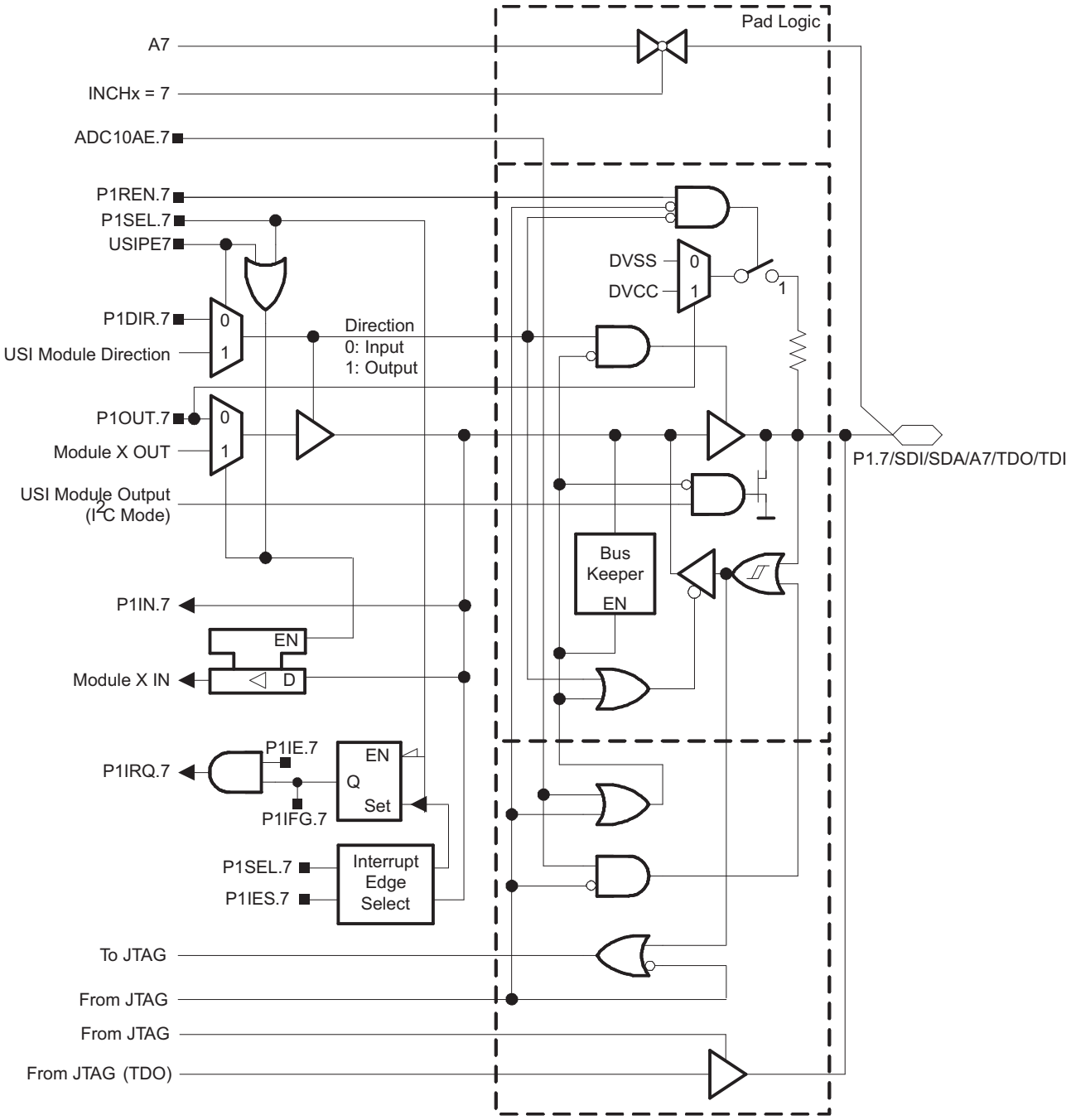

Copyright © 2005–2012, Texas Instruments Incorporated

Table 25. Port P1 (P1.4 to P1.7) Pin Functions, MSP430F20x2

PIN NAME (P1.x)	x	FUNCTION	CONTROL BITS / SIGNALS[1][2]					
			P1DIR.x	P1SEL.x	USIP.x	ADC10AE.x	INCHx	JTAG Mode
P1.4/SMCLK/A4/ VREF+/VeREF+/TCK	4	P1.4[3] input/output	0/1	0	N/A	0	N/A	0
		N/A	0	1	N/A	0	N/A	0
		SMCLK	1	1	N/A	0	N/A	0
		A4[4]	X	X	N/A	1	4	0
		VREF+/VeREF+[4][5]	X	X	N/A	1	N/A	0
		TCK[6]	X	X	N/A	X	X	1
P1.5/TA0/SCLK/A5/TMS	5	P1.5[3] input/output	0/1	0	0	0	N/A	0
		N/A	0	1	0	0	N/A	0
		Timer_A2.TA0	1	1	0	0	N/A	0
		SCLK	X	X	1	0	N/A	0
		A5[4]	X	X	X	1	5	0
		TMS[6]	X	X	X	X	X	1
P1.6/TA1/SDO/SCL/A6/TDI	6	P1.6[3] input/output	0/1	0	0	0	N/A	0
		Timer_A2.CCI1B	0	1	0	0	N/A	0
		Timer_A2.TA1	1	1	0	0	N/A	0
		SDO (SPI) / SCL (I2C)	X	X	1	0	N/A	0
		A6[4]	X	X	X	1	6	0
		TDI[6]	X	X	X	X	X	1
P1.7/SDI/SDA/A7/TDO/TDI	7	P1.7[3] input/output	0/1	0	0	0	N/A	0
		N/A	0	1	0	0	N/A	0
		DVSS	1	1	0	0	N/A	0
		SDI (SPI) / SDA (I2C)	X	X	1	0	N/A	0
		A7[4]	X	X	X	1	7	0
		TDO/TDI[6][7]	X	X	X	X	X	1

(1) X = Don't care
(2) N/A = Not available or not applicable
(3) Default after reset (PUC/POR)
(4) Setting the ADC10AE.x bit disables the output driver and the input Schmitt trigger to prevent parasitic cross currents when applying analog signals.
(5) The reference voltage is output if bit REFOUT in register ADC10CTL0 is set. An applied voltage is used as positive reference if bits SREF0/1 in register ADC10CTL0 are set to 10 or 11.
(6) In JTAG mode the internal pullup/down resistors are disabled.
(7) Function controlled by JTAG.

Copyright © 2005–2012, Texas Instruments Incorporated

Port P2 (P2.6) Pin Schematics, MSP430F20x2

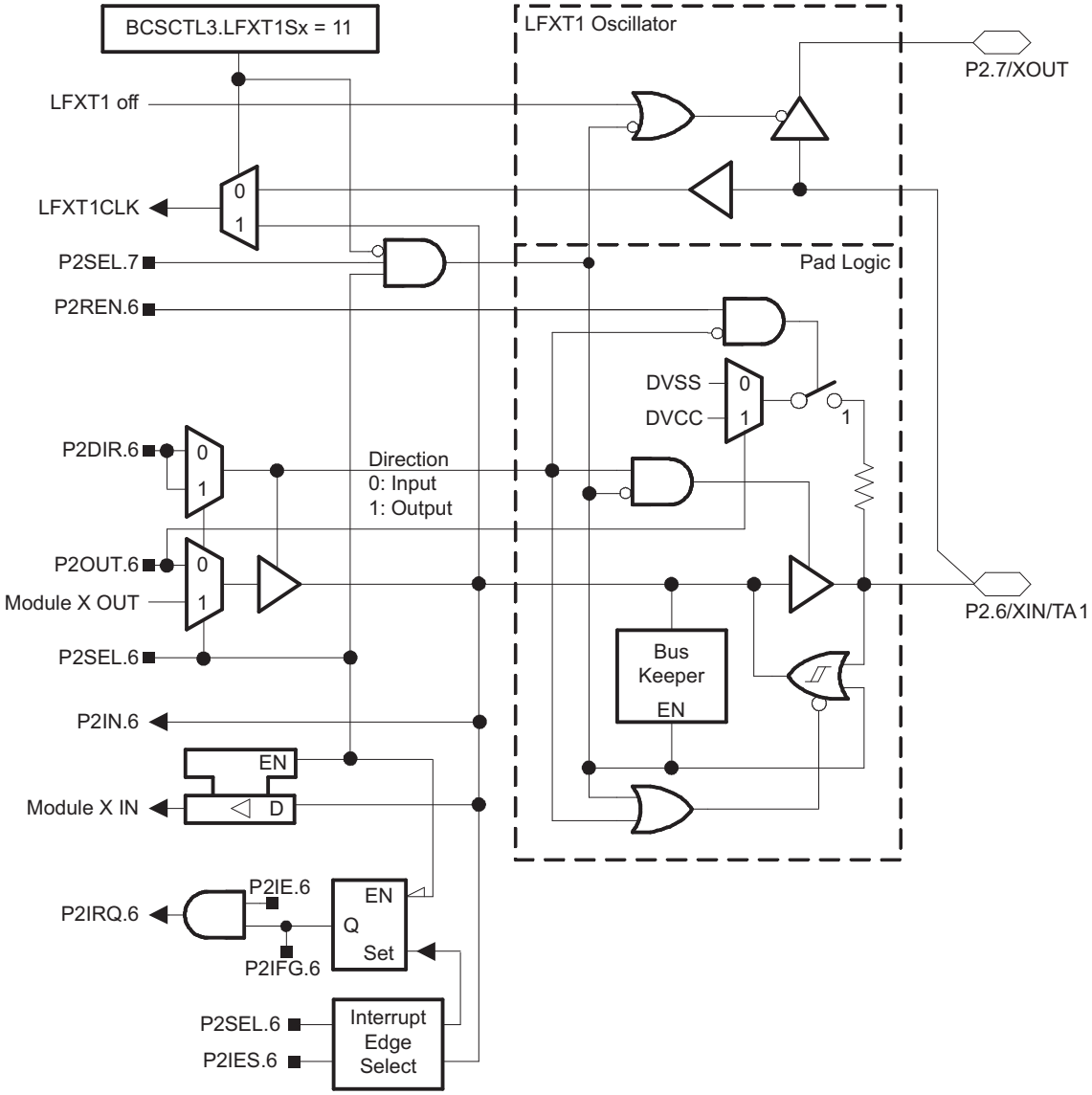

Table 26. Port P2 (P2.6) Pin Functions, MSP430F20x2

PIN NAME (P2.x)	x	FUNCTION	CONTROL BITS / SIGNALS	
			P2DIR.x	P2SEL.x
P2.6/XIN/TA1	6	P2.6 input/output	0/1	0
		XIN(1)(2)	0	1
		Timer_A2.TA1	1	1

(1) Default after reset (PUC/POR)
(2) XIN is used as digital clock input if the bits LFXT1Sx in register BCSCTL3 are set to 11.

Copyright © 2005–2012, Texas Instruments Incorporated

Port P2 (P2.7) Pin Schematics, MSP430F20x2

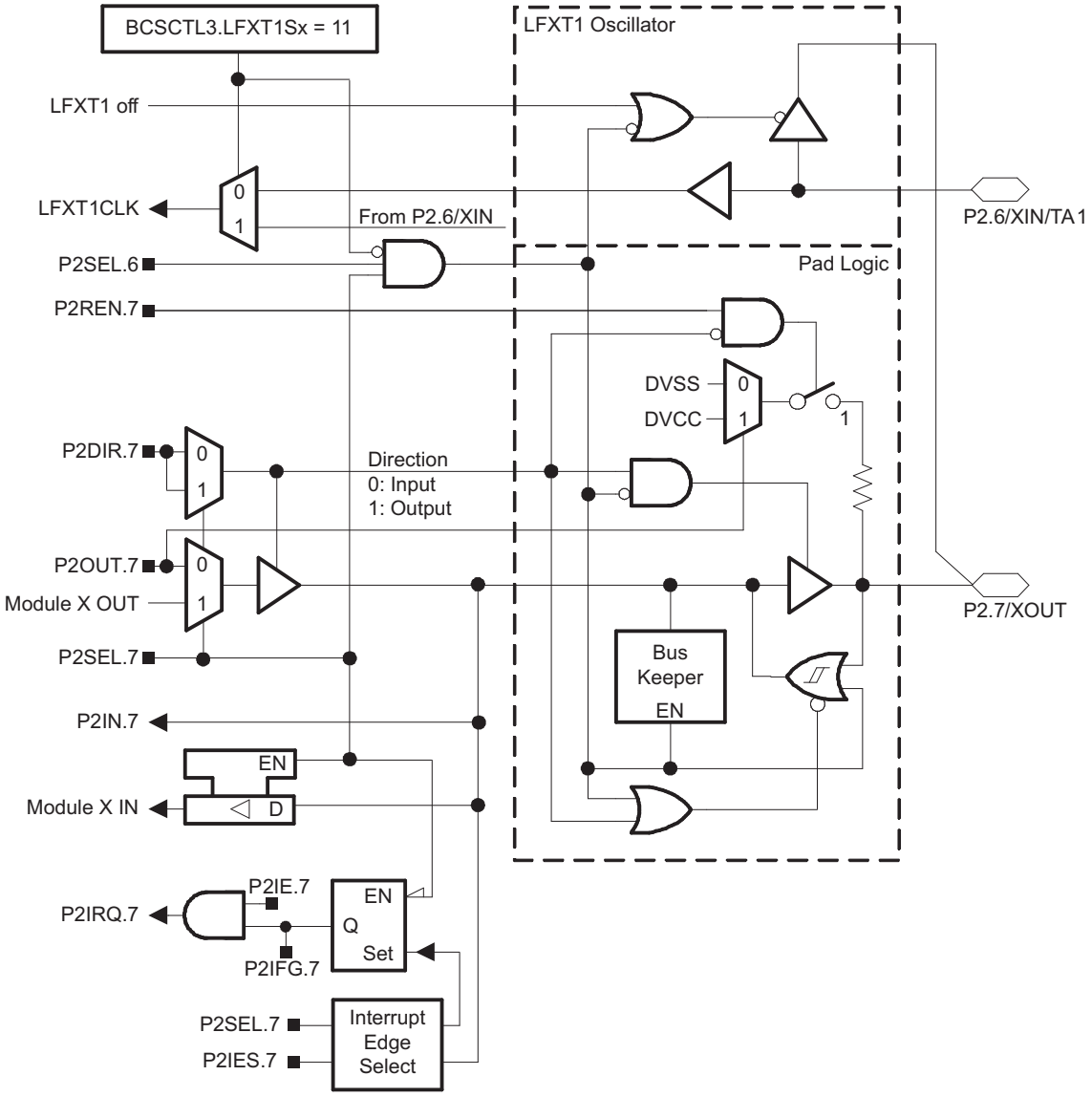

Table 27. Port P2 (P2.7) Pin Functions, MSP430F20x2

PIN NAME (P2.x)	x	FUNCTION	CONTROL BITS / SIGNALS	
			P2DIR.x	P2SEL.x
P2.7/XOUT	7	P2.7 input/output	0/1	0
		DVSS	0	1
		XOUT(1)(2)	1	1

(1) Default after reset (PUC/POR)
(2) If the pin P2.7/XOUT is used as an input a current can flow until P2SEL.7 is cleared due to the oscillator output driver connection to this pin after reset.

Copyright © 2005–2012, Texas Instruments Incorporated

APPLICATION INFORMATION, MSP430F20X3

Port P1 (P1.0) Pin Schematics, MSP430F20x3

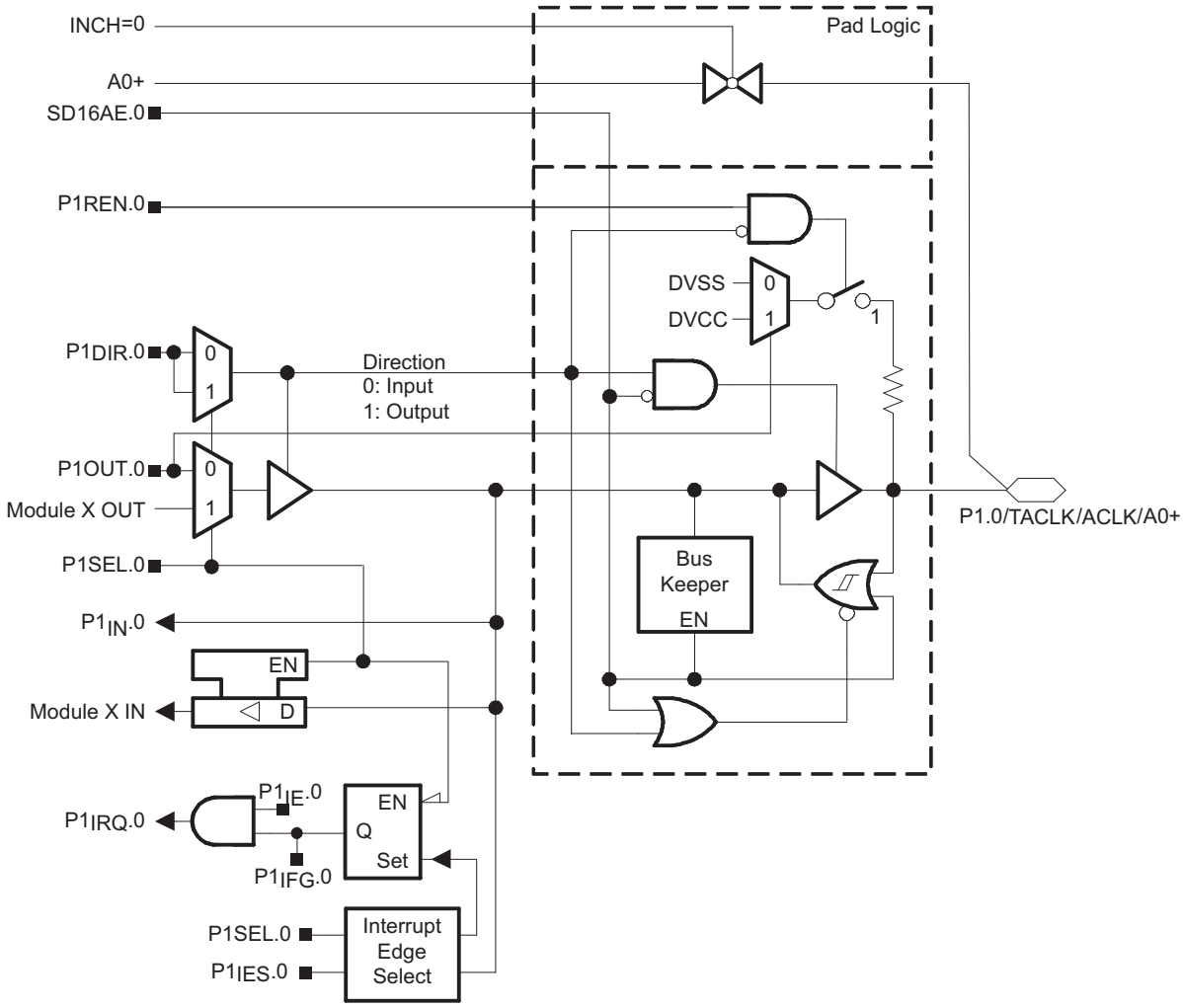

Copyright © 2005–2012, Texas Instruments Incorporated

Port P1 (P1.1) Pin Schematics, MSP430F20x3

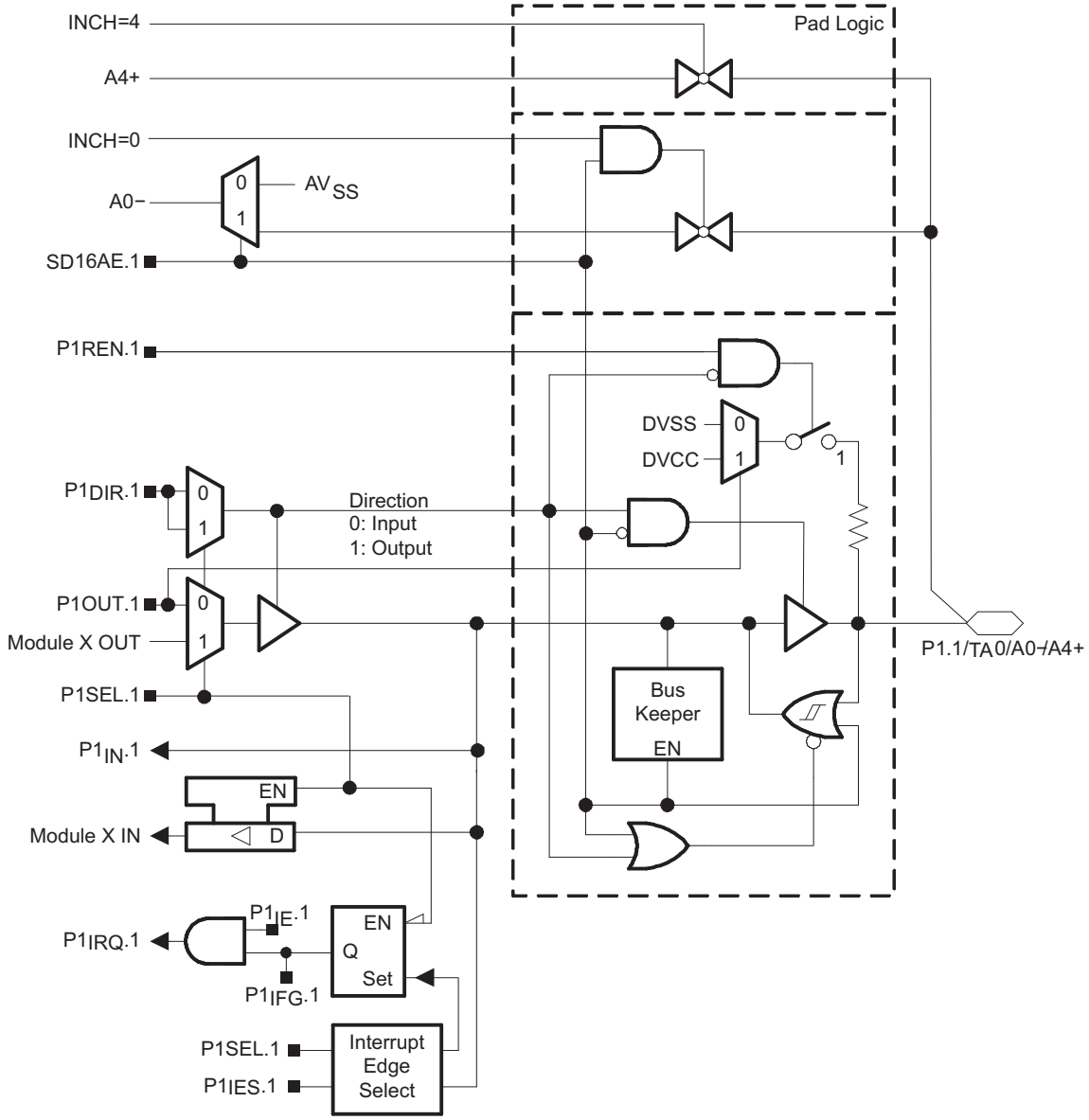

Port P1 (P1.2) Pin Schematics, MSP430F20x3

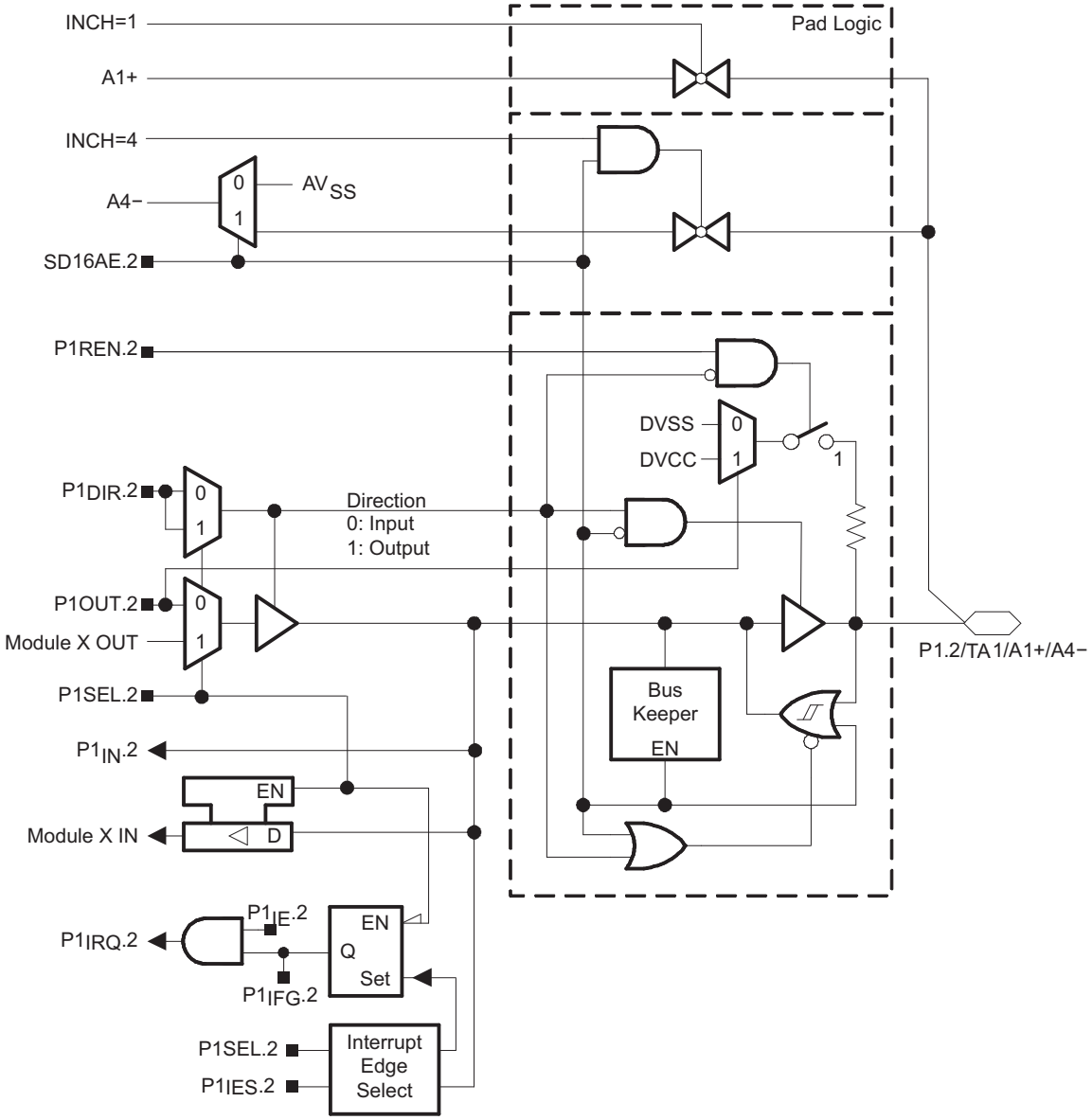

Copyright © 2005–2012, Texas Instruments Incorporated

Port P1 (P1.3) Pin Schematics, MSP430F20x3

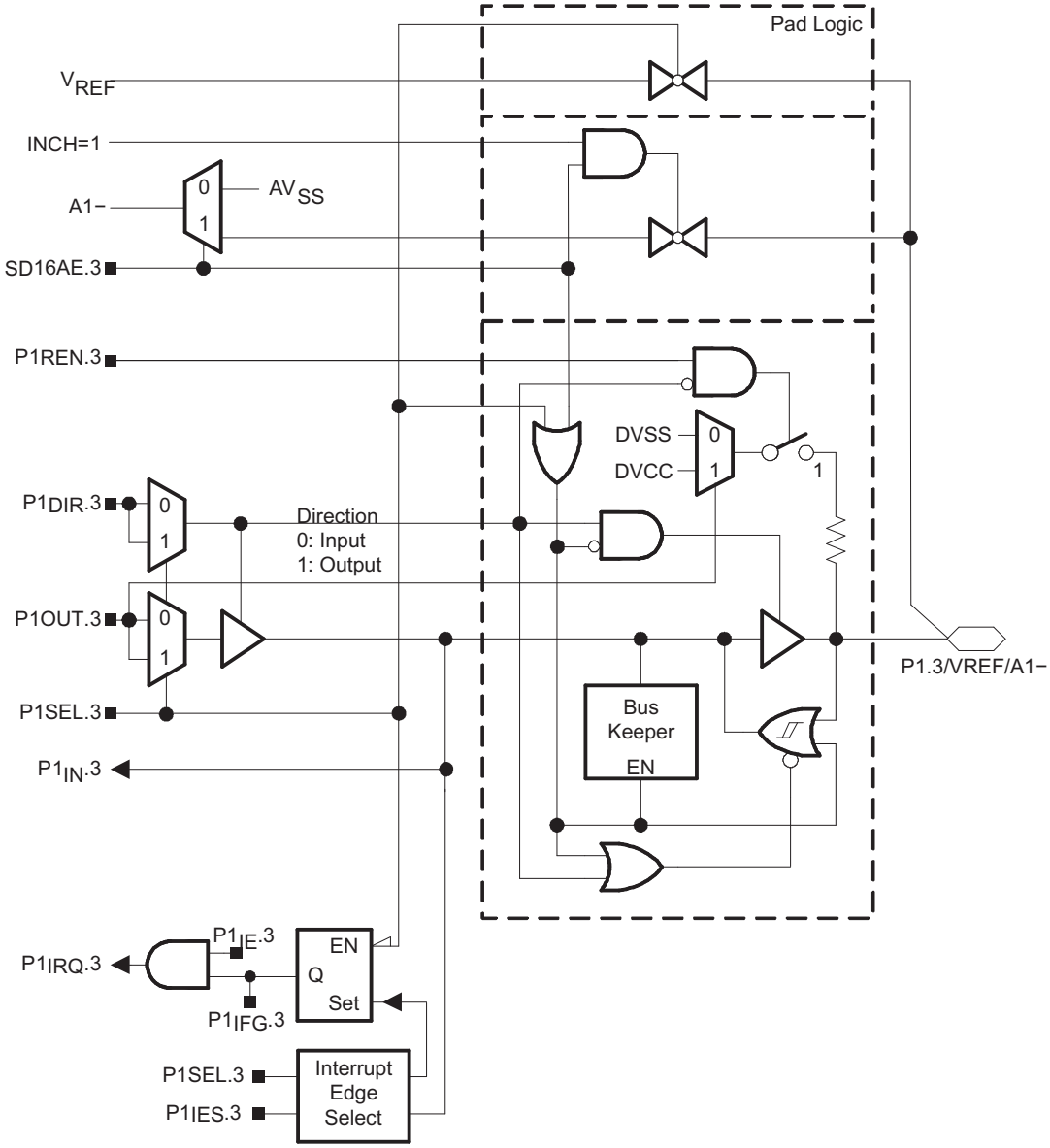

Table 28. Port P1 (P1.0 to P1.3) Pin Functions, MSP430F20x3

PIN NAME (P1.x)	x	FUNCTION	CONTROL BITS / SIGNALS[1][2]			
			P1DIR.x	P1SEL.x	SD16AE.x	INCHx
P1.0/TACLK/ACLK/A0+	0	P1.0[3] input/output	0/1	0	0	N/A
		Timer_A2.TACLK/INCLK	0	1	0	N/A
		ACLK	1	1	0	N/A
		A0+[4]	X	X	1	0
P1.1/TA0/A0-/A4+	1	P1.1[3] input/output	0/1	0	0	N/A
		Timer_A2.CCI0A	0	1	0	N/A
		Timer_A2.TA0	1	1	0	N/A
		A0-[4][5]	X	X	1	0
		A4+[4]	X	X	1	4
P1.2/TA1/A1+/A4-	2	P1.2[3] input/output	0/1	0	0	N/A
		Timer_A2.CCI1A	0	1	0	N/A
		Timer_A2.TA1	1	1	0	N/A
		A1+[4]	X	X	1	1
		A4-[4][5]	X	X	1	4
P1.3/VREF/A1-	3	P1.3[3] input/output	0/1	0	0	N/A
		VREF	X	1	0	N/A
		A1-[4][5]	X	X	1	1

(1) X = Don't care
(2) N/A = Not available or not applicable
(3) Default after reset (PUC/POR)
(4) Setting the SD16AE.x bit disables the output driver and the input Schmitt trigger to prevent parasitic cross currents when applying analog signals.
(5) With SD16AE.x = 0 the negative inputs are connected to VSS if the corresponding input is selected.

Copyright © 2005–2012, Texas Instruments Incorporated

Port P1 (P1.4) Pin Schematics, MSP430F20x3

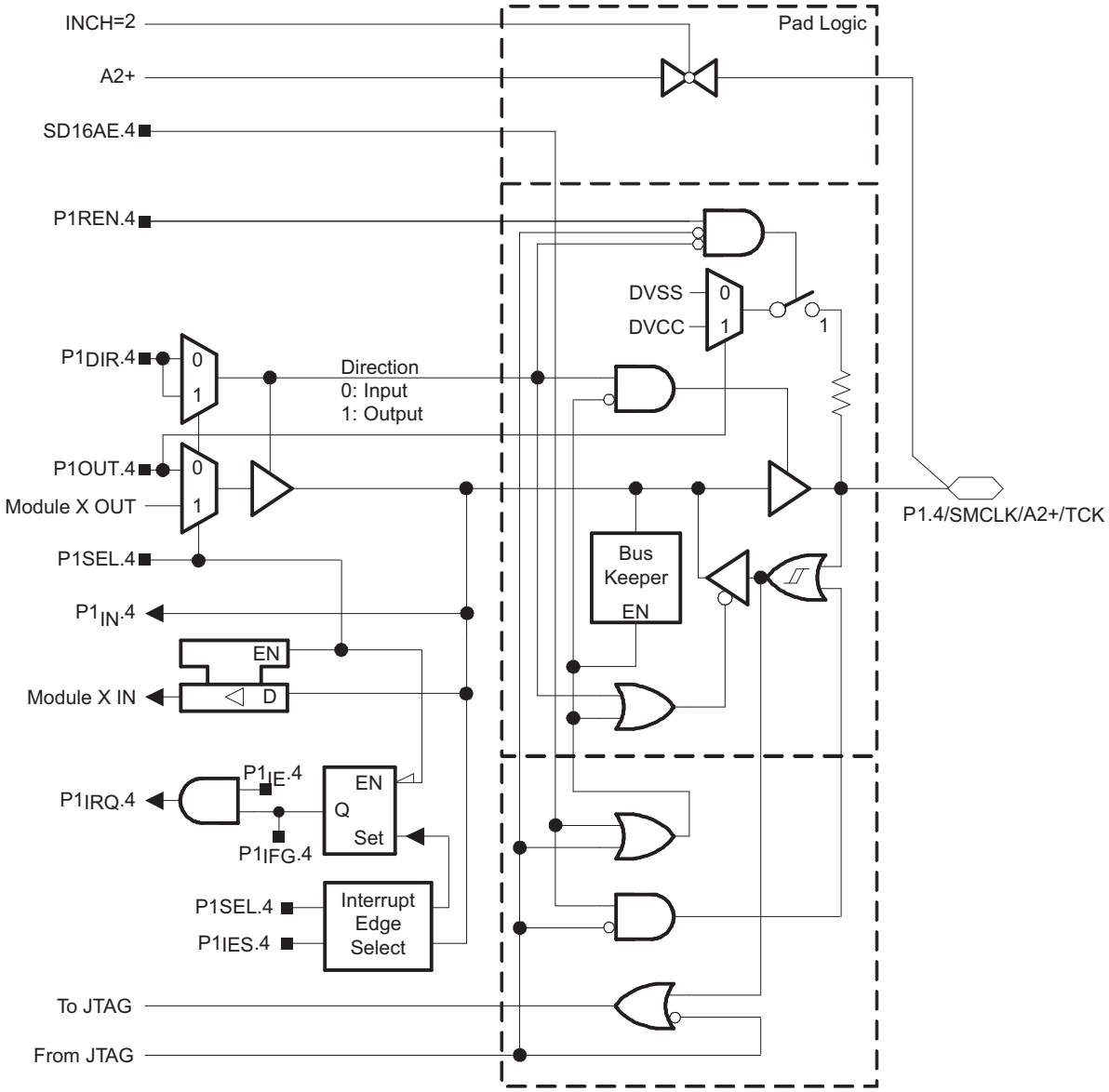

Port P1 (P1.5) Pin Schematics, MSP430F20x3

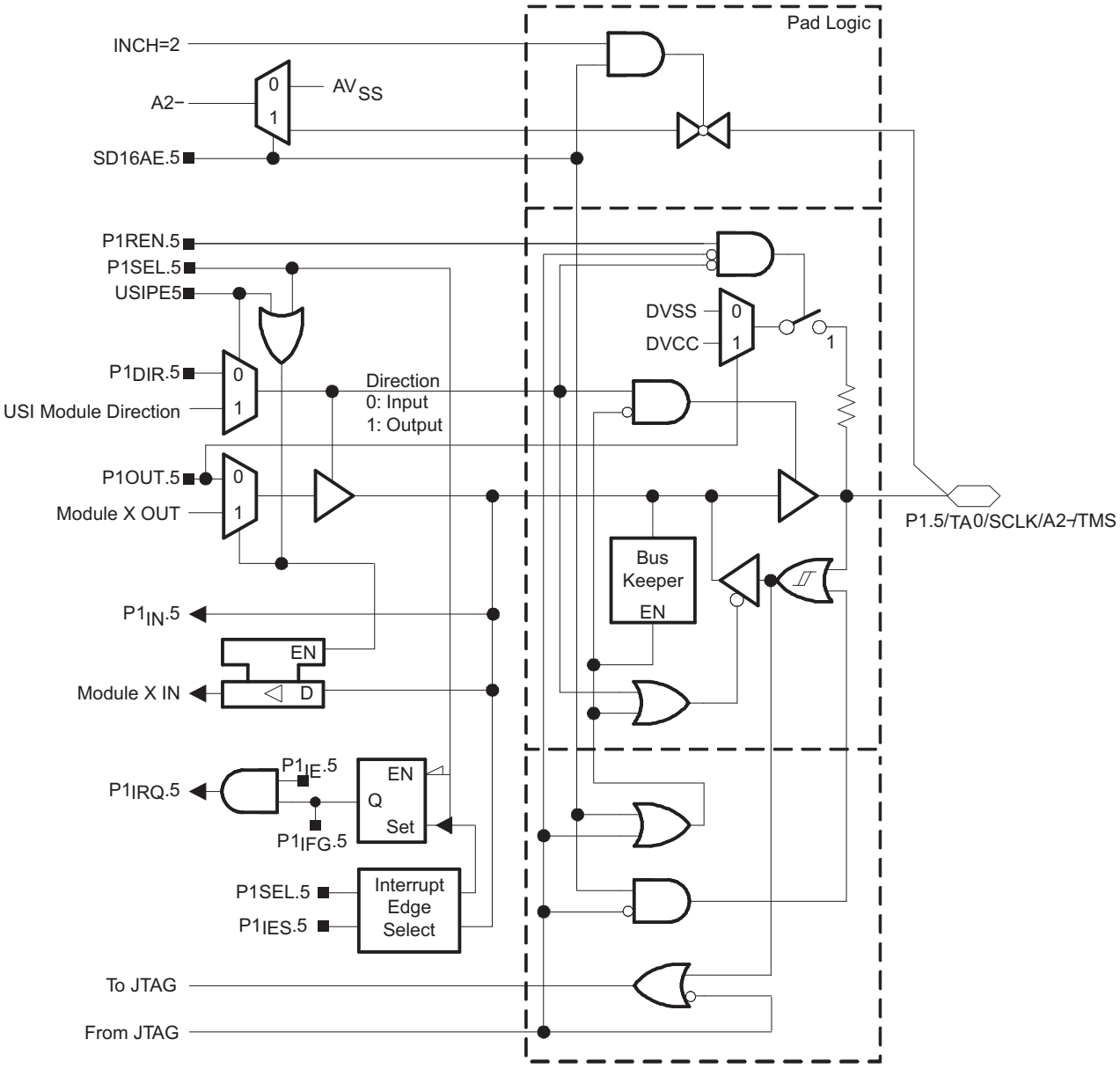

Copyright © 2005–2012, Texas Instruments Incorporated

Port P1 (P1.6) Pin Schematics, MSP430F20x3

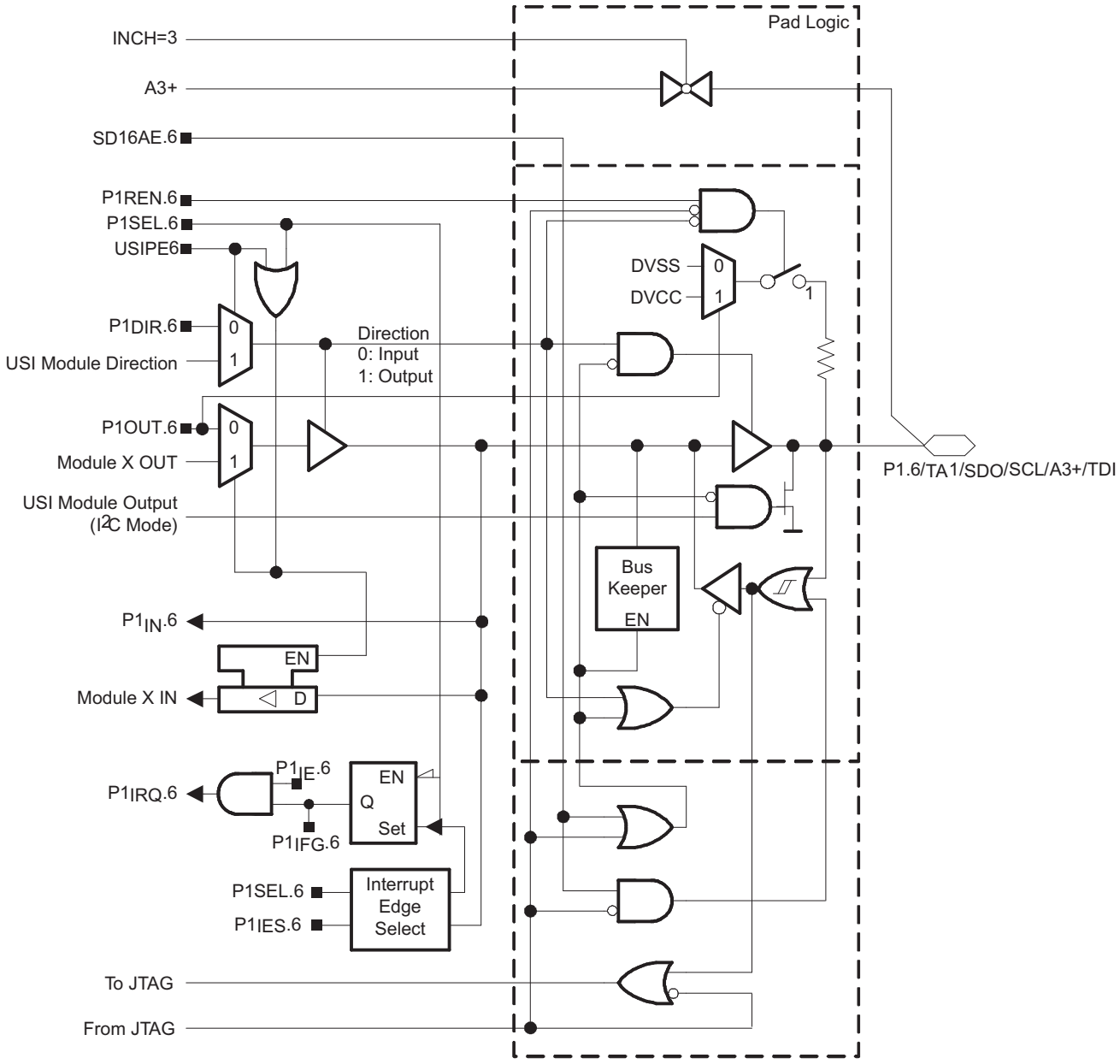

Port P1 (P1.7) Pin Schematics, MSP430F20x3

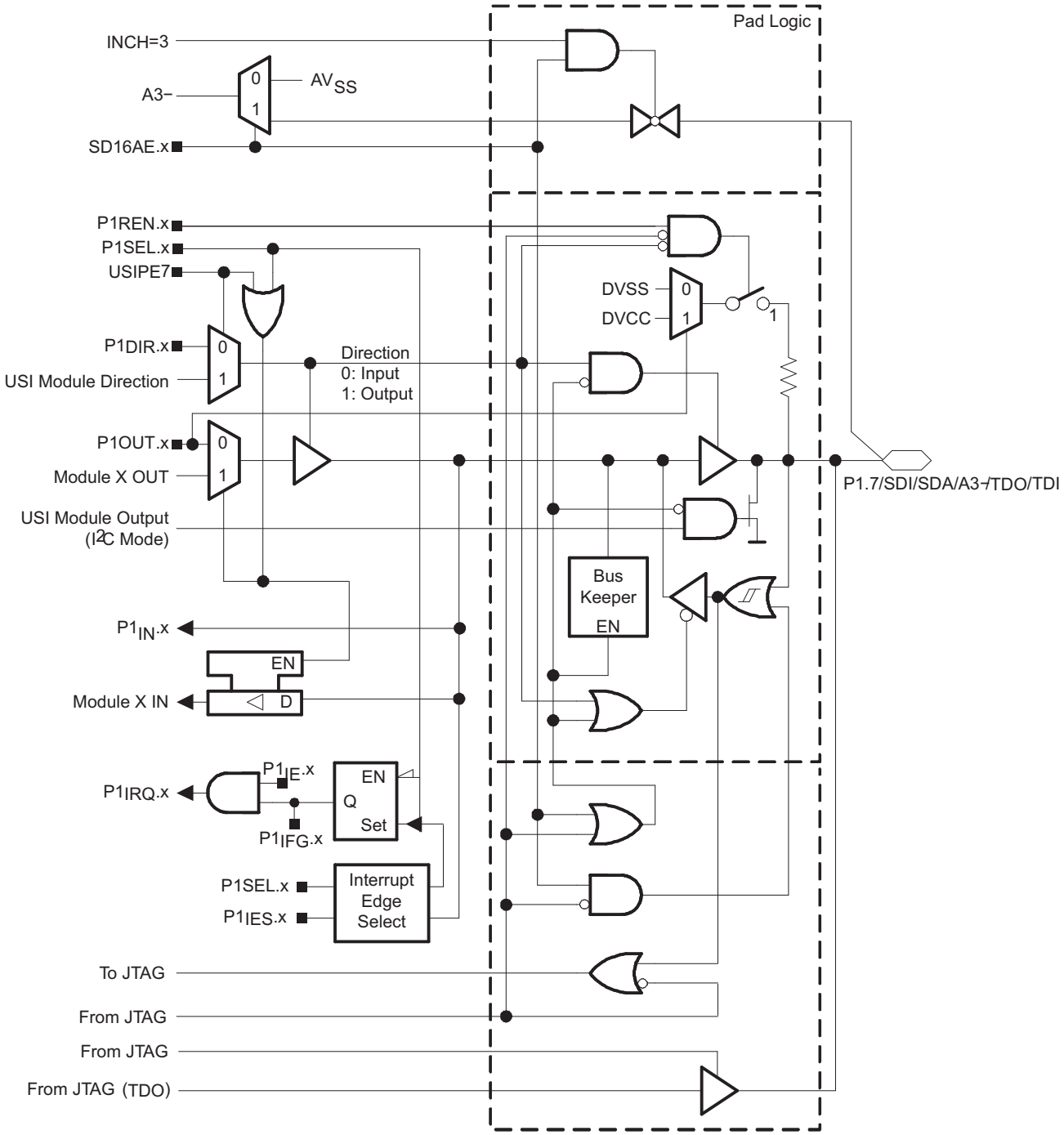

Copyright © 2005–2012, Texas Instruments Incorporated

Table 29. Port P1 (P1.4 to P1.7) Pin Functions, MSP430F20x3

PIN NAME (P1.x)	x	FUNCTION	CONTROL BITS / SIGNALS[1][2]					
			P1DIR.x	P1SEL.x	USIP.x	SD16AE.x	INCHx	JTAG Mode
P1.4/SMCLK/A2+/TCK	4	P1.4[3] input/output	0/1	0	N/A	0	N/A	0
		N/A	0	1	N/A	0	N/A	0
		SMCLK	1	1	N/A	0	N/A	0
		A2+[4]	X	X	N/A	1	2	0
		TCK[5]	X	X	N/A	X	X	1
P1.5/TA0/SCLK/A2-/TMS	5	P1.5[3] input/output	0/1	0	0	0	N/A	0
		N/A	0	1	0	0	N/A	0
		Timer_A2.TA0	1	1	0	0	N/A	0
		SCLK	X	X	1	0	N/A	0
		A2-[4][6]	X	X	X	1	2	0
		TMS[5]	X	X	X	X	X	1
P1.6/TA1/SDO/SCL/ A3+/TDI	6	P1.6[3] input/output	0/1	0	0	0	N/A	0
		Timer_A2.CCI1B	0	1	0	0	N/A	0
		Timer_A2.TA1	1	1	0	0	N/A	0
		SDO (SPI) / SCL (I2C)	X	X	1	0	N/A	0
		A3+[4]	X	X	X	1	3	0
		TDI[5]	X	X	X	X	X	1
P1.7/SDI/SDA/A3-/ TDO/TDI	7	P1.7[3] input/output	0/1	0	0	0	N/A	0
		N/A	0	1	0	0	N/A	0
		DVSS	1	1	0	0	N/A	0
		SDI (SPI) / SDA (I2C)	X	X	1	0	N/A	0
		A3-[4][6]	X	X	X	1	3	0
		TDO/TDI[7][5]	X	X	X	X	X	1

(1) X = Don't care
(2) N/A = Not available or not applicable
(3) Default after reset (PUC/POR)
(4) Setting the SD16AE.x bit disables the output driver and the input Schmitt trigger to prevent parasitic cross currents when applying analog signals.
(5) In JTAG mode, the internal pullup and pulldown resistors are disabled.
(6) With SD16AE.x = 0 the negative inputs are connected to VSS if the corresponding input is selected.
(7) Function controlled by JTAG

Copyright © 2005–2012, Texas Instruments Incorporated

Port P2 (P2.6) Pin Schematics, MSP430F20x3

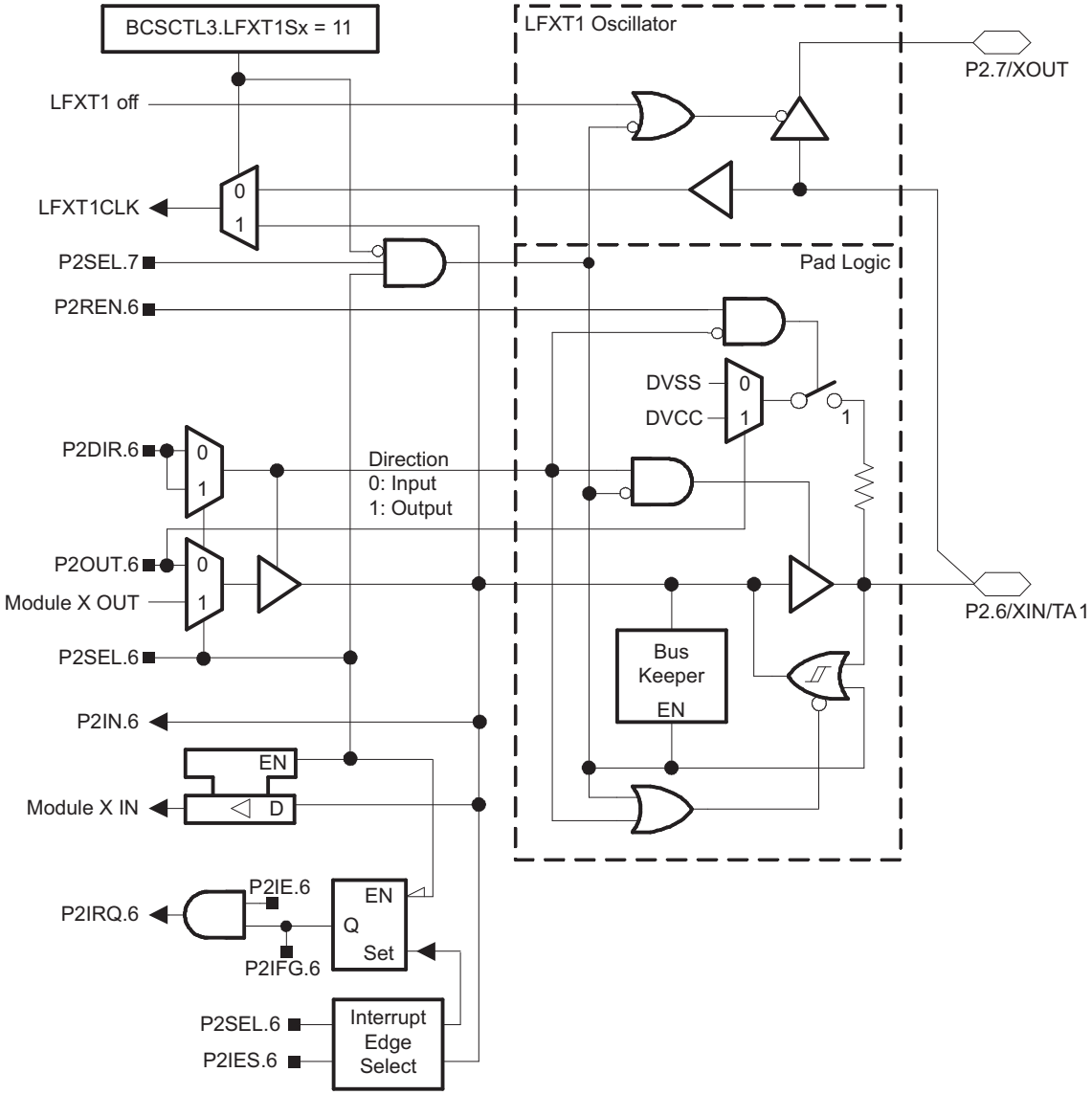

Table 30. Port P2 (P2.6) Pin Functions, MSP430F20x3

PIN NAME (P2.x)	x	FUNCTION	CONTROL BITS / SIGNALS	
			P2DIR.x	P2SEL.x
P2.6/XIN/TA1	6	P2.6 input/output	0/1	0
		XIN(1)(2)	0	1
		Timer_A2.TA1	1	1

(1) Default after reset (PUC/POR)
(2) XIN is used as digital clock input if the bits LFXT1Sx in register BCSCTL3 are set to 11.

Copyright © 2005–2012, Texas Instruments Incorporated

Port P2 (P2.7) Pin Schematics, MSP430F20x3

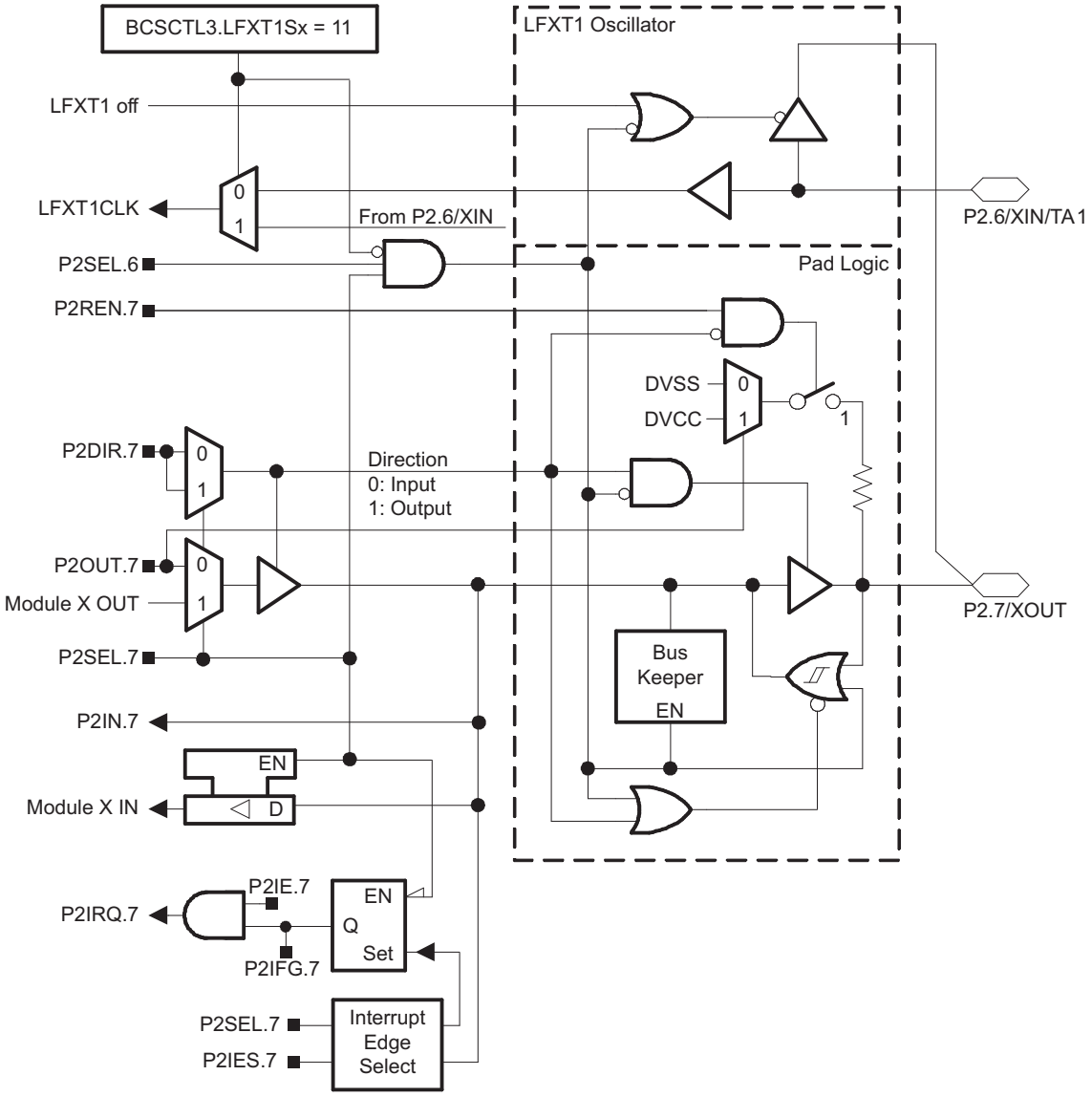

Table 31. Port P2 (P2.7) Pin Functions, MSP430F20x3

PIN NAME (P2.x)	x	FUNCTION	CONTROL BITS / SIGNALS	
			P2DIR.x	P2SEL.x
P2.7/XOUT	7	P2.7 input/output	0/1	0
		DVSS	0	1
		XOUT(1)(2)	1	1

(1) Default after reset (PUC/POR)
(2) If the pin P2.7/XOUT is used as an input a current can flow until P2SEL.7 is cleared due to the oscillator output driver connection to this pin after reset.

Copyright © 2005–2012, Texas Instruments Incorporated

REVISION HISTORY

LITERATURE NUMBER	SUMMARY
SLAS491	Preliminary PRODUCT PREVIEW data sheet release
SLAS491A	Production data sheet release for MSP430F20x3I. Updated specification and added characterization graphs.
SLAS491B	Production data sheet release for MSP430F20x3T, MSP430F20x1I and MSP430F20x1T. 105°C characterization results added. SD16_A SINAD characterization results for MSP430F20x3. RSA package added. Updated SD16_A Power Supply Rejection specification. DCO Calibration Register names: lower case "z" changed to upper case "Z". $V_{hys(B_IT-)}$ MAX specification increased from 180 mV to 210 mV. MIN and MAX percentages for "calibrated DCO frequencies - tolerance over supply voltage VCC" corrected from 2.5% to 3.0% to match the specified frequency ranges.
SLAS491C	Production data sheet release for MSP430F20x2I and MSP430F20x2T.
SLAS491D	Changed f_{ACLK} to 0 Hz in I_{LPM4} test conditions in Low-Power Mode Supply Currents (Into V_{CC}) Excluding External Current.
SLAS491E	Changed T_{stg} maximum for programmed devices to 150°C in Absolute Maximum Ratings.
SLAS491F	Added ADC10 data transfer registers to Peripheral File Map
SLAS491G	Changed Test Conditions for "Duty cycle, LF mode" in Crystal Oscillator, XT1, Low-Frequency Mode. Changed note (1) on 10-Bit ADC, Built-In Voltage Reference. Changed USIP.x Control Bits in Table 25 and Table 29.
SLAS491H	Changed T_{stg}, Programmed device, to -55°C to 150°C in Absolute Maximum Ratings.
SLAS491I	Added typical value test conditions to Recommended Operating Conditions. Added note (2) to POR and Brownout Reset (BOR).

Copyright © 2005–2012, Texas Instruments Incorporated

PACKAGING INFORMATION

Orderable Device	Status (1)	Package Type	Package Drawing	Pins	Package Qty	Eco Plan (2)	Lead finish/ Ball material (6)	MSL Peak Temp (3)	Op Temp (°C)	Device Marking (4/5)	Samples
MSP430F2001IN	ACTIVE	PDIP	N	14	25	RoHS & Green	NIPDAU	Level-1-260C-UNLIM	-40 to 85	MSP430F2001	Samples
MSP430F2001IPW	ACTIVE	TSSOP	PW	14	90	RoHS & Green	NIPDAU	Level-1-260C-UNLIM	-40 to 85	F2001	Samples
MSP430F2001IPWR	ACTIVE	TSSOP	PW	14	2000	RoHS & Green	NIPDAU	Level-1-260C-UNLIM	-40 to 85	F2001	Samples
MSP430F2001IRSAR	ACTIVE	QFN	RSA	16	3000	RoHS & Green	NIPDAU	Level-2-260C-1 YEAR	-40 to 85	M430F 2001	Samples
MSP430F2001IRSAT	ACTIVE	QFN	RSA	16	250	RoHS & Green	NIPDAU	Level-2-260C-1 YEAR	-40 to 85	M430F 2001	Samples
MSP430F2001TN	ACTIVE	PDIP	N	14	25	RoHS & Green	NIPDAU	Level-1-260C-UNLIM	-40 to 105	MSP430F2001T	Samples
MSP430F2001TPW	ACTIVE	TSSOP	PW	14	90	RoHS & Green	NIPDAU	Level-1-260C-UNLIM	-40 to 105	F2001T	Samples
MSP430F2001TPWR	ACTIVE	TSSOP	PW	14	2000	RoHS & Green	NIPDAU	Level-1-260C-UNLIM	-40 to 105	F2001T	Samples
MSP430F2001TRSAR	ACTIVE	QFN	RSA	16	3000	RoHS & Green	NIPDAU	Level-2-260C-1 YEAR	-40 to 105	M430F 2001T	Samples
MSP430F2001TRSAT	ACTIVE	QFN	RSA	16	250	RoHS & Green	NIPDAU	Level-2-260C-1 YEAR	-40 to 105	M430F 2001T	Samples
MSP430F2002IN	ACTIVE	PDIP	N	14	25	RoHS & Green	NIPDAU	Level-1-260C-UNLIM	-40 to 85	MSP430F2002	Samples
MSP430F2002IPW	ACTIVE	TSSOP	PW	14	90	RoHS & Green	NIPDAU	Level-1-260C-UNLIM	-40 to 85	F2002	Samples
MSP430F2002IPWR	ACTIVE	TSSOP	PW	14	2000	RoHS & Green	NIPDAU	Level-1-260C-UNLIM	-40 to 85	F2002	Samples
MSP430F2002IRSAR	ACTIVE	QFN	RSA	16	3000	RoHS & Green	NIPDAU	Level-2-260C-1 YEAR	-40 to 85	M430F 2002	Samples
MSP430F2002IRSAT	ACTIVE	QFN	RSA	16	250	RoHS & Green	NIPDAU	Level-2-260C-1 YEAR	-40 to 85	M430F 2002	Samples
MSP430F2002TN	ACTIVE	PDIP	N	14	25	RoHS & Green	NIPDAU	Level-1-260C-UNLIM	-40 to 105	MSP430F2002T	Samples
MSP430F2002TPW	ACTIVE	TSSOP	PW	14	90	RoHS & Green	NIPDAU	Level-1-260C-UNLIM	-40 to 105	F2002T	Samples
MSP430F2002TPWR	ACTIVE	TSSOP	PW	14	2000	RoHS & Green	NIPDAU	Level-1-260C-UNLIM	-40 to 105	F2002T	Samples
MSP430F2002TRSAR	ACTIVE	QFN	RSA	16	3000	RoHS & Green	NIPDAU	Level-2-260C-1 YEAR	-40 to 105	M430F	Samples

Orderable Device	Status (1)	Package Type	Package Drawing	Pins	Package Qty	Eco Plan (2)	Lead finish/ Ball material (6)	MSL Peak Temp (3)	Op Temp (°C)	Device Marking (4/5)	Samples
										2002T	
MSP430F2002TRSAT	ACTIVE	QFN	RSA	16	250	RoHS & Green	NIPDAU	Level-2-260C-1 YEAR	-40 to 105	M430F 2002T	Samples
MSP430F2003IN	ACTIVE	PDIP	N	14	25	RoHS & Green	NIPDAU	Level-1-260C-UNLIM	-40 to 85	MSP430F2003	Samples
MSP430F2003IPW	ACTIVE	TSSOP	PW	14	90	RoHS & Green	NIPDAU	Level-1-260C-UNLIM	-40 to 85	F2003	Samples
MSP430F2003IPWR	ACTIVE	TSSOP	PW	14	2000	RoHS & Green	NIPDAU	Level-1-260C-UNLIM	-40 to 85	F2003	Samples
MSP430F2003IRSAR	ACTIVE	QFN	RSA	16	3000	RoHS & Green	NIPDAU	Level-2-260C-1 YEAR	-40 to 85	M430F 2003	Samples
MSP430F2003IRSAT	ACTIVE	QFN	RSA	16	250	RoHS & Green	NIPDAU	Level-2-260C-1 YEAR	-40 to 85	M430F 2003	Samples
MSP430F2003TN	ACTIVE	PDIP	N	14	25	RoHS & Green	NIPDAU	Level-1-260C-UNLIM	-40 to 105	MSP430F2003T	Samples
MSP430F2003TPW	ACTIVE	TSSOP	PW	14	90	RoHS & Green	NIPDAU	Level-1-260C-UNLIM	-40 to 105	F2003T	Samples
MSP430F2003TPWR	ACTIVE	TSSOP	PW	14	2500	RoHS & Green	NIPDAU	Level-1-260C-UNLIM	-40 to 105	F2003T	Samples
MSP430F2003TRSAR	ACTIVE	QFN	RSA	16	3000	RoHS & Green	NIPDAU	Level-2-260C-1 YEAR	-40 to 105	M430F 2003T	Samples
MSP430F2003TRSAT	ACTIVE	QFN	RSA	16	250	RoHS & Green	NIPDAU	Level-2-260C-1 YEAR	-40 to 105	M430F 2003T	Samples
MSP430F2011IN	ACTIVE	PDIP	N	14	25	RoHS & Green	NIPDAU	Level-1-260C-UNLIM	-40 to 85	MSP430F2011	Samples
MSP430F2011IPW	ACTIVE	TSSOP	PW	14	90	RoHS & Green	NIPDAU	Level-1-260C-UNLIM	-40 to 85	F2011	Samples
MSP430F2011IPWR	ACTIVE	TSSOP	PW	14	2000	RoHS & Green	NIPDAU	Level-1-260C-UNLIM	-40 to 85	F2011	Samples
MSP430F2011IRSAR	ACTIVE	QFN	RSA	16	3000	RoHS & Green	NIPDAU	Level-2-260C-1 YEAR	-40 to 85	M430F 2011	Samples
MSP430F2011IRSAT	ACTIVE	QFN	RSA	16	250	RoHS & Green	NIPDAU	Level-2-260C-1 YEAR	-40 to 85	M430F 2011	Samples
MSP430F2011TN	ACTIVE	PDIP	N	14	25	RoHS & Green	NIPDAU	Level-1-260C-UNLIM	-40 to 105	MSP430F2011T	Samples
MSP430F2011TPW	ACTIVE	TSSOP	PW	14	90	RoHS & Green	NIPDAU	Level-1-260C-UNLIM	-40 to 105	F2011T	Samples
MSP430F2011TPWR	ACTIVE	TSSOP	PW	14	2000	RoHS & Green	NIPDAU	Level-1-260C-UNLIM	-40 to 105	F2011T	Samples

Orderable Device	Status (1)	Package Type	Package Drawing	Pins	Package Qty	Eco Plan (2)	Lead finish/ Ball material (6)	MSL Peak Temp (3)	Op Temp (°C)	Device Marking (4/5)	Samples
MSP430F2011TRSAR	ACTIVE	QFN	RSA	16	3000	RoHS & Green	NIPDAU	Level-2-260C-1 YEAR	-40 to 105	M430F 2011T	Samples
MSP430F2011TRSAT	ACTIVE	QFN	RSA	16	250	RoHS & Green	NIPDAU	Level-2-260C-1 YEAR	-40 to 105	M430F 2011T	Samples
MSP430F2012IN	ACTIVE	PDIP	N	14	25	RoHS & Green	NIPDAU	Level-1-260C-UNLIM	-40 to 85	MSP430F2012	Samples
MSP430F2012IPW	ACTIVE	TSSOP	PW	14	90	RoHS & Green	NIPDAU	Level-1-260C-UNLIM	-40 to 85	F2012	Samples
MSP430F2012IPWR	ACTIVE	TSSOP	PW	14	2000	RoHS & Green	NIPDAU	Level-1-260C-UNLIM	-40 to 85	F2012	Samples
MSP430F2012IRSAR	ACTIVE	QFN	RSA	16	3000	RoHS & Green	NIPDAU	Level-2-260C-1 YEAR	-40 to 85	M430F 2012	Samples
MSP430F2012IRSAT	ACTIVE	QFN	RSA	16	250	RoHS & Green	NIPDAU	Level-2-260C-1 YEAR	-40 to 85	M430F 2012	Samples
MSP430F2012TN	ACTIVE	PDIP	N	14	25	RoHS & Green	NIPDAU	Level-1-260C-UNLIM	-40 to 105	MSP430F2012T	Samples
MSP430F2012TPW	ACTIVE	TSSOP	PW	14	90	RoHS & Green	NIPDAU	Level-1-260C-UNLIM	-40 to 105	F2012T	Samples
MSP430F2012TPWR	ACTIVE	TSSOP	PW	14	2000	RoHS & Green	NIPDAU	Level-1-260C-UNLIM	-40 to 105	F2012T	Samples
MSP430F2012TRSAR	ACTIVE	QFN	RSA	16	3000	RoHS & Green	NIPDAU	Level-2-260C-1 YEAR	-40 to 105	M430F 2012T	Samples
MSP430F2012TRSAT	ACTIVE	QFN	RSA	16	250	RoHS & Green	NIPDAU	Level-2-260C-1 YEAR	-40 to 105	M430F 2012T	Samples
MSP430F2013IN	ACTIVE	PDIP	N	14	25	RoHS & Green	NIPDAU	Level-1-260C-UNLIM	-40 to 85	MSP430F2013	Samples
MSP430F2013IPW	ACTIVE	TSSOP	PW	14	90	RoHS & Green	NIPDAU	Level-1-260C-UNLIM	-40 to 85	F2013	Samples
MSP430F2013IPWR	ACTIVE	TSSOP	PW	14	2000	RoHS & Green	NIPDAU	Level-1-260C-UNLIM	-40 to 85	F2013	Samples
MSP430F2013IRSAR	ACTIVE	QFN	RSA	16	3000	RoHS & Green	NIPDAU	Level-2-260C-1 YEAR	-40 to 85	M430F 2013	Samples
MSP430F2013IRSAT	ACTIVE	QFN	RSA	16	250	RoHS & Green	NIPDAU	Level-2-260C-1 YEAR	-40 to 85	M430F 2013	Samples
MSP430F2013TN	ACTIVE	PDIP	N	14	25	RoHS & Green	NIPDAU	Level-1-260C-UNLIM	-40 to 105	MSP430F2013T	Samples
MSP430F2013TPW	ACTIVE	TSSOP	PW	14	90	RoHS & Green	NIPDAU	Level-1-260C-UNLIM	-40 to 105	F2013T	Samples

Orderable Device	Status (1)	Package Type	Package Drawing	Pins	Package Qty	Eco Plan (2)	Lead finish/ Ball material (6)	MSL Peak Temp (3)	Op Temp (°C)	Device Marking (4/5)	Samples
MSP430F2013TPWR	ACTIVE	TSSOP	PW	14	2000	RoHS & Green	NIPDAU	Level-1-260C-UNLIM	-40 to 105	F2013T	Samples
MSP430F2013TRSAR	ACTIVE	QFN	RSA	16	3000	RoHS & Green	NIPDAU	Level-2-260C-1 YEAR	-40 to 105	M430F 2013T	Samples
MSP430F2013TRSAT	ACTIVE	QFN	RSA	16	250	RoHS & Green	NIPDAU	Level-2-260C-1 YEAR	-40 to 105	M430F 2013T	Samples

(1) The marketing status values are defined as follows:
ACTIVE: Product device recommended for new designs.
LIFEBUY: TI has announced that the device will be discontinued, and a lifetime-buy period is in effect.
NRND: Not recommended for new designs. Device is in production to support existing customers, but TI does not recommend using this part in a new design.
PREVIEW: Device has been announced but is not in production. Samples may or may not be available.
OBSOLETE: TI has discontinued the production of the device.

(2) **RoHS:** TI defines "RoHS" to mean semiconductor products that are compliant with the current EU RoHS requirements for all 10 RoHS substances, including the requirement that RoHS substance do not exceed 0.1% by weight in homogeneous materials. Where designed to be soldered at high temperatures, "RoHS" products are suitable for use in specified lead-free processes. TI may reference these types of products as "Pb-Free".
RoHS Exempt: TI defines "RoHS Exempt" to mean products that contain lead but are compliant with EU RoHS pursuant to a specific EU RoHS exemption.
Green: TI defines "Green" to mean the content of Chlorine (Cl) and Bromine (Br) based flame retardants meet JS709B low halogen requirements of <=1000ppm threshold. Antimony trioxide based flame retardants must also meet the <=1000ppm threshold requirement.

(3) MSL, Peak Temp. - The Moisture Sensitivity Level rating according to the JEDEC industry standard classifications, and peak solder temperature.

(4) There may be additional marking, which relates to the logo, the lot trace code information, or the environmental category on the device.

(5) Multiple Device Markings will be inside parentheses. Only one Device Marking contained in parentheses and separated by a "~" will appear on a device. If a line is indented then it is a continuation of the previous line and the two combined represent the entire Device Marking for that device.

(6) Lead finish/Ball material - Orderable Devices may have multiple material finish options. Finish options are separated by a vertical ruled line. Lead finish/Ball material values may wrap to two lines if the finish value exceeds the maximum column width.

Important Information and Disclaimer: The information provided on this page represents TI's knowledge and belief as of the date that it is provided. TI bases its knowledge and belief on information provided by third parties, and makes no representation or warranty as to the accuracy of such information. Efforts are underway to better integrate information from third parties. TI has taken and continues to take reasonable steps to provide representative and accurate information but may not have conducted destructive testing or chemical analysis on incoming materials and chemicals. TI and TI suppliers consider certain information to be proprietary, and thus CAS numbers and other limited information may not be available for release.

In no event shall TI's liability arising out of such information exceed the total purchase price of the TI part(s) at issue in this document sold by TI to Customer on an annual basis.

OTHER QUALIFIED VERSIONS OF MSP430F2013 :

- Enhanced Product: MSP430F2013-EP

NOTE: Qualified Version Definitions:

- Enhanced Product - Supports Defense, Aerospace and Medical Applications

TAPE AND REEL INFORMATION

REEL DIMENSIONS

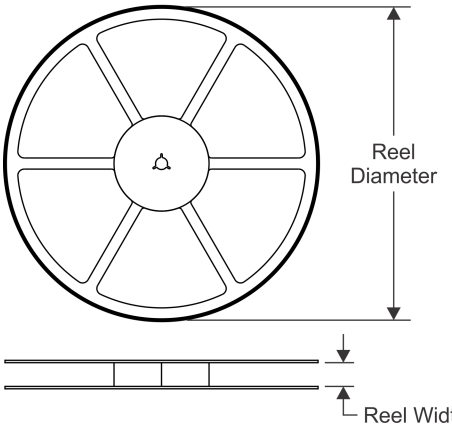

TAPE DIMENSIONS

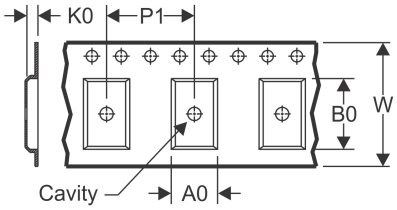

A0	Dimension designed to accommodate the component width
B0	Dimension designed to accommodate the component length
K0	Dimension designed to accommodate the component thickness
W	Overall width of the carrier tape
P1	Pitch between successive cavity centers

QUADRANT ASSIGNMENTS FOR PIN 1 ORIENTATION IN TAPE

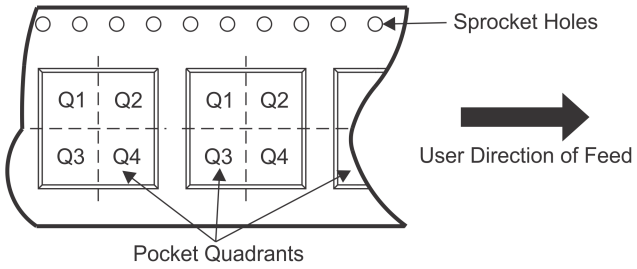

*All dimensions are nominal

Device	Package Type	Package Drawing	Pins	SPQ	Reel Diameter (mm)	Reel Width W1 (mm)	A0 (mm)	B0 (mm)	K0 (mm)	P1 (mm)	W (mm)	Pin1 Quadrant
MSP430F2001IPWR	TSSOP	PW	14	2000	330.0	12.4	6.9	5.6	1.6	8.0	12.0	Q1
MSP430F2001IRSAR	QFN	RSA	16	3000	330.0	12.4	4.25	4.25	1.15	8.0	12.0	Q2
MSP430F2001IRSAT	QFN	RSA	16	250	180.0	12.4	4.25	4.25	1.15	8.0	12.0	Q2
MSP430F2001TPWR	TSSOP	PW	14	2000	330.0	12.4	6.9	5.6	1.6	8.0	12.0	Q1
MSP430F2001TRSAR	QFN	RSA	16	3000	330.0	12.4	4.25	4.25	1.15	8.0	12.0	Q2
MSP430F2001TRSAT	QFN	RSA	16	250	180.0	12.4	4.25	4.25	1.15	8.0	12.0	Q2
MSP430F2002IPWR	TSSOP	PW	14	2000	330.0	12.4	6.9	5.6	1.6	8.0	12.0	Q1
MSP430F2002IRSAR	QFN	RSA	16	3000	330.0	12.4	4.25	4.25	1.15	8.0	12.0	Q2
MSP430F2002IRSAT	QFN	RSA	16	250	180.0	12.4	4.25	4.25	1.15	8.0	12.0	Q2
MSP430F2002TPWR	TSSOP	PW	14	2000	330.0	12.4	6.9	5.6	1.6	8.0	12.0	Q1
MSP430F2002TRSAR	QFN	RSA	16	3000	330.0	12.4	4.25	4.25	1.15	8.0	12.0	Q2
MSP430F2002TRSAT	QFN	RSA	16	250	180.0	12.4	4.25	4.25	1.15	8.0	12.0	Q2
MSP430F2003IPWR	TSSOP	PW	14	2000	330.0	12.4	6.9	5.6	1.6	8.0	12.0	Q1
MSP430F2003IRSAR	QFN	RSA	16	3000	330.0	12.4	4.25	4.25	1.15	8.0	12.0	Q2
MSP430F2003IRSAT	QFN	RSA	16	250	180.0	12.4	4.25	4.25	1.15	8.0	12.0	Q2
MSP430F2003TPWR	TSSOP	PW	14	2500	330.0	12.4	6.9	5.6	1.6	8.0	12.0	Q1
MSP430F2003TRSAR	QFN	RSA	16	3000	330.0	12.4	4.25	4.25	1.15	8.0	12.0	Q2
MSP430F2003TRSAT	QFN	RSA	16	250	180.0	12.4	4.25	4.25	1.15	8.0	12.0	Q2

Device	Package Type	Package Drawing	Pins	SPQ	Reel Diameter (mm)	Reel Width W1 (mm)	A0 (mm)	B0 (mm)	K0 (mm)	P1 (mm)	W (mm)	Pin1 Quadrant
MSP430F2011IPWR	TSSOP	PW	14	2000	330.0	12.4	6.9	5.6	1.6	8.0	12.0	Q1
MSP430F2011IRSAR	QFN	RSA	16	3000	330.0	12.4	4.25	4.25	1.15	8.0	12.0	Q2
MSP430F2011IRSAT	QFN	RSA	16	250	180.0	12.4	4.25	4.25	1.15	8.0	12.0	Q2
MSP430F2011TPWR	TSSOP	PW	14	2000	330.0	12.4	6.9	5.6	1.6	8.0	12.0	Q1
MSP430F2011TRSAR	QFN	RSA	16	3000	330.0	12.4	4.25	4.25	1.15	8.0	12.0	Q2
MSP430F2011TRSAT	QFN	RSA	16	250	180.0	12.4	4.25	4.25	1.15	8.0	12.0	Q2
MSP430F2012IPWR	TSSOP	PW	14	2000	330.0	12.4	6.9	5.6	1.6	8.0	12.0	Q1
MSP430F2012IRSAR	QFN	RSA	16	3000	330.0	12.4	4.25	4.25	1.15	8.0	12.0	Q2
MSP430F2012IRSAT	QFN	RSA	16	250	180.0	12.4	4.25	4.25	1.15	8.0	12.0	Q2
MSP430F2012TPWR	TSSOP	PW	14	2000	330.0	12.4	6.9	5.6	1.6	8.0	12.0	Q1
MSP430F2012TRSAR	QFN	RSA	16	3000	330.0	12.4	4.25	4.25	1.15	8.0	12.0	Q2
MSP430F2012TRSAT	QFN	RSA	16	250	180.0	12.4	4.25	4.25	1.15	8.0	12.0	Q2
MSP430F2013IPWR	TSSOP	PW	14	2000	330.0	12.4	6.9	5.6	1.6	8.0	12.0	Q1
MSP430F2013IRSAR	QFN	RSA	16	3000	330.0	12.4	4.25	4.25	1.15	8.0	12.0	Q2
MSP430F2013IRSAT	QFN	RSA	16	250	180.0	12.4	4.25	4.25	1.15	8.0	12.0	Q2
MSP430F2013TPWR	TSSOP	PW	14	2000	330.0	12.4	6.9	5.6	1.6	8.0	12.0	Q1
MSP430F2013TRSAR	QFN	RSA	16	3000	330.0	12.4	4.25	4.25	1.15	8.0	12.0	Q2
MSP430F2013TRSAT	QFN	RSA	16	250	180.0	12.4	4.25	4.25	1.15	8.0	12.0	Q2

TAPE AND REEL BOX DIMENSIONS

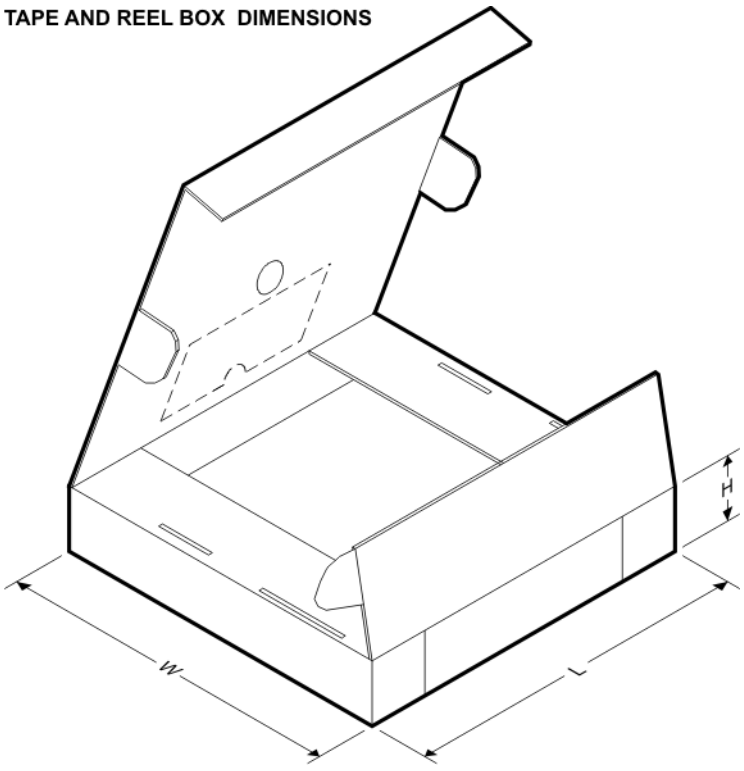

*All dimensions are nominal

Device	Package Type	Package Drawing	Pins	SPQ	Length (mm)	Width (mm)	Height (mm)
MSP430F2001IPWR	TSSOP	PW	14	2000	853.0	449.0	35.0
MSP430F2001IRSAR	QFN	RSA	16	3000	367.0	367.0	35.0
MSP430F2001IRSAT	QFN	RSA	16	250	210.0	185.0	35.0
MSP430F2001TPWR	TSSOP	PW	14	2000	853.0	449.0	35.0
MSP430F2001TRSAR	QFN	RSA	16	3000	367.0	367.0	35.0
MSP430F2001TRSAT	QFN	RSA	16	250	210.0	185.0	35.0
MSP430F2002IPWR	TSSOP	PW	14	2000	853.0	449.0	35.0
MSP430F2002IRSAR	QFN	RSA	16	3000	367.0	367.0	35.0
MSP430F2002IRSAT	QFN	RSA	16	250	210.0	185.0	35.0
MSP430F2002TPWR	TSSOP	PW	14	2000	853.0	449.0	35.0
MSP430F2002TRSAR	QFN	RSA	16	3000	367.0	367.0	35.0
MSP430F2002TRSAT	QFN	RSA	16	250	210.0	185.0	35.0
MSP430F2003IPWR	TSSOP	PW	14	2000	853.0	449.0	35.0
MSP430F2003IRSAR	QFN	RSA	16	3000	367.0	367.0	35.0
MSP430F2003IRSAT	QFN	RSA	16	250	210.0	185.0	35.0
MSP430F2003TPWR	TSSOP	PW	14	2500	853.0	449.0	35.0
MSP430F2003TRSAR	QFN	RSA	16	3000	367.0	367.0	35.0
MSP430F2003TRSAT	QFN	RSA	16	250	210.0	185.0	35.0
MSP430F2011IPWR	TSSOP	PW	14	2000	853.0	449.0	35.0
MSP430F2011IRSAR	QFN	RSA	16	3000	367.0	367.0	35.0
MSP430F2011IRSAT	QFN	RSA	16	250	210.0	185.0	35.0
MSP430F2011TPWR	TSSOP	PW	14	2000	853.0	449.0	35.0
MSP430F2011TRSAR	QFN	RSA	16	3000	367.0	367.0	35.0
MSP430F2011TRSAT	QFN	RSA	16	250	210.0	185.0	35.0
MSP430F2012IPWR	TSSOP	PW	14	2000	853.0	449.0	35.0
MSP430F2012IRSAR	QFN	RSA	16	3000	367.0	367.0	35.0
MSP430F2012IRSAT	QFN	RSA	16	250	210.0	185.0	35.0
MSP430F2012TPWR	TSSOP	PW	14	2000	853.0	449.0	35.0
MSP430F2012TRSAR	QFN	RSA	16	3000	367.0	367.0	35.0
MSP430F2012TRSAT	QFN	RSA	16	250	210.0	185.0	35.0
MSP430F2013IPWR	TSSOP	PW	14	2000	853.0	449.0	35.0
MSP430F2013IRSAR	QFN	RSA	16	3000	367.0	367.0	35.0
MSP430F2013IRSAT	QFN	RSA	16	250	210.0	185.0	35.0
MSP430F2013TPWR	TSSOP	PW	14	2000	853.0	449.0	35.0
MSP430F2013TRSAR	QFN	RSA	16	3000	367.0	367.0	35.0
MSP430F2013TRSAT	QFN	RSA	16	250	210.0	185.0	35.0

TUBE

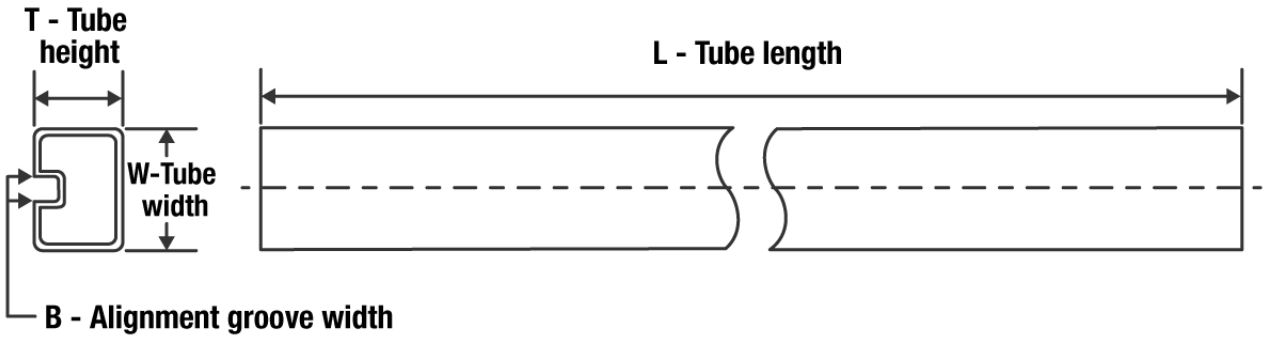

*All dimensions are nominal

Device	Package Name	Package Type	Pins	SPQ	L (mm)	W (mm)	T (µm)	B (mm)
MSP430F2001IN	N	PDIP	14	25	506	13.97	11230	4.32
MSP430F2001IPW	PW	TSSOP	14	90	530	10.2	3600	3.5
MSP430F2001IPW	PW	TSSOP	14	90	530	10.2	3600	3.5
MSP430F2001TN	N	PDIP	14	25	506	13.97	11230	4.32
MSP430F2001TPW	PW	TSSOP	14	90	530	10.2	3600	3.5
MSP430F2001TPW	PW	TSSOP	14	90	530	10.2	3600	3.5
MSP430F2002IN	N	PDIP	14	25	506	13.97	11230	4.32
MSP430F2002IPW	PW	TSSOP	14	90	530	10.2	3600	3.5
MSP430F2002IPW	PW	TSSOP	14	90	530	10.2	3600	3.5
MSP430F2002TN	N	PDIP	14	25	506	13.97	11230	4.32
MSP430F2002TPW	PW	TSSOP	14	90	530	10.2	3600	3.5
MSP430F2002TPW	PW	TSSOP	14	90	530	10.2	3600	3.5
MSP430F2003IN	N	PDIP	14	25	506	13.97	11230	4.32
MSP430F2003IPW	PW	TSSOP	14	90	530	10.2	3600	3.5
MSP430F2003IPW	PW	TSSOP	14	90	530	10.2	3600	3.5
MSP430F2003TN	N	PDIP	14	25	506	13.97	11230	4.32
MSP430F2003TPW	PW	TSSOP	14	90	530	10.2	3600	3.5
MSP430F2003TPW	PW	TSSOP	14	90	530	10.2	3600	3.5
MSP430F2011IN	N	PDIP	14	25	506	13.97	11230	4.32
MSP430F2011IPW	PW	TSSOP	14	90	530	10.2	3600	3.5
MSP430F2011IPW	PW	TSSOP	14	90	530	10.2	3600	3.5
MSP430F2011TN	N	PDIP	14	25	506	13.97	11230	4.32
MSP430F2011TPW	PW	TSSOP	14	90	530	10.2	3600	3.5
MSP430F2011TPW	PW	TSSOP	14	90	530	10.2	3600	3.5
MSP430F2012IN	N	PDIP	14	25	506	13.97	11230	4.32
MSP430F2012IPW	PW	TSSOP	14	90	530	10.2	3600	3.5
MSP430F2012IPW	PW	TSSOP	14	90	530	10.2	3600	3.5
MSP430F2012TN	N	PDIP	14	25	506	13.97	11230	4.32

Device	Package Name	Package Type	Pins	SPQ	L (mm)	W (mm)	T (µm)	B (mm)
MSP430F2012TPW	PW	TSSOP	14	90	530	10.2	3600	3.5
MSP430F2012TPW	PW	TSSOP	14	90	530	10.2	3600	3.5
MSP430F2013IN	N	PDIP	14	25	506	13.97	11230	4.32
MSP430F2013IPW	PW	TSSOP	14	90	530	10.2	3600	3.5
MSP430F2013IPW	PW	TSSOP	14	90	530	10.2	3600	3.5
MSP430F2013TN	N	PDIP	14	25	506	13.97	11230	4.32
MSP430F2013TPW	PW	TSSOP	14	90	530	10.2	3600	3.5
MSP430F2013TPW	PW	TSSOP	14	90	530	10.2	3600	3.5

PW (R–PDSO–G14) PLASTIC SMALL OUTLINE

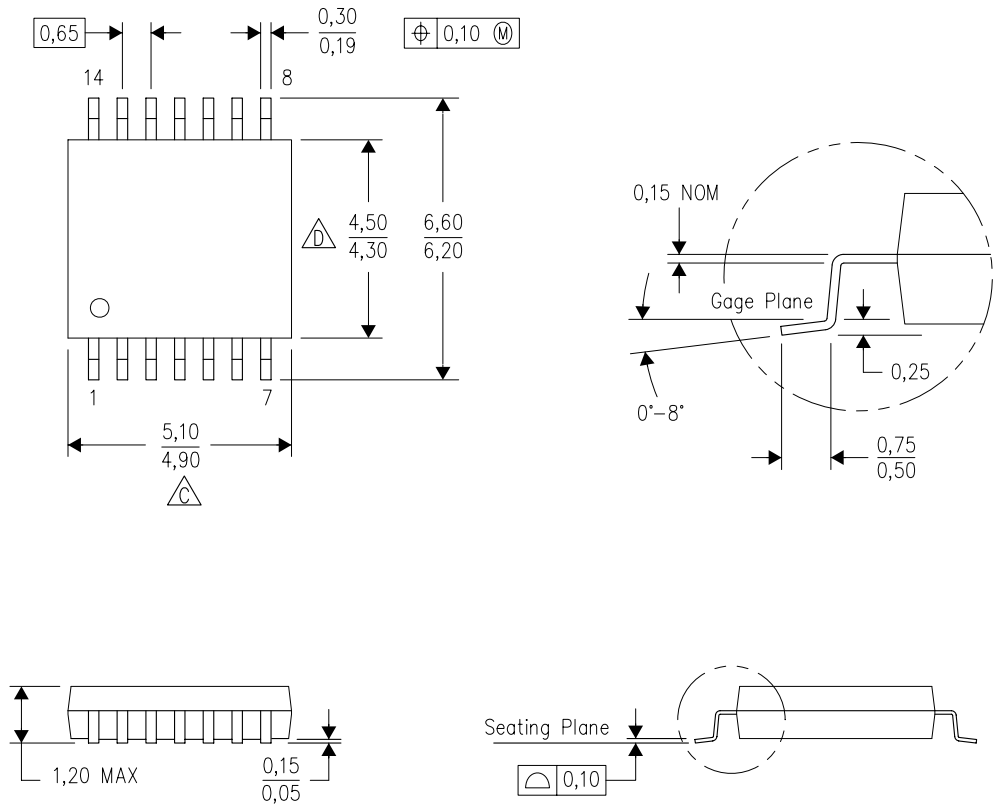

4040064–3/G 02/11

NOTES:
A. All linear dimensions are in millimeters. Dimensioning and tolerancing per ASME Y14.5M–1994.
B. This drawing is subject to change without notice.
C. Body length does not include mold flash, protrusions, or gate burrs. Mold flash, protrusions, or gate burrs shall not exceed 0,15 each side.
D. Body width does not include interlead flash. Interlead flash shall not exceed 0,25 each side.
E. Falls within JEDEC MO–153

PW (R–PDSO–G14) PLASTIC SMALL OUTLINE

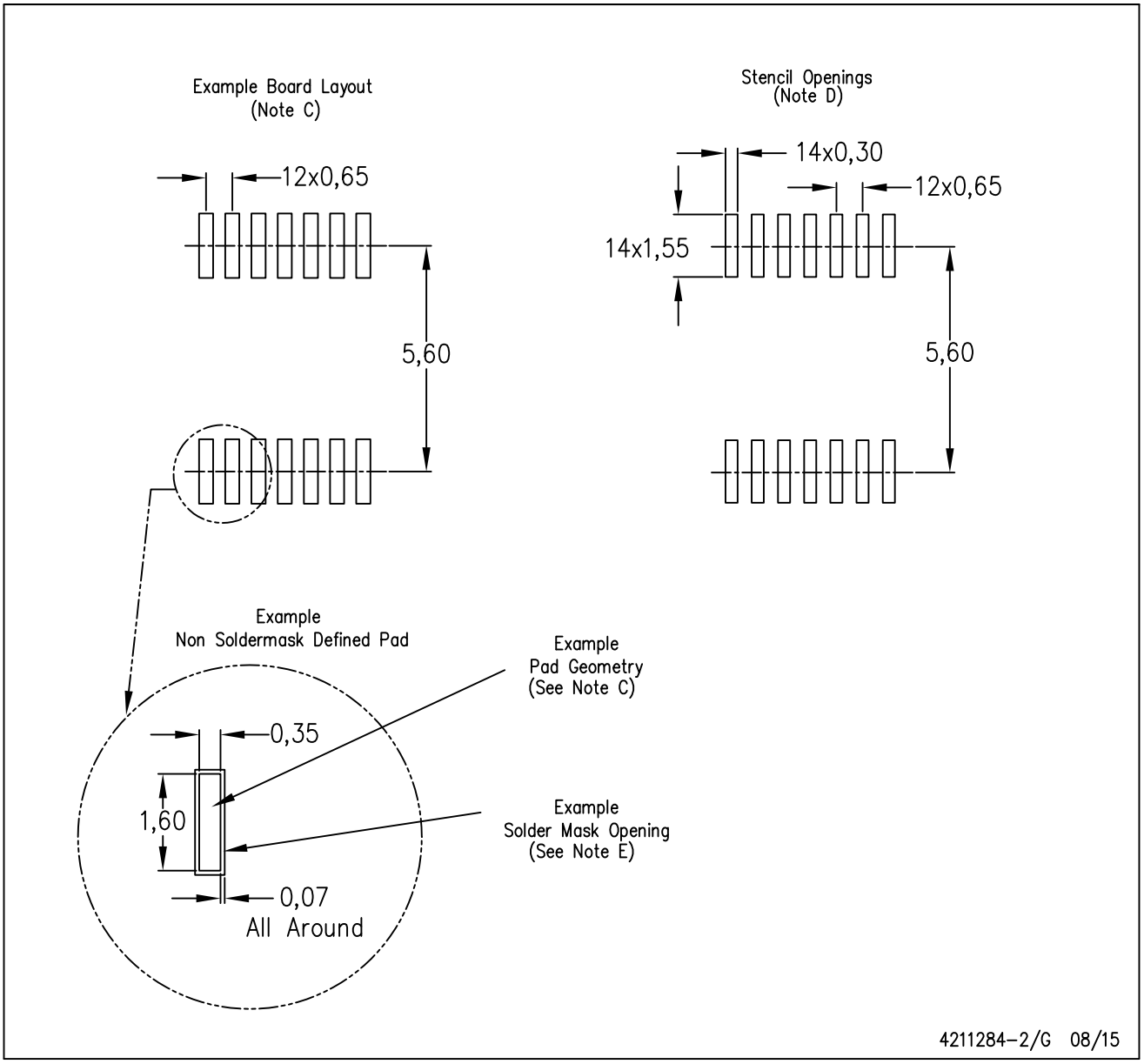

NOTES:
A. All linear dimensions are in millimeters.
B. This drawing is subject to change without notice.
C. Publication IPC–7351 is recommended for alternate designs.
D. Laser cutting apertures with trapezoidal walls and also rounding corners will offer better paste release. Customers should contact their board assembly site for stencil design recommendations. Refer to IPC–7525 for other stencil recommendations.
E. Customers should contact their board fabrication site for solder mask tolerances between and around signal pads.

N (R–PDIP–T**)

PLASTIC DUAL–IN–LINE PACKAGE

16 PINS SHOWN

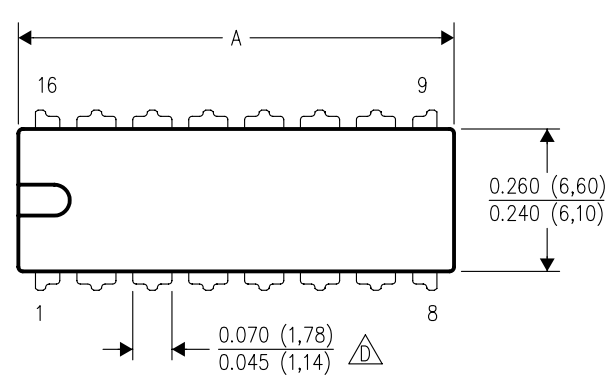

DIM \ PINS **	14	16	18	20
A MAX	0.775 (19,69)	0.775 (19,69)	0.920 (23,37)	1.060 (26,92)
A MIN	0.745 (18,92)	0.745 (18,92)	0.850 (21,59)	0.940 (23,88)
MS–001 VARIATION (C)	AA	BB	AC	AD

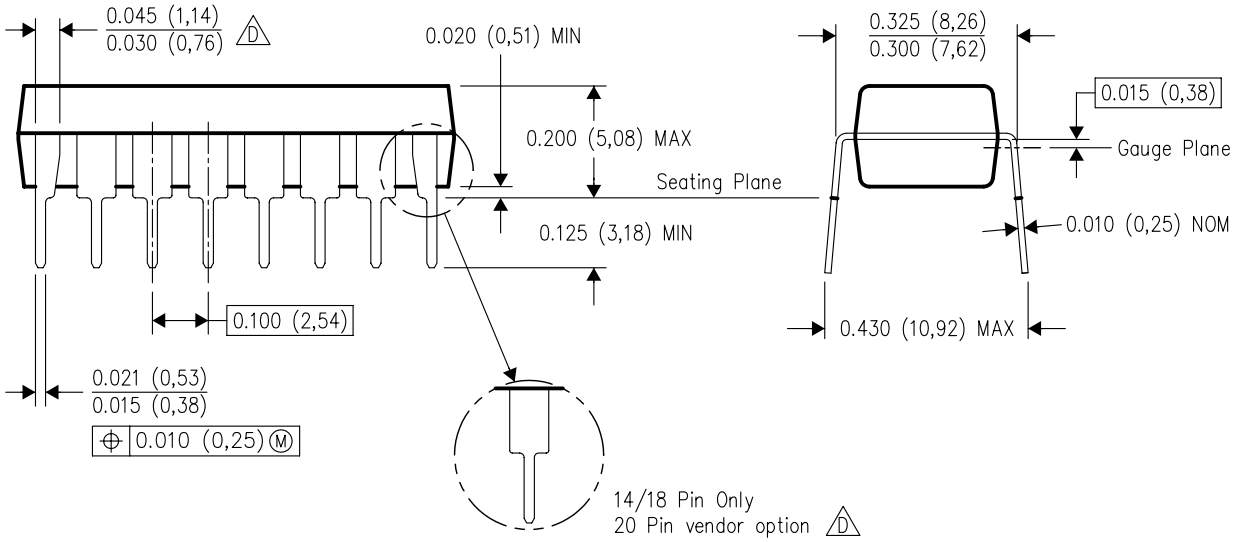

4040049/E 12/2002

NOTES:
A. All linear dimensions are in inches (millimeters).
B. This drawing is subject to change without notice.
C. Falls within JEDEC MS–001, except 18 and 20 pin minimum body length (Dim A).
D. The 20 pin end lead shoulder width is a vendor option, either half or full width.

RSA (S–PVQFN–N16) PLASTIC QUAD FLATPACK NO–LEAD

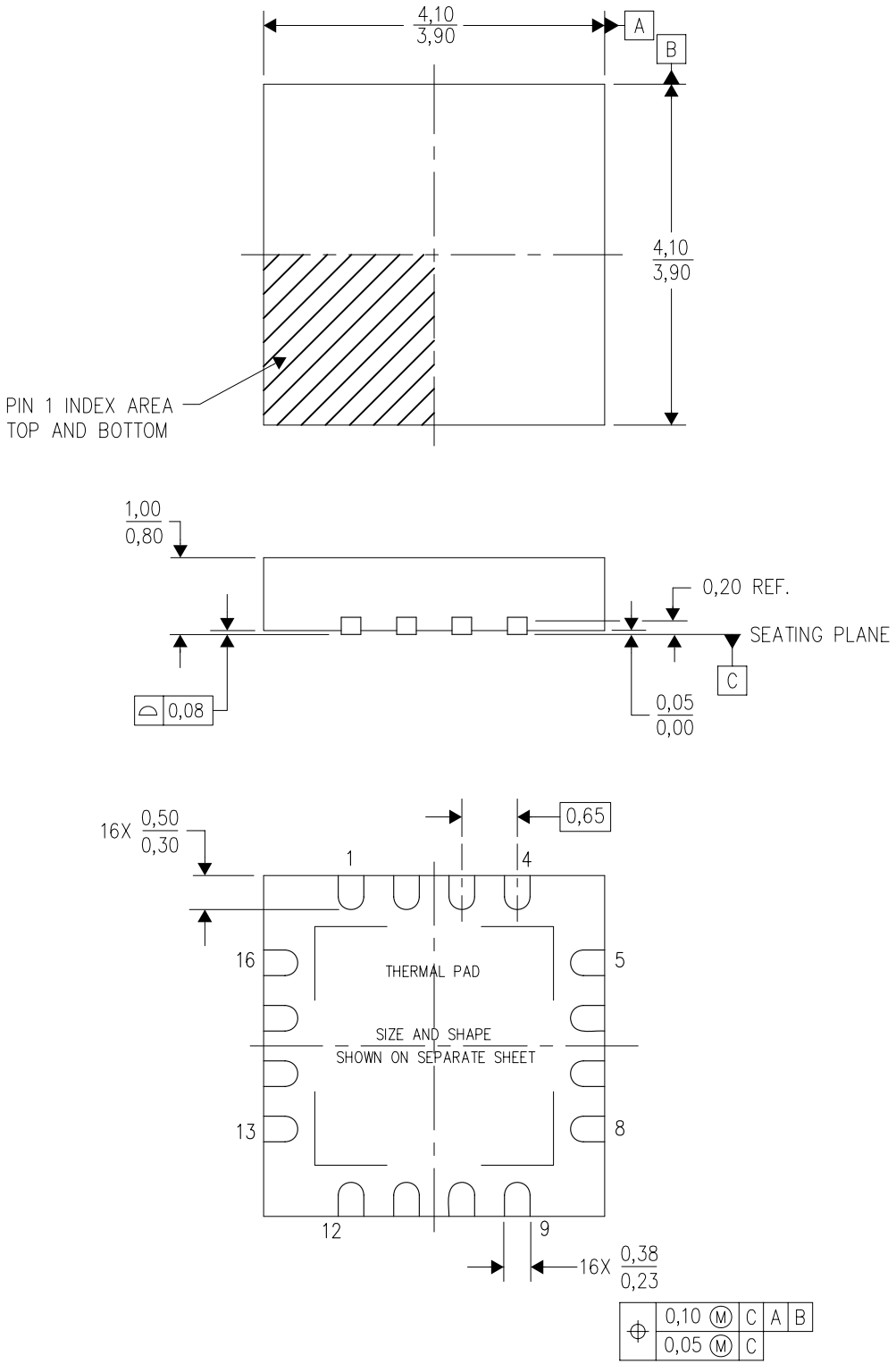

NOTES:
A. All linear dimensions are in millimeters. Dimensioning and tolerancing per ASME Y14.5M–1994.
B. This drawing is subject to change without notice.
C. Quad Flatpack, No–leads (QFN) package configuration.
D. The package thermal pad must be soldered to the board for thermal and mechanical performance.
E. See the additional figure in the Product Data Sheet for details regarding the exposed thermal pad features and dimensions.
F. Falls within JEDEC MO–220.

RSA (S–PVQFN–N16) PLASTIC QUAD FLATPACK NO–LEAD

THERMAL INFORMATION

This package incorporates an exposed thermal pad that is designed to be attached directly to an external heatsink. The thermal pad must be soldered directly to the printed circuit board (PCB). After soldering, the PCB can be used as a heatsink. In addition, through the use of thermal vias, the thermal pad can be attached directly to the appropriate copper plane shown in the electrical schematic for the device, or alternatively, can be attached to a special heatsink structure designed into the PCB. This design optimizes the heat transfer from the integrated circuit (IC).

For information on the Quad Flatpack No–Lead (QFN) package and its advantages, refer to Application Report, QFN/SON PCB Attachment, Texas Instruments Literature No. SLUA271. This document is available at www.ti.com.

The exposed thermal pad dimensions for this package are shown in the following illustration.

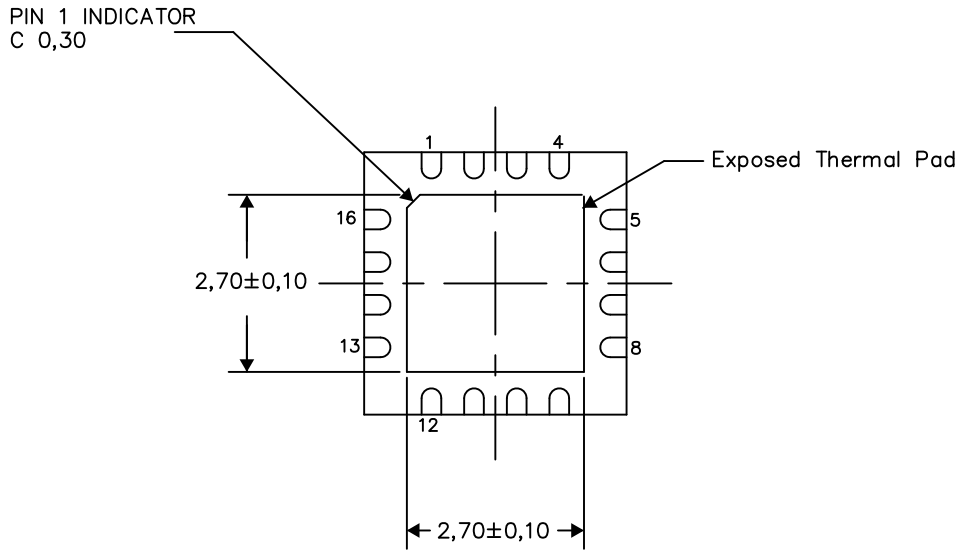

Bottom View

Exposed Thermal Pad Dimensions

4206364–2/0 09/15

NOTES:
A. All linear dimensions are in millimeters

RSA (S–PVQFN–N16) PLASTIC QUAD FLATPACK NO–LEAD

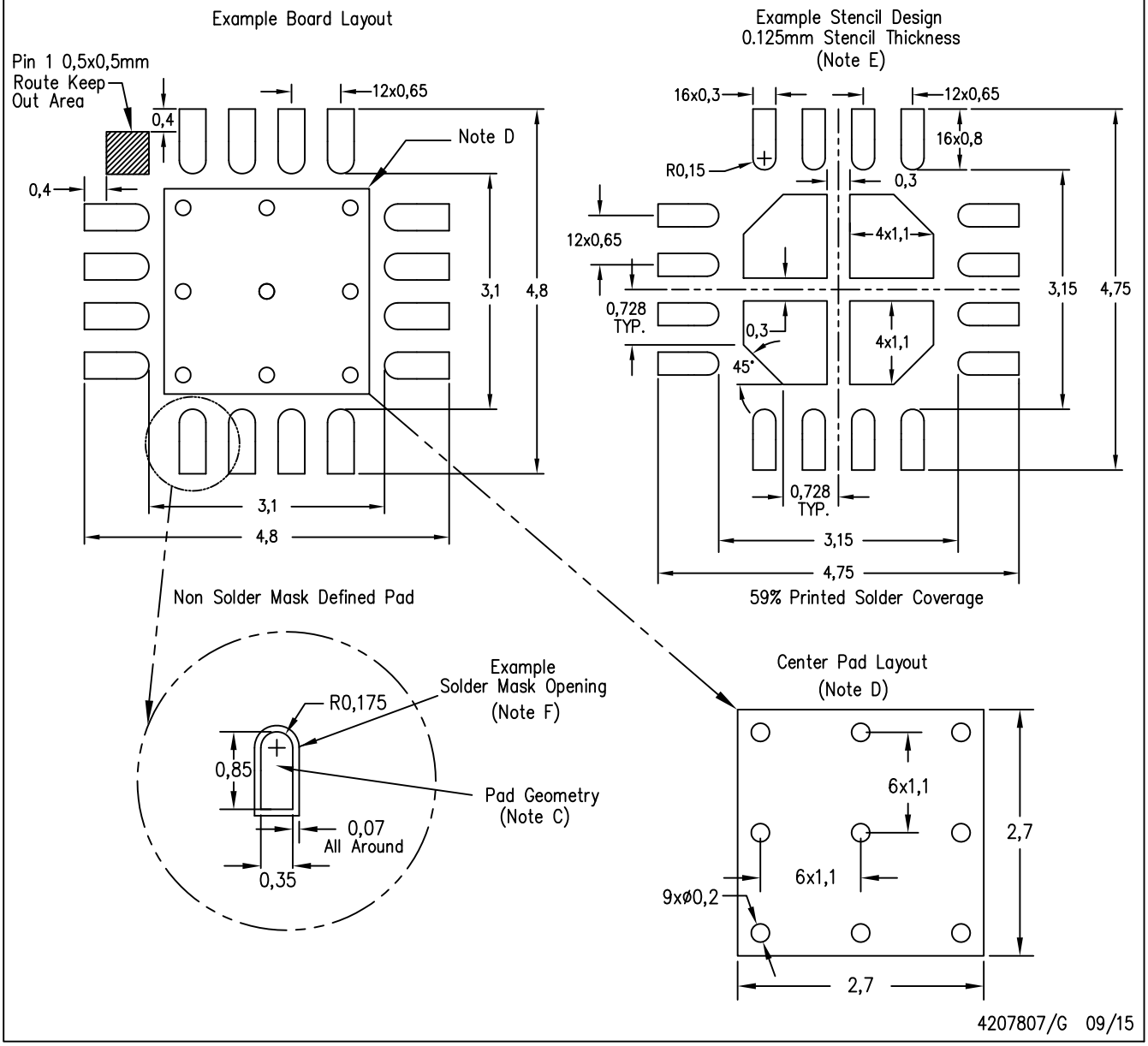

NOTES:
A. All linear dimensions are in millimeters.
B. This drawing is subject to change without notice.
C. Publication IPC–7351 is recommended for alternate designs.
D. This package is designed to be soldered to a thermal pad on the board. Refer to Application Note, QFN Packages, Texas Instruments Literature No. SLUA271, and also the Product Data Sheets for specific thermal information, via requirements, and recommended board layout. These documents are available at www.ti.com <http://www.ti.com>.
E. Laser cutting apertures with trapezoidal walls and also rounding corners will offer better paste release. Customers should contact their board assembly site for stencil design recommendations. Refer to IPC 7525 for stencil design considerations.
F. Customers should contact their board fabrication site for solder mask tolerances.

IMPORTANT NOTICE AND DISCLAIMER

TI PROVIDES TECHNICAL AND RELIABILITY DATA (INCLUDING DATA SHEETS), DESIGN RESOURCES (INCLUDING REFERENCE DESIGNS), APPLICATION OR OTHER DESIGN ADVICE, WEB TOOLS, SAFETY INFORMATION, AND OTHER RESOURCES “AS IS” AND WITH ALL FAULTS, AND DISCLAIMS ALL WARRANTIES, EXPRESS AND IMPLIED, INCLUDING WITHOUT LIMITATION ANY IMPLIED WARRANTIES OF MERCHANTABILITY, FITNESS FOR A PARTICULAR PURPOSE OR NON-INFRINGEMENT OF THIRD PARTY INTELLECTUAL PROPERTY RIGHTS.

These resources are intended for skilled developers designing with TI products. You are solely responsible for (1) selecting the appropriate TI products for your application, (2) designing, validating and testing your application, and (3) ensuring your application meets applicable standards, and any other safety, security, regulatory or other requirements.

These resources are subject to change without notice. TI grants you permission to use these resources only for development of an application that uses the TI products described in the resource. Other reproduction and display of these resources is prohibited. No license is granted to any other TI intellectual property right or to any third party intellectual property right. TI disclaims responsibility for, and you will fully indemnify TI and its representatives against, any claims, damages, costs, losses, and liabilities arising out of your use of these resources.

TI’s products are provided subject to TI’s Terms of Sale or other applicable terms available either on ti.com or provided in conjunction with such TI products. TI’s provision of these resources does not expand or otherwise alter TI’s applicable warranties or warranty disclaimers for TI products.

TI objects to and rejects any additional or different terms you may have proposed.

Mailing Address: Texas Instruments, Post Office Box 655303, Dallas, Texas 75265
Copyright © 2022, Texas Instruments Incorporated