TLC5973 3 通道，12位，脉宽调制 (PWM) 恒定电流发光二极管 (LED) 驱动器 具有单线制接口 (EasySet™)

1 特性

- 3 个恒定灌电流通道
- 电流处理能力：
  - 每通道 2mA 至 35mA (VCC ≤ 4.0V)
  - 每通道 2mA 至 50mA (VCC > 4.0V)
- 支持 PWM 的灰度 (GS) 控制：
  - 12 位（4096 步长）
- 单线制接口 (EasySet)
- 电源 (VCC) 电压范围：
  - 3V 至 6V
- OUT 引脚最大电压：最高 21V
- 集成型并联稳压器
- 数据传输最大速率：
  - 每秒位数 (bps)：3Mbps
- 内部 GS 时钟振荡器：12MHz（典型值）
- 显示重复率：2.9kHz（典型值）
- 输出延迟开关以防止涌入电流
- 不受限器件级联
- 运行温度：-40°C 至 85°C

2 应用范围

这款器件针对一类应用。 这款器件的主要应用是 RGB LED 灯簇显示屏。

3 说明

TLC5973 是一款易于使用，3 通道，50mA 恒定灌电流 LED 驱动器。 这个单线制，3Mbps 串行接口 (EasySet) 提供了一个最大限度减少配线成本的解决方案。 LED 驱动器提供 12 位脉宽调制 (PWM) 分辨率。 显示重复率使用一个集成型 12MHz 灰度 (GS) 时钟振荡器在 2.9kHz（典型值）上实现。 此驱动器还提供不受限级联功能。

所有输出恒定灌电流可由一个外部电阻器设定。 TLC5973 有一个可用于更高 VCC 电源电压应用的内部并联稳压器。

器件信息(1)

器件名称	封装	封装尺寸
TLC5973	小外形尺寸集成电路 (SOIC) (8)	4.9mm x 3.91mm

(1) 要了解所有可用封装，请见数据表末尾的可订购产品附录。

典型应用电路示例

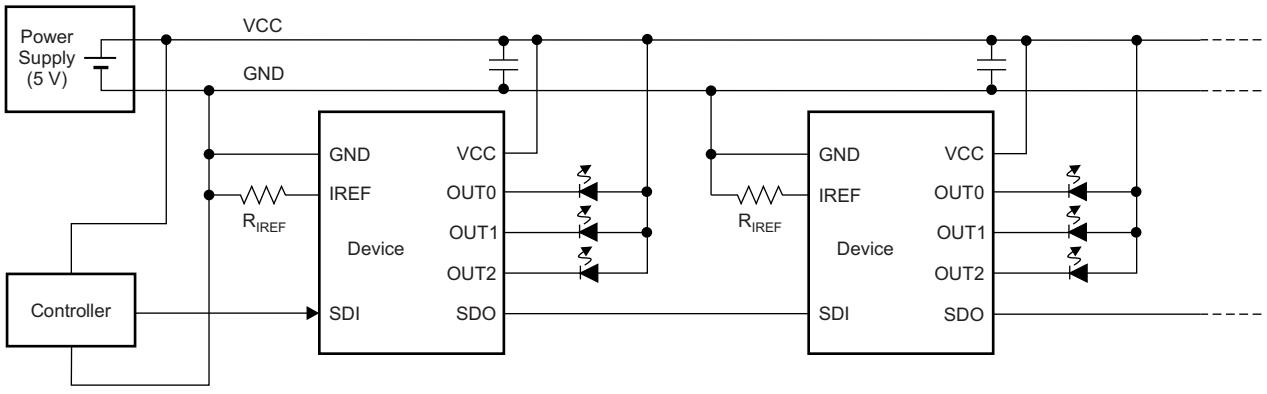

PRODUCTION DATA information is current as of publication date. Products conform to specifications per the terms of the Texas Instruments standard warranty. Production processing does not necessarily include testing of all parameters.

目录

1 特性 ... 1
2 应用范围 ... 1
3 说明 ... 1
4 修订历史记录 ... 2
5 **Pin Configuration and Functions** ... 3
6 **Specifications** ... 3
6.1 Absolute Maximum Ratings ... 3
6.2 Handling Ratings ... 3
6.3 Recommended Operating Conditions ... 4
6.4 Thermal Information ... 4
6.5 Electrical Characteristics ... 5
6.6 Switching Characteristics ... 6
6.7 Typical Characteristics ... 6
7 **Parameter Measurement Information** ... 7
7.1 Pin-Equivalent Input and Output Schematic Diagrams ... 7
7.2 Test Circuits ... 7
7.3 Timing Diagrams ... 8
8 **Detailed Description** ... 10
8.1 Overview ... 10
8.2 Functional Block Diagram ... 11
8.3 Feature Description ... 11
8.4 Device Functional Modes ... 13
8.5 Programming ... 19
8.6 Register Maps ... 21
9 **Applications and Implementation** ... 22
9.1 Application Information ... 22
9.2 Typical Applications ... 22
10 **Power Supply Recommendations** ... 28
11 **Layout** ... 28
11.1 Layout Guidelines ... 28
11.2 Layout Example ... 28
12 器件和文档支持 ... 29
12.1 Trademarks ... 29
12.2 Electrostatic Discharge Caution ... 29
12.3 Glossary ... 29
13 机械封装和可订购信息 ... 29

4 修订历史记录

Changes from Revision A (May 2013) to Revision B **Page**

- 已将格式更改为符合最新的数据表标准；已添加*应用范围*和*执行*，*电源建议*，和*布局布线*章节，已移动现有章节 ... 1
- 已将说明部分中的 *8 位脉宽调制* 更改为 *12 位脉宽调制* ... 1
- Changed t_{H0} and t_{H1} parameter units from µs to ns in Recommended Operating Conditions table ... 4
- Changed Figure 8: deleted top SDO, changed bottom SDO to OUT*n* ... 7
- Changed Figure 11: deleted extraneous breaks in traces, extraneous data call-outs, and t_{H1} on GSLAT trace, changed data transfer trace note to *Internal to 1st Device* and 1st Data to 47th Data in 48-Bit Shift Register LSB trace ... 9
- Changed functional block diagram: changed Upper 8 Bits to Upper 12 Bits on 48-Bit Shift Register block ... 11
- Added *Grayscale (GS) Control*, *EasySet and Shunt Regulator*, and *No Limit Cascading* sections ... 11
- Changed *Connector Design* title ... 13
- Changed Figure 13: changed OUT*n* traces GSDATA = 4093 and GSDATA = 4094 ... 15
- Changed description of the *Data '0' and Data '1' Write Sequence (Data Write Sequence)* section ... 16
- Changed title of *Controlling Devices Connected in Series* section ... 19
- Changed *Data 101* to *Data 1010* in Figure 18 ... 19
- Changed *eight MSBs* to *12 MSBs* in third sentence of the *Register and Data Latch Configuration* section ... 21
- Changed Figure 21: corrected 3AAh bit set sequence ... 21
- Changed Figure 26: changed number of LEDs in optional dashed box ... 26
- Changed Table 7: changed all values in R_{VCC} column and first and last values in *Resistor Wattage* column ... 27

Changes from Original (March 2013) to Revision A **Page**

- Changed second paragraph of *Grayscale (GS) Function (PWM Control)* section ... 13
- Changed t_{CYCLE} setting range in *Data Transfer Rate (t_{CYCLE}) Measurement Sequence* section ... 16
- Updated Figure 18 ... 19
- Updated Figure 21 and Table 3 ... 21

Copyright © 2013–2014, Texas Instruments Incorporated

5 Pin Configuration and Functions

D Package
SO-8
(Top View)

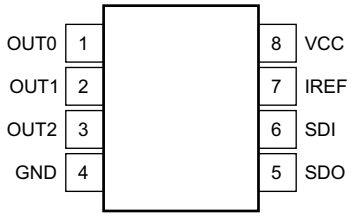

Pin Functions

PIN		I/O	DESCRIPTION
NAME	NO.		
OUT0	1	O	Constant sink current driver outputs. Multiple outputs can be configured in parallel to increase the sink drive current capability. Different voltages can be applied to each output.
OUT1	2	O	
OUT2	3	O	
GND	4	—	Power ground
SDO	5	O	Serial data output
SDI	6	I	Serial data input. This pin is internally pulled down to GND with a 1-MΩ (typ) resistor.
IREF	7	I/O	Output current programming pin. A resistor connected between IREF and GND sets the current for each constant-current output. Place the external resistor close to the device.
VCC	8	—	Power-supply voltage

6 Specifications

6.1 Absolute Maximum Ratings(1)

over operating free-air temperature range (unless otherwise noted)

			MIN	MAX	UNIT
Voltage(2)	Supply, V_{CC}	VCC	–0.3	7.0	V
	Input range, V_{IN}	SDI	–0.3	V_{CC} + 1.2	V
	Output range, V_{OUT}	OUT0 to OUT2	–0.3	21	V
		SDO	–0.3	7.0	V
Current	Output (dc), I_{OUT}	OUT0 to OUT2	0	60	mA
Operating junction temperature, T_J			–40	150	°C

(1) Stresses beyond those listed under *Absolute Maximum Ratings* may cause permanent damage to the device. These are stress ratings only, and functional operation of the device at these or any other conditions beyond those indicated under *Recommended Operating Conditions* is not implied. Exposure to absolute-maximum-rated conditions for extended periods my affect device reliability.
(2) All voltages are with respect to network ground pin.

6.2 Handling Ratings

			MIN	MAX	UNIT
T_{stg}	Storage temperature range		–55	150	°C
$V_{(ESD)}$	Electrostatic discharge	Human body model (HBM), per ANSI/ESDA/JEDEC JS-001, all pins(1)	–8000	8000	V
		Charged device model (CDM), per JEDEC specification JESD22-C101, all pins(2)	–2000	2000	

(1) JEDEC document JEP155 states that 500-V HBM allows safe manufacturing with a standard ESD control process.
(2) JEDEC document JEP157 states that 250-V CDM allows safe manufacturing with a standard ESD control process.

Copyright © 2013–2014, Texas Instruments Incorporated

6.3 Recommended Operating Conditions

PARAMETER		TEST CONDITIONS	MIN	NOM	MAX	UNIT
DC CHARACTERISTICS						
V_{CC}	Supply voltage	No internal shunt regulator mode	3.0	5.0	5.5	V
		Internal shunt regulator mode			6.0	V
V_O	Voltage applied to output	OUT0 to OUT2			21	V
V_{IH}	High-level input voltage	SDI	0.7 × V_{CC}		V_{CC}	V
V_{IL}	Low-level input voltage	SDI	GND		0.3 × V_{CC}	V
V_{IHYST}	Input voltage hysteresis	SDI		0.2 × V_{CC}		V
I_{OH}	High-level output current	SDO			–2	mA
I_{OL}	Low-level output current	SDO			2	mA
		OUT0 to OUT2 (VCC ≤ 4.0 V)	2		35	mA
		OUT0 to OUT2 (VCC > 4.0 V)	2		50	mA
I_{REG}	Shunt regulator sink current	VCC			20	mA
T_A	Operating free-air temperature range		–40		85	°C
T_J	Operating junction temperature range		–40		125	°C
AC CHARACTERISTICS						
$f_{CLK\ (SDI)}$	Data transfer rate	SDI	100		3000	kHz
t_{SDI}	SDI input pulse duration	SDI	60		0.5 / f_{CLK}	ns
t_{WH}	Pulse duration, high	SDI	14			ns
t_{WL}	Pulse duration, low	SDI	14			ns
t_{H0}	Hold time: end of sequence (EOS)	SDI↑ to SDI↑	3.5 / f_{CLK}		5.5 / f_{CLK}	ns
t_{H1}	Hold time: data latch (GSLAT)	SDI↑ to SDI↑	8 / f_{CLK}			ns

6.4 Thermal Information

THERMAL METRIC(1)		TLC5973 D (SO) 8 PINS	UNIT
$R_{\theta JA}$	Junction-to-ambient thermal resistance	134.6	°C/W
$R_{\theta JC(top)}$	Junction-to-case (top) thermal resistance	88.6	
$R_{\theta JB}$	Junction-to-board thermal resistance	75.3	
ψ_{JT}	Junction-to-top characterization parameter	37.7	
ψ_{JB}	Junction-to-board characterization parameter	74.8	
$R_{\theta JC(bot)}$	Junction-to-case (bottom) thermal resistance	N/A	

(1) For more information about traditional and new thermal metrics, see the *IC Package Thermal Metrics* application report, SPRA953.

Copyright © 2013–2014, Texas Instruments Incorporated

6.5 Electrical Characteristics

At T_A = –40°C to 85°C, V_{CC} = 3 V to 6.0 V, and C_{VCC} = 0.1 µF. Typical values at T_A = 25°C and V_{CC} = 5.0 V, unless otherwise noted.

PARAMETER		TEST CONDITIONS		MIN	TYP	MAX	UNIT
V_{OH}	High-level output voltage (SDO)	I_{OH} = –2 mA		V_{CC} – 0.4		V_{CC}	V
V_{OL}	Low-level output voltage (SDO)	I_{OL} = 2 mA		0		0.4	V
V_{IREF}	Reference voltage output	R_{IREF} = 1.5 kΩ		1.18	1.20	1.23	V
V_R	Shunt regulator output voltage (V_{CC})	I_{CC} = 1 mA, SDI = low			5.9		V
I_{CC0}	Supply current (V_{CC})	V_{CC} = 3.0 V to 5.5 V , SDI = low, all grayscale (GS*n*) = FFFh, V_{OUTn} = 1 V, SDO = 15 pF, R_{IREF} = 27 kΩ (I_{OUTn} = 2-mA target)			3	6	mA
I_{CC1}		V_{CC} = 3.0 V to 5.5 V, SDI = low, all grayscale (GS*n*) = FFFh, V_{OUTn} = 1 V, SDO = 15 pF, R_{IREF} = 3 kΩ (I_{OUTn} = 17-mA target)			4	7	mA
I_{CC2}		V_{CC} = 3.0 V to 5.5 V, SDI = 5 MHz, all grayscale (GS*n*) = FFFh, V_{OUTn} = 1 V, SDO = 15 pF, R_{IREF} = 3 kΩ (I_{OUTn} = 17-mA target)			5	8	mA
I_{CC3}		V_{CC} = 3.0 V to 5.5 V, SDI = 5 MHz, all grayscale (GS*n*) = FFFh, V_{OUTn} = 1 V, SDO = 15 pF, R_{IREF} = 1.5 kΩ (I_{OUTn} = 34-mA target)			5.5	10	mA
I_{OLC}	Constant output current (OUT0 to OUT2)	All OUT*n* = on, V_{OUTn} = 1 V, V_{OUTfix} = 1 V, R_{IREF} = 1.5 kΩ		31	34	37	mA
I_{OLKG}	Output leakage current (OUT0 to OUT2)	GS*n* = 000h, V_{OUTn} = 21 V	T_J = –40°C to 85°C			0.1	µA
			T_J = 85°C to 125°C			0.2	µA
ΔI_{OLC0}	Constant-current error (channel-to-channel)(1)	All OUT*n* = on, V_{OUTn} = V_{OUTfix} = 1 V, R_{IREF} = 1.5 kΩ			±0.5%	±3%	
ΔI_{OLC1}	Constant-current error (device-to-device)(2)	All OUT*n* = on, V_{OUTn} = V_{OUTfix} = 1 V, R_{IREF} = 1.5 kΩ			±0.5%	±6%	
ΔI_{OLC2}	Line regulation of constant-current output(3)	All OUT*n* = on, V_{OUTn} = V_{OUTfix} = 1 V, R_{IREF} = 1.5 kΩ			±0.5	±1	%/V
ΔI_{OLC3}	Load regulation of constant-current output(4)	All OUT*n* = on, V_{OUTn} = V_{OUTfix} = 1 V, R_{IREF} = 1.5 kΩ			±0.5	±1	%/V
R_{PD}	Internal pull-down resistance (SDI)	At SDI			1		MΩ

(1) The deviation of each output (OUT0 to OUT2) from the constant-current average. Deviation is calculated by the formula:

$$\Delta\,(\%) = \left(\frac{I_{OUTn}}{\frac{I_{OUT0} + I_{OUT1} + I_{OUT2}}{3}} - 1 \right) \times 100$$

, where n = 0 to 2.

(2) Deviation of the constant-current average in each color group from the ideal constant-current value. Deviation is calculated by the formula:

$$\Delta\,(\%) = \left(\frac{\frac{I_{OUT0} + I_{OUT1} + I_{OUT2}}{3} - \text{Ideal Output Current}}{\text{Ideal Output Current}} \right) \times 100$$

Ideal current is calculated by the formula:

$$I_{OUTn(IDEAL)}\,(\text{mA}) = 43.4 \times \left(\frac{1.20}{R_{IREF}\,(\Omega)} \right)$$

, where n = 0 to 2.

(3) Line regulation is calculated by the formula:

$$\Delta\,(\%/\text{V}) = \left(\frac{(I_{OUTn} \text{ at } V_{CC} = 5.5\text{ V}) - (I_{OUTn} \text{ at } V_{CC} = 3.0\text{ V})}{I_{OUTn} \text{ at } V_{CC} = 3.0\text{ V}} \right) \times \frac{100}{5.5\text{ V} - 3.0\text{ V}}$$

, where n = 0 to 2.

(4) Load regulation is calculated by the equation:

$$\Delta\,(\%/\text{V}) = \left(\frac{(I_{OUTn} \text{ at } V_{OUTn} = 3.0\text{ V}) - (I_{OUTn} \text{ at } V_{OUTn} = 1.0\text{ V})}{I_{OUTn} \text{ at } V_{OUTn} = 1.0\text{ V}} \right) \times \frac{100}{3.0\text{ V} - 1.0\text{ V}}$$

, where n = 0 to 2.

Copyright © 2013–2014, Texas Instruments Incorporated

6.6 Switching Characteristics

At T_A = –40°C to 85°C, V_{CC} = 3.0 V to 5.5 V, C_L = 15 pF, R_L = 110 Ω, and V_{LED} = 5.0 V, unless otherwise noted. Typical values are at T_A = 25°C and V_{CC} = 5.0 V.

PARAMETER		TEST CONDITIONS	MIN	TYP	MAX	UNIT
t_{R0}	Rise time	SDO	2	6	12	ns
t_{R1}		OUT*n* (on → off)		200	400	ns
t_{F0}	Fall time	SDO	2	6	12	ns
t_{F1}		OUT*n* (off → on)		200	400	ns
t_{D0}	Propagation delay	SDI↑ to SDO↑		30	50	ns
t_{D1}		OUT0↓ to OUT1↓, OUT1↓to OUT2↓, OUT0↑ to OUT1↑, OUT1↑to OUT2↑		25		ns
t_{WO}	Shift data output one pulse duration	SDO↑ to SDO↓	15	25	45	ns
f_{OSC}	Internal GS oscillator frequency		8	12	16	MHz

6.7 Typical Characteristics

At T_A = 25°C and V_{CC} = 12 V, unless otherwise noted.

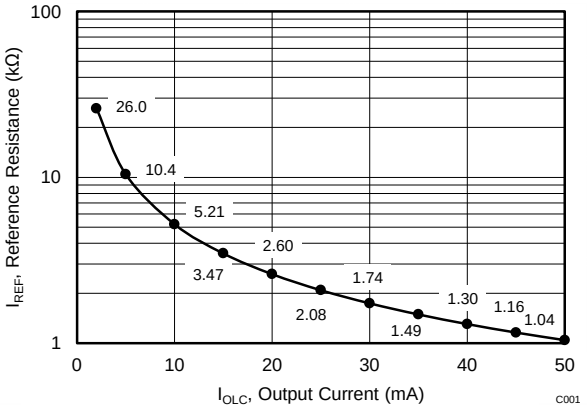

Figure 1. Reference Resistance vs Output Current (OUT*n*)

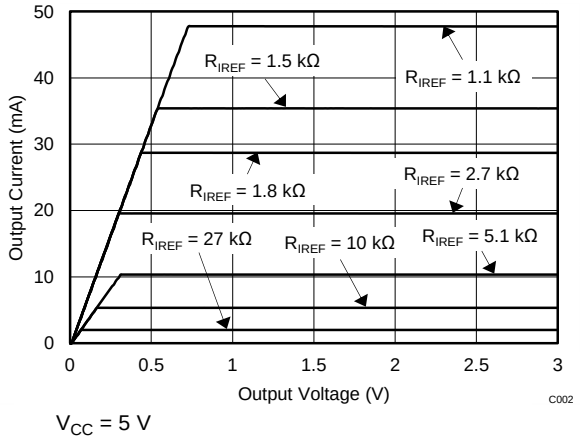

Figure 2. Output Current vs Output Voltage (OUT*n*)

Copyright © 2013–2014, Texas Instruments Incorporated

7 Parameter Measurement Information

7.1 Pin-Equivalent Input and Output Schematic Diagrams

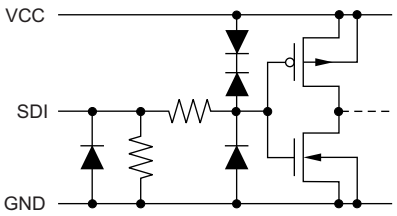

Figure 3. SDI

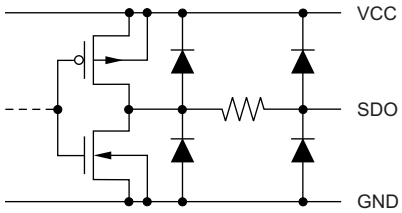

Figure 4. SDO

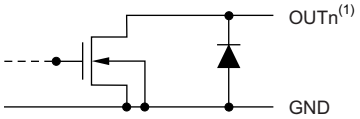

(1) n = 0 to 2.

Figure 5. OUT0 Through OUT2

7.2 Test Circuits

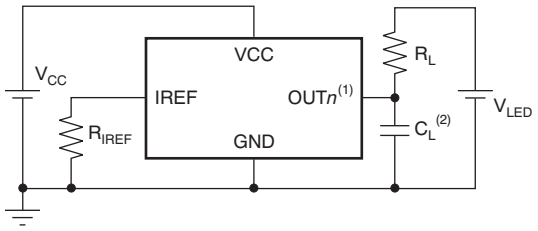

(1) n = 0 to 2.

(2) C_L includes measurement probe and jig capacitance.

Figure 6. Rise and Fall Time Test Circuit for OUT*n*

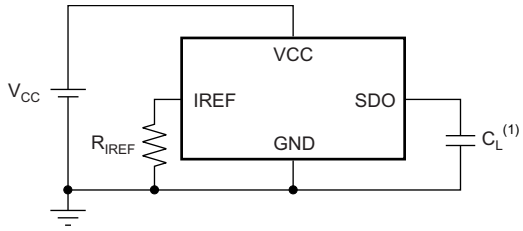

(1) C_L includes measurement probe and jig capacitance.

Figure 7. Rise and Fall Time Test Circuit for SDO

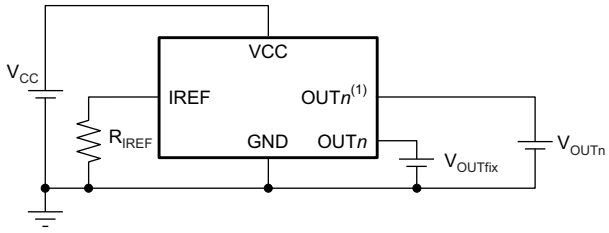

(1) n = 0 to 2.

Figure 8. Constant-Current Test Circuit for OUT*n*

7.3 Timing Diagrams

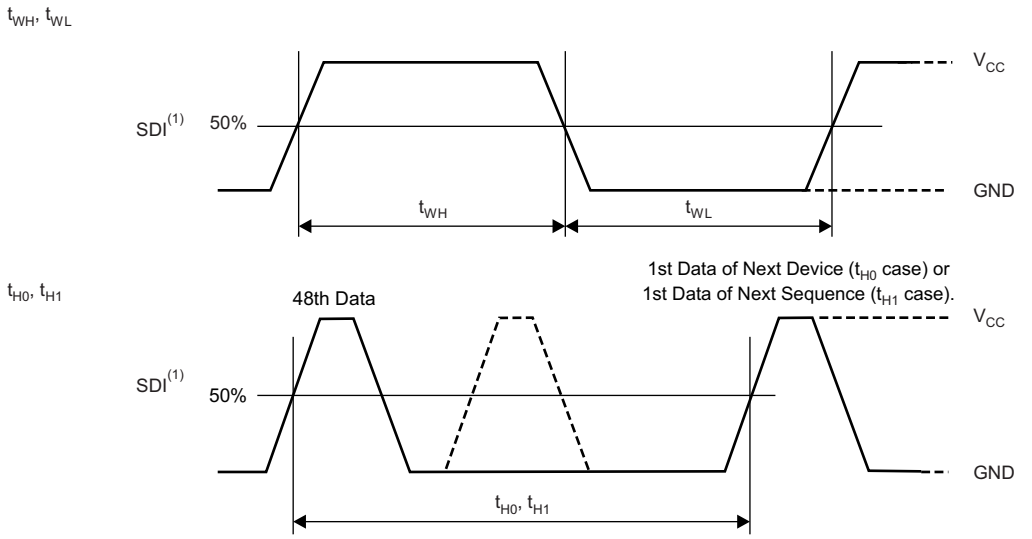

(1) Input pulse rise and fall time is 1 ns to 3 ns.

Figure 9. Input Timing

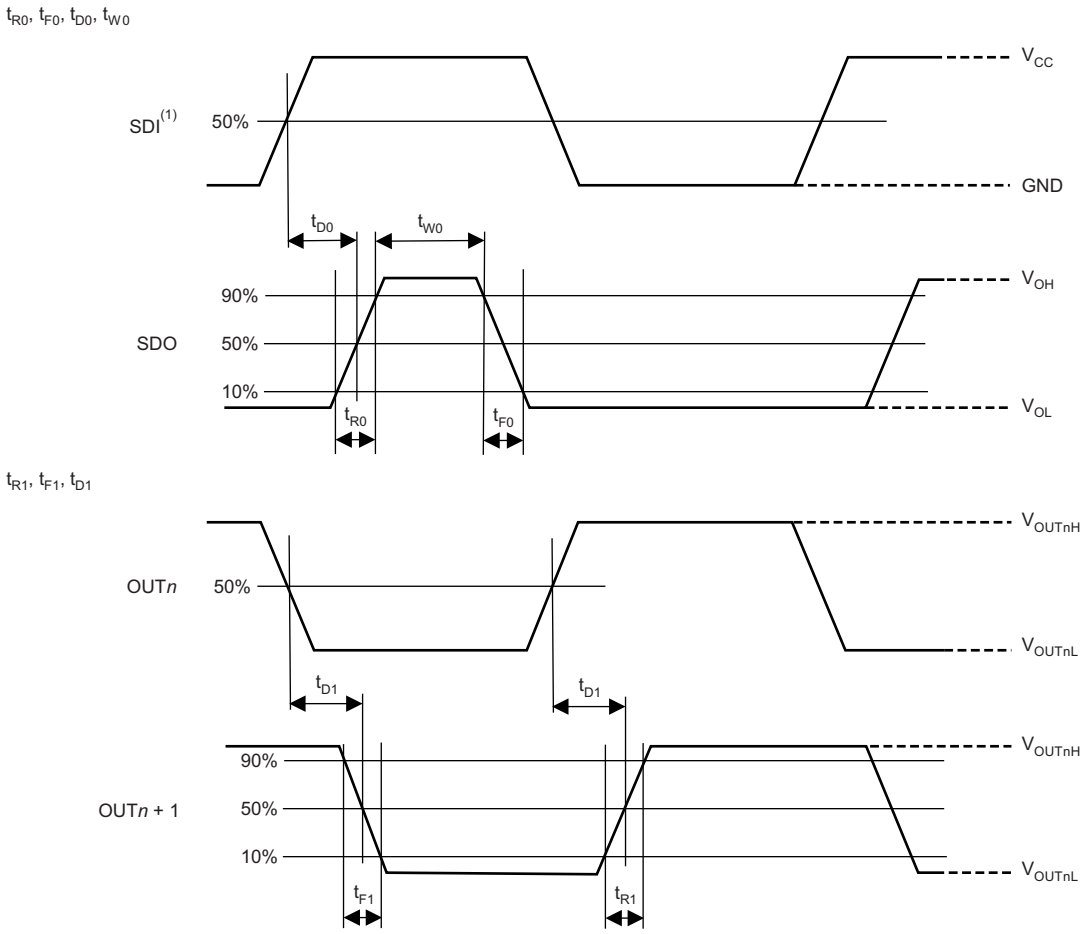

(1) Input pulse rise and fall time is 1 ns to 3 ns.

Figure 10. Output Timing

Copyright © 2013–2014, Texas Instruments Incorporated

Timing Diagrams (continued)

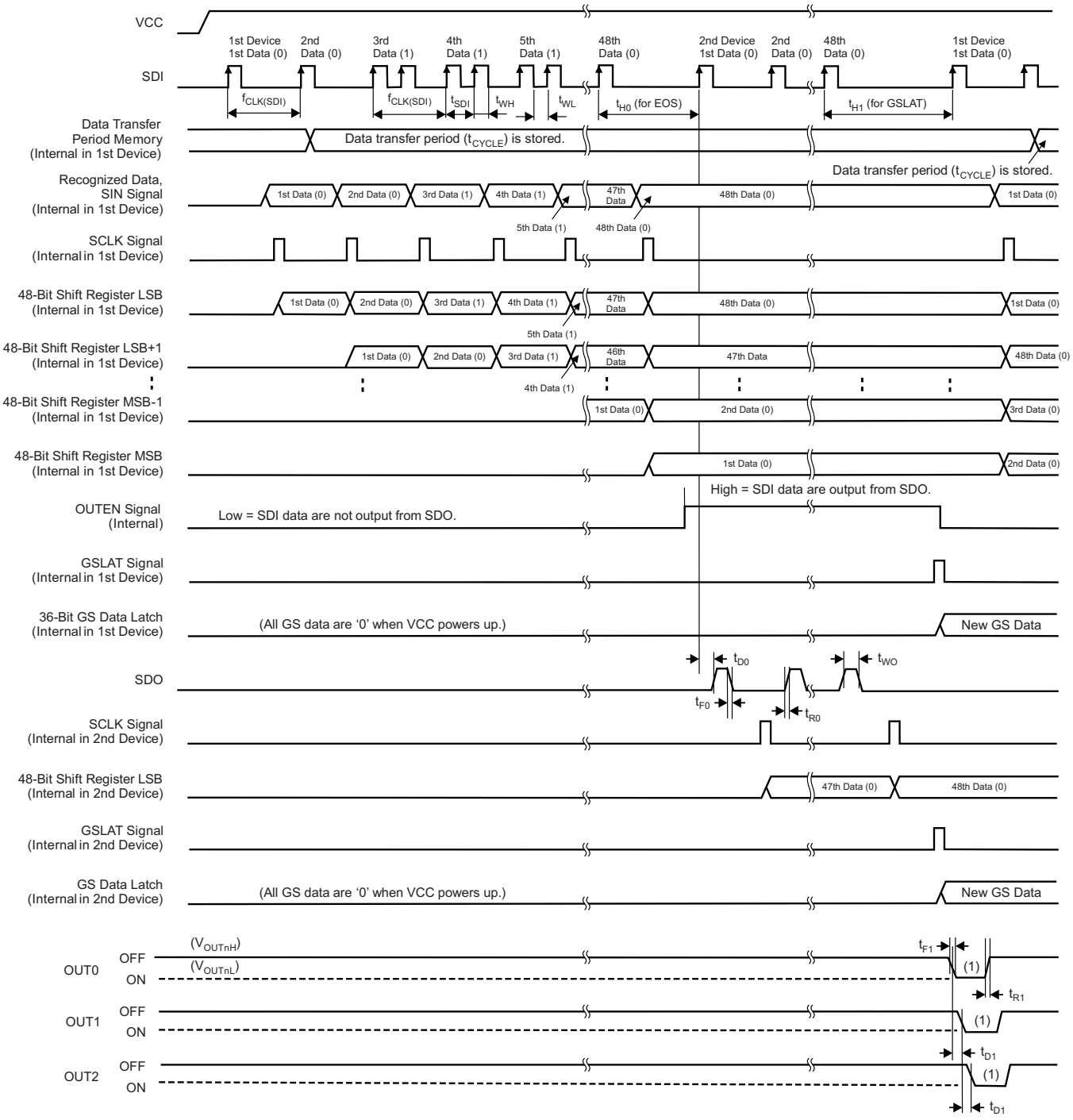

(1) OUT*n* on-time changes, depending on the data in the 36-bit GS data latch.

Figure 11. Data Write and OUT*n* Switching Timing

8 Detailed Description

8.1 Overview

The TLC5973 is 3-channel, 50-mA, constant-current LED driver that can control LED on-time with pulse width modulation (PWM) in 4096 steps for grayscale (GS) control. A maximum of 68 billion colors can be generated with red, green, and blue LEDs connected to each constant-current output. Furthermore, a reference clock generator is implemented in the device, which means that the reference clock for PWM timing control is not required to be supplied from an external clock generator or controller.

The device adopts a single-wire input or output system. Therefore, communication wire cost and communication wire failure are reduced. Further wire cost reduction can be attained when supplying power to the device. One wire can be eliminated because the device power can be generated from the LED power line with the internal shunt regulator.

The device can reduce the amount of incorrect data writes because the one-write command is required to write GS data to the device. The maximum data transfer rate for the device is 3 Mbps. Therefore, GS data can be updated with a high refresh rate even if many devices are connected in series. The number of TLC5973 devices connected in series is not limited because the TLC5973 has an internal buffer that drives the output signal.

Copyright © 2013–2014, Texas Instruments Incorporated

8.2 Functional Block Diagram

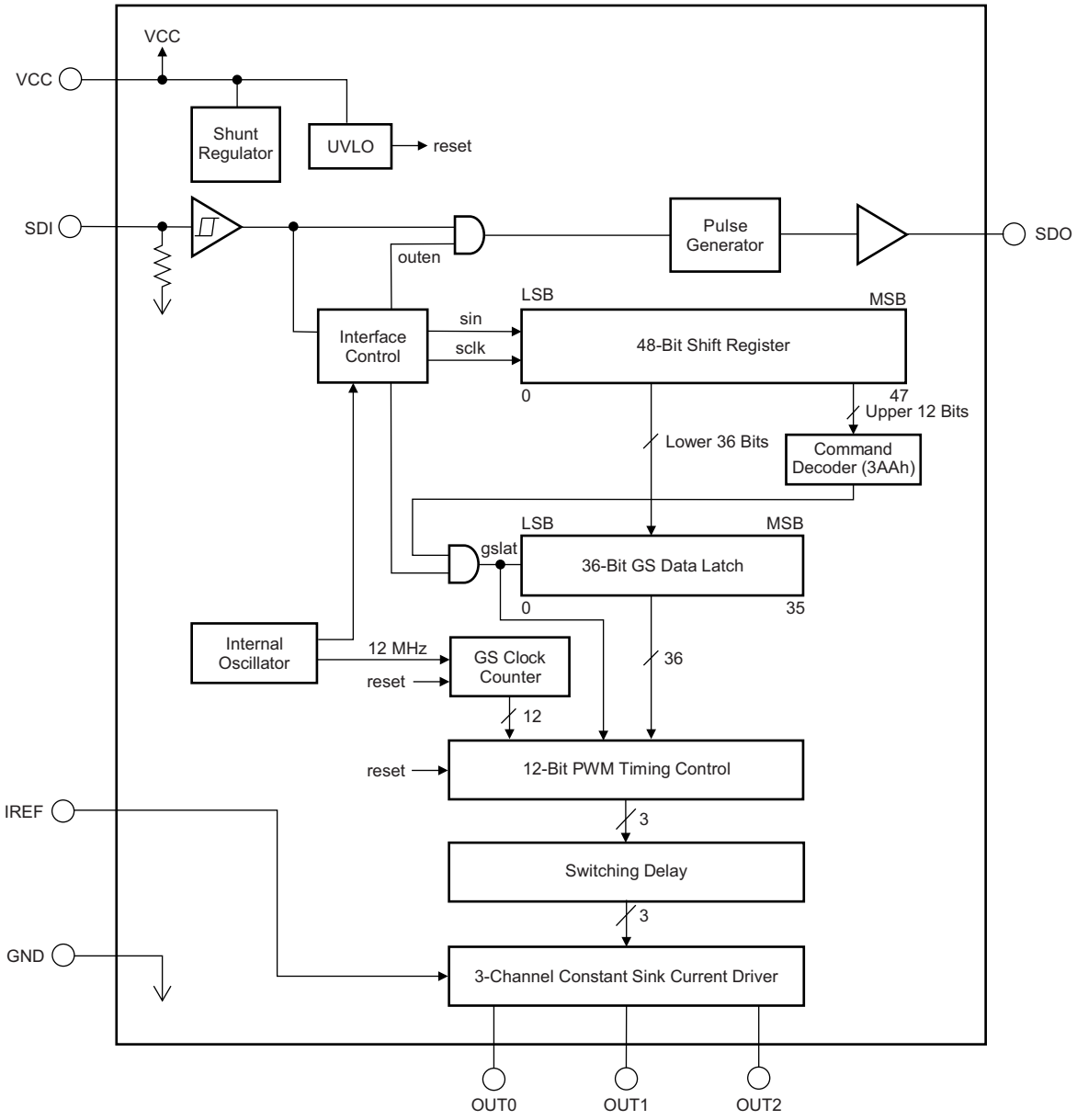

8.3 Feature Description

8.3.1 Grayscale (GS) Control

This control feature is a 12-bit (4096-step) grayscale (GS) control that provides a wide range of color generation. 68 billion colors can be generated with the red, green, and blue LEDs. Connect the LEDs to the device OUT*n* pins, as described in the *Applications and Implementation* section.

8.3.2 EasySet and Shunt Regulator

This device includes a single-wire serial interface (EasySet) and a shunt regulator. The total number of wires for power supply and data write operations can be reduced with the EasySet and shunt regulator included in the design.

Copyright © 2013–2014, Texas Instruments Incorporated

Feature Description (continued)

8.3.3 No Limit Cascading

This feature results in no limitation on the number of total cascaded devices used in series in an application. This advantage is attained because a timing-adjusted pulse generator is implemented in the device.

8.3.4 Constant Sink Current Value

The output current value of each channel (I_{OLC}) is programmed by a single resistor (R_{IREF}) that is placed between the IREF and GND pins. The current value can be calculated by Equation 1:

$$R_{IREF}\ (k\Omega) = \frac{V_{IREF}\ (V)}{I_{OLC}\ (mA)} \times 43.4 \quad (1)$$

where:

- V_{IREF} = the internal reference voltage on IREF (typically 1.20 V), and
- I_{OLC} = 2 mA to 50 mA

I_{OLC} is the current for each output. Each output sinks I_{OLC} current when it is turned on. R_{IREF} must be between 1 kΩ and 27 kΩ in order to hold I_{OLC} between 50 mA (typ) and 1.93 mA (typ). Otherwise, the output may be unstable. Refer to Figure 1 and Table 1 for the constant-current sink values for specific external resistor values.

Table 1. Constant-Current Output versus External Resistor Value

I_{OLC} (mA)	R_{IREF} (kΩ, typ)
50	1.04
45	1.16
40	1.30
35	1.49
30	1.74
25	2.08
20	2.60
15	3.47
10	5.21
5	10.4
2	26.0

Copyright © 2013–2014, Texas Instruments Incorporated

8.3.5 Connector Design

When the connector pin of the device application printed circuit board (PCB) is connected or disconnected to other PCBs, the power must be turned off to avoid device malfunction or failure. Furthermore, designing the connector GND pin to be longer than other pins (as shown in Figure 12) is preferable. This arrangement allows the GND line to either be connected first or disconnected last, which is imperative for proper device function.

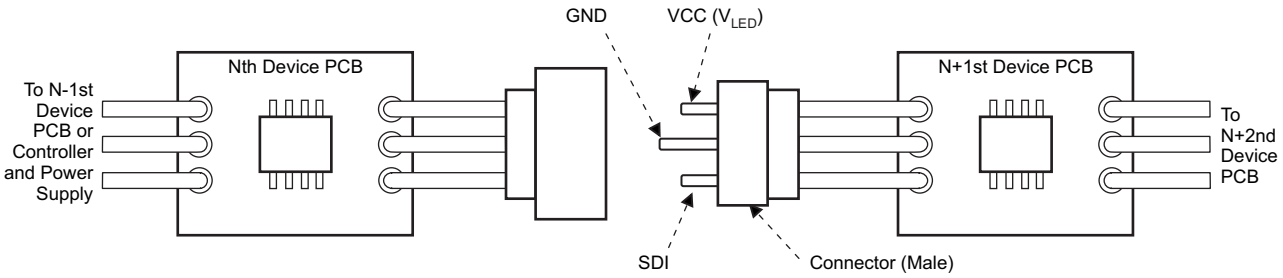

Figure 12. Connector Pin Design Application

8.4 Device Functional Modes

8.4.1 Grayscale (GS) Function (PWM Control)

The TLC5973 can adjust the brightness of each output channel using a pulse width modulation (PWM) control scheme. The PWM data bit length for each output is 12 bits. The architecture of 12 bits per channel results in 4096 brightness steps, from 0% to 99.98% on-time duty cycle.

The PWM operation for OUT*n* is controlled by an 12-bit grayscale (GS) counter. The GS counter increments on each internal GS clock (GSCLK) rising edge. All OUT*n* are turned on when the GS counter is '1', except when OUT*n* are programed to GS data '0' in the 36-bit GS data latch. After turning on, each output is turns off when the GS counter value exceeds the programmed GS data for the output. The GS counter resets to 000h and all outputs are forced off when the GS data are written to the 36-bit GS data latch. Afterwards, the GS counter begins incrementing and PWM control is started from the next internal GS clock.

Copyright © 2013–2014, Texas Instruments Incorporated

Device Functional Modes (continued)

Table 2 summarizes the GS data values versus the output ideal on-time duty cycle. Furthermore, actual on-time differs from the ideal on-time because the output drivers and control circuit have some timing delay. When the device is powered on, all outputs are forced off and remain off until the non-zero GS data are written to the 36-bit GS data latch.

Table 2. Output Duty Cycle and Total On-Time versus GS Data

GS DATA		NO. OF GSCLKs OUT*n* TURNS ON	NO. OF GSCLKs OUT*n* TURNS OFF	TOTAL IDEAL TIME (µs)	ON-TIME DUTY (%)
DECIMAL	HEX				
0	0	Off	Off	0	0
1	1	1	2	0.08	0.02
2	2	1	3	0.17	0.05
—	—	—	—	—	—
255	0FE	1	256	21.25	6.23
256	0FF	1	257	21.33	6.25
257	100	1	258	21.42	6.27
—	—	—	—	—	—
511	1FF	1	512	42.58	12.48
512	200	1	513	42.67	12.50
513	201	1	514	42.75	12.52
—	—	—	—	—	—
1023	3FF	1	1024	85.25	24.98
1024	400	1	1025	85.33	25.00
1025	401	1	1026	85.42	25.00
—	—	—	—	—	—
2047	7FF	1	2048	170.6	49.98
2048	800	1	2049	170.7	50.00
2049	801	1	2050	170.8	50.02
—	—	—	—	—	—
4093	FFD	1	4094	341.1	99.93
4094	FFE	1	4095	341.2	99.95
4095	FFF	1	4096	341.3	99.98

Copyright © 2013–2014, Texas Instruments Incorporated

8.4.1.1 PWM Control

The GS counter keeps track of the number of grayscale reference clocks (GSCLKs) from the internal oscillator. Each output stays on while the counter is less than or equal to the programmed GS value. Each output turns off when the GS counter is greater than the GS value in the 36-bit GS data latch. Figure 13 illustrates the PWM operation timing.

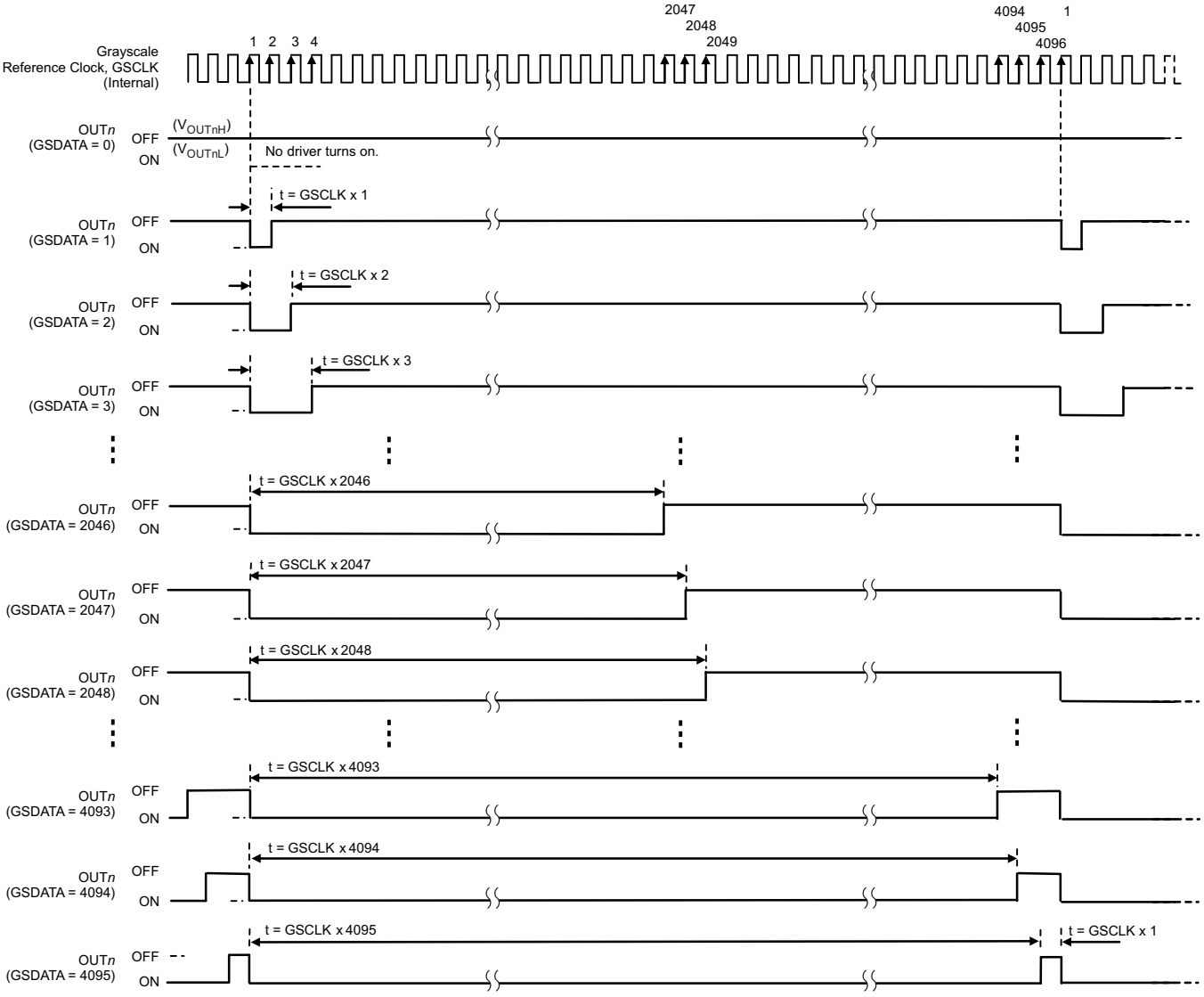

(1) Actual on-time differs from the ideal on-time.

Figure 13. PWM Operation

8.4.2 One-Wire Interface (EasySet) Data Writing Method

There are four sequences to write GS data into the TLC5973 via a single-wire interface. This section discusses each sequence in detail.

8.4.2.1 Data Transfer Rate (t_{CYCLE}) Measurement Sequence

The TLC5973 measures the time between the first and second SDI rising edges either after the device is powered up or when the GS data latch sequence is executed (as described in the *GS Data Latch Sequence (GSLAT)* section) and the time is internally stored as t_{CYCLE}. t_{CYCLE} serves as a base time used to recognize one complete data write operation, a 48-bit data write operation, and a GS data write operation to the GS data latch. t_{CYCLE} can be set between 0.33 µs and 10 µs ($f_{CLK(SDI)}$ = 100 kHz to 3000 kHz). In this sequence, two instances of data '0' are written to the LSB side of the 48-bit shift register. Figure 14 shows the t_{CYCLE} measurement timing.

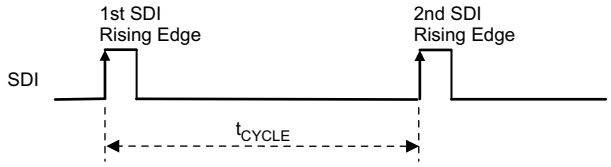

Figure 14. Data Transfer Rate (t_{CYCLE}) Measurement

8.4.2.2 Data '0' and Data '1' Write Sequence (Data Write Sequence)

When the second SDI rising edge is not input before 0.9 × t_{CYCLE} elapses from the first SDI rising edge input, the data are recognized as '0'. When the second SDI rising edge is input before 50% of t_{CYCLE} elapses from the first SDI rising edge input, the data are recognized as '1'. This write sequence must be repeated 46 times after the t_{CYCLE} measurement sequence in order to send the write command to the higher 10-bit (3AAh) and 36-bit GS data. Figure 15 shows the data '0' and '1' write timing.

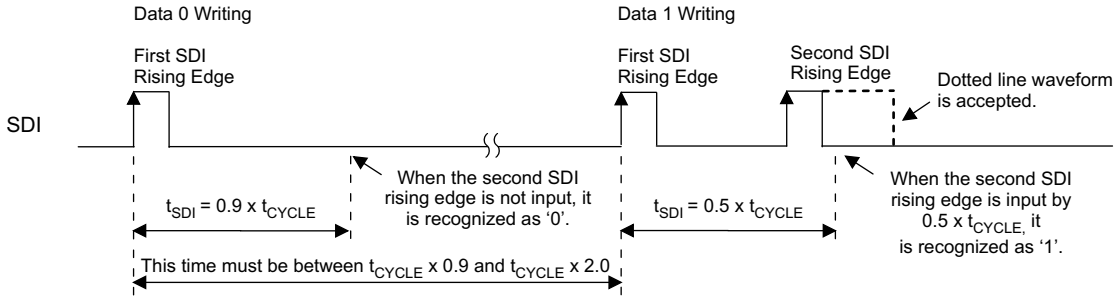

Figure 15. Data '0' and '1' Write Operation

Copyright © 2013–2014, Texas Instruments Incorporated

8.4.2.3 One Communication Cycle End of Sequence (EOS)

One communication cycle end of sequence (EOS) must be input after the 48-bit data are written because the TLC5973 does not count the number of input data. When SDI is held low for the EOS hold time (t_{H0}), the 48-bit shift register values are locked and a buffered SDI signal is output from SDO to transfer GS data to the next device. Figure 16 shows the EOS timing.

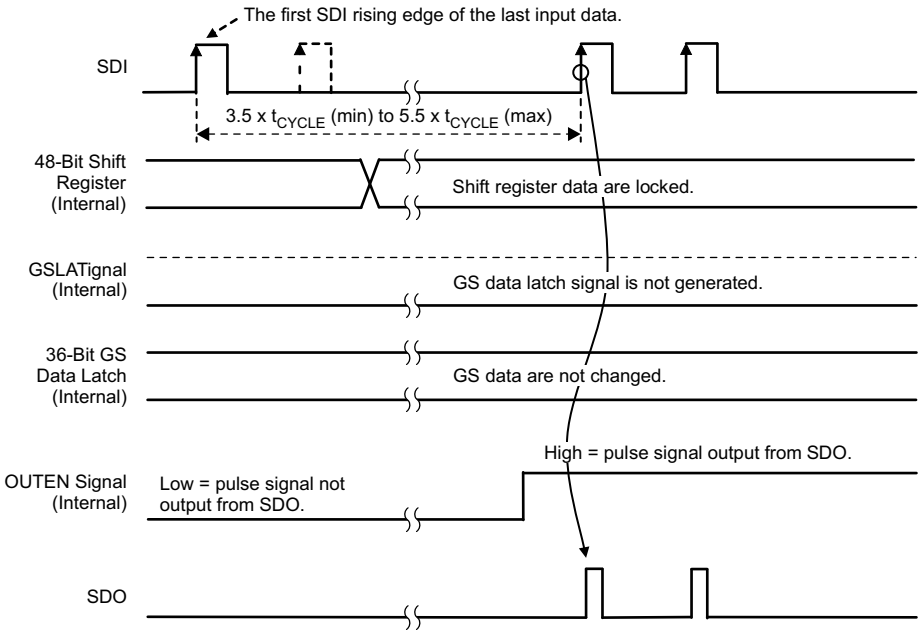

Figure 16. End of Sequence (EOS)

8.4.2.4 GS Data Latch (GSLAT) Sequence

A GS data latch (GSLAT) sequence must be input after the 48-bit data for all cascaded devices are written. When SDI is held low for the data latch hold time (t_{H1}), the 48-bit shift register data in all devices are copied to the GS data latch in each device. Furthermore, PWM control starts with the new GS data at the same time. Figure 17 shows the GSLAT timing.

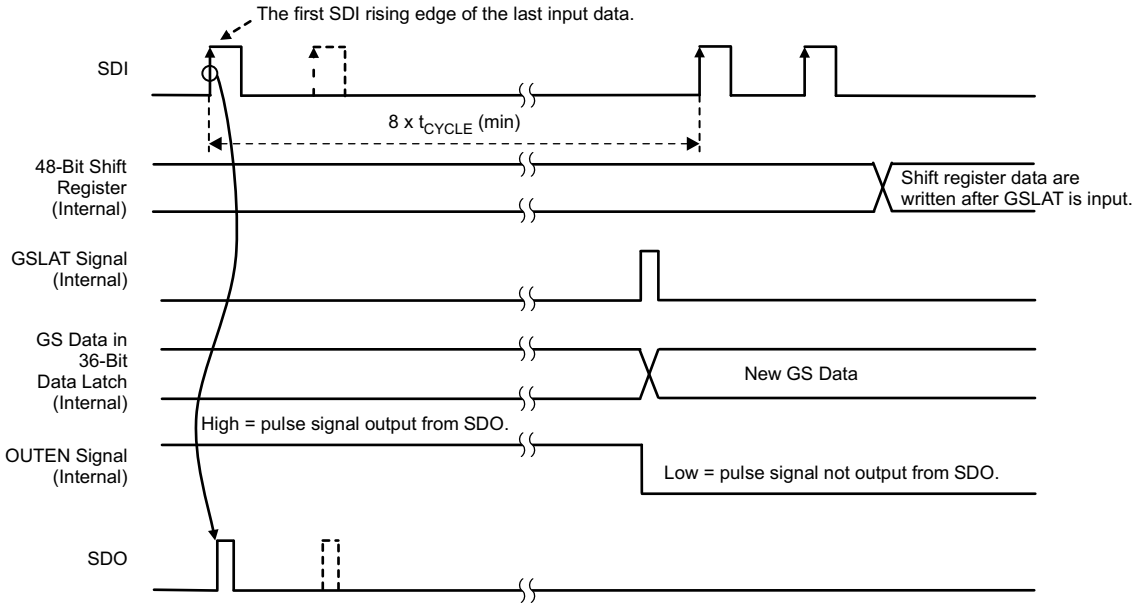

Figure 17. GS Data Latch Sequence (GSLAT)

Copyright © 2013–2014, Texas Instruments Incorporated

8.5 Programming

8.5.1 Controlling Devices Connected in Series

The 12-bit write command and 36-bit grayscale (GS) data for OUT0 to OUT2 (for a total of 48 bits of data) must be written to the device. Figure 18 shows the 48-bit data packet configuration. When multiple devices are cascaded (as shown in Figure 19), *N* times the packet must be written into each TLC5973 in order to control all devices. There is no limit on how many devices can be cascaded, as long as proper VCC voltage is supplied. The packet for all devices must be written again whenever any GS data changes.

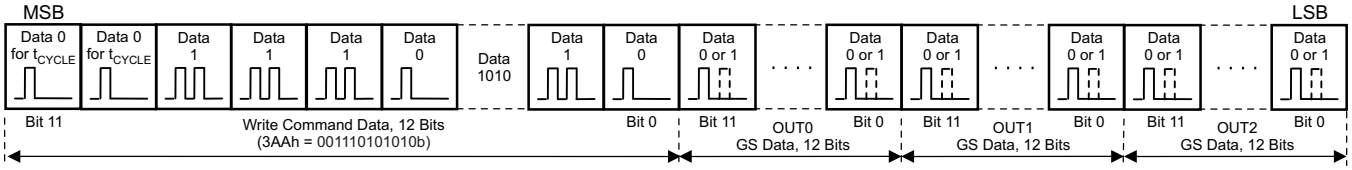

Figure 18. 48-Bit Data Packet Configuration for One TLC5973

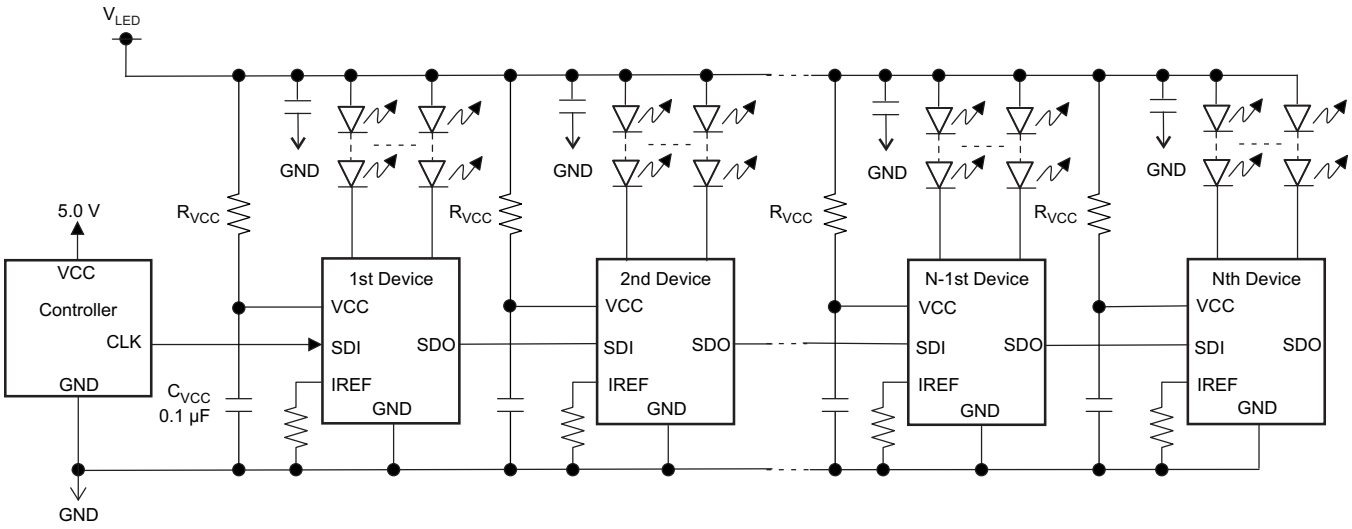

Figure 19. Cascade Connection of *N* TLC5973 Units (Internal Shunt Regulator Mode)

Copyright © 2013–2014, Texas Instruments Incorporated

Programming (continued)

The function setting write procedure and display control is:

1. Power-up VCC (V_{LED}); all OUT*n* are off because GS data are not written yet.
2. Write the 48-bit data packet (MSB-first) for the first device using t_{CYCLE} and the data write sequences illustrated in Figure 14 and Figure 15. The first 12 bits of the 48-bit data packet are used as the write command. The write command must be 3AAh (001110101010b); otherwise, the 36-bit GS data in the 48-bit shift register are not copied to the 36-bit GS data latch.
3. Execute one communication cycle EOS (refer to Figure 16) for the first device.
4. Write the 48-bit data packet for the second TLC5973 as described step 2. However, t_{CYCLE} should be set to the same timing as the first device.
5. Execute one communication cycle EOS for the second device.
6. Repeat steps 4 and 5 until all devices have GS data.
7. The number of total bits is 48 × *N*. After all data are written, execute a GSLAT sequence as described in Figure 17 in order to copy the 36-bit LSBs in the 48-bit shift resister to the 36-bit GS data latch in each device; PWM control starts with the written GS data at the same time.

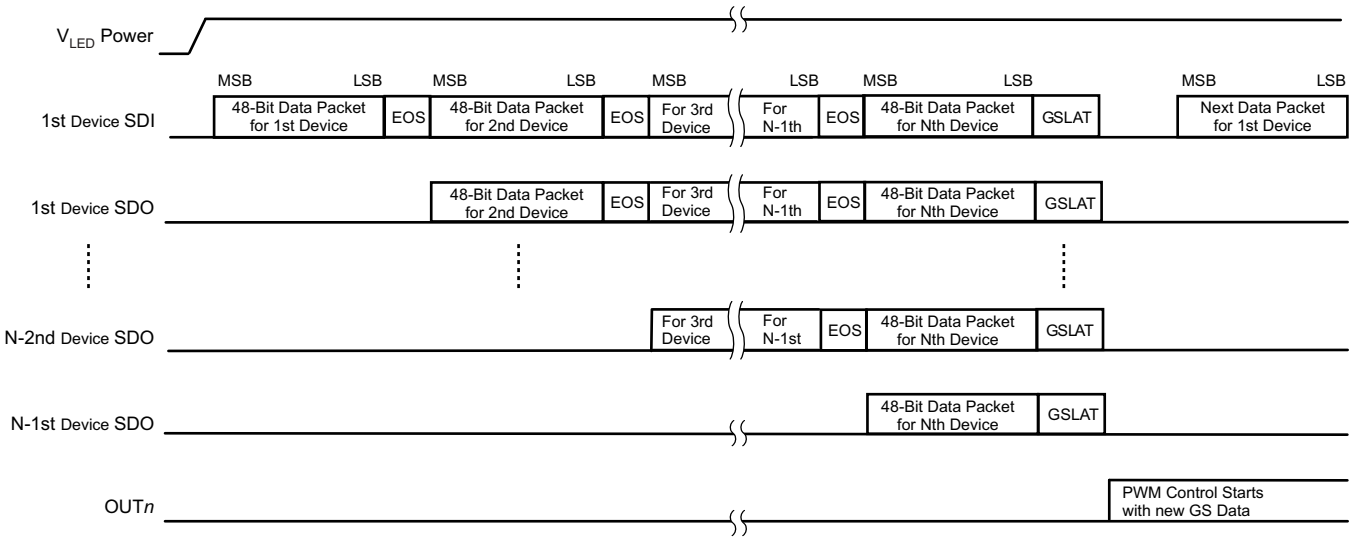

Figure 20. Data Packet Input Order for *N* TLC5973 Units

Copyright © 2013–2014, Texas Instruments Incorporated

8.6 Register Maps

8.6.1 Register and Data Latch Configuration

The TLC5973 has a 48-bit shift register and a 36-bit data latch that stores GS data. When the internal GS data latch pulse is generated and the data of the 12 MSBs in the shift register are 3AAh, the lower 36-bit data in the 48-bit shift register are copied into the 36-bit GS data latch. If the data of the 12 MSBs is not 3AAh, the 36-bit data are not copied into the 36-bit GS data latch. Figure 21 shows the shift register and GS data latch configurations. Table 3 shows the 48-bit shift register bit assignment.

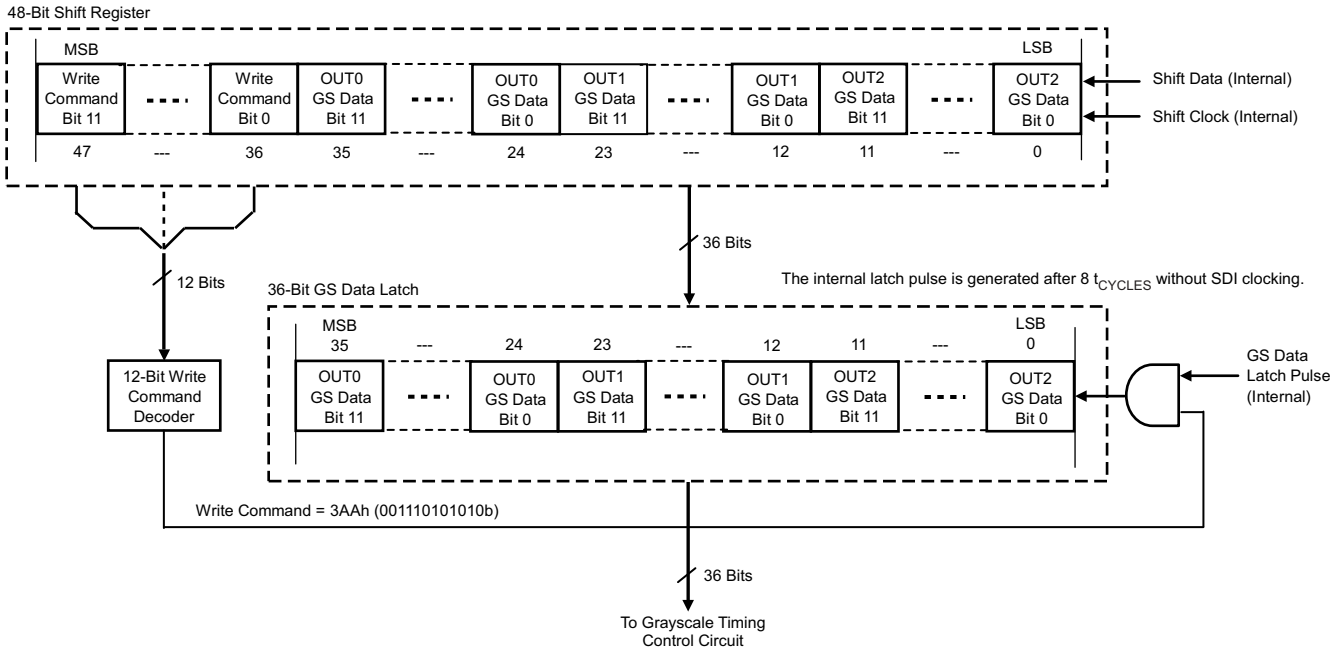

Figure 21. Common Shift Register and Control Data Latches Configuration

Table 3. 48-Bit Shift Register Data Bit Assignment

BITS	BIT NAME	CONTROLLED CHANNEL/FUNCTIONS
0 to 11	GSOUT2	GS data bits 0 to 11 for OUT2
12 to 23	GSOUT1	GS data bits 0 to 11 for OUT1
24 to 35	GSOUT0	GS data bits 0 to 11 for OUT0
36 to 47	WRTCMD	Data write command (3AAh) for GS data. The lower 36-bit GS data in the 48-bit shift register are copied to the GS data latch when the internal GS latch is generated (when these data bits are 3AAh, *001110101010b*).

Copyright © 2013–2014, Texas Instruments Incorporated

9 Applications and Implementation

9.1 Application Information

The device is a constant sink current LED driver. This device is typically used to minimize wiring cost in applications and also provides no restrictions of cascading multiple devices in series. Furthermore, the device maximum data transfer rate is 3 Mbps and can contribute high-frequency display data change rates. The following design procedures can be used to maximize application design with minimal wiring cost. The device is also a good choice for higher VCC power-supply voltage applications because of the internal shunt regulator included in the device.

9.2 Typical Applications

9.2.1 No Internal Shunt Regulator Mode 1

This application does not use the shunt regulator. However, the device VCC and LED lamp anode voltage can be supplied from the same power supply because only one LED lamp is connected in series.

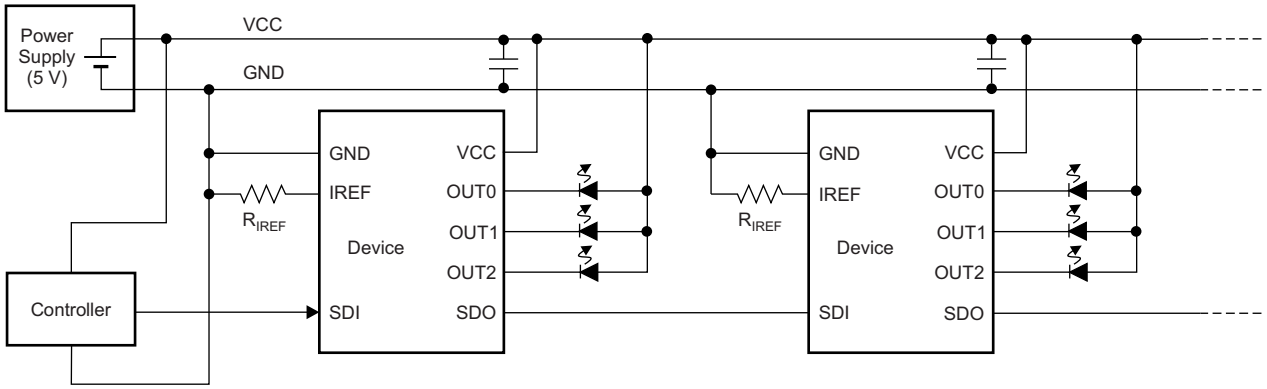

Figure 22. No Internal Shunt Regulator Mode 1 Typical Application Circuit

9.2.1.1 Design Requirements

Table 4. Design Parameters

DESIGN PARAMETER	EXAMPLE VALUE
Input voltage range for VCC	3.0 V or LED forward voltage (V_F) + 1 V to 5.5 V
SDI voltage range	Low level = GND, high level = VCC
SDI data transfer rate	100 kbps to 3 Mbps

9.2.1.2 Detailed Design Procedure

The OUT*n* (n = 0 to 2) constant output current is set by an external resistor connected between the device IREF and GND pins. Use Equation 1 to calculate the requirements for R_{IREF}.

Copyright © 2013–2014, Texas Instruments Incorporated

9.2.1.3 Application Curve

One LED is connected to each output.

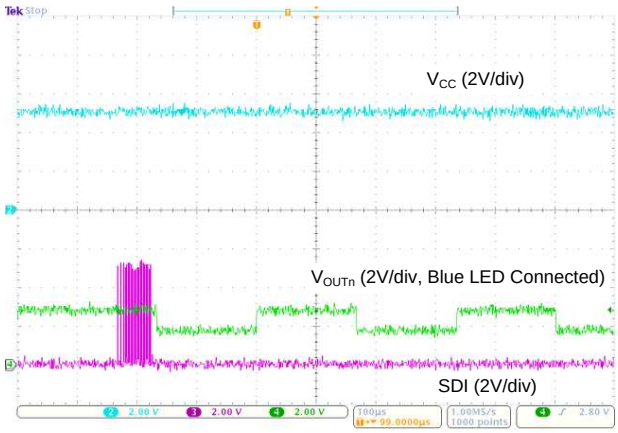

V_{CC} = 5 V R_{IREF} = 2.7 kΩ SDI high = 5 V
GS data = 7FFh (50% on duty)

Figure 23. No Internal Shunt Regulator Mode 1 Waveform

9.2.2 No Internal Shunt Regulator Mode 2

This application does not use the shunt regulator. However, the device VCC and LED lamp anode voltage are supplied from different power supplies.

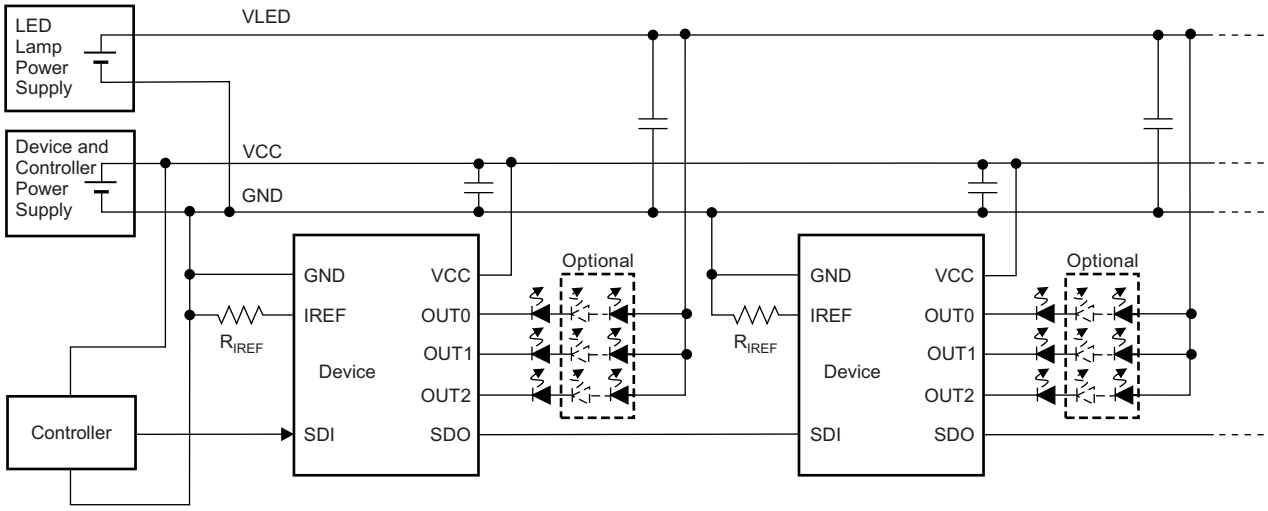

Figure 24. No Internal Shunt Regulator Mode 2 Typical Application Circuit

9.2.2.1 Design Requirements

Table 5. Design Parameters

DESIGN PARAMETER	EXAMPLE VALUE
Input voltage range for VCC	3.0 V to 5.5 V
Input voltage range for LED lamp	LED forward voltage (V_F) × the number of LED lamps + 1 V; maximum voltage is 24 V
SDI voltage range	Low level = GND, high level = VCC
SDI data frequency	100 kbps to 3 Mbps

9.2.2.2 Detailed Design Procedure

The OUT*n* (n = 0 to 2) constant output current is set by an external resistor connected between the device IREF and GND pins. Use Equation 1 to calculate the requirements for R_{IREF}.

Copyright © 2013–2014, Texas Instruments Incorporated

9.2.2.3 Application Curve

Six LEDs are connected in series to each output.

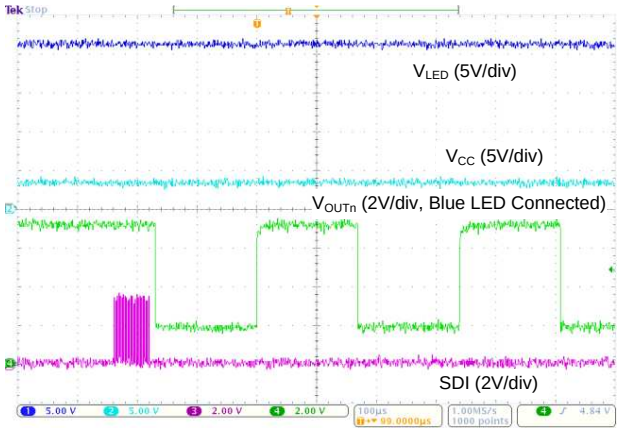

V_{CC} = 3.3 V V_{LED} = 21 V R_{IREF} = 2.7 kΩ
SDI high = 3.3 V GS data = 7FFh (50% on duty)

Figure 25. No Internal Shunt Regulator Mode 2 Waveform

9.2.3 Internal Shunt Regulator Mode

This application uses the shunt regulator. The device VCC and LED lamp anode voltage are supplied from the same power supply. At least two LED lamps are connected in series.

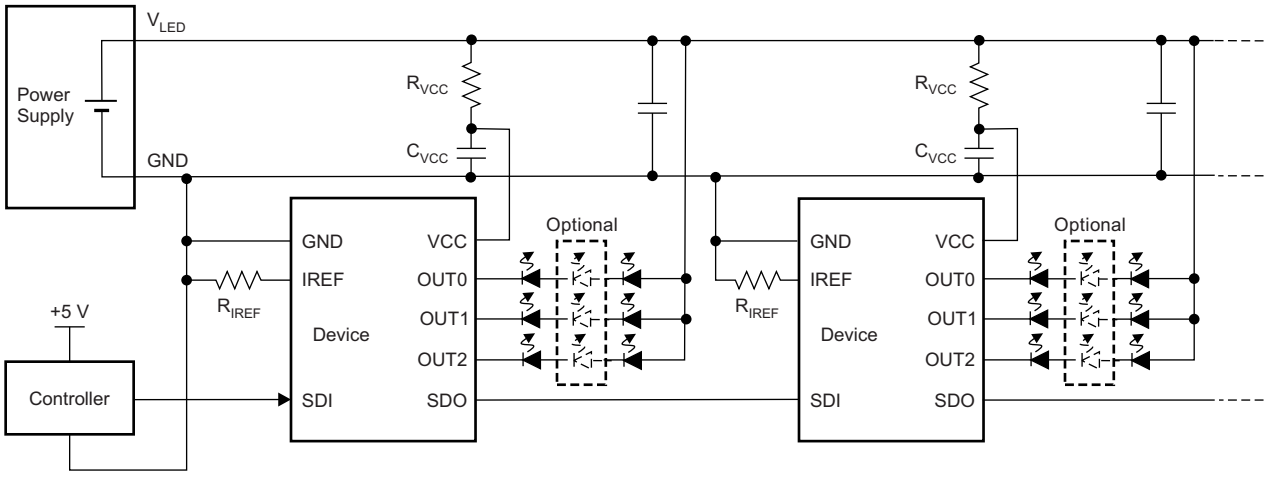

Figure 26. Internal Shunt Regulator Mode Typical Application Circuit

9.2.3.1 Design Requirements

Table 6. Design Parameters

DESIGN PARAMETER	EXAMPLE VALUE
Input voltage range for V_{LED}	6 V to 24 V
SDI voltage range	Low level = GND, high level = 5.0 V to 6.0 V
SDI data transfer rate	100 kbps to 3 Mbps

9.2.3.2 Detailed Design Procedure

The TLC5973 internally integrates a shunt regulator to regulate V_{CC} voltage. Refer to Figure 27 for an application circuit that uses the internal shunt regulator through a resistor, R_{VCC}. The recommended R_{VCC} value can be calculated by Equation 2.

$$\frac{V_{LED}\,(V) - 5.9\ V}{13\ mA} < R_{VCC} < \frac{V_{LED}\,(V) - 5.9\ V}{11\ mA} \quad (2)$$

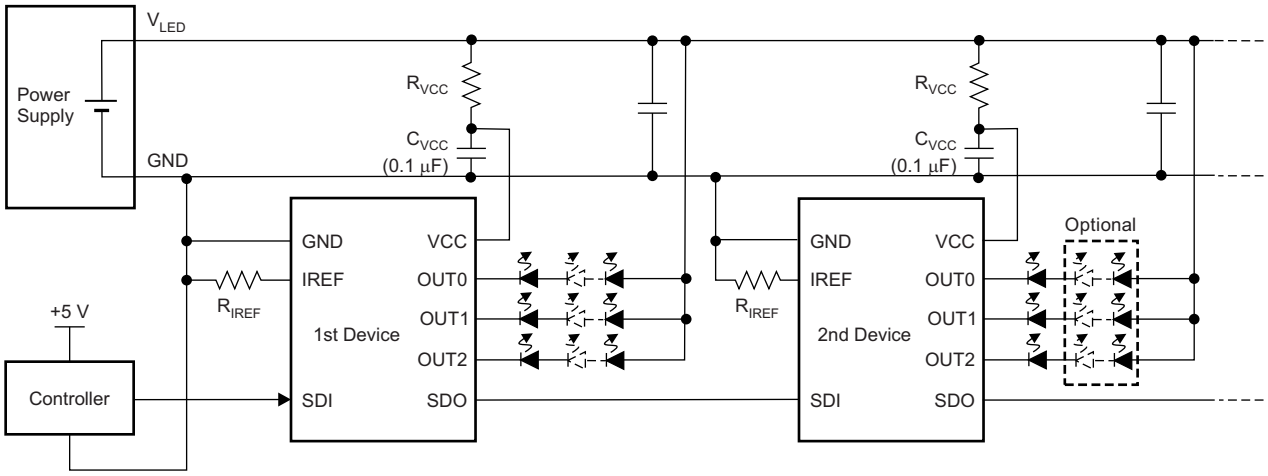

Figure 27. Internal Shunt Regulator Mode Application Circuit

Copyright © 2013–2014, Texas Instruments Incorporated

Table 7 shows the typical resistor value for several V_{LED} voltages. Note that the C_{VCC} value should be 0.1 µF.

Table 7. Resistor Example for Shunt Resistor versus LED Voltage(1)

V_{LED} (V)	R_{VCC} (Ω)	RESISTOR WATTAGE (W)
9	270	0.04
12	510	0.07
18	1000	0.15
24	1500	0.22

(1) R_{IREF} is at 1.5 kΩ.

9.2.3.3 Application Curves

Six LEDs are connected in series to each output.

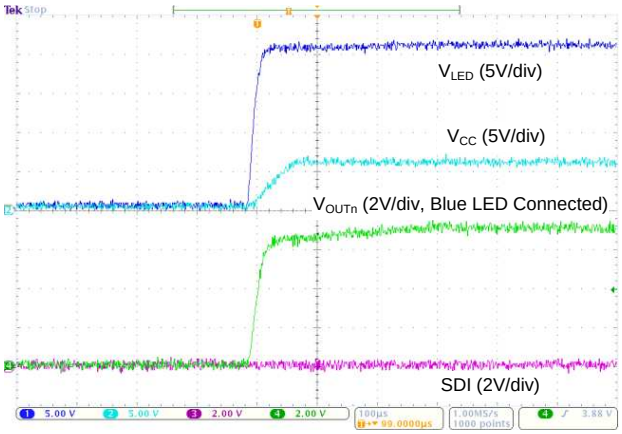

V_{LED} = 21 V R_{IREF} = 2.7 kΩ R_{VCC} = 1.2 kΩ
SDI high = 6 V GS data = 7FFh (50% on duty)

Figure 28. Internal Shunt Regulator Mode Waveform 1



V_{LED} = 21 V R_{IREF} = 2.7 kΩ R_{VCC} = 1.2 kΩ
SDI high = 6 V GS data = 7FFh (50% on duty)

Figure 29. Internal Shunt Regulator Mode Waveform 2

Copyright © 2013–2014, Texas Instruments Incorporated

10 Power Supply Recommendations

The power supply voltage should be well regulated. An electrolytic capacitor must be used to reduce the voltage ripple to less than 5% of the input voltage.

11 Layout

11.1 Layout Guidelines

- The resistor used for the output current setting should be placed near the IREF and GND pins of the device.
- The decoupling capacitor and the shunt regulator resistor should be placed near the VCC pin of the device.

11.2 Layout Example

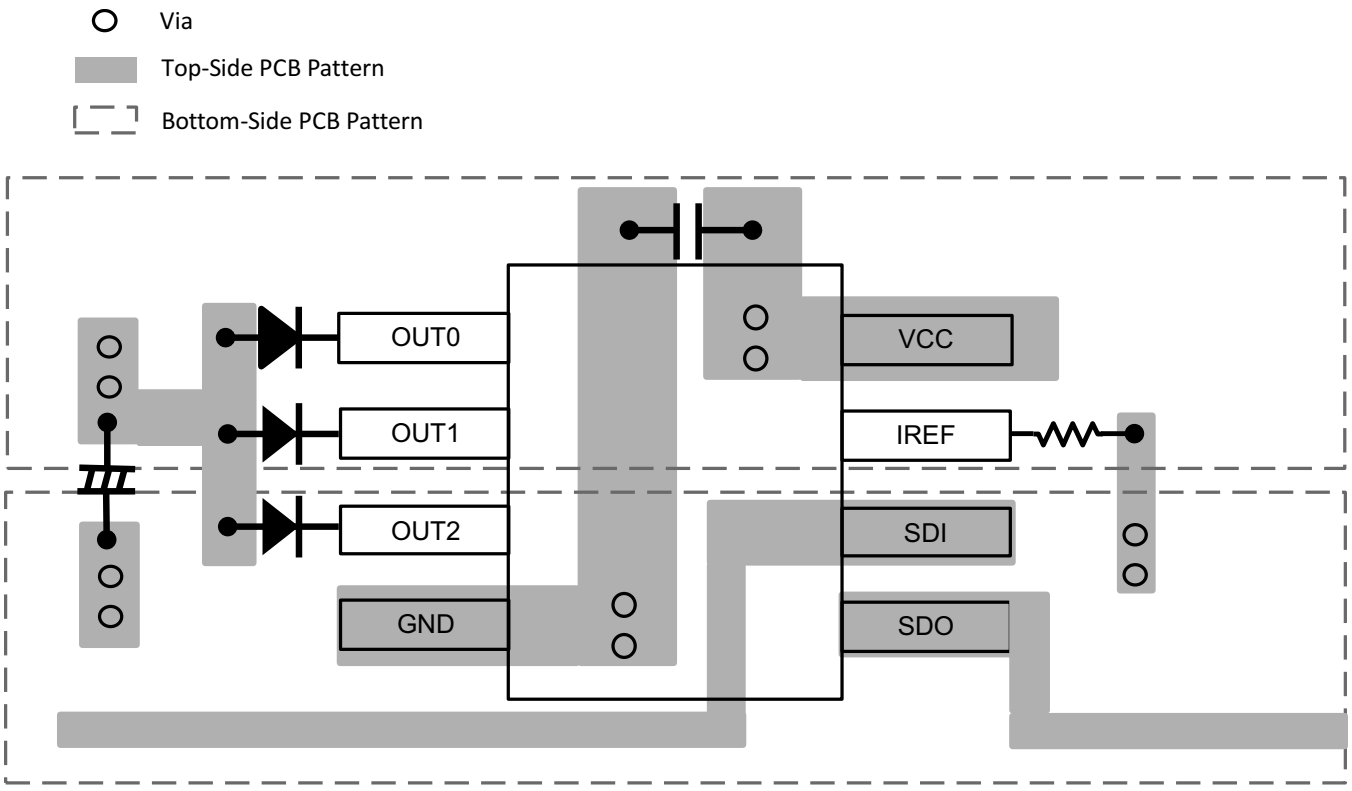

Figure 30. Layout Example

Copyright © 2013–2014, Texas Instruments Incorporated

12 器件和文档支持

12.1 Trademarks

EasySet is a trademark of Texas Instruments, Inc.
All other trademarks are the property of their respective owners.

12.2 Electrostatic Discharge Caution



These devices have limited built-in ESD protection. The leads should be shorted together or the device placed in conductive foam during storage or handling to prevent electrostatic damage to the MOS gates.

12.3 Glossary

SLYZ022 — *TI Glossary*.

This glossary lists and explains terms, acronyms and definitions.

13 机械封装和可订购信息

以下页中包括机械封装和可订购信息。 这些信息是针对指定器件可提供的最新数据。 这些数据会在无通知且不对本文档进行修订的情况下发生改变。 欲获得该数据表的浏览器版本，请查阅左侧的导航栏。

Copyright © 2013–2014, Texas Instruments Incorporated

PACKAGING INFORMATION

Orderable Device	Status (1)	Package Type	Package Drawing	Pins	Package Qty	Eco Plan (2)	Lead finish/ Ball material (6)	MSL Peak Temp (3)	Op Temp (°C)	Device Marking (4/5)	Samples
TLC5973D	ACTIVE	SOIC	D	8	75	RoHS & Green	NIPDAU	Level-1-260C-UNLIM	-40 to 125	5973	Samples
TLC5973DR	ACTIVE	SOIC	D	8	2500	RoHS & Green	NIPDAU	Level-1-260C-UNLIM	-40 to 125	5973	Samples

(1) The marketing status values are defined as follows:
ACTIVE: Product device recommended for new designs.
LIFEBUY: TI has announced that the device will be discontinued, and a lifetime-buy period is in effect.
NRND: Not recommended for new designs. Device is in production to support existing customers, but TI does not recommend using this part in a new design.
PREVIEW: Device has been announced but is not in production. Samples may or may not be available.
OBSOLETE: TI has discontinued the production of the device.

(2) **RoHS:** TI defines "RoHS" to mean semiconductor products that are compliant with the current EU RoHS requirements for all 10 RoHS substances, including the requirement that RoHS substance do not exceed 0.1% by weight in homogeneous materials. Where designed to be soldered at high temperatures, "RoHS" products are suitable for use in specified lead-free processes. TI may reference these types of products as "Pb-Free".
RoHS Exempt: TI defines "RoHS Exempt" to mean products that contain lead but are compliant with EU RoHS pursuant to a specific EU RoHS exemption.
Green: TI defines "Green" to mean the content of Chlorine (Cl) and Bromine (Br) based flame retardants meet JS709B low halogen requirements of <=1000ppm threshold. Antimony trioxide based flame retardants must also meet the <=1000ppm threshold requirement.

(3) MSL, Peak Temp. - The Moisture Sensitivity Level rating according to the JEDEC industry standard classifications, and peak solder temperature.

(4) There may be additional marking, which relates to the logo, the lot trace code information, or the environmental category on the device.

(5) Multiple Device Markings will be inside parentheses. Only one Device Marking contained in parentheses and separated by a "~" will appear on a device. If a line is indented then it is a continuation of the previous line and the two combined represent the entire Device Marking for that device.

(6) Lead finish/Ball material - Orderable Devices may have multiple material finish options. Finish options are separated by a vertical ruled line. Lead finish/Ball material values may wrap to two lines if the finish value exceeds the maximum column width.

Important Information and Disclaimer: The information provided on this page represents TI's knowledge and belief as of the date that it is provided. TI bases its knowledge and belief on information provided by third parties, and makes no representation or warranty as to the accuracy of such information. Efforts are underway to better integrate information from third parties. TI has taken and continues to take reasonable steps to provide representative and accurate information but may not have conducted destructive testing or chemical analysis on incoming materials and chemicals. TI and TI suppliers consider certain information to be proprietary, and thus CAS numbers and other limited information may not be available for release.

In no event shall TI's liability arising out of such information exceed the total purchase price of the TI part(s) at issue in this document sold by TI to Customer on an annual basis.

TAPE AND REEL INFORMATION

REEL DIMENSIONS

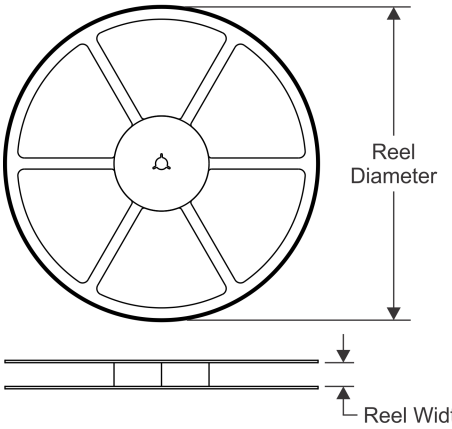

TAPE DIMENSIONS

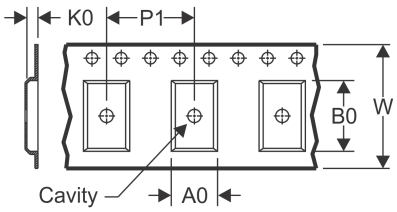

A0	Dimension designed to accommodate the component width
B0	Dimension designed to accommodate the component length
K0	Dimension designed to accommodate the component thickness
W	Overall width of the carrier tape
P1	Pitch between successive cavity centers

QUADRANT ASSIGNMENTS FOR PIN 1 ORIENTATION IN TAPE

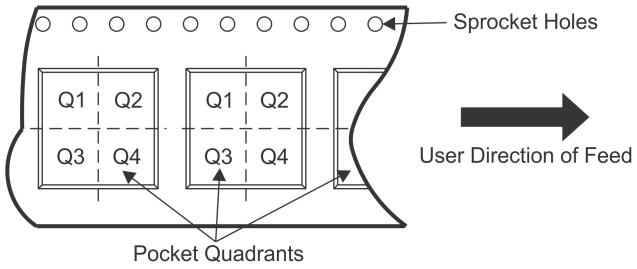

*All dimensions are nominal

Device	Package Type	Package Drawing	Pins	SPQ	Reel Diameter (mm)	Reel Width W1 (mm)	A0 (mm)	B0 (mm)	K0 (mm)	P1 (mm)	W (mm)	Pin1 Quadrant
TLC5973DR	SOIC	D	8	2500	330.0	12.5	6.4	5.2	2.1	8.0	12.0	Q1

TAPE AND REEL BOX DIMENSIONS

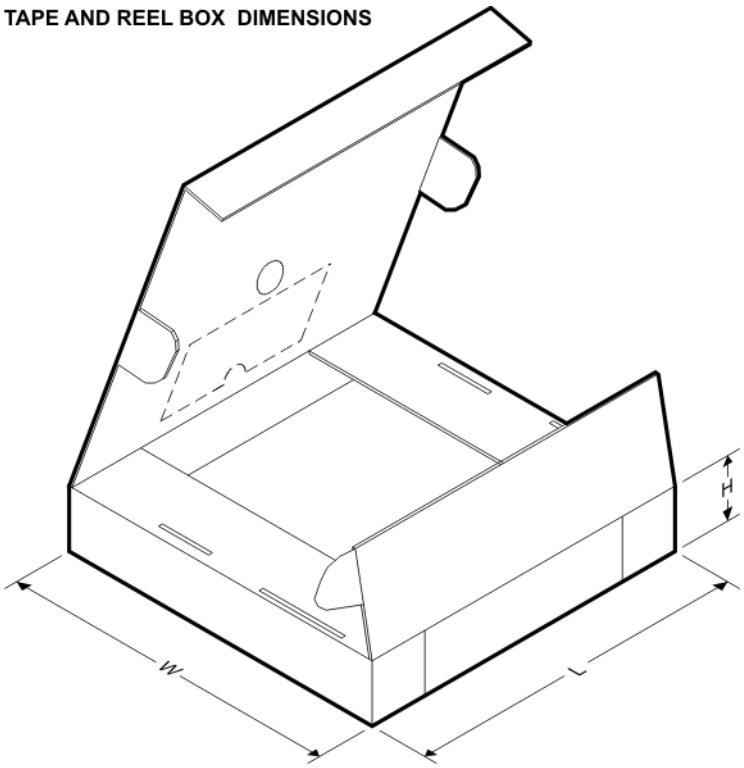

*All dimensions are nominal

Device	Package Type	Package Drawing	Pins	SPQ	Length (mm)	Width (mm)	Height (mm)
TLC5973DR	SOIC	D	8	2500	340.5	336.1	25.0

TUBE

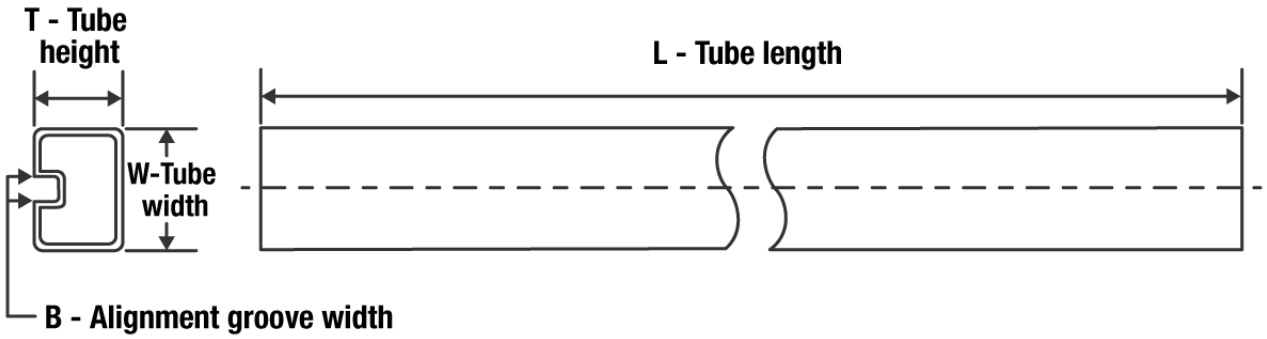

*All dimensions are nominal

Device	Package Name	Package Type	Pins	SPQ	L (mm)	W (mm)	T (µm)	B (mm)
TLC5973D	D	SOIC	8	75	507	8	3940	4.32

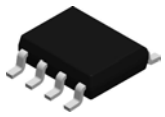

PACKAGE OUTLINE

D0008A

SOIC - 1.75 mm max height

SMALL OUTLINE INTEGRATED CIRCUIT

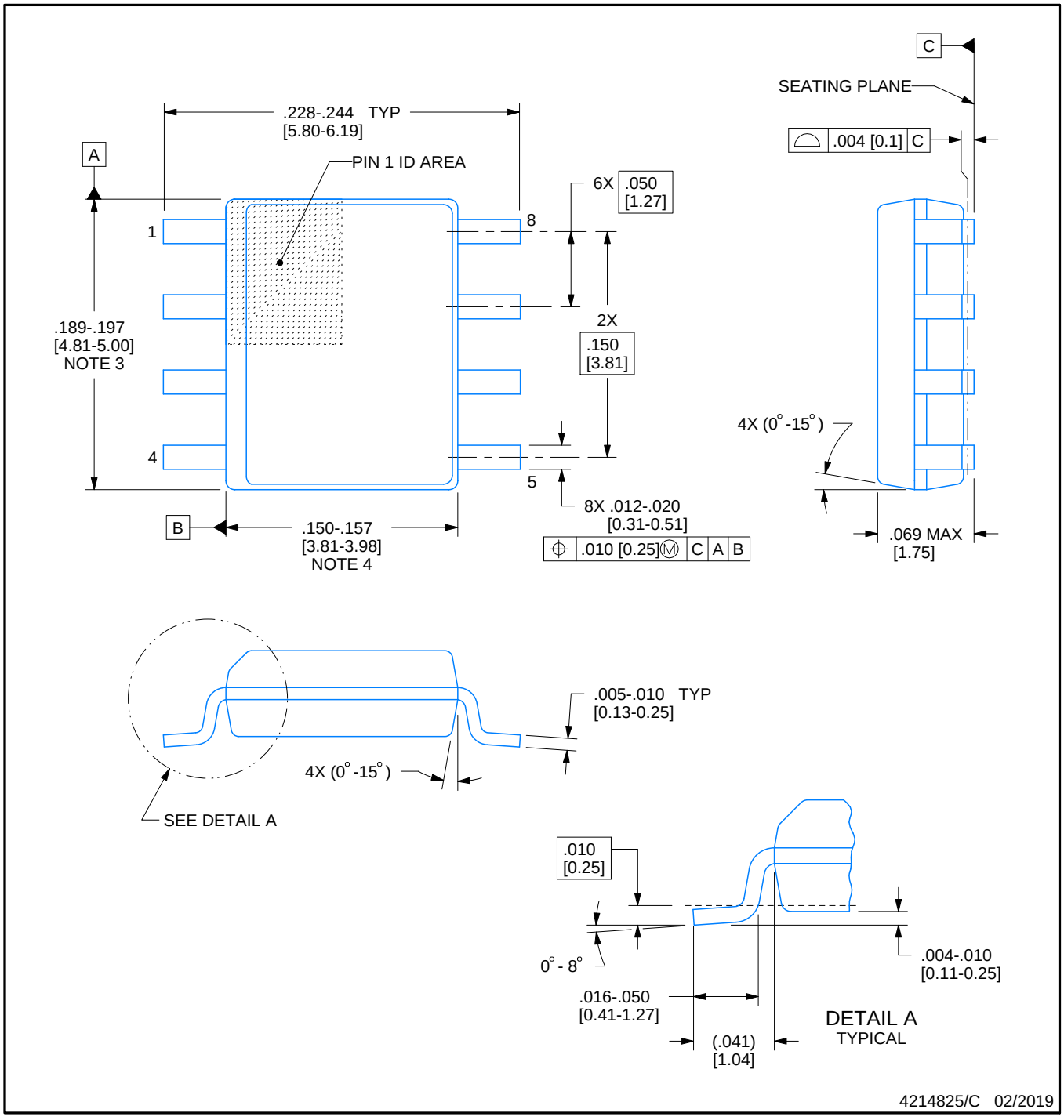

NOTES:

1. Linear dimensions are in inches [millimeters]. Dimensions in parenthesis are for reference only. Controlling dimensions are in inches. Dimensioning and tolerancing per ASME Y14.5M.
2. This drawing is subject to change without notice.
3. This dimension does not include mold flash, protrusions, or gate burrs. Mold flash, protrusions, or gate burrs shall not exceed .006 [0.15] per side.
4. This dimension does not include interlead flash.
5. Reference JEDEC registration MS-012, variation AA.

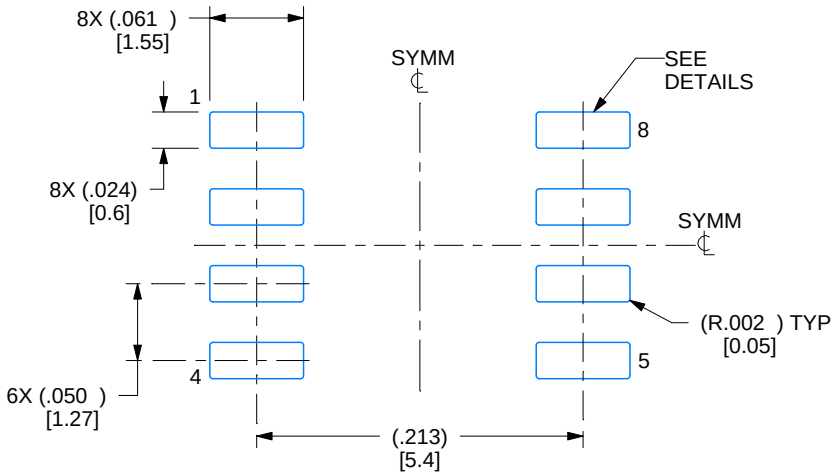

LAND PATTERN EXAMPLE
EXPOSED METAL SHOWN
SCALE:8X

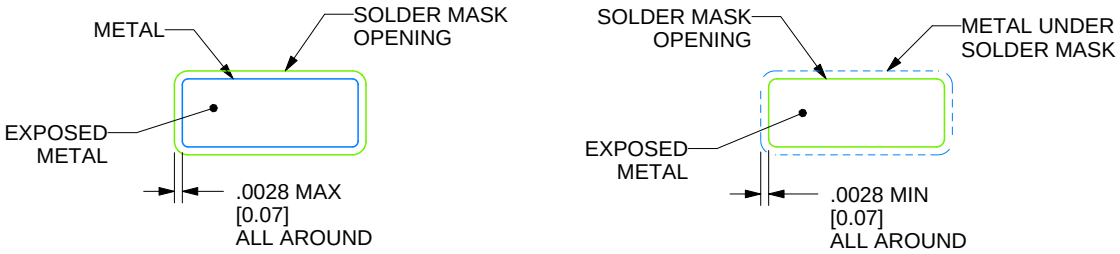

SOLDER MASK DETAILS

4214825/C 02/2019

NOTES: (continued)

6. Publication IPC-7351 may have alternate designs.
7. Solder mask tolerances between and around signal pads can vary based on board fabrication site.

EXAMPLE STENCIL DESIGN

D0008A

SOIC - 1.75 mm max height

SMALL OUTLINE INTEGRATED CIRCUIT

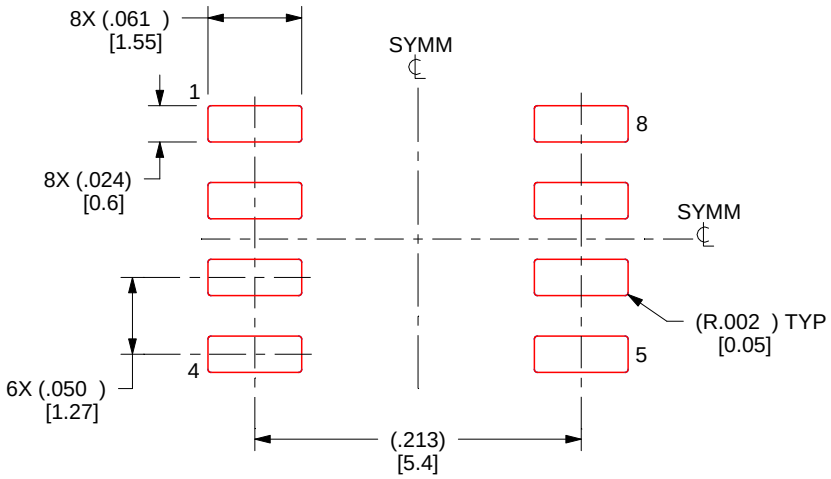

SOLDER PASTE EXAMPLE
BASED ON .005 INCH [0.125 MM] THICK STENCIL
SCALE:8X

4214825/C 02/2019

NOTES: (continued)

8. Laser cutting apertures with trapezoidal walls and rounded corners may offer better paste release. IPC-7525 may have alternate design recommendations.
9. Board assembly site may have different recommendations for stencil design.

重要声明和免责声明

TI“按原样”提供技术和可靠性数据（包括数据表）、设计资源（包括参考设计）、应用或其他设计建议、网络工具、安全信息和其他资源，不保证没有瑕疵且不做出任何明示或暗示的担保，包括但不限于对适销性、某特定用途方面的适用性或不侵犯任何第三方知识产权的暗示担保。

这些资源可供使用 TI 产品进行设计的熟练开发人员使用。您将自行承担以下全部责任：(1) 针对您的应用选择合适的 TI 产品，(2) 设计、验证并测试您的应用，(3) 确保您的应用满足相应标准以及任何其他功能安全、信息安全、监管或其他要求。

这些资源如有变更，恕不另行通知。TI 授权您仅可将这些资源用于研发本资源所述的 TI 产品的应用。严禁对这些资源进行其他复制或展示。您无权使用任何其他 TI 知识产权或任何第三方知识产权。您应全额赔偿因在这些资源的使用中对 TI 及其代表造成的任何索赔、损害、成本、损失和债务，TI 对此概不负责。

TI 提供的产品受 TI 的销售条款或 ti.com 上其他适用条款/TI 产品随附的其他适用条款的约束。TI 提供这些资源并不会扩展或以其他方式更改 TI 针对 TI 产品发布的适用的担保或担保免责声明。

TI 反对并拒绝您可能提出的任何其他或不同的条款。

邮寄地址：Texas Instruments, Post Office Box 655303, Dallas, Texas 75265
Copyright © 2022，德州仪器 (TI) 公司