LOW INPUT VOLTAGE, 1-A LOW-DROPOUT LINEAR REGULATORS WITH SUPERVISOR

Check for Samples: TPS72501, TPS72515, TPS72516, TPS72518, TPS72525

FEATURES

- **1-A Output Current**
- **Available in 1.5-V, 1.6-V, 1.8-V, 2.5-V Fixed-Output and Adjustable Versions (1.2-V to 5.5-V)**
- **Input Voltage Down to 1.8 V**
- **Low 170-mV Dropout Voltage at 1 A (TPS72525)**
- **Stable With Any Type/Value Output Capacitor**
- **Integrated Supervisor (SVS) With 50-ms $\overline{\text{RESET}}$ Delay Time**
- **Low 210-µA Ground Current at Full Load (TPS72525)**
- **Less than 1-µA Standby Current**
- **±2% Output Voltage Tolerance Over Line, Load, and Temperature (-40°C to 125°C)**
- **Integrated UVLO**
- **Thermal and Overcurrent Protection**
- **5-Lead SOT223-5 or DDPAK and 8-Pin SOP (TPS72501 only) Surface Mount Package**

APPLICATIONS

- **PCI Cards**
- **Modem Banks**
- **Telecom Boards**
- **DSP, FPGA, and Microprocessor Power Supplies**
- **Portable, Battery-Powered Applications**

DESCRIPTION

The TPS725xx family of 1-A low-dropout (LDO) linear regulators has fixed voltage options available that are commonly used to power the latest DSPs, FPGAs, and microcontrollers. An adjustable option ranging from 1.22 V to 5.5 V is also available. The integrated supervisory circuitry provides an active low $\overline{\text{RESET}}$ signal when the output falls out of regulation. The no capacitor/any capacitor feature allows the customer to tailor output transient performance as needed. Therefore, compared to other regulators capable of providing the same output current, this family of regulators can provide a stand-alone power supply solution or a post regulator for a switch mode power supply.

These regulators are ideal for higher current applications. The family operates over a wide range of input voltages (1.8 V to 6 V) and has very low dropout (170 mV at 1-A).

Ground current is typically 210 µA at full load and drops to less than 80 µA at no load. Standby current is less than 1 µA.

Each regulator option is available in either a SOT223-5, D (TPS72501 only), or DDPAK package. With a low input voltage and properly heatsinked package, the regulator dissipates more power and achieves higher efficiencies than similar regulators requiring 2.5 V or more minimum input voltage and higher quiescent currents. These features make it a viable power supply solution for portable, battery-powered equipment.

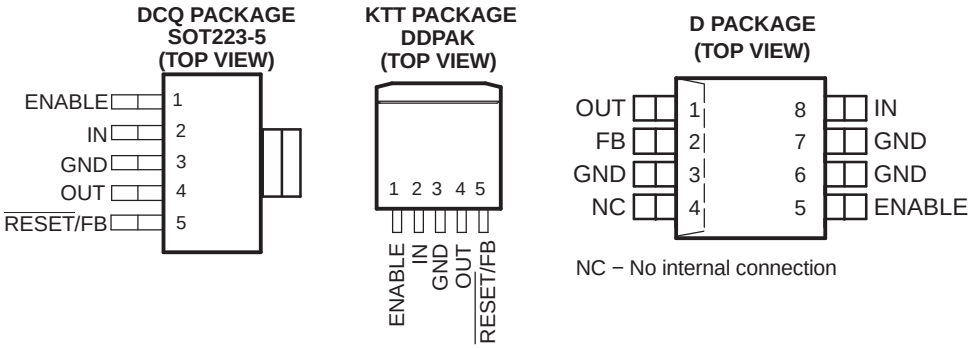

NOTE: TPS72501 replaces RESET with FB. Tab is GND for the DCK and KTT packages.

Please be aware that an important notice concerning availability, standard warranty, and use in critical applications of Texas Instruments semiconductor products and disclaimers thereto appears at the end of this data sheet.

PRODUCTION DATA information is current as of publication date. Products conform to specifications per the terms of the Texas Instruments standard warranty. Production processing does not necessarily include testing of all parameters.

Copyright © 2002–2010, Texas Instruments Incorporated

This integrated circuit can be damaged by ESD. Texas Instruments recommends that all integrated circuits be handled with appropriate precautions. Failure to observe proper handling and installation procedures can cause damage.

ESD damage can range from subtle performance degradation to complete device failure. Precision integrated circuits may be more susceptible to damage because very small parametric changes could cause the device not to meet its published specifications.

DESCRIPTION (CONTINUED)

Although an output capacitor is not required for stability, transient response and output noise are improved with a 10-µF output capacitor.

Unlike some regulators that have a minimum current requirement, the TPS725 family is stable with no output load current. The low noise capability of this family, coupled with its high current operation and ease of power dissipation, make it ideal for telecom boards, modem banks, and other noise-sensitive applications.

ORDERING INFORMATION

T_J	VOLTAGE(1)	SOT223-5(2)	SYMBOL	DDPAK(3)	D(4)	SYMBOL
-40°C to 125°C	Adjustable (1.2 V to 5 V)	TPS72501DCQ	PS72501	TPS72501KTT	TPS72501D	TPS72501
	1.5 V	TPS72515DCQ	PS72515	TPS72515KTT	—	TPS72515
	1.6 V	TPS72516DCQ	PS72516	TPS72516KTT	—	TPS72516
	1.8 V	TPS72518DCQ	PS72518	TPS72518KTT	—	TPS72518
	2.5 V	TPS72525DCQ	PS72525	TPS72525KTT	—	TPS72525

(1) Other voltage options are available upon request from the manufacturer.
(2) To order a taped and reeled part, add the suffix **R** to the part number (e.g., TPS72501DCQ**R**).
(3) To order a 50-piece reel, add the suffix **T** (e.g., TPS72501KTT**T**); to order a 500-piece reel, add the suffix **R** (e.g., TPS72501KTT**R**).
(4) To order a taped and reeled part, add the suffix **R** or **T** (2500 or 500) to the part number (e.g. TPS72501D**R**)

ABSOLUTE MAXIMUM RATINGS

over operating free-air temperature range unless otherwise noted(1)

		UNIT
Input voltage, V_I (2)	-0.3 to 7	V
Voltage range at EN, FB	-0.3 to V_I + 0.3	V
Voltage on OUT, $\overline{\text{RESET}}$	6	V
ESD rating, HBM	2	kV
Continuous total power dissipation	See Dissipation Ratings Table	
Operating junction temperature range, T_J	-50 to 150	°C
Maximum junction temperature range, T_J	150	°C
Storage temperature, T_{stg}	-65 to 150	°C

(1) Stresses beyond those listed under *absolute maximum ratings* may cause permanent damage to the device. These are stress ratings only, and functional operation of the device at these or any other conditions beyond those indicated under *recommended operating conditions* is not implied. Exposure to absolute-maximum-rated conditions for extended periods may affect device reliability.
(2) All voltage values are with respect to network ground terminal.

RECOMMENDED OPERATING CONDITIONS

	MIN	NOM	MAX	UNIT
Input voltage, V_I (1)	1.8		6	V
Continuous output current, I_O	0		1	A
Operating junction temperature, T_J	-40		125	°C

(1) Minimum $V_I = V_O$ (nom) + V_{DO}.

Copyright © 2002–2010, Texas Instruments Incorporated

PACKAGE DISSIPATION RATINGS

PACKAGE	BOARD	$R_{\theta JC}$	$R_{\theta JA}$
DDPAK	High K(1)	2 °C/W	23 °C/W
SOT223	Low K(2)	15 °C/W	53 °C/W
D-8	High K(1)	39.4 °C/W	55 °C/W

(1) The JEDEC high-K (2s2p) board design used to derive this data was a 3-inch x 3-inch (7.5-cm x 7.5-cm), multilayer board with 1 ounce internal power and ground planes and 2 ounce copper traces on top and bottom of the board.
(2) The JEDEC low-K (1s) board design used to derive this data was a 3-inch x 3-inch (7.5-cm x 7.5-cm), two-layer board with 2 ounce copper traces on top of the board.

ELECTRICAL CHARACTERISTICS

over recommended operating free-air temperature range $V_I = V_{O(typ)} + 1$ V, I_O= 1 mA, EN = IN, C_o = 1 µF, C_i = 1 µF (unless otherwise noted)

PARAMETER			TEST CONDITIONS		MIN	TYP	MAX	UNIT
	Bandgap voltage reference				1.177	1.220	1.263	V
V_O	Output voltage	TPS72501 Adjustable	0 µA < I_O < 1 A(1)	1.22 V ≤ V_O ≤ 5.5 V	0.965 V_O		1.035 V_O	V
		TPS72515	T_J = 25°C			1.5		
			0 µA< I_O < 1 A	1.8 V ≤ V_I ≤ 5.5 V	1.47		1.53	
		TPS72516	T_J = 25°C			1.6		
			0 µA < I_O < 1 A	2.6 V ≤ V_I ≤ 5.5 V	1.568		1.632	
		TPS72518	T_J = 25°C			1.8		
			0 µA < I_O < 1 A	2.8 V ≤ V_I ≤ 5.5 V	1.764		1.836	
		TPS72525	T_J = 25°C			2.5		
			0 µA < I_O < 1 A	3.5 V ≤ V_I ≤ 5.5 V	2.45		2.55	
I	Ground current		I_O = 0 µA			75	120	µA
			I_O = 1 A			210	300	
	Standby current		EN < 0.4 V	T_J = 25°C		0.2		µA
			EN < 0.4 V				1	
V_n	Output noise voltage		BW = 200 Hz to 100 kHz, T_J = 25°C	C_o = 10 µF, I_O = 1 mA		150		µV
PSRR	Ripple rejection		f = 1 kHz, C_o = 10 µF	T_J = 25°C		60		dB
	Current limit(2)				1.1	1.6	2.3	A
	Output voltage line regulation ($\Delta V_O/V_O$)(3)		V_O + 1 V < V_I≤ 5.5 V		-0.15	0.02	0.15	%/V
	Output voltage load regulation		0 µA < I_O < 1 A		-0.25	0.05	0.25	%/A
V_{IH}	EN high level input(2)				1.3			V
V_{IL}	EN low level input(2)				-0.2		0.4	
I_I	EN input current		EN = 0 V or V_I			0.01	100	nA
$I_{(FB)}$	Feedback current		TPS72501	$V_{(FB)}$ = 1.22	-100		100	nA
	UVLO threshold		V_{CC} rising		1.45	1.57	1.70	V
	UVLO hysteresis		T_J = 25°C, V_{CC} rising			50		mV
	UVLO deglitch		T_J = 25°C, V_{CC} rising			10		µs
	UVLO delay		T_J = 25°C, V_{CC} rising			100		µs

(1) Minimum IN operating voltage used for testing is $V_{O(typ)}$ + 1 V.
(2) Test condition includes output voltage V_O = V_O - 15% and pulse duration = 10 ms.
(3) V_{Imin} = (V_O + 1) or 1.8 V whichever is greater.

$$\text{Line regulation (mV)} = (\%/V) \times \frac{V_O(5.5\ V - V_{Imin})}{100} \times 1000$$

ELECTRICAL CHARACTERISTICS (continued)

over recommended operating free-air temperature range $V_I = V_{O(typ)} + 1$ V, I_O= 1 mA, EN = IN, C_o = 1 µF, C_i = 1 µF (unless otherwise noted)

PARAMETER			TEST CONDITIONS		MIN	TYP	MAX	UNIT
V_{DO}	Dropout voltage	TPS72525 (4)	I_O = 1 A	T_J = 25°C		170		mV
			I_O = 1 A				280	
		TPS72518 (5)	I_O = 1 A	T_J = 25°C		210		
			I_O = 1 A				320	
$\overline{RESET}$	Minimum input voltage for valid $\overline{RESET}$				1.3			V
	Trip threshold voltage				90	93	96	$\%V_O$
	Hysteresis voltage					10		mV
	$t_{(RESET)}$ delay time				25	50	75	ms
	Rising edge deglitch					10		µs
	Output low voltage (at 700 µA)				-0.3		0.4	V
	Leakage current						100	nA

(4) Dropout voltage is defined as the differential voltage between V_O and V_I when V_O drops 100 mV below the value measured with $V_I = V_O + 1$ V.
(5) Dropout voltage is defined as the differential voltage between V_O and V_I when V_O drops 100 mV below the value measured with $V_I = V_O + 1$ V.

Copyright © 2002–2010, Texas Instruments Incorporated

FUNCTIONAL BLOCK DIAGRAM—ADJUSTABLE VERSION

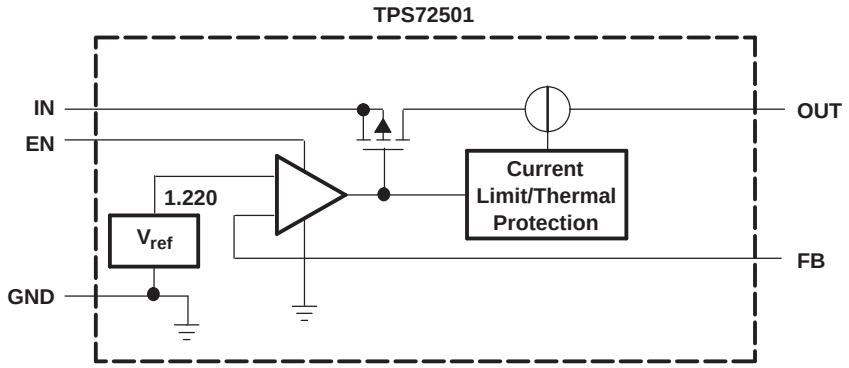

FUNCTIONAL BLOCK DIAGRAM—FIXED VERSION

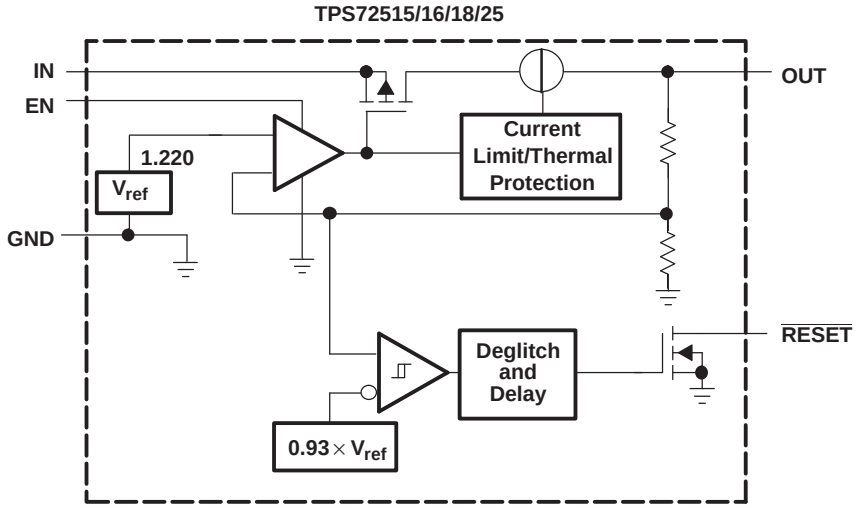

TERMINAL FUNCTIONS

TERMINAL			I/O	DESCRIPTION
NAME	NO. D	NO.D CQ & KTT		
ENABLE	5	1	I	Enable input
FB	2			Feedback
GND	3, 6, 7	3		Ground
IN	8	2	I	Input supply voltage
$\overline{\text{RESET}}$/FB	—	5	O/I	This terminal is the feedback point for the adjustable option TPS72501. For all other options, this terminal is the $\overline{\text{RESET}}$ output terminal. When used with a pullup resistor, this open-drain output provides the active low $\overline{\text{RESET}}$ signal when the regulator output voltage drops more than 5% below its nominal output voltage. The $\overline{\text{RESET}}$ delay time is typically 50 ms.
NC	4	—		No connection
OUT	1	4	O	Regulated output voltage

Copyright © 2002–2010, Texas Instruments Incorporated

$\overline{\text{RESET}}$ TIMING DIAGRAM

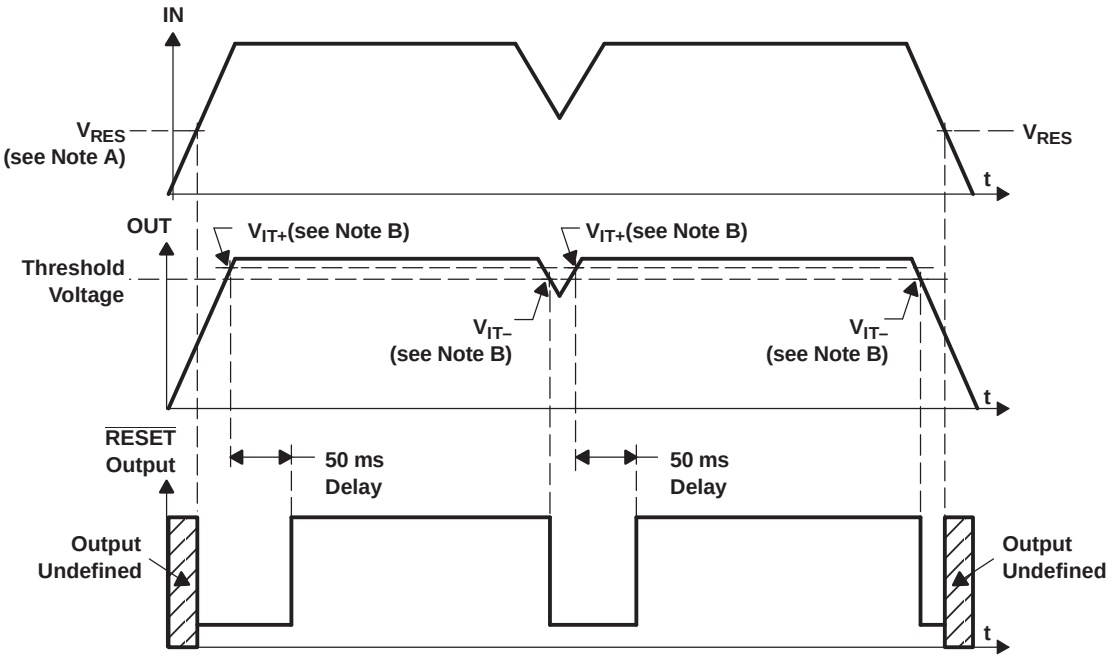

NOTES:A. V_{RES} is the minimum input voltage for a valid $\overline{\text{RESET}}$. The symbol V_{RES} is not currently listed within EIA or JEDEC standards for semiconductor symbology.

B. V_{IT} –Trip voltage is typically 7% lower than the output voltage (93%V_O) V_{IT-} to V_{IT+} is the hysteresis voltage.

TYPICAL CHARACTERISTICS

TPS72518 OUTPUT VOLTAGE vs OUTPUT CURRENT

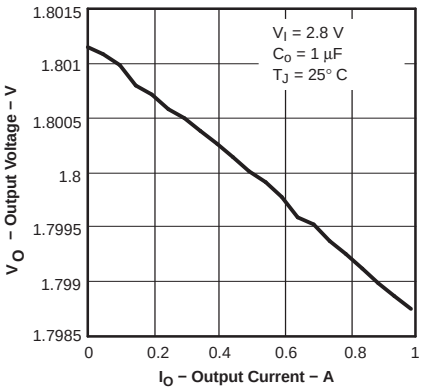

Figure 1.

TPS72518 OUTPUT VOLTAGE vs JUNCTION TEMPERATURE

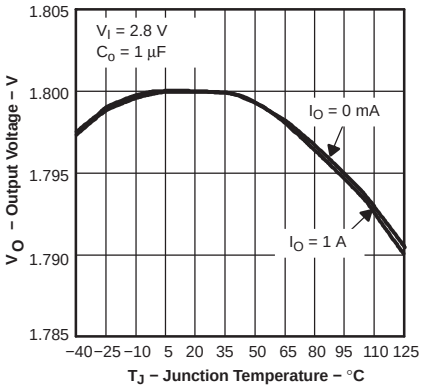

Figure 2.

TPS72518 GROUND CURRENT vs JUNCTION TEMPERATURE

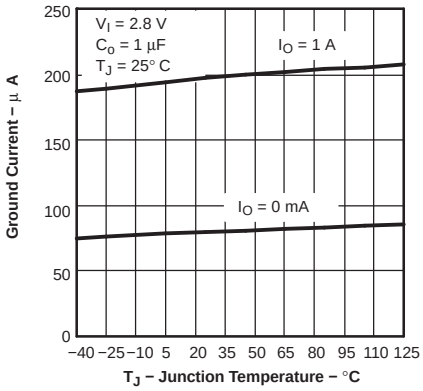

Figure 3.

Copyright © 2002–2010, Texas Instruments Incorporated

TYPICAL CHARACTERISTICS (continued)

TPS72518
GROUND CURRENT
vs
OUTPUT CURRENT

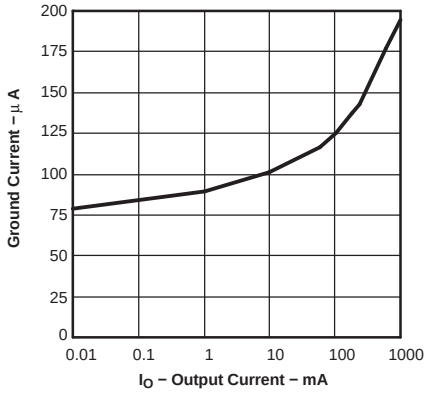

Figure 4.

TPS72525
DC DROPOUT VOLTAGE
vs
OUTPUT CURRENT

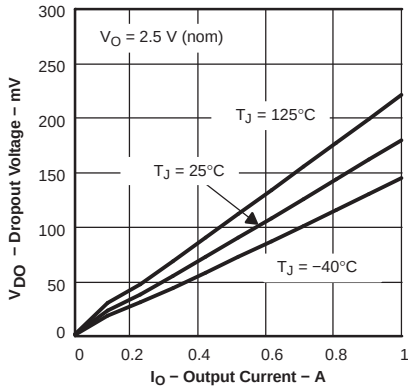

Figure 5.

TPS72518
DROPOUT VOLTAGE
vs
JUNCTION TEMPERATURE

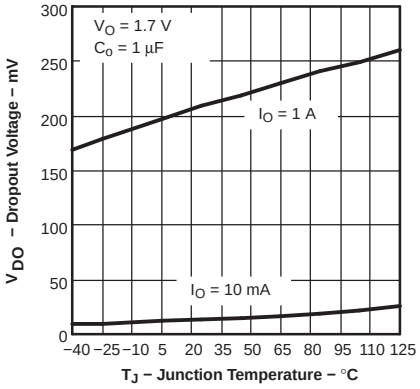

Figure 6.

MINIMUM REQUIRED
INPUT VOLTAGE
vs
OUTPUT VOLTAGE

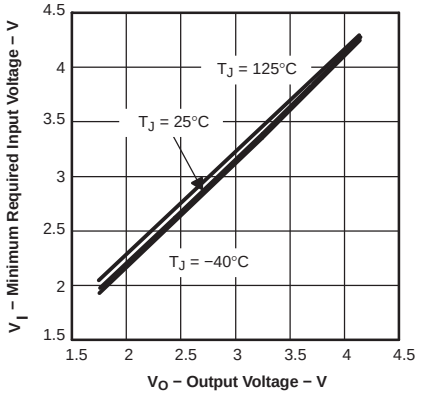

Figure 7.

TPS72518
LINE TRANSIENT RESPONSE

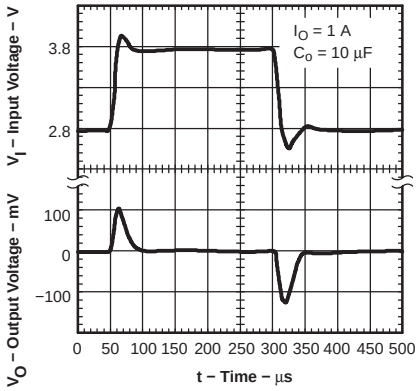

Figure 8.

TPS72518
LOAD TRANSIENT RESPONSE

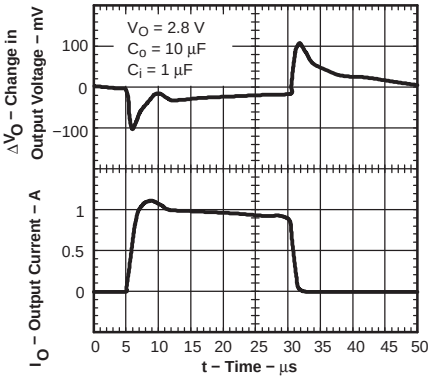

Figure 9.

TYPICAL CHARACTERISTICS (continued)

TPS72518 LOAD TRASIENT RESPONSE

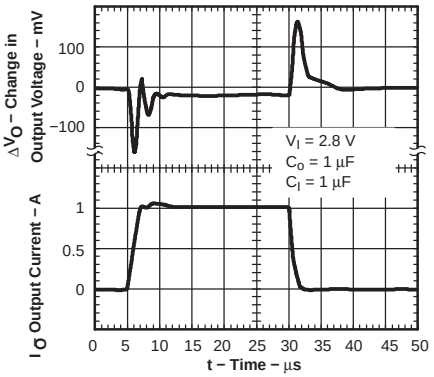

Figure 10.

TPS72518 OUTPUT VOLTAGE, ENABLE VOLTAGE vs TIME (START-UP)

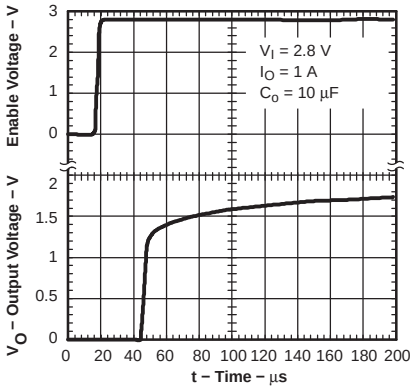

Figure 11.

TPS72518 POWER UP/POWER DOWN

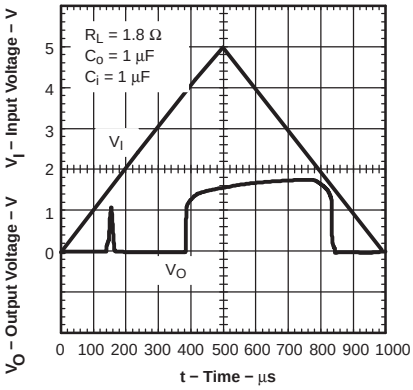

Figure 12.

TPS72518 OUTPUT SPECTRAL NOISE DENSITY vs FREQUENCY

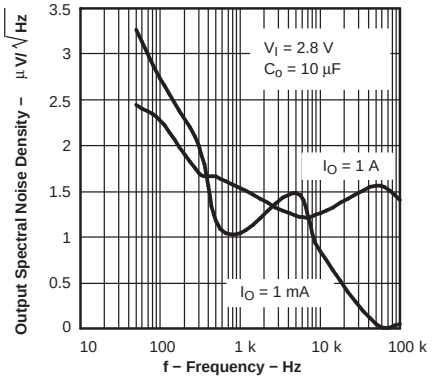

Figure 13.

TPS72518 RIPPLE REJECTION vs FREQUENCY

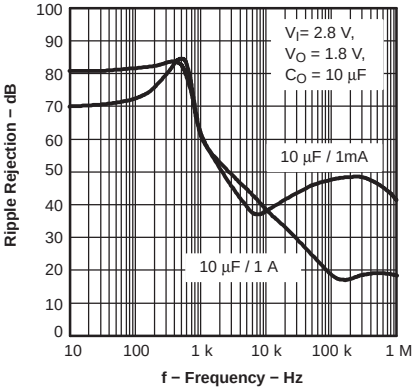

Figure 14.

CURRENT LIMIT vs INPUT VOLTAGE

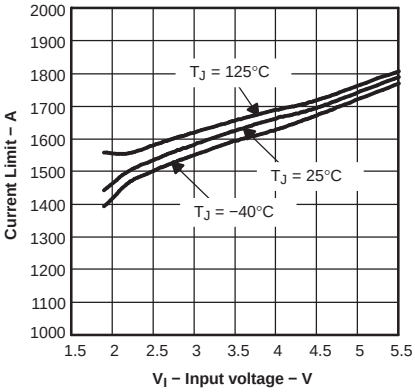

Figure 15.

TPS72515 GROUND CURRENT vs INPUT VOLTAGE

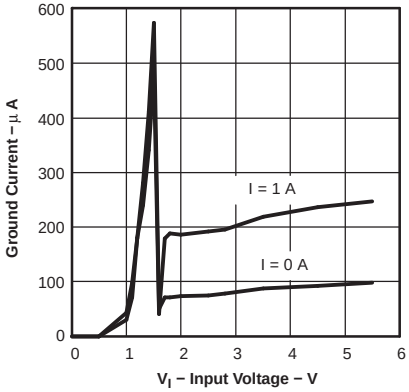

Figure 16.

DROPOUT VOLTAGE vs INPUT VOLTAGE

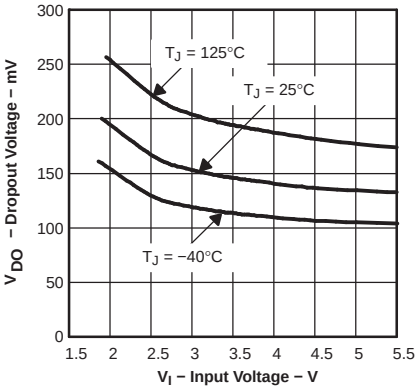

Figure 17.

Copyright © 2002–2010, Texas Instruments Incorporated

APPLICATION INFORMATION

The TPS725xx family of low-dropout (LDO) regulators has numerous features that make it applicable to a wide range of applications. The family operates with very low input voltage (≥1.8 V) and low dropout voltage (typically 200 mV at full load), making it an efficient stand-alone power supply or post regulator for battery or switch mode power supplies. Both the active low $\overline{\text{RESET}}$ and 1-A output current make the TPS725xx family ideal for powering processor and FPGA supplies. The TPS725xx family also has low output noise (typically 150 μV_{RMS} with 10-µF output capacitor), making it ideal for use in telecom equipment.

External Capacitor Requirements

A 1-µF or larger ceramic input bypass capacitor, connected between IN and GND and located close to the TPS725xx, is required for stability. To improve transient response, noise rejection, and ripple rejection, an additional 10-µF or larger, low ESR capacitor is recommended. A higher-value, low ESR input capacitor may be necessary if large, fast-rise-time load transients are anticipated and the device is located several inches from the power source, especially if the minimum input voltage of 1.8 V is used.

Although an output capacitor is not required for stability, transient response and output noise are improved with a 10-µF output capacitor.

Programming the TPS72501 Adjustable LDO Regulator

The output voltage of the TPS72501 adjustable regulator is programmed using an external resistor divider as shown in Figure 18. The output voltage is calculated using:

$$V_O = V_{ref} \times \left(1 + \frac{R1}{R2}\right) \tag{1}$$

Where:

- $V_{FB} = V_{REF} = 1.22$ V typical (see the electrical characteristics for V_{REF} range)

Resistors R1 and R2 should be chosen for approximately 10-µA divider current. Lower value resistors offer no inherent advantage and waste more power. Higher values should be avoided as leakage currents at FB increase the output voltage error. The recommended design procedure is to choose R2 = 120 kΩ to set the divider current at 10 µA and then calculate R1 using:

$$R1 = \left(\frac{V_O}{V_{ref}} - 1\right) \times R2 \tag{2}$$

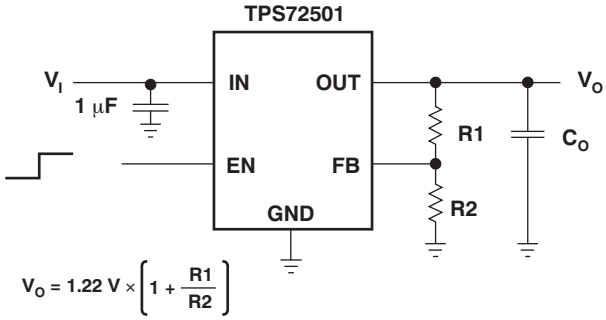

Figure 18. TPS72501 Adjustable Typical Application Diagram

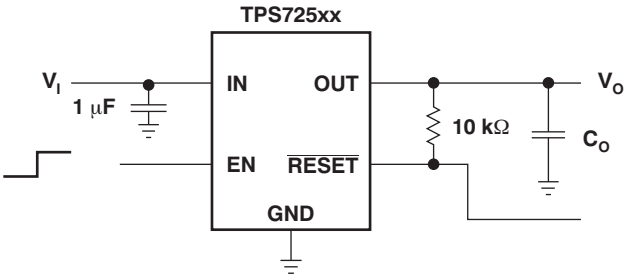

Figure 19. TPS72501 Fixed Output Typical Application Diagram

Table 1. Output Voltage Programming Guide (Standard 1% Resistor Values)

PROGRAM VOLTAGE	R1 (kΩ)	R2 (kΩ)	ACTUAL VOLTAGE
1.8 V	56.2	118	1.801
2.5 V	127	121	2.5
3.3 V	196	115	3.299
3.6 V	205	105	3.602

Regulator Protection

The TPS725xx pass element has a built-in back diode that safely conducts reverse current when the input voltage drops below the output voltage (e.g., during power down). Current is conducted from the output to the input and is not internally limited. If extended reverse voltage is anticipated, external limiting might be appropriate.

The TPS725xx also features internal current limiting and thermal protection. During normal operation, the TPS725xx limits output current to approximately 1.6 A. When current limiting engages, the output voltage scales back linearly until the overcurrent condition ends. While current limiting is designed to prevent gross device failure, care should be taken not to exceed the power dissipation ratings of the package. If the temperature of the device exceeds 165°C, thermal-protection circuitry shuts it down. Once the device has cooled down to below 145°C, regulator operation resumes.

Copyright © 2002–2010, Texas Instruments Incorporated

THERMAL INFORMATION

The amount of heat that an LDO linear regulator generates is directly proportional to the amount of power it dissipates during operation. All integrated circuits have a maximum allowable junction temperature ($T_J$max) above which normal operation is not assured. A system designer must design the operating environment so that the operating junction temperature (T_J) does not exceed the maximum junction temperature ($T_J$max). The two main environmental variables that a designer can use to improve thermal performance are air flow and external heatsinks. The purpose of this information is to aid the designer in determining the proper operating environment for a linear regulator that is operating at a specific power level.

In general, the maximum expected power ($P_{D(max)}$) consumed by a linear regulator is computed as:

$$P_D max = \left(V_{I(avg)} - V_{O(avg)}\right) \times I_{O(avg)} + V_{I(avg)} \times I_{(Q)} \tag{3}$$

Where:

- $V_{I(avg)}$ is the average input voltage.
- $V_{O(avg)}$ is the average output voltage.
- $I_{O(avg)}$ is the average output current.
- $I_{(Q)}$ is the quiescent current.

For most TI LDO regulators, the quiescent current is insignificant compared to the average output current; therefore, the term $V_{I(avg)} \times I_{(Q)}$ can be neglected. The operating junction temperature is computed by adding the ambient temperature (T_A) and the increase in temperature due to the regulator's power dissipation. The temperature rise is computed by multiplying the maximum expected power dissipation by the sum of the thermal resistances between the junction and the case ($R_{\theta JC}$), the case to heatsink ($R_{\theta CS}$), and the heatsink to ambient ($R_{\theta SA}$). Thermal resistances are measures of how effectively an object dissipates heat. Typically, the larger the device, the more surface area available for power dissipation and the lower the object's thermal resistance.

Figure 20 illustrates these thermal resistances for (a) a SOT223 package mounted in a JEDEC low-K board, and (b) a DDPAK package mounted on a JEDEC high-K board.

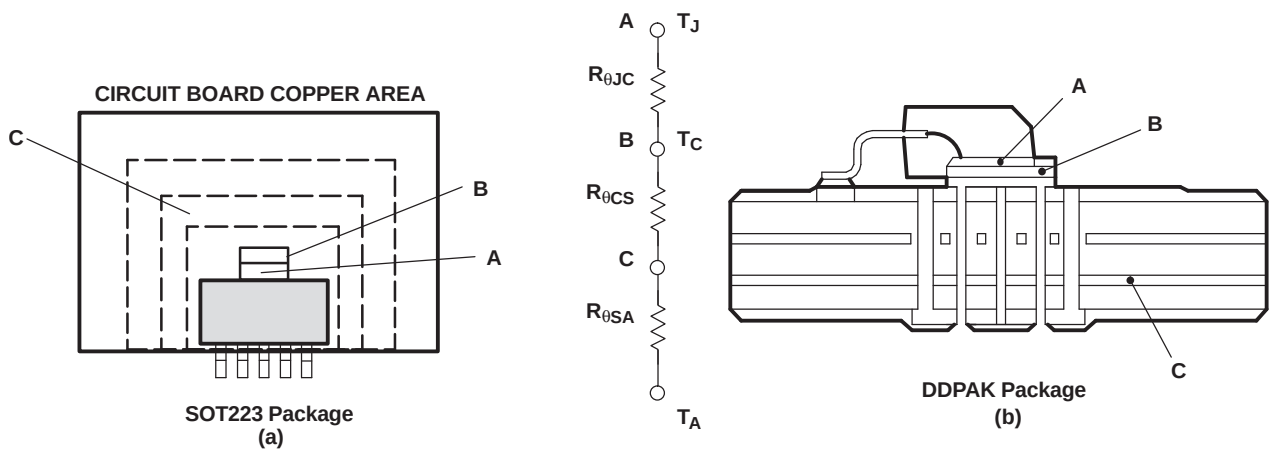

Figure 20. Thermal Resistances

Equation 4 summarizes the computation:

$$T_J = T_A + P_D max \times \left(R_{\theta JC} + R_{\theta CS} + R_{\theta SA}\right) \tag{4}$$

The $R_{\theta JC}$ is specific to each regulator as determined by its package, lead frame, and die size provided in the regulator's data sheet. The $R_{\theta SA}$ is a function of the type and size of heatsink. For example, *black body radiator* type heatsinks can have $R_{\theta CS}$ values ranging from 5°C/W for very large heatsinks to 50°C/W for very small heatsinks. The $R_{\theta CS}$ is a function of how the package is attached to the heatsink. For example, if a thermal compound is used to attach a heatsink to a SOT223 package, $R_{\theta CS}$of 1°C/W is reasonable.

Copyright © 2002–2010, Texas Instruments Incorporated

Even if no external *black body radiator* type heatsink is attached to the package, the board on which the regulator is mounted provides some heatsinking through the pin solder connections. Some packages, like the DDPAK and SOT223 packages, use a copper plane underneath the package or the circuit board's ground plane for additional heatsinking to improve their thermal performance. Computer-aided thermal modeling can be used to compute very accurate approximations of an integrated circuit's thermal performance in different operating environments (e.g., different types of circuit boards, different types and sizes of heatsinks, different air flows, etc.). Using these models, the three thermal resistances can be combined into one thermal resistance between junction and ambient ($R_{\theta JA}$). This $R_{\theta JA}$is valid only for the specific operating environment used in the computer model.

Equation 4 simplifies into Equation 5:

$$T_J = T_A + P_D max \times R_{\theta JA} \tag{5}$$

Rearranging Equation 5 gives Equation 6:

$$R_{\theta JA} = \frac{T_J - T_A}{P_D max} \tag{6}$$

Using Equation 5 and the computer model generated curves shown in Figure 21 and Figure 24, a designer can quickly compute the required heatsink thermal resistance/board area for a given ambient temperature, power dissipation, and operating environment.

DDPAK Power Dissipation

The DDPAK package provides an effective means of managing power dissipation in surface mount applications. The DDPAK package dimensions are provided in the *Mechanical Data* section at the end of the data sheet. The addition of a copper plane directly underneath the DDPAK package enhances the thermal performance of the package.

To illustrate, the TPS72525 in a DDPAK package was chosen. For this example, the average input voltage is 5 V, the output voltage is 2.5 V, the average output current is 1 A, the ambient temperature 55°C, the air flow is 150 LFM, and the operating environment is the same as documented below. Neglecting the quiescent current, the maximum average power is:

$$P_D max = (5 - 2.5)\ V \times 1\ A = 2.5\ W \tag{7}$$

Substituting $T_J$max for T_J into Equation 6 gives Equation 8:

$$R_{\theta JA} max = (125 - 55)°C/2.5\ W = 28°C/W \tag{8}$$

From Figure 21, DDPAK Thermal Resistance vs Copper Heatsink Area, the ground plane needs to be 1 cm^2 for the part to dissipate 2.5 W. The operating environment used in the computer model to construct Figure 21 consisted of a standard JEDEC High-K board (2S2P) with a 1 oz. internal copper plane and ground plane. The package is soldered to a 2 oz. copper pad. The pad is tied through thermal vias to the 1 oz. ground plane. Figure 22 shows the side view of the operating environment used in the computer model.

Copyright © 2002–2010, Texas Instruments Incorporated

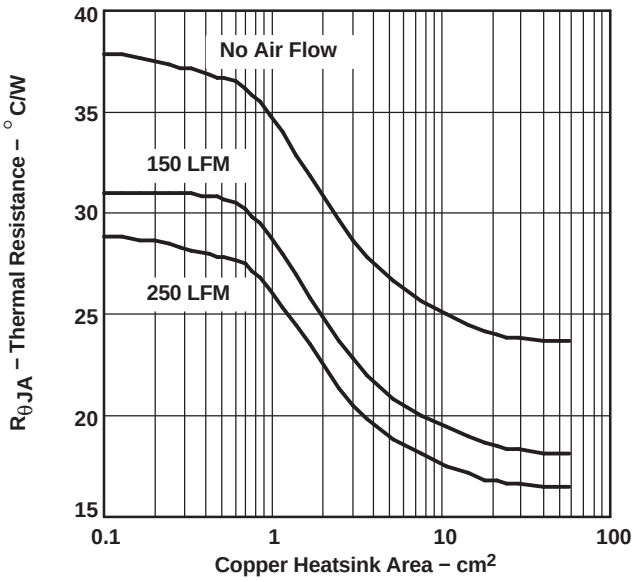

Figure 21. DDPAK Thermal Resistance vs Copper Heatsink Area

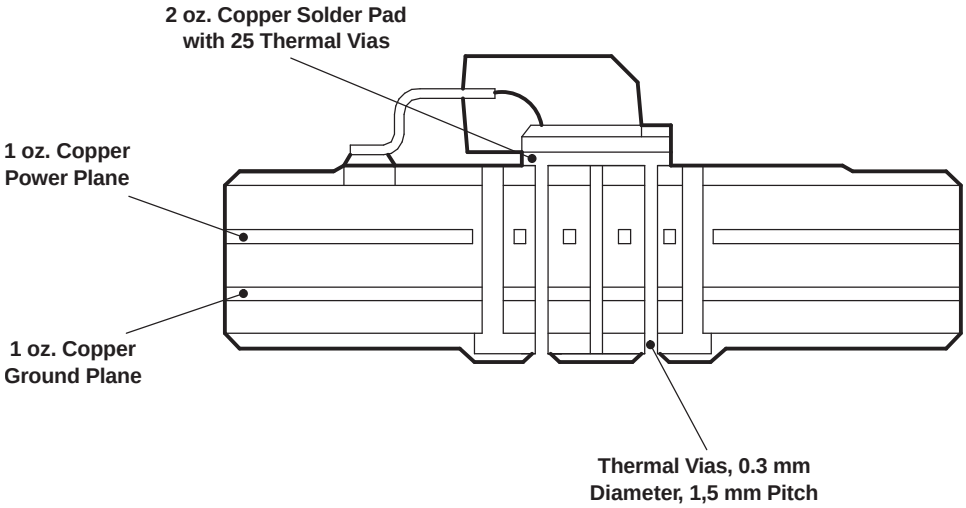

Figure 22. DDPAK Thermal Resistance

From the data in Figure 23 and rearranging Equation 6, the maximum power dissipation for a different ground plane area and a specific ambient temperature can be computed.

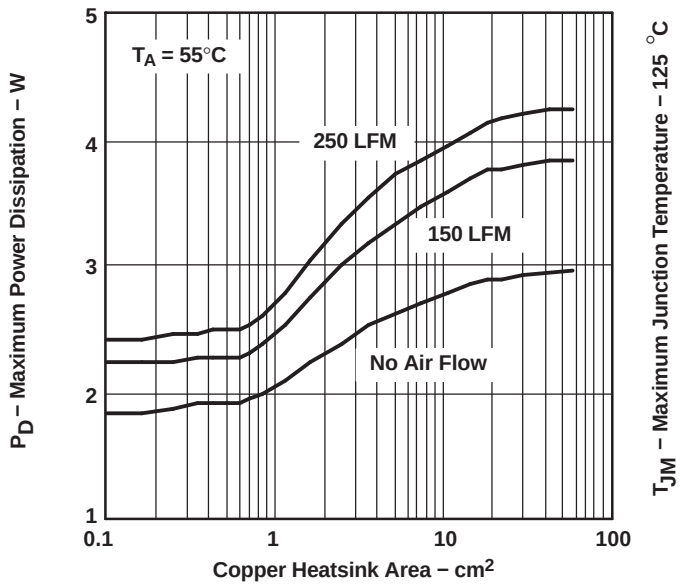

Figure 23. Maximum Power Dissipation vs Copper Heatsink Area

SOT223 Power Dissipation

The SOT223 package provides an effective means of managing power dissipation in surface mount applications. The SOT223 package dimensions are provided in the *Mechanical Data* section at the end of the data sheet. The addition of a copper plane directly underneath the SOT223 package enhances the thermal performance of the package.

To illustrate, the TPS72525 in a SOT223 package was chosen. For this example, the average input voltage is 3.3 V, the output voltage is 2.5 V, the average output current is 1 A, the ambient temperature 55°C, no air flow is present, and the operating environment is the same as documented below. Neglecting the quiescent current, the maximum average power is:

$$P_D max = (3.3 - 2.5)\ V \times 1\ A = 800\ mW \tag{9}$$

Substituting $T_J$max for T_J into Equation 6 gives Equation 10:

$$R_{\theta JA} max = (125 - 55)°C/800\ mW = 87.5°C/W \tag{10}$$

From Figure 24, $R_{\Theta JA}$ vs PCB Copper Area, the ground plane needs to be 0.55 in^2 for the part to dissipate 800 mW. The operating environment used to construct Figure 24 consisted of a board with 1 oz. copper planes. The package is soldered to a 1 oz. copper pad on the top of the board. The pad is tied through thermal vias to the 1 oz. ground plane.

Copyright © 2002–2010, Texas Instruments Incorporated

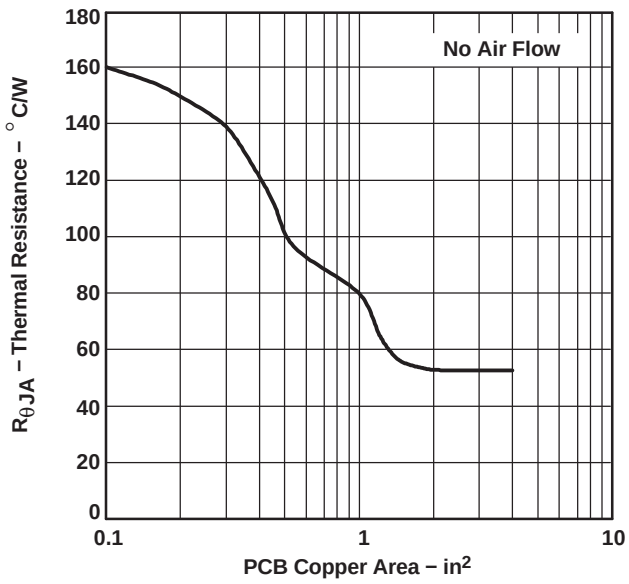

Figure 24. SOT223 Thermal Resistance vs PCB AREA

From the data in Figure 24 and rearranging Equation 6, the maximum power dissipation for a different ground plane area and a specific ambient temperature can be computed (as shown in Figure 25).

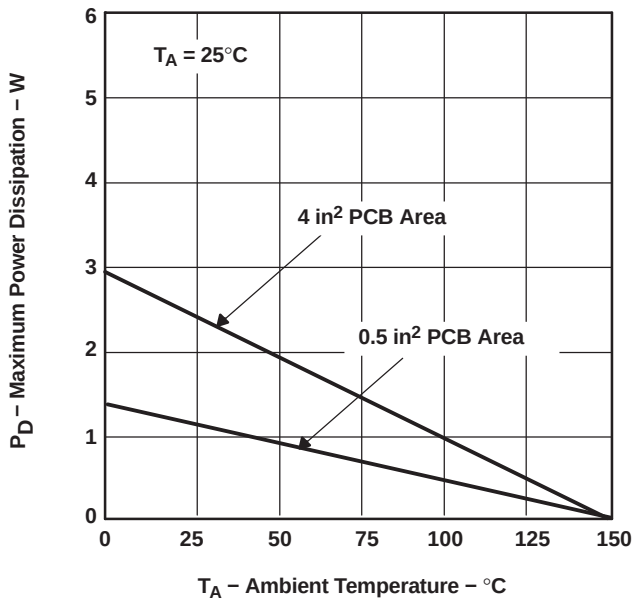

Figure 25. SOT223 Power Dissipation

REVISION HISTORY

NOTE: Page numbers for previous revisions may differ from page numbers in the current version.

Changes from Revision D (March 2004) to Revision E	Page
• Deleted Figure 14, *Output Impedance vs Frequency*	8
• Updated Figure 18	9
• Added Figure 19	10
• Added Table 1, *Output Voltage Programming Guide*	10

Copyright © 2002–2010, Texas Instruments Incorporated

PACKAGING INFORMATION

Orderable Device	Status (1)	Package Type	Package Drawing	Pins	Package Qty	Eco Plan (2)	Lead finish/ Ball material (6)	MSL Peak Temp (3)	Op Temp (°C)	Device Marking (4/5)	Samples
TPS72501DCQ	ACTIVE	SOT-223	DCQ	6	78	RoHS & Green	NIPDAU	Level-2-260C-1 YEAR	-40 to 125	PS72501	Samples
TPS72501DCQR	ACTIVE	SOT-223	DCQ	6	2500	RoHS & Green	NIPDAU	Level-2-260C-1 YEAR	-40 to 125	PS72501	Samples
TPS72501DCQRG4	ACTIVE	SOT-223	DCQ	6	2500	RoHS & Green	NIPDAU	Level-2-260C-1 YEAR	-40 to 125	PS72501	Samples
TPS72501KTTR	ACTIVE	DDPAK/ TO-263	KTT	5	500	RoHS & Green	Call TI | SN	Level-2-260C-1 YEAR	-40 to 125	TPS 72501	Samples
TPS72501KTTRG3	ACTIVE	DDPAK/ TO-263	KTT	5	500	RoHS & Green	SN	Level-2-260C-1 YEAR	-40 to 125	TPS 72501	Samples
TPS72515DCQ	ACTIVE	SOT-223	DCQ	6	78	RoHS & Green	NIPDAU	Level-2-260C-1 YEAR	-40 to 125	PS72515	Samples
TPS72515DCQG4	ACTIVE	SOT-223	DCQ	6	78	RoHS & Green	NIPDAU	Level-2-260C-1 YEAR	-40 to 125	PS72515	Samples
TPS72515DCQR	ACTIVE	SOT-223	DCQ	6	2500	RoHS & Green	NIPDAU	Level-2-260C-1 YEAR	-40 to 125	PS72515	Samples
TPS72515DCQRG4	ACTIVE	SOT-223	DCQ	6	2500	RoHS & Green	NIPDAU	Level-2-260C-1 YEAR	-40 to 125	PS72515	Samples
TPS72515KTTR	ACTIVE	DDPAK/ TO-263	KTT	5	500	RoHS & Green	Call TI | SN	Level-2-260C-1 YEAR	-40 to 125	TPS 72515	Samples
TPS72516DCQ	ACTIVE	SOT-223	DCQ	6	78	RoHS & Green	NIPDAU	Level-2-260C-1 YEAR	-40 to 125	PS72516	Samples
TPS72516DCQR	ACTIVE	SOT-223	DCQ	6	2500	RoHS & Green	NIPDAU	Level-2-260C-1 YEAR	-40 to 125	PS72516	Samples
TPS72516KTTT	ACTIVE	DDPAK/ TO-263	KTT	5	50	RoHS & Green	Call TI | SN	Level-2-260C-1 YEAR	-40 to 125	TPS 72516	Samples
TPS72518DCQ	ACTIVE	SOT-223	DCQ	6	78	RoHS & Green	NIPDAU	Level-2-260C-1 YEAR	-40 to 125	PS72518	Samples
TPS72518DCQG4	ACTIVE	SOT-223	DCQ	6	78	RoHS & Green	NIPDAU	Level-2-260C-1 YEAR	-40 to 125	PS72518	Samples
TPS72518DCQR	ACTIVE	SOT-223	DCQ	6	2500	RoHS & Green	NIPDAU	Level-2-260C-1 YEAR	-40 to 125	PS72518	Samples
TPS72518DCQRG4	ACTIVE	SOT-223	DCQ	6	2500	RoHS & Green	NIPDAU	Level-2-260C-1 YEAR	-40 to 125	PS72518	Samples
TPS72518KTTR	ACTIVE	DDPAK/ TO-263	KTT	5	500	RoHS & Green	Call TI | SN	Level-2-260C-1 YEAR	-40 to 125	TPS 72518	Samples
TPS72525DCQ	ACTIVE	SOT-223	DCQ	6	78	RoHS & Green	NIPDAU	Level-2-260C-1 YEAR	-40 to 125	PS72525	Samples

Orderable Device	Status (1)	Package Type	Package Drawing	Pins	Package Qty	Eco Plan (2)	Lead finish/ Ball material (6)	MSL Peak Temp (3)	Op Temp (°C)	Device Marking (4/5)	Samples
TPS72525DCQR	ACTIVE	SOT-223	DCQ	6	2500	RoHS & Green	NIPDAU	Level-2-260C-1 YEAR	-40 to 125	PS72525	Samples
TPS72525DCQRG4	ACTIVE	SOT-223	DCQ	6	2500	RoHS & Green	NIPDAU	Level-2-260C-1 YEAR	-40 to 125	PS72525	Samples
TPS72525KTTR	ACTIVE	DDPAK/ TO-263	KTT	5	500	RoHS & Green	Call TI | SN	Level-2-260C-1 YEAR	-40 to 125	TPS 72525	Samples
TPS72525KTTRG3	ACTIVE	DDPAK/ TO-263	KTT	5	500	RoHS & Green	SN	Level-2-260C-1 YEAR	-40 to 125	TPS 72525	Samples

(1) The marketing status values are defined as follows:
ACTIVE: Product device recommended for new designs.
LIFEBUY: TI has announced that the device will be discontinued, and a lifetime-buy period is in effect.
NRND: Not recommended for new designs. Device is in production to support existing customers, but TI does not recommend using this part in a new design.
PREVIEW: Device has been announced but is not in production. Samples may or may not be available.
OBSOLETE: TI has discontinued the production of the device.

(2) **RoHS:** TI defines "RoHS" to mean semiconductor products that are compliant with the current EU RoHS requirements for all 10 RoHS substances, including the requirement that RoHS substance do not exceed 0.1% by weight in homogeneous materials. Where designed to be soldered at high temperatures, "RoHS" products are suitable for use in specified lead-free processes. TI may reference these types of products as "Pb-Free".
RoHS Exempt: TI defines "RoHS Exempt" to mean products that contain lead but are compliant with EU RoHS pursuant to a specific EU RoHS exemption.
Green: TI defines "Green" to mean the content of Chlorine (Cl) and Bromine (Br) based flame retardants meet JS709B low halogen requirements of <=1000ppm threshold. Antimony trioxide based flame retardants must also meet the <=1000ppm threshold requirement.

(3) MSL, Peak Temp. - The Moisture Sensitivity Level rating according to the JEDEC industry standard classifications, and peak solder temperature.

(4) There may be additional marking, which relates to the logo, the lot trace code information, or the environmental category on the device.

(5) Multiple Device Markings will be inside parentheses. Only one Device Marking contained in parentheses and separated by a "~" will appear on a device. If a line is indented then it is a continuation of the previous line and the two combined represent the entire Device Marking for that device.

(6) Lead finish/Ball material - Orderable Devices may have multiple material finish options. Finish options are separated by a vertical ruled line. Lead finish/Ball material values may wrap to two lines if the finish value exceeds the maximum column width.

Important Information and Disclaimer: The information provided on this page represents TI's knowledge and belief as of the date that it is provided. TI bases its knowledge and belief on information provided by third parties, and makes no representation or warranty as to the accuracy of such information. Efforts are underway to better integrate information from third parties. TI has taken and continues to take reasonable steps to provide representative and accurate information but may not have conducted destructive testing or chemical analysis on incoming materials and chemicals. TI and TI suppliers consider certain information to be proprietary, and thus CAS numbers and other limited information may not be available for release.

In no event shall TI's liability arising out of such information exceed the total purchase price of the TI part(s) at issue in this document sold by TI to Customer on an annual basis.

TAPE AND REEL INFORMATION

REEL DIMENSIONS

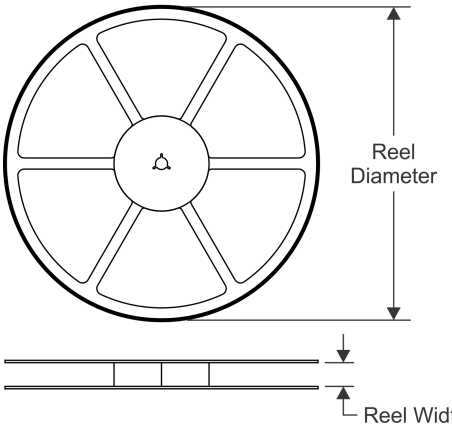

TAPE DIMENSIONS

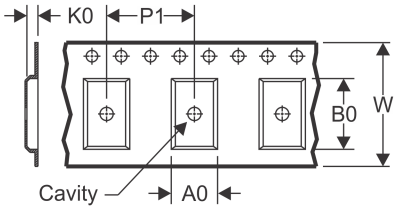

A0	Dimension designed to accommodate the component width
B0	Dimension designed to accommodate the component length
K0	Dimension designed to accommodate the component thickness
W	Overall width of the carrier tape
P1	Pitch between successive cavity centers

QUADRANT ASSIGNMENTS FOR PIN 1 ORIENTATION IN TAPE

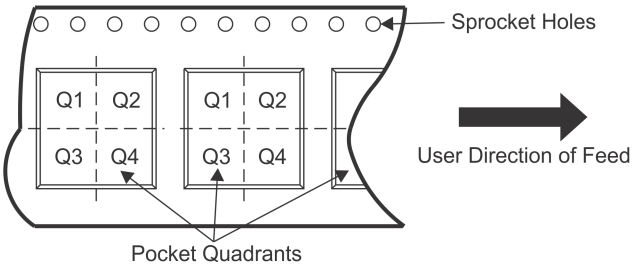

*All dimensions are nominal

Device	Package Type	Package Drawing	Pins	SPQ	Reel Diameter (mm)	Reel Width W1 (mm)	A0 (mm)	B0 (mm)	K0 (mm)	P1 (mm)	W (mm)	Pin1 Quadrant
TPS72501DCQR	SOT-223	DCQ	6	2500	330.0	12.4	7.1	7.45	1.88	8.0	12.0	Q3
TPS72515DCQR	SOT-223	DCQ	6	2500	330.0	12.4	7.1	7.45	1.88	8.0	12.0	Q3
TPS72516DCQR	SOT-223	DCQ	6	2500	330.0	12.4	7.1	7.45	1.88	8.0	12.0	Q3
TPS72518DCQR	SOT-223	DCQ	6	2500	330.0	12.4	7.1	7.45	1.88	8.0	12.0	Q3
TPS72525DCQR	SOT-223	DCQ	6	2500	330.0	12.4	7.1	7.45	1.88	8.0	12.0	Q3

TAPE AND REEL BOX DIMENSIONS

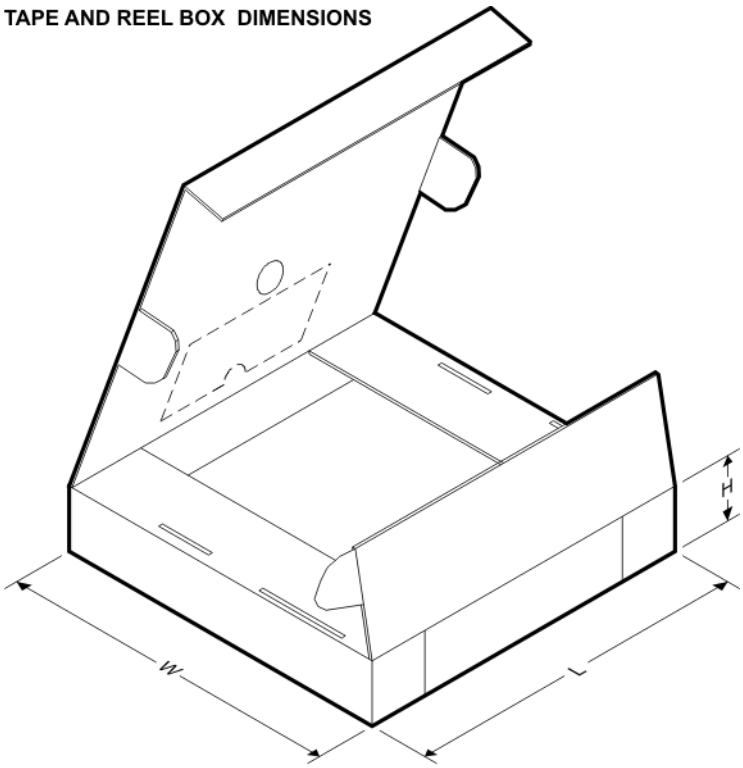

*All dimensions are nominal

Device	Package Type	Package Drawing	Pins	SPQ	Length (mm)	Width (mm)	Height (mm)
TPS72501DCQR	SOT-223	DCQ	6	2500	346.0	346.0	29.0
TPS72515DCQR	SOT-223	DCQ	6	2500	346.0	346.0	29.0
TPS72516DCQR	SOT-223	DCQ	6	2500	346.0	346.0	41.0
TPS72518DCQR	SOT-223	DCQ	6	2500	346.0	346.0	29.0
TPS72525DCQR	SOT-223	DCQ	6	2500	346.0	346.0	29.0

TUBE

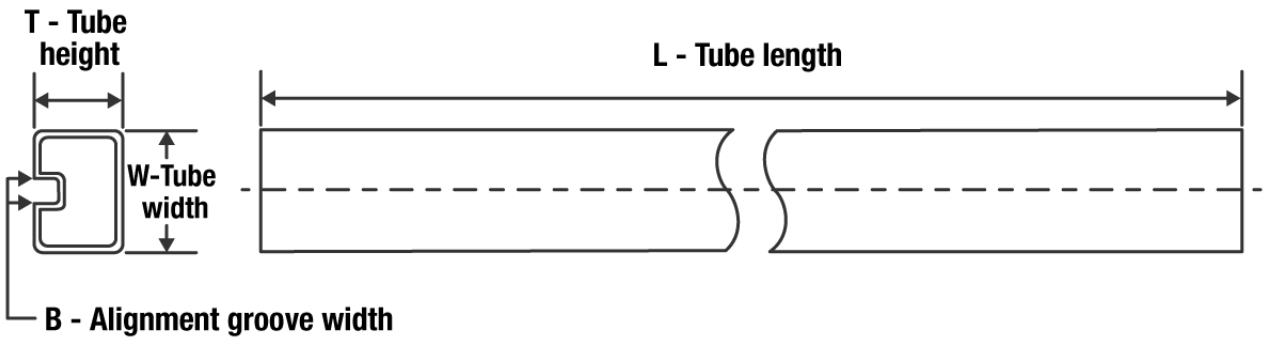

*All dimensions are nominal

Device	Package Name	Package Type	Pins	SPQ	L (mm)	W (mm)	T (µm)	B (mm)
TPS72501DCQ	DCQ	SOT-223	6	78	532.13	8.63	3.6	3.68
TPS72515DCQ	DCQ	SOT-223	6	78	532.13	8.63	3.6	3.68
TPS72515DCQG4	DCQ	SOT-223	6	78	532.13	8.63	3.6	3.68
TPS72516DCQ	DCQ	SOT-223	6	78	532.13	8.63	3.6	3.68
TPS72518DCQ	DCQ	SOT-223	6	78	532.13	8.63	3.6	3.68
TPS72518DCQG4	DCQ	SOT-223	6	78	532.13	8.63	3.6	3.68
TPS72525DCQ	DCQ	SOT-223	6	78	532.13	8.63	3.6	3.68

DCQ0006A

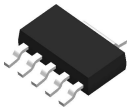

PACKAGE OUTLINE

SOT - 1.8 mm max height

PLASTIC SMALL OUTLINE

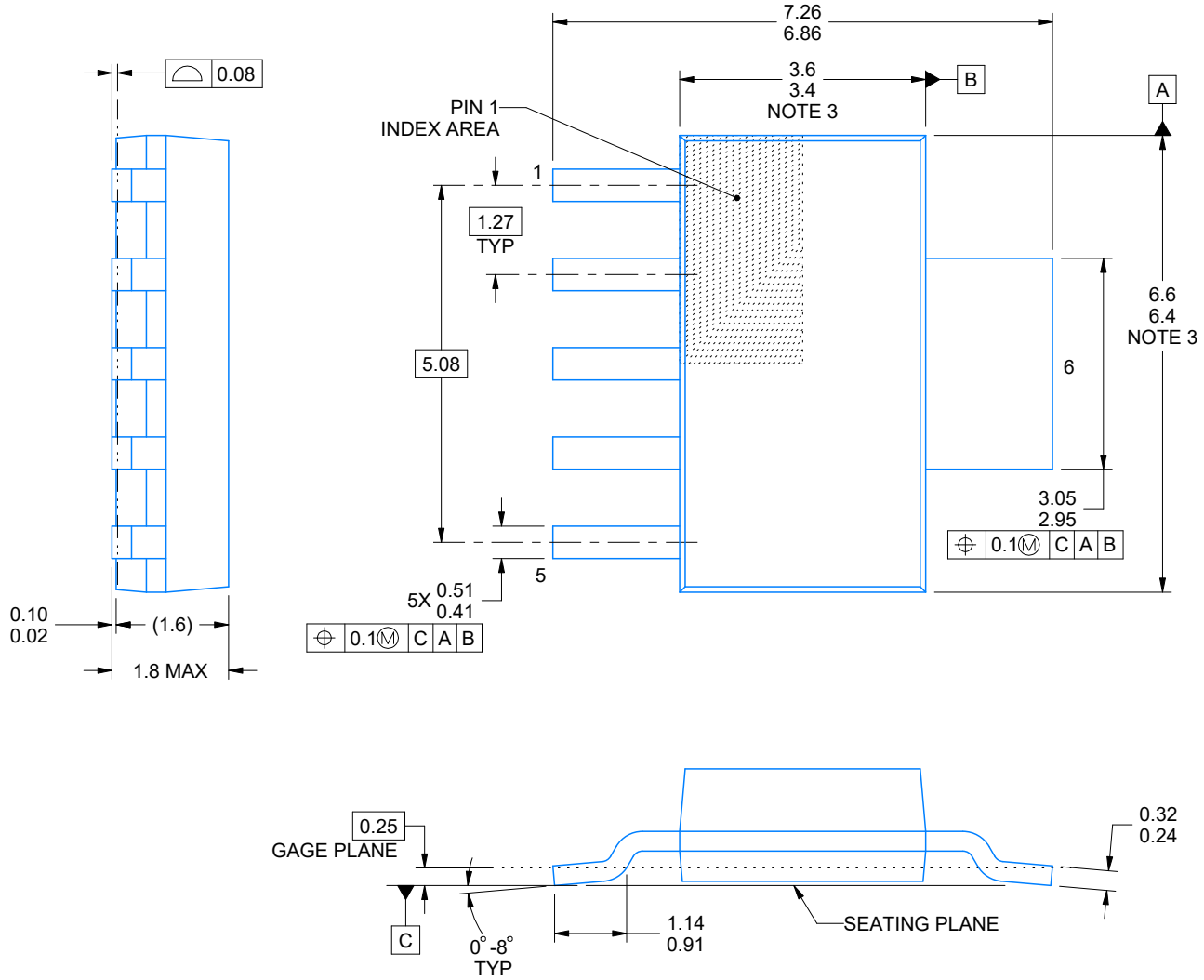

4214845/C 11/2021

NOTES:

1. All linear dimensions are in millimeters. Any dimensions in parenthesis are for reference only. Dimensioning and tolerancing per ASME Y14.5M.
2. This drawing is subject to change without notice.
3. This dimension does not include mold flash, protrusions, or gate burrs. Mold flash, protrusions, or gate burrs shall not exceed 0.15 mm per side.

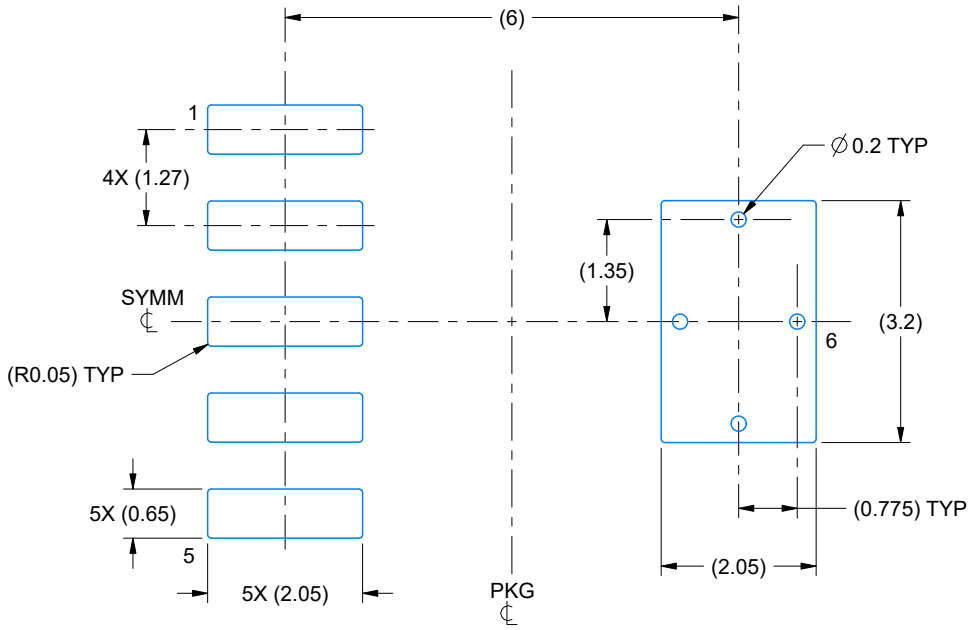

LAND PATTERN EXAMPLE
EXPOSED METAL SHOWN
SCALE: 10X

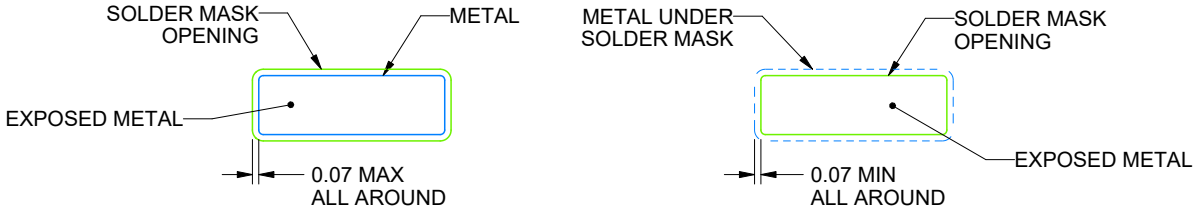

SOLDER MASK DETAILS

4214845/C 11/2021

NOTES: (continued)

4. Publication IPC-7351 may have alternate designs.
5. Solder mask tolerances between and around signal pads can vary based on board fabrication site.
6. Vias are optional depending on application, refer to device data sheet. If any vias are implemented, refer to their locations shown on this view. It is recommended that vias under paste be filled, plugged or tented.

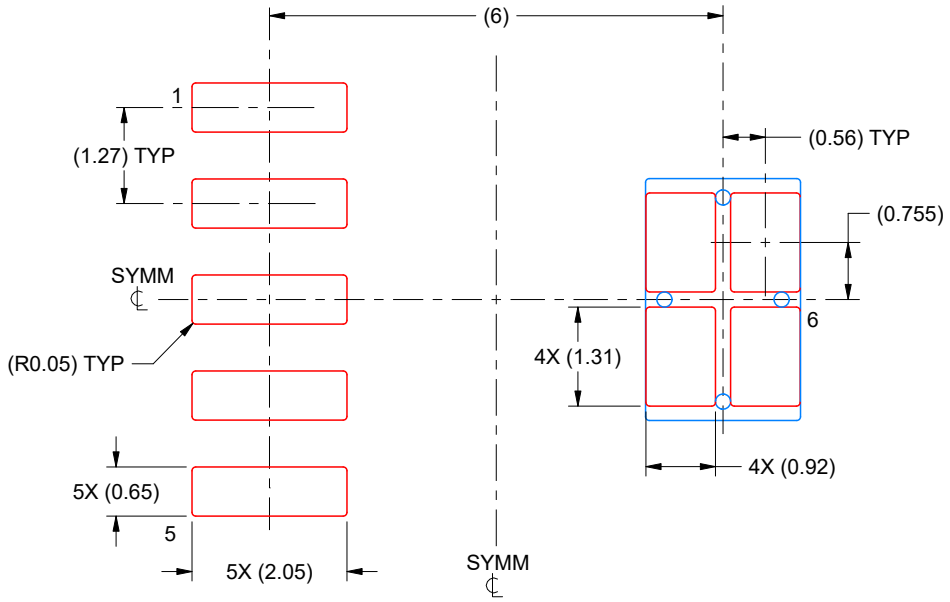

SOLDER PASTE EXAMPLE
BASED ON 0.125 mm THICK STENCIL
SCALE: 10X

4214845/C 11/2021

NOTES: (continued)

7. Laser cutting apertures with trapezoidal walls and rounded corners may offer better paste release. IPC-7525 may have alternate design recommendations.
8. Board assembly site may have different recommendations for stencil design.

KTT (R–PSFM–G5) PLASTIC FLANGE–MOUNT PACKAGE

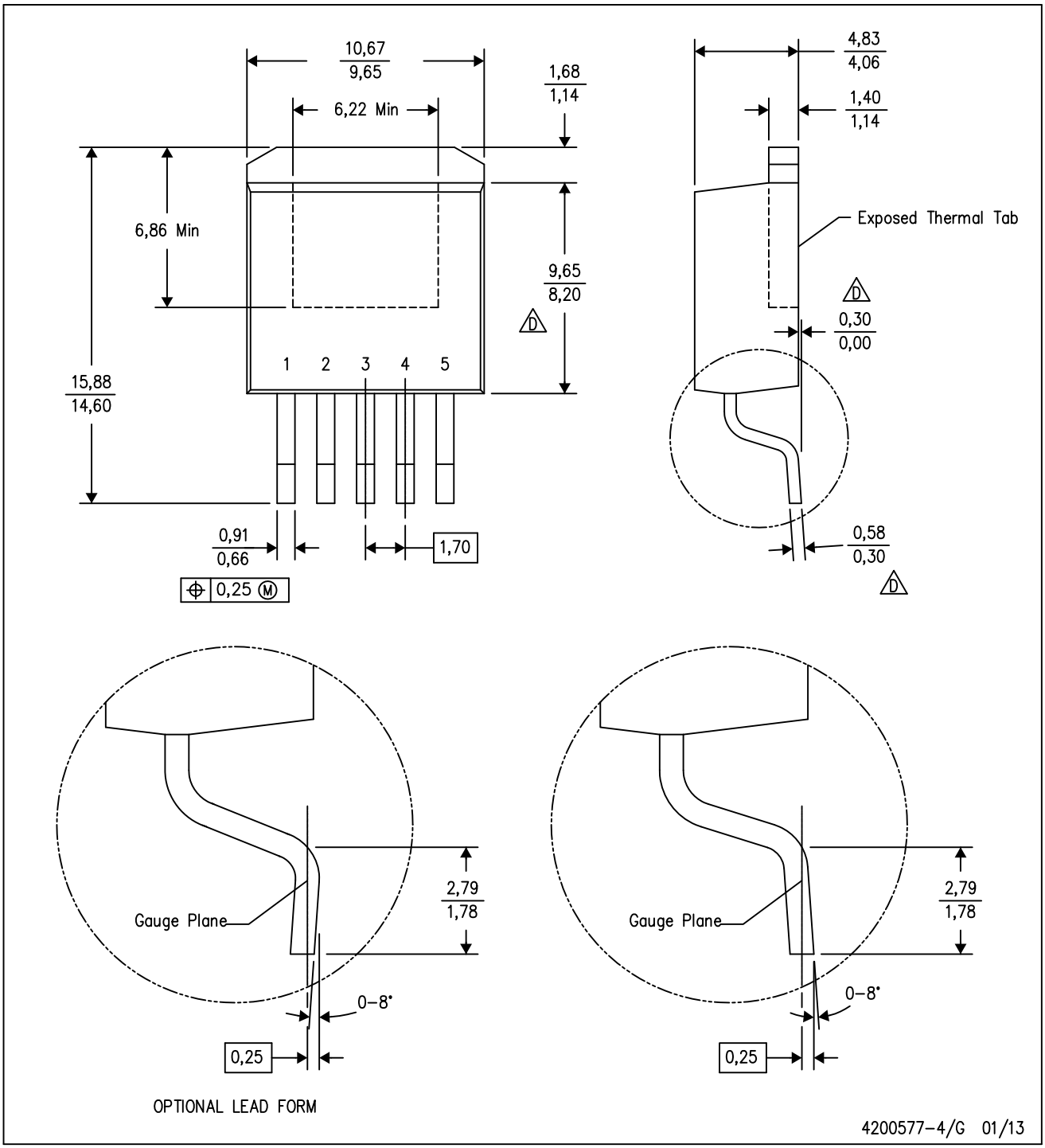

NOTES:
A. All linear dimensions are in millimeters.
B. This drawing is subject to change without notice.
C. Body dimensions do not include mold flash or protrusion. Mold flash or protrusion not to exceed 0.005 (0,13) per side.
D. Falls within JEDEC TO–263 variation BA, except minimum lead thickness, maximum seating height, and minimum body length.

KTT (R–PSFM–G5) PLASTIC FLANGE–MOUNT PACKAGE

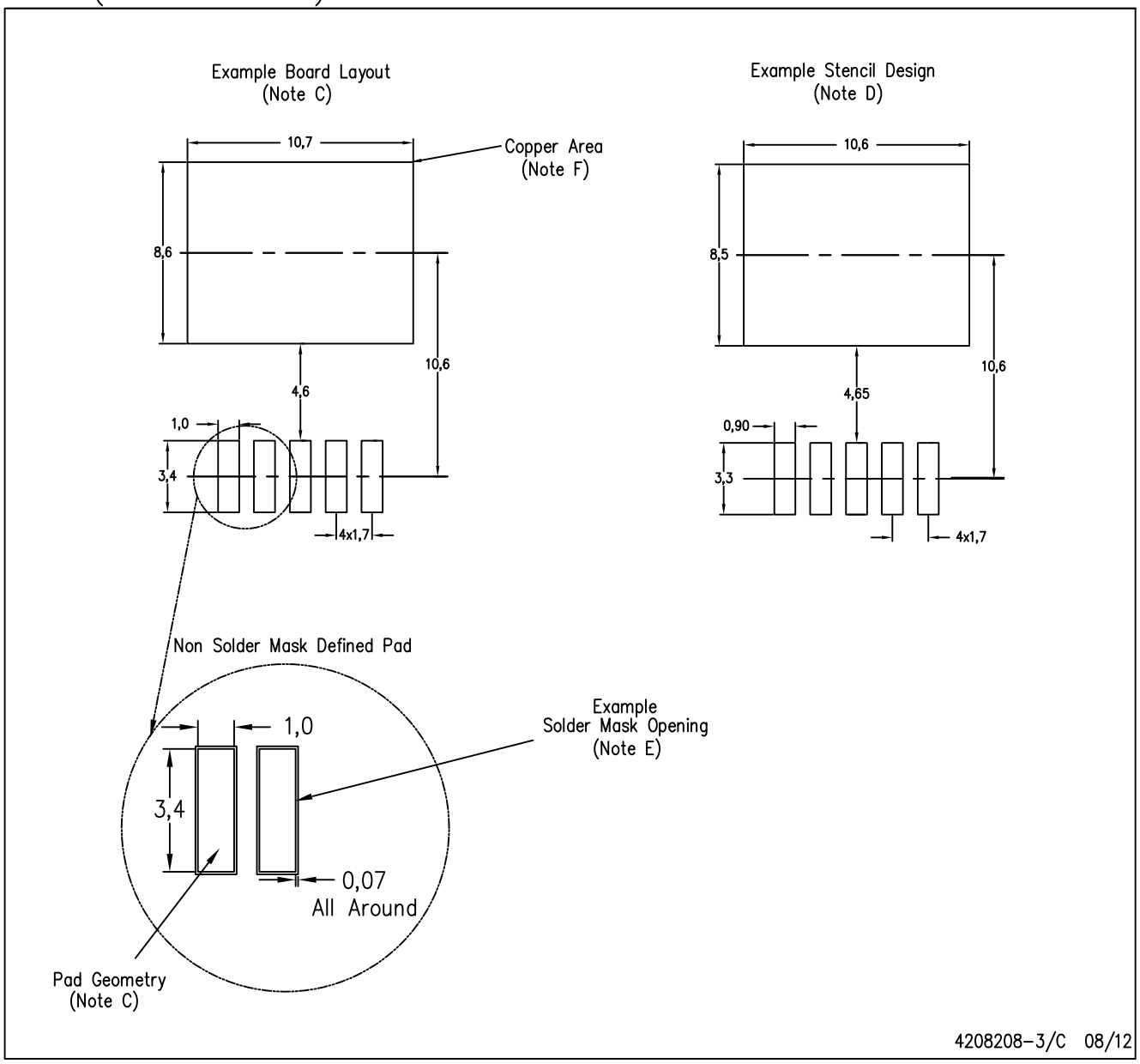

NOTES:
A. All linear dimensions are in millimeters.
B. This drawing is subject to change without notice.
C. Publication IPC–SM–782 is recommended for alternate designs.
D. Laser cutting apertures with trapezoidal walls and also rounding corners will offer better paste release. Customers should contact their board assembly site for stencil design recommendations. Refer to IPC–7525.
E. Customers should contact their board fabrication site for solder mask tolerances between and around signal pads.
F. This package is designed to be soldered to a thermal pad on the board. Refer to the Product Datasheet for specific thermal information, via requirements, and recommended thermal pad size. For thermal pad sizes larger than shown a solder mask defined pad is recommended in order to maintain the solderable pad geometry while increasing copper area.

IMPORTANT NOTICE AND DISCLAIMER

TI PROVIDES TECHNICAL AND RELIABILITY DATA (INCLUDING DATA SHEETS), DESIGN RESOURCES (INCLUDING REFERENCE DESIGNS), APPLICATION OR OTHER DESIGN ADVICE, WEB TOOLS, SAFETY INFORMATION, AND OTHER RESOURCES “AS IS” AND WITH ALL FAULTS, AND DISCLAIMS ALL WARRANTIES, EXPRESS AND IMPLIED, INCLUDING WITHOUT LIMITATION ANY IMPLIED WARRANTIES OF MERCHANTABILITY, FITNESS FOR A PARTICULAR PURPOSE OR NON-INFRINGEMENT OF THIRD PARTY INTELLECTUAL PROPERTY RIGHTS.

These resources are intended for skilled developers designing with TI products. You are solely responsible for (1) selecting the appropriate TI products for your application, (2) designing, validating and testing your application, and (3) ensuring your application meets applicable standards, and any other safety, security, regulatory or other requirements.

These resources are subject to change without notice. TI grants you permission to use these resources only for development of an application that uses the TI products described in the resource. Other reproduction and display of these resources is prohibited. No license is granted to any other TI intellectual property right or to any third party intellectual property right. TI disclaims responsibility for, and you will fully indemnify TI and its representatives against, any claims, damages, costs, losses, and liabilities arising out of your use of these resources.

TI’s products are provided subject to TI’s Terms of Sale or other applicable terms available either on ti.com or provided in conjunction with such TI products. TI’s provision of these resources does not expand or otherwise alter TI’s applicable warranties or warranty disclaimers for TI products.

TI objects to and rejects any additional or different terms you may have proposed.

Mailing Address: Texas Instruments, Post Office Box 655303, Dallas, Texas 75265
Copyright © 2022, Texas Instruments Incorporated