MICROPOWER SUPPLY VOLTAGE SUPERVISORS

Check for Samples: TLC7701-EP, TLC7705-EP, TLC7733-EP

FEATURES

- **Power-On Reset Generator**
- **Automatic Reset Generation After Voltage Drop**
- **Precision Voltage Sensor**
- **Temperature-Compensated Voltage Reference**
- **Programmable Delay Time by External Capacitor**
- **Supply Voltage Range . . . 2 V to 6 V**
- **Defined RESET Output from $V_{DD} \geq 1$ V**
- **Power-Down Control Support for Static RAM With Battery Backup**
- **Maximum Supply Current of 16 mA**
- **Power Saving Totem-Pole Outputs**

SUPPORTS DEFENSE, AEROSPACE, AND MEDICAL APPLICATIONS

- **Controlled Baseline**
- **One Assembly/Test Site**
- **One Fabrication Site**
- **Available in Extended (–40°C/125°C and –55°C/125°C), Temperature Ranges**(1)
- **Extended Product Life Cycle**
- **Extended Product-Change Notification**
- **Product Traceability**

(1) Additional temperature ranges available - contact factory

D OR PW PACKAGE
(TOP VIEW)

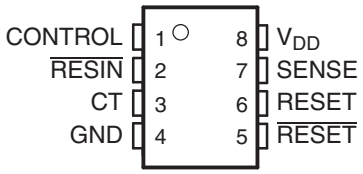

DESCRIPTION

The TLC77xx family of micropower supply voltage supervisors provide reset control, primarily in microcomputer and microprocessor systems.

During power-on, RESET is asserted when V_{DD} reaches 1 V. After minimum V_{DD} (≥ 2 V) is established, the circuit monitors SENSE voltage and keeps the reset outputs active as long as SENSE voltage ($V_{I(SENSE)}$) remains below the threshold voltage. An internal timer delays return of the output to the inactive state to ensure proper system reset. The delay time (t_d) is determined by an external capacitor:

$$t_d = 2.1 \times 10^4 \times C_T \quad (1)$$

Where

C_T is in farads

t_d is in seconds

Except for the TLC7701, which can be customized with two external resistors, each supervisor has a fixed sense threshold voltage set by an internal voltage divider. When SENSE voltage drops below the threshold voltage, the outputs become active and stay in that state until SENSE voltage returns above threshold voltage and the delay time (t_d) has expired.

Please be aware that an important notice concerning availability, standard warranty, and use in critical applications of Texas Instruments semiconductor products and disclaimers thereto appears at the end of this data sheet.

PRODUCTION DATA information is current as of publication date. Products conform to specifications per the terms of the Texas Instruments standard warranty. Production processing does not necessarily include testing of all parameters.

Copyright © 2003–2011, Texas Instruments Incorporated

In addition to the power-on reset and undervoltage-supervisor function, the TLC77xx adds power-down control support for static RAM. When CONTROL is tied to GND, RESET will act as active high. The voltage monitor contains additional logic intended for control of static memories with battery backup during power failure. By driving the chip select ($\overline{CS}$) of the memory circuit with the RESET output of the TLC77xx and with the CONTROL driven by the memory bank select signal ($\overline{CSH1}$) of the microprocessor (see Figure 11), the memory circuit is automatically disabled during a power loss. (In this application the TLC77xx power has to be supplied by the battery.)

ORDERING INFORMATION

T_A	PACKAGE(1)		ORDERABLE PART NUMBER	TOP-SIDE MARKING	VID NUMBER
-40°C to 125°C	TSSOP - PW	Tape and reel	TLC7701QPWREP	7701QE	V62/04604 - 01XE
			TLC7705QPWREP	7705QE	V62/04604 - 02XE
			TLC7733QPWREP	7733QE	V62/04604 - 03XE
-55°C to 125°C	TSSOP - PW	Tape and reel	TLC7701MPWREP	7701ME	V62/04604 - 04XE
			TLC7733MPWREP	7733ME	V62/04604 - 06XE
	SOIC - D	Tape and reel	TLC7701MDREP	7701ME	V62/04604 - 04YE

(1) The PW package is only available left-end taped and reeled (indicated by the R suffix on the device type; e.g., TLC7701QPWREP).

Table 1. FUNCTION TABLE

CONTROL	RESIN	$V_{I(SENSE)} > V_{IT+}$	RESET	$\overline{RESET}$
L	L	False	H	L
L	L	True	H	L
L	H	False	H	L
L	H	True	L(1)	H(1)
H	L	False	H	L
H	L	True	H	L
H	H	False	H	L
H	H	True	H	H(1)

(1) RESET and $\overline{RESET}$ states shown are valid for $t > t_d$.

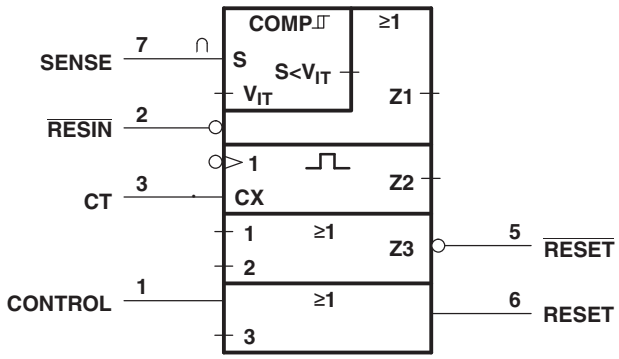

(1) This symbol is in accordance with ANSI/IEEE Std 91-1984 and IEC Publication 617-12.

Figure 1. Logic Symbol

Copyright © 2003–2011, Texas Instruments Incorporated

FUNCTIONAL BLOCK DIAGRAM

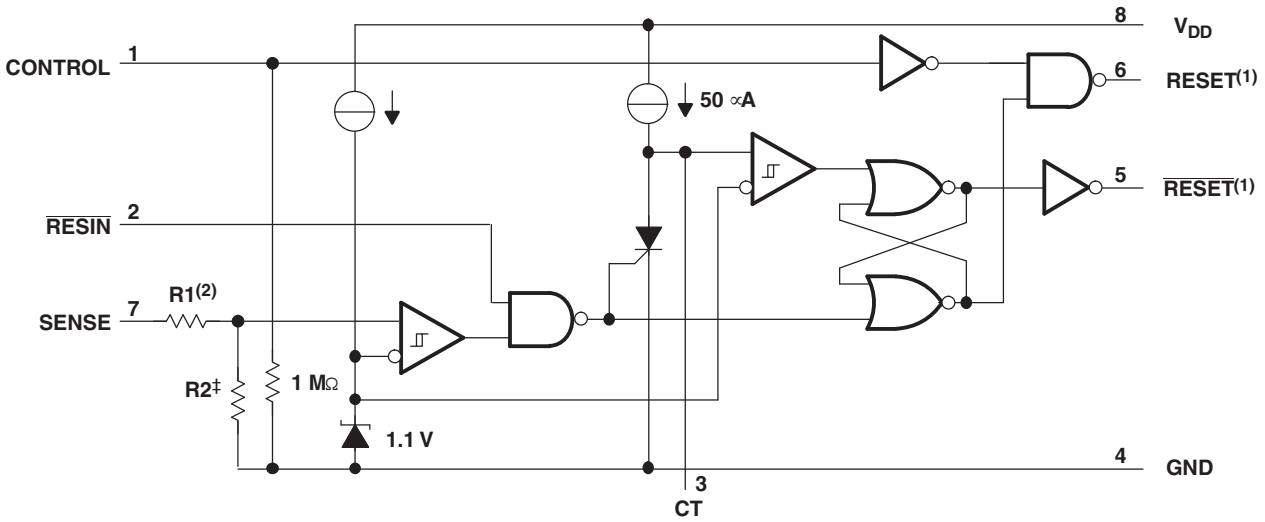

(1) Outputs are totem-pole configuration. External pullup or pulldown resistors are not required.

(2) Nominal values:

	R1 (Typ)	R2 (Typ)
TLC7701	0	∞
TLC7705	910 kΩ	290 kΩ
TLC7733	750 kΩ	450 kΩ

TIMING DIAGRAM

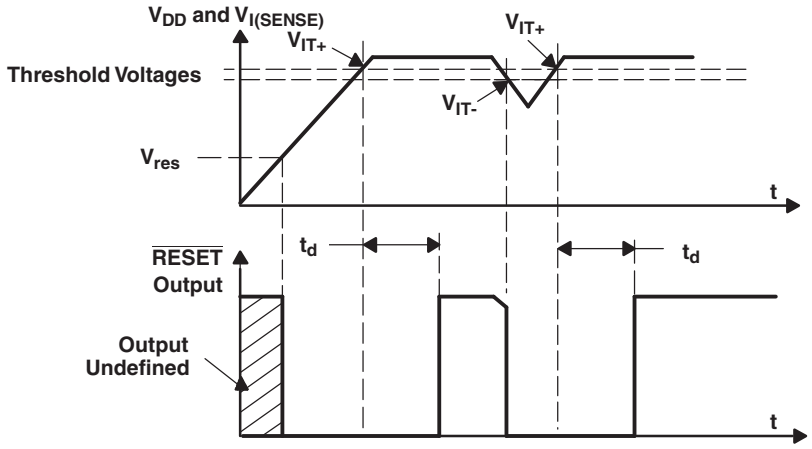

ABSOLUTE MAXIMUM RATINGS

over operating free-air temperature range (unless otherwise noted)(1)

			VALUE	UNIT
V_{DD}	Supply voltage(2)		7	V
	Input voltage range, CONTROL, RESIN, SENSE (2)		-0.3 to 7	V
I_{OL}	Maximum low output current		10	mA
I_{OH}	Maximum high output current		10	mA
I_{IK}	Input clamp current, (V_I < 0 or V_I > V_{DD})		±10	mA
I_{OK}	Output clamp current, (V_O < 0 or V_O > V_{DD})		±10	mA
T_A	Operating free-air temperature range	TL77xxQ	-40 to 125	°C
		TL77xxM	-55 to 125	
T_{stg}	Storage temperature range		-65 to 150	°C

(1) Stresses beyond those listed under "absolute maximum ratings" may cause permanent damage to the device. These are stress ratings only, and functional operation of the device at these or any other conditions beyond those indicated under "recommended operating conditions" is not implied. Exposure to absolute-maximum-rated conditions for extended periods may affect device reliability.
(2) All voltage values are with respect to GND.

THERMAL INFORMATION

THERMAL METRIC(1)		TLC77xx-EP D 8 PINS	TLC77xx-EP PW 8 PINS	UNITS
θ_{JA}	Junction-to-ambient thermal resistance	97.1	168	°C/W
θ_{JC}	Junction-to-case thermal resistance	39.4	38.9	
θ_{JB}	Junction-to-board thermal resistance	-	96.6	
ψ_{JT}	Junction-to-top characterization parameter	-	1.5	
ψ_{JB}	Junction-to-board characterization parameter	-	94.7	

(1) For more information about traditional and new thermal metrics, see the IC Package Thermal Metrics application report, SPRA953.

RECOMMENDED OPERATING CONDITIONS(1)

over operating free-air temperature range (unless otherwise noted)

			MIN	NOM	MAX	UNIT
V_{DD}	Supply voltage		2		6	V
V_I	Input voltage		0		V_{DD}	V
V_{IH}	High-level input voltage at $\overline{\text{RESIN}}$ and CONTROL(2)		0.7×V_{DD}			V
V_{IL}	Low-level input voltage at $\overline{\text{RESIN}}$ and CONTROL				0.2×V_{DD}	V
I_{OH}	High-level output current, V_{DD} ≥ 2.7 V				-2	mA
I_{OL}	Low-level output current, V_{DD} ≥ 2.7 V				2	mA
Δt/ΔV	Input transition rise and fall rate at $\overline{\text{RESIN}}$ and CONTROL				100	ns/V
T_A	Operating free-air temperature range	Q temperature range	-40		125	°C
		M temperature range	-55		125	

(1) Long-term high-temperature storage and/or extended use at maximum recommended operating conditions may result in a reduction of overall device life. See http://www.ti.com/ep_quality for additional information on enhanced plastic packaging.
(2) To ensure a low supply current, V_{IL} should be kept <0.3 V and V_{IH} > -0.3 V.

Copyright © 2003–2011, Texas Instruments Incorporated

ELECTRICAL CHARACTERISTICS

over recommended operating conditions(1) (unless otherwise noted)

PARAMETER			TEST CONDITIONS	T_A = -40°C to 125°C			T_A = -55°C to 125°C			UNIT
				MIN	TYP(2)	MAX	MIN	TYP(2)	MAX	
V_{OH}	High-level output voltage	I_{OH} = - 20 µA	V_{DD} = 2 V	1.8			1.8			V
			V_{DD} = 2.7 V	2.5			2.5			
			V_{DD} = 4.5 V	4.3			4.3			
		I_{OH} = - 20 mA	V_{DD} = 4.5 V	3.7			3.7			
V_{OL}	Low-level output voltage	I_{OH} = - 20 µA	V_{DD} = 2 V			0.2			0.2	V
			V_{DD} = 2.7 V			0.2			0.2	
			V_{DD} = 4.5 V			0.2			0.2	
		I_{OH} = - 20 mA	V_{DD} = 4.5 V			0.5			0.5	
V_{IT-}	Negative-going input threshold voltage, SENSE(3)	TLC7701	V_{DD} = 2 V to 6 V	1.04	1.1	1.16				V
		TLC7705		4.43	4.5	4.63				
		TLC7733		2.855	2.93	3.03	2.8	2.93	3.03	
V_{hys}	Hysteresis voltage, SENSE	TLC7701	V_{DD} = 2 V to 6 V		30					mV
		TLC7705			70					
		TLC7733			70			70		
V_{res}	Power-up reset voltage(4)		I_{OL} = 20 µA			1			1	V
I_I	Input current	$\overline{RESIN}$	V_I = 0 V to V_{DD}			2			2	µA
		CONTROL	V_I = V_{DD}		7	15		7	15	
		SENSE	V_I = 5 V		5	10		5	10	
		SENSE, TLC7701 only	V_I = 5 V			2				
I_{DD}	Supply current		$\overline{RESIN}$ = V_{DD}, SENSE = V_{DD} ≥ V_{ITmax} + 0.2 V CONTROL = 0 V, Outputs open		9	16		9	18	µA
$I_{DD(d)}$	Supply current during t_d		V_{DD} = 5 V, V_{CT} = 0 , $\overline{RESIN}$ = V_{DD}, SENSE = V_{DD} CONTROL = 0 V, Outputs open		120	150		120	150	µA
C_I	Input capacitance, SENSE		V_I = 0 V to V_{DD}		50			50		pF

(1) All characteristics are measured with C_T = 0.1 µF.
(2) Typical values apply at T_A = 25°C.
(3) To ensure best stability of the threshold voltage, a bypass capacitor (ceramic, 0.1 µF) should be connected near the supply terminals.
(4) The lowest supply voltage at which $\overline{RESET}$ becomes active. The symbol V_{res} is not currently listed within EIA or JEDEC standards for semiconductor symbology. Rise time of VDD ≥ 15 ms/V.

Copyright © 2003–2011, Texas Instruments Incorporated

SWITCHING CHARACTERISTICS

over operating free-air temperature range (unless otherwise noted)

PARAMETER		MEASURED		TEST CONDITIONS	T_A = -40°C to 125°C			T_A = -55°C to 125°C			UNIT
		FROM (INPUT)	TO (OUTPUT)		MIN	TYP	MAX	MIN	TYP	MAX	
t_d	Delay time			$\overline{RESIN}$ = 0.7 × V_{DD}, CONTROL = 0.2 × $V_{DD,CT}$ = 100 nF, T_A = Full range, See timing diagram	1.1	2.1	4.2		2.1		ms
t_{PLH}	Propagation delay time, low-to-high level output	SENSE	$\overline{RESET}$	V_{IH} = V_{IT+max} + 0.2 V, V_{IL} = V_{IT-min} - 0.2 V, $\overline{RESIN}$ = 0.7 × $V_{DD,CONTROL}$ = 0.2 × V_{DD}, C_T = NC(1)			20			20	µs
t_{PLH}	Propagation delay time, high-to-low level output						5			5	
t_{PLH}	Propagation delay time, low-to-high level output		RESET				5			5	
t_{PLH}	Propagation delay time, high-to-low level output						20			20	
t_{PLH}	Propagation delay time, low-to-high level output	$\overline{RESIN}$	$\overline{RESET}$	V_{IH} = 0.7 × V_{DD}, V_{IL} = 0.2 × $V_{DD,SENSE}$ = V_{IT+max} + 0.2 V, CONTROL = 0.2 × V_{DD}, C_T = NC(1)			20			20	µs
t_{PLH}	Propagation delay time, high-to-low level output						60			60	ns
t_{PLH}	Propagation delay time, low-to-high level output		RESET				65			65	
t_{PLH}	Propagation delay time, high-to-low level output						20			20	µs
t_{PLH}	Propagation delay time, low-to-high level output	CONTROL	RESET	V_{IH} = 0.7 × V_{DD}, V_{IL} = 0.2 × $V_{DD,SENSE}$ = V_{IT+max} + 0.2 V, $\overline{RESIN}$ = 0.7 × V_{DD}, C_T = NC(1)			58			58	ns
t_{PLH}	Propagation delay time, high-to-low level output						58			58	ns
	Low-level minimum pulse duration to switch RESET and $\overline{RESET}$	SENSE		V_{IH} = V_{IT+max} + 0.2 V, V_{IL} = V_{IT-min} - 0.2 V	3			4			µs
		$\overline{RESIN}$		V_{IL} = 0.2 × V_{DD}, V_{IH} = 0.7 × V_{DD}	1			1			
t_r	Rise time		RESET and $\overline{RESET}$	10% to 90%		8			8		ns/V
t_f	Fall time			90% to 10%		4			4		

(1) NC = No capacitor, and includes up to 100-pF probe and jig capacitance.

Copyright © 2003–2011, Texas Instruments Incorporated

PARAMETER MEASUREMENT INFORMATION

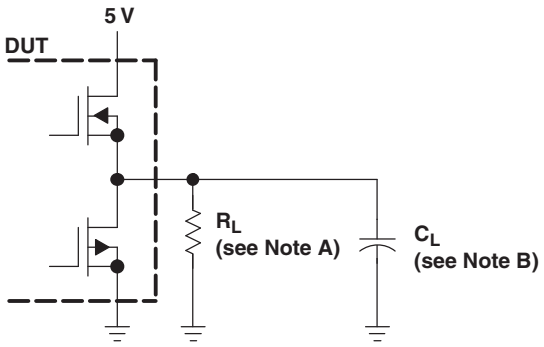

A. For switching characteristics, R_L = 2 kΩ

B. C_L = 50 pF includes jig and probe capacitance

Figure 2. RESET AND $\overline{\text{RESET}}$ Output Configurations

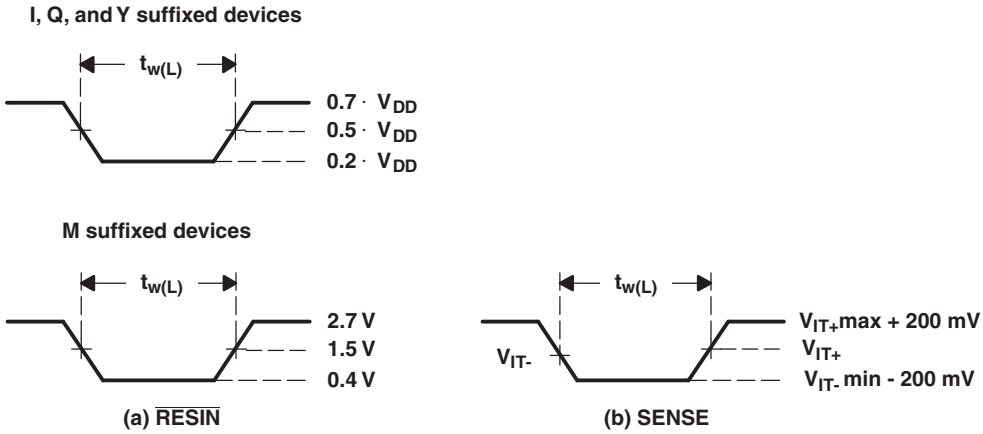

Figure 3. Input Pulse Definition Waveforms

Copyright © 2003–2011, Texas Instruments Incorporated

TYPICAL CHARACTERISTICS

NORMALIZED INPUT THRESHOLD VOLTAGE vs TEMPERATURE

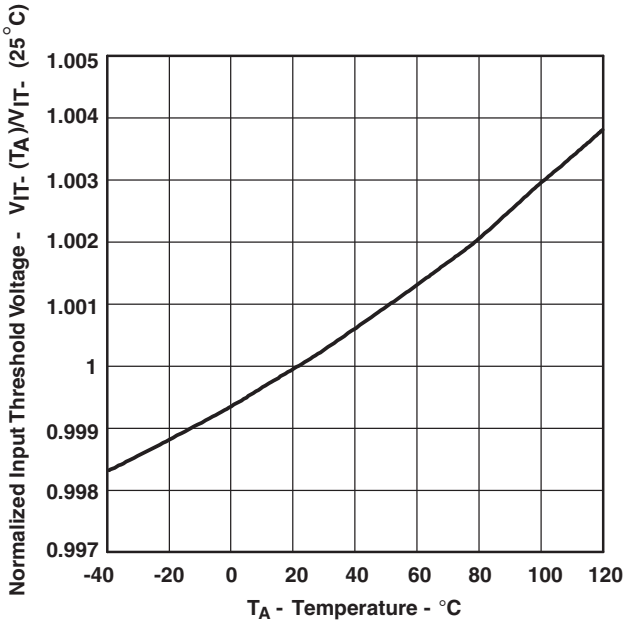

Figure 4.

SUPPLY CURRENT vs SUPPLY VOLTAGE

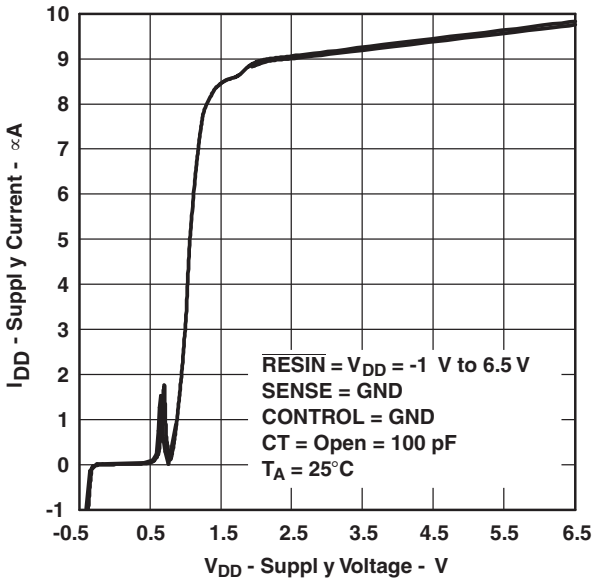

Figure 5.

HIGH-LEVEL OUTPUT VOLTAGE vs HIGH-LEVEL OUTPUT CURRENT

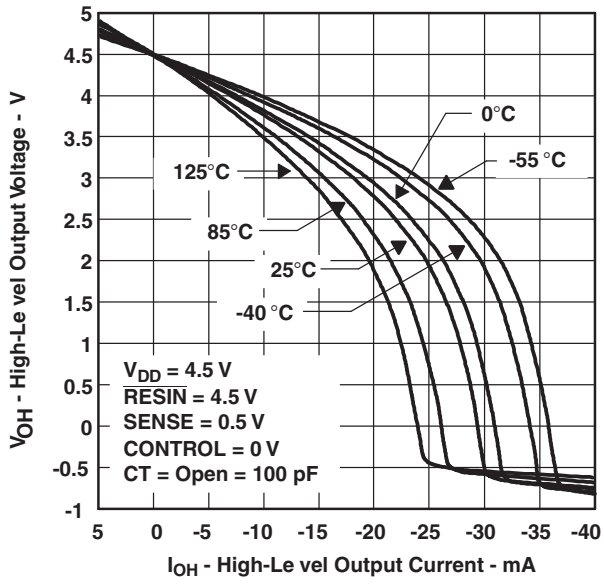

Figure 6.

LOW-LEVEL OUTPUT VOLTAGE vs LOW-LEVEL OUTPUT CURRENT

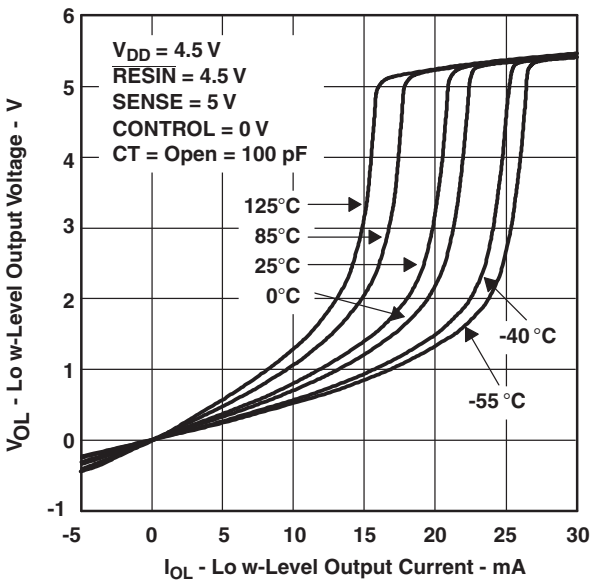

Figure 7.

Copyright © 2003–2011, Texas Instruments Incorporated

TYPICAL CHARACTERISTICS (continued)

INPUT CURRENT vs INPUT VOLTAGE AT SENSE

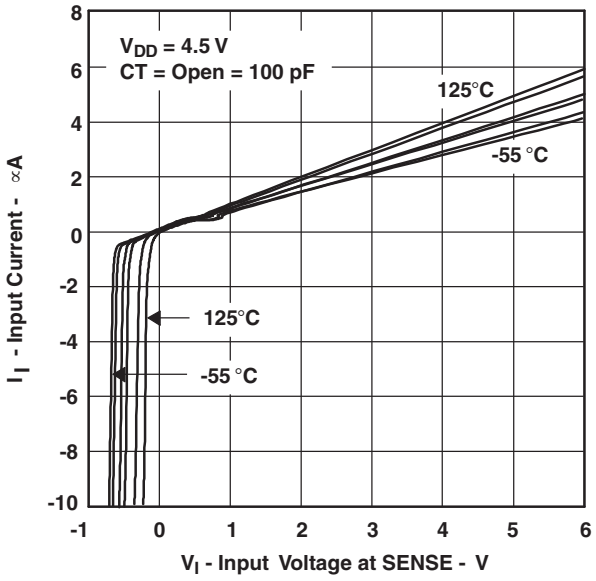

Figure 8.

MINIMUM PULSE DURATION AT SENSE vs SENSE THRESHOLD OVERDRIVE

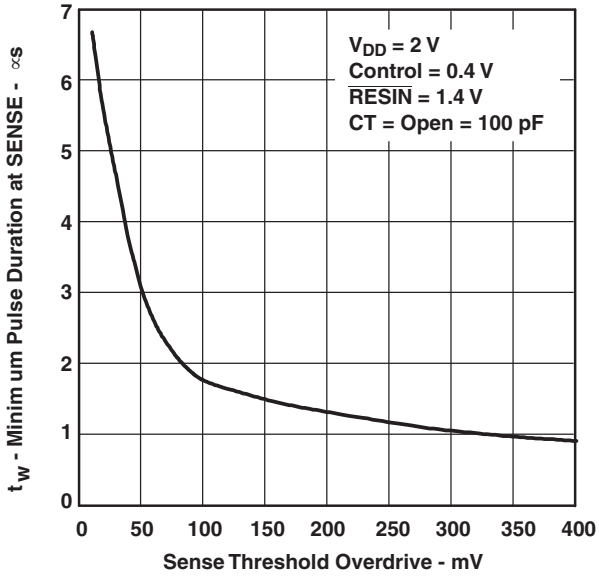

Figure 9.

APPLICATION INFORMATION

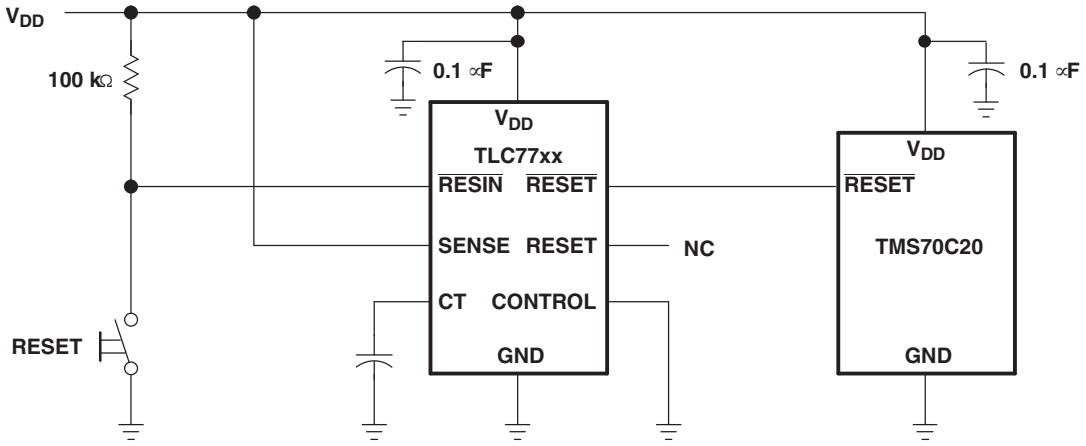

Figure 10. Reset Controller in a Microcomputer System

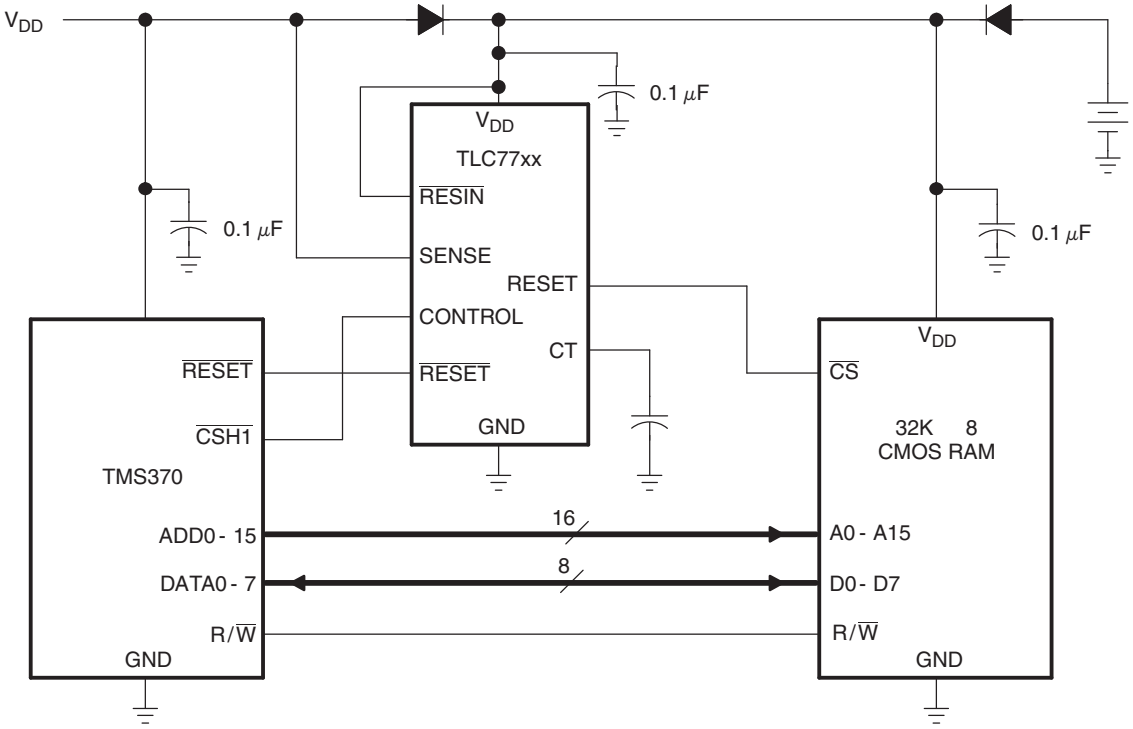

Figure 11. Data Retention During Power Down Using Static CMOS RAMs

Copyright © 2003–2011, Texas Instruments Incorporated

PACKAGING INFORMATION

Orderable Device	Status (1)	Package Type	Package Drawing	Pins	Package Qty	Eco Plan (2)	Lead finish/ Ball material (6)	MSL Peak Temp (3)	Op Temp (°C)	Device Marking (4/5)	Samples
TLC7701MDREP	ACTIVE	SOIC	D	8	2500	RoHS & Green	NIPDAU	Level-1-260C-UNLIM	-55 to 125	7701ME	Samples
TLC7701MPWREP	ACTIVE	TSSOP	PW	8	2000	RoHS & Green	NIPDAU	Level-1-260C-UNLIM	-55 to 125	7701ME	Samples
TLC7701MPWREPG4	ACTIVE	TSSOP	PW	8	2000	RoHS & Green	NIPDAU	Level-1-260C-UNLIM	-55 to 125	7701ME	Samples
TLC7701QPWREP	ACTIVE	TSSOP	PW	8	2000	RoHS & Green	NIPDAU	Level-1-260C-UNLIM	-40 to 125	7701QE	Samples
TLC7705QPWREP	ACTIVE	TSSOP	PW	8	2000	RoHS & Green	NIPDAU	Level-1-260C-UNLIM	-40 to 125	7705QE	Samples
TLC7733MPWREP	ACTIVE	TSSOP	PW	8	2000	RoHS & Green	NIPDAU	Level-1-260C-UNLIM	-55 to 125	7733ME	Samples
TLC7733QPWREP	ACTIVE	TSSOP	PW	8	2000	RoHS & Green	NIPDAU	Level-1-260C-UNLIM	-40 to 125	7733QE	Samples
V62/04604-01XE	ACTIVE	TSSOP	PW	8	2000	RoHS & Green	NIPDAU	Level-1-260C-UNLIM	-40 to 125	7701QE	Samples
V62/04604-02XE	ACTIVE	TSSOP	PW	8	2000	RoHS & Green	NIPDAU	Level-1-260C-UNLIM	-40 to 125	7705QE	Samples
V62/04604-03XE	ACTIVE	TSSOP	PW	8	2000	RoHS & Green	NIPDAU	Level-1-260C-UNLIM	-40 to 125	7733QE	Samples
V62/04604-04XE	ACTIVE	TSSOP	PW	8	2000	RoHS & Green	NIPDAU	Level-1-260C-UNLIM	-55 to 125	7701ME	Samples
V62/04604-04YE	ACTIVE	SOIC	D	8	2500	RoHS & Green	NIPDAU	Level-1-260C-UNLIM	-55 to 125	7701ME	Samples
V62/04604-06XE	ACTIVE	TSSOP	PW	8	2000	RoHS & Green	NIPDAU	Level-1-260C-UNLIM	-55 to 125	7733ME	Samples

(1) The marketing status values are defined as follows:
ACTIVE: Product device recommended for new designs.
LIFEBUY: TI has announced that the device will be discontinued, and a lifetime-buy period is in effect.
NRND: Not recommended for new designs. Device is in production to support existing customers, but TI does not recommend using this part in a new design.
PREVIEW: Device has been announced but is not in production. Samples may or may not be available.
OBSOLETE: TI has discontinued the production of the device.

(2) **RoHS:** TI defines "RoHS" to mean semiconductor products that are compliant with the current EU RoHS requirements for all 10 RoHS substances, including the requirement that RoHS substance do not exceed 0.1% by weight in homogeneous materials. Where designed to be soldered at high temperatures, "RoHS" products are suitable for use in specified lead-free processes. TI may reference these types of products as "Pb-Free".
RoHS Exempt: TI defines "RoHS Exempt" to mean products that contain lead but are compliant with EU RoHS pursuant to a specific EU RoHS exemption.
Green: TI defines "Green" to mean the content of Chlorine (Cl) and Bromine (Br) based flame retardants meet JS709B low halogen requirements of <=1000ppm threshold. Antimony trioxide based flame retardants must also meet the <=1000ppm threshold requirement.

(3) MSL, Peak Temp. - The Moisture Sensitivity Level rating according to the JEDEC industry standard classifications, and peak solder temperature.

(4) There may be additional marking, which relates to the logo, the lot trace code information, or the environmental category on the device.

(5) Multiple Device Markings will be inside parentheses. Only one Device Marking contained in parentheses and separated by a "~" will appear on a device. If a line is indented then it is a continuation of the previous line and the two combined represent the entire Device Marking for that device.

(6) Lead finish/Ball material - Orderable Devices may have multiple material finish options. Finish options are separated by a vertical ruled line. Lead finish/Ball material values may wrap to two lines if the finish value exceeds the maximum column width.

Important Information and Disclaimer: The information provided on this page represents TI's knowledge and belief as of the date that it is provided. TI bases its knowledge and belief on information provided by third parties, and makes no representation or warranty as to the accuracy of such information. Efforts are underway to better integrate information from third parties. TI has taken and continues to take reasonable steps to provide representative and accurate information but may not have conducted destructive testing or chemical analysis on incoming materials and chemicals. TI and TI suppliers consider certain information to be proprietary, and thus CAS numbers and other limited information may not be available for release.

In no event shall TI's liability arising out of such information exceed the total purchase price of the TI part(s) at issue in this document sold by TI to Customer on an annual basis.

OTHER QUALIFIED VERSIONS OF TLC77-EP :

- Catalog: TLC77
- Automotive: TLC77-Q1

NOTE: Qualified Version Definitions:

- Catalog - TI's standard catalog product
- Automotive - Q100 devices qualified for high-reliability automotive applications targeting zero defects

TAPE AND REEL INFORMATION

REEL DIMENSIONS

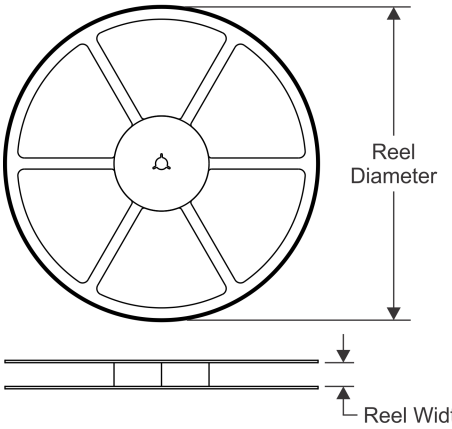

TAPE DIMENSIONS

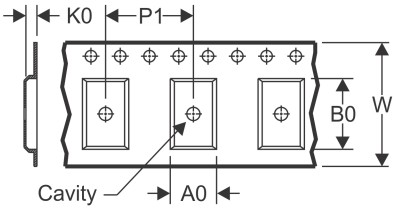

A0	Dimension designed to accommodate the component width
B0	Dimension designed to accommodate the component length
K0	Dimension designed to accommodate the component thickness
W	Overall width of the carrier tape
P1	Pitch between successive cavity centers

QUADRANT ASSIGNMENTS FOR PIN 1 ORIENTATION IN TAPE

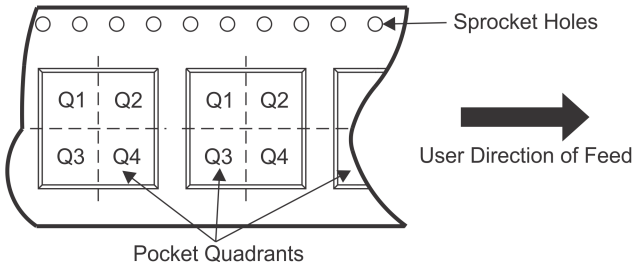

*All dimensions are nominal

Device	Package Type	Package Drawing	Pins	SPQ	Reel Diameter (mm)	Reel Width W1 (mm)	A0 (mm)	B0 (mm)	K0 (mm)	P1 (mm)	W (mm)	Pin1 Quadrant
TLC7701MDREP	SOIC	D	8	2500	330.0	12.4	6.4	5.2	2.1	8.0	12.0	Q1
TLC7701MPWREP	TSSOP	PW	8	2000	330.0	12.4	7.0	3.6	1.6	8.0	12.0	Q1
TLC7701QPWREP	TSSOP	PW	8	2000	330.0	12.4	7.0	3.6	1.6	8.0	12.0	Q1
TLC7705QPWREP	TSSOP	PW	8	2000	330.0	12.4	7.0	3.6	1.6	8.0	12.0	Q1
TLC7733MPWREP	TSSOP	PW	8	2000	330.0	12.4	7.0	3.6	1.6	8.0	12.0	Q1
TLC7733QPWREP	TSSOP	PW	8	2000	330.0	12.4	7.0	3.6	1.6	8.0	12.0	Q1

TAPE AND REEL BOX DIMENSIONS

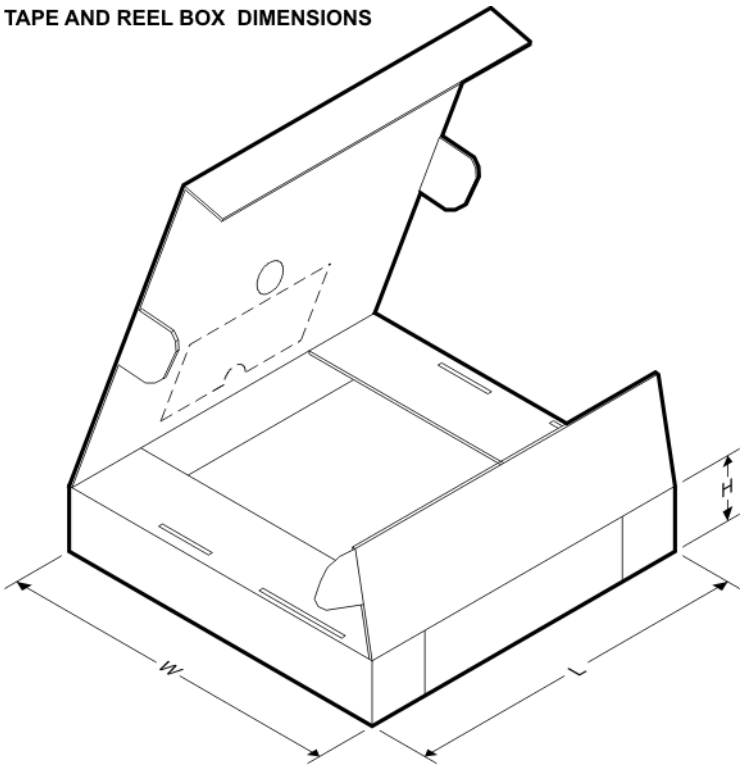

*All dimensions are nominal

Device	Package Type	Package Drawing	Pins	SPQ	Length (mm)	Width (mm)	Height (mm)
TLC7701MDREP	SOIC	D	8	2500	340.5	336.1	25.0
TLC7701MPWREP	TSSOP	PW	8	2000	853.0	449.0	35.0
TLC7701QPWREP	TSSOP	PW	8	2000	853.0	449.0	35.0
TLC7705QPWREP	TSSOP	PW	8	2000	853.0	449.0	35.0
TLC7733MPWREP	TSSOP	PW	8	2000	853.0	449.0	35.0
TLC7733QPWREP	TSSOP	PW	8	2000	853.0	449.0	35.0

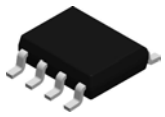

PACKAGE OUTLINE

D0008A

SOIC - 1.75 mm max height

SMALL OUTLINE INTEGRATED CIRCUIT

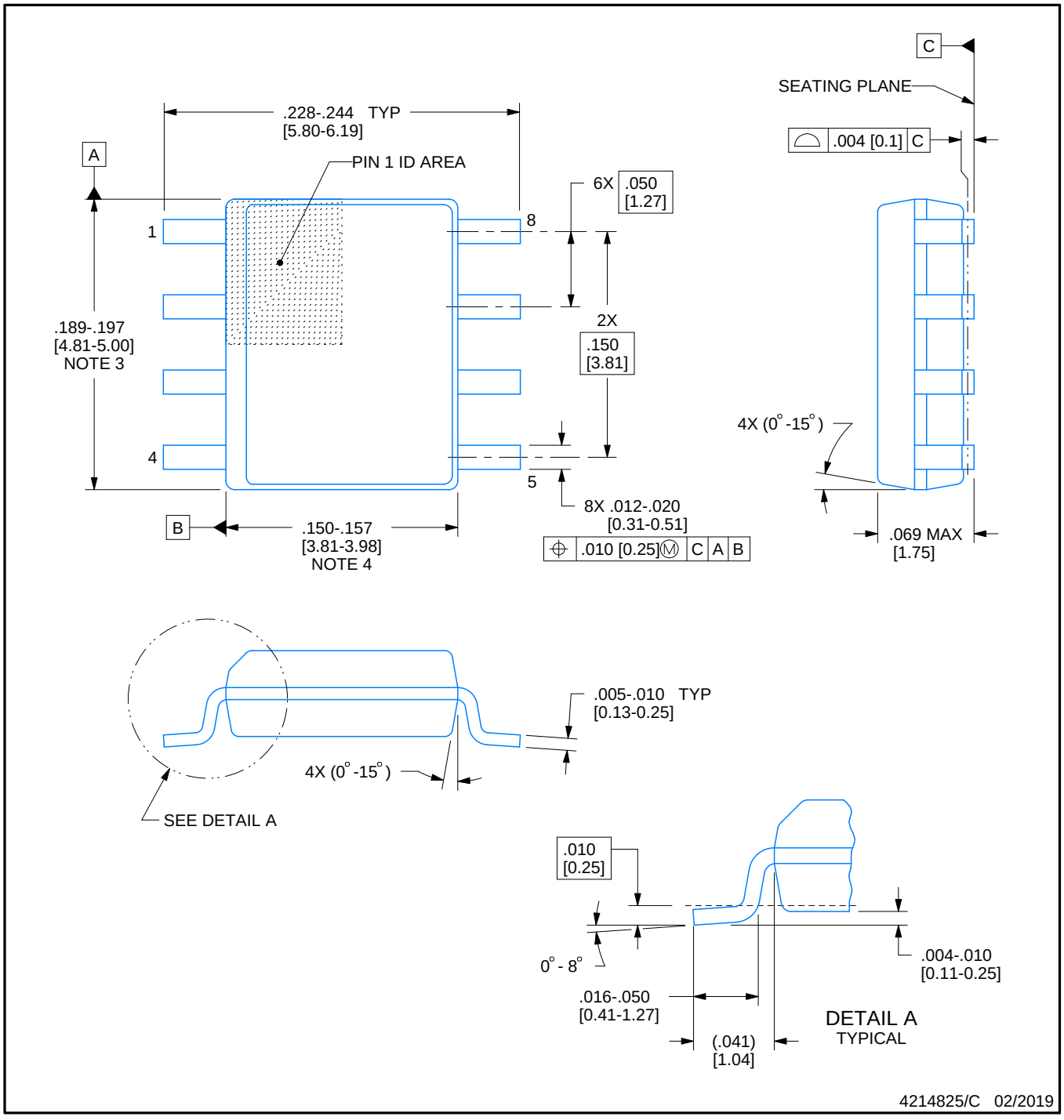

NOTES:

1. Linear dimensions are in inches [millimeters]. Dimensions in parenthesis are for reference only. Controlling dimensions are in inches. Dimensioning and tolerancing per ASME Y14.5M.
2. This drawing is subject to change without notice.
3. This dimension does not include mold flash, protrusions, or gate burrs. Mold flash, protrusions, or gate burrs shall not exceed .006 [0.15] per side.
4. This dimension does not include interlead flash.
5. Reference JEDEC registration MS-012, variation AA.

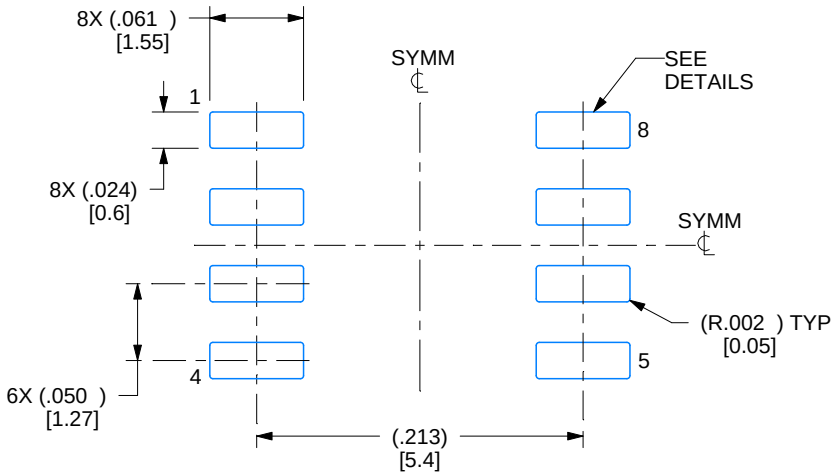

LAND PATTERN EXAMPLE
EXPOSED METAL SHOWN
SCALE:8X

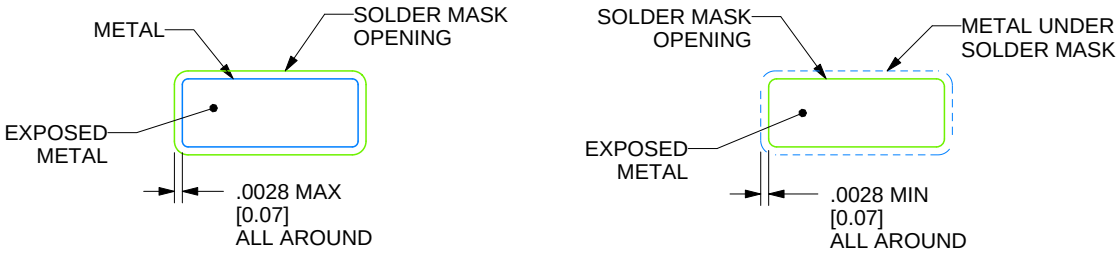

SOLDER MASK DETAILS

4214825/C 02/2019

NOTES: (continued)

6. Publication IPC-7351 may have alternate designs.
7. Solder mask tolerances between and around signal pads can vary based on board fabrication site.

EXAMPLE STENCIL DESIGN

D0008A

SOIC - 1.75 mm max height

SMALL OUTLINE INTEGRATED CIRCUIT

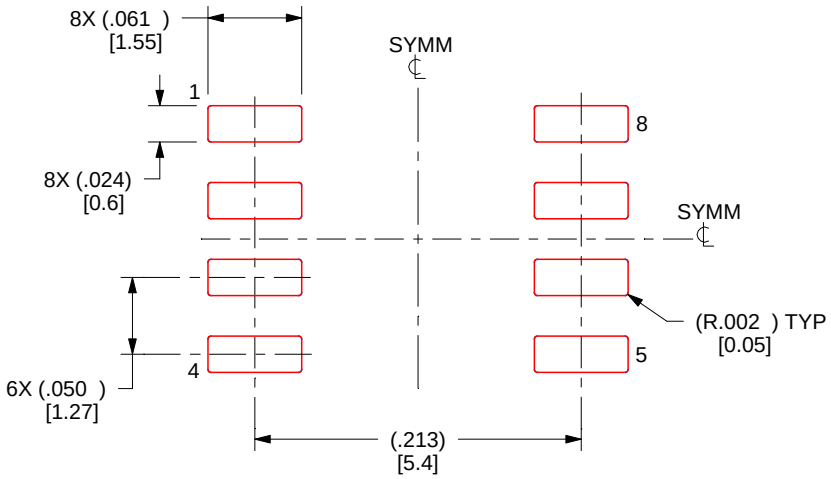

SOLDER PASTE EXAMPLE
BASED ON .005 INCH [0.125 MM] THICK STENCIL
SCALE:8X

4214825/C 02/2019

NOTES: (continued)

8. Laser cutting apertures with trapezoidal walls and rounded corners may offer better paste release. IPC-7525 may have alternate design recommendations.
9. Board assembly site may have different recommendations for stencil design.

PACKAGE OUTLINE

PW0008A

TSSOP - 1.2 mm max height

SMALL OUTLINE PACKAGE

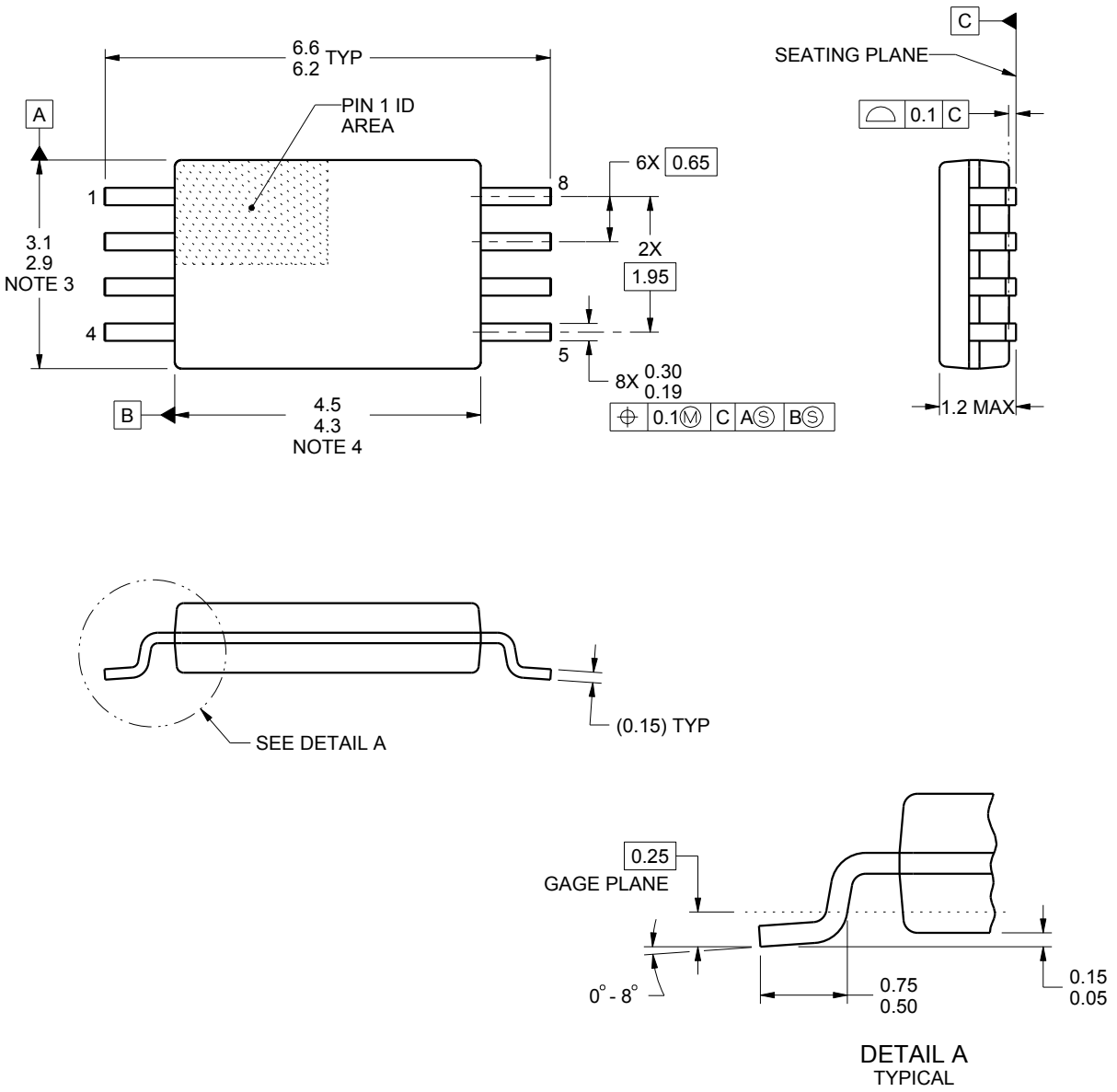

NOTES:

1. All linear dimensions are in millimeters. Any dimensions in parenthesis are for reference only. Dimensioning and tolerancing per ASME Y14.5M.
2. This drawing is subject to change without notice.
3. This dimension does not include mold flash, protrusions, or gate burrs. Mold flash, protrusions, or gate burrs shall not exceed 0.15 mm per side.
4. This dimension does not include interlead flash. Interlead flash shall not exceed 0.25 mm per side.
5. Reference JEDEC registration MO-153, variation AA.

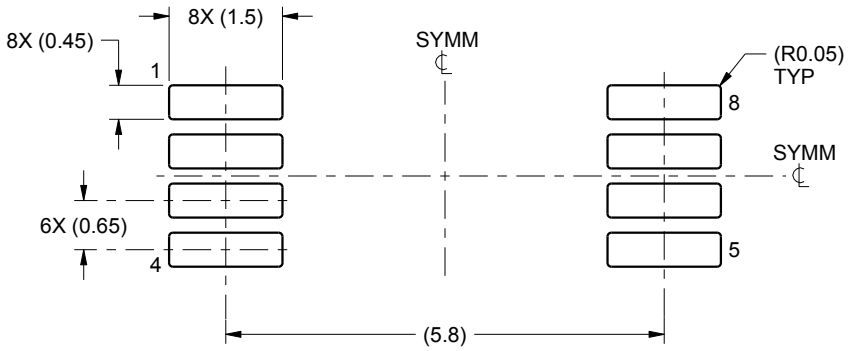

LAND PATTERN EXAMPLE
SCALE:10X

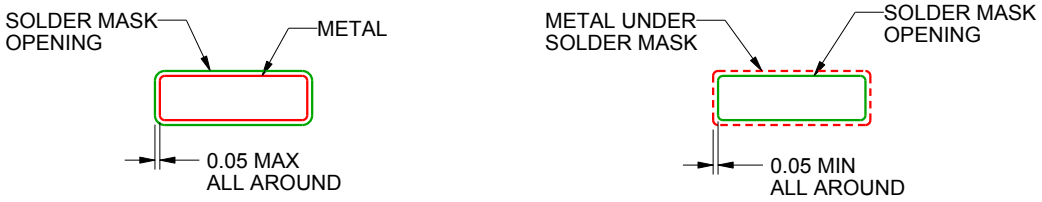

SOLDER MASK DETAILS
NOT TO SCALE

4221848/A 02/2015

NOTES: (continued)

6. Publication IPC-7351 may have alternate designs.
7. Solder mask tolerances between and around signal pads can vary based on board fabrication site.

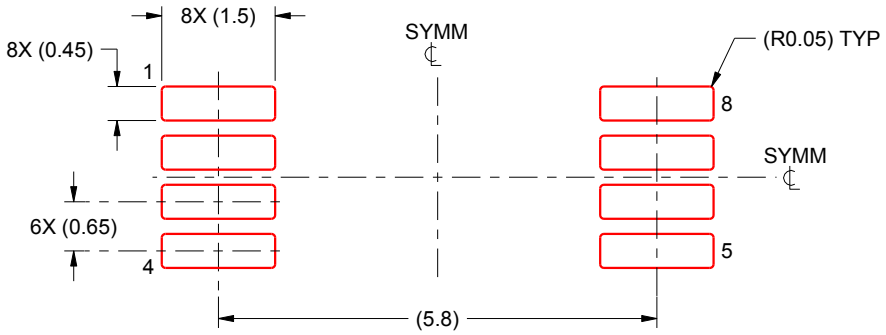

SOLDER PASTE EXAMPLE
BASED ON 0.125 mm THICK STENCIL
SCALE:10X

4221848/A 02/2015

NOTES: (continued)

8. Laser cutting apertures with trapezoidal walls and rounded corners may offer better paste release. IPC-7525 may have alternate design recommendations.
9. Board assembly site may have different recommendations for stencil design.

IMPORTANT NOTICE AND DISCLAIMER

TI PROVIDES TECHNICAL AND RELIABILITY DATA (INCLUDING DATASHEETS), DESIGN RESOURCES (INCLUDING REFERENCE DESIGNS), APPLICATION OR OTHER DESIGN ADVICE, WEB TOOLS, SAFETY INFORMATION, AND OTHER RESOURCES “AS IS” AND WITH ALL FAULTS, AND DISCLAIMS ALL WARRANTIES, EXPRESS AND IMPLIED, INCLUDING WITHOUT LIMITATION ANY IMPLIED WARRANTIES OF MERCHANTABILITY, FITNESS FOR A PARTICULAR PURPOSE OR NON-INFRINGEMENT OF THIRD PARTY INTELLECTUAL PROPERTY RIGHTS.

These resources are intended for skilled developers designing with TI products. You are solely responsible for (1) selecting the appropriate TI products for your application, (2) designing, validating and testing your application, and (3) ensuring your application meets applicable standards, and any other safety, security, or other requirements. These resources are subject to change without notice. TI grants you permission to use these resources only for development of an application that uses the TI products described in the resource. Other reproduction and display of these resources is prohibited. No license is granted to any other TI intellectual property right or to any third party intellectual property right. TI disclaims responsibility for, and you will fully indemnify TI and its representatives against, any claims, damages, costs, losses, and liabilities arising out of your use of these resources.

TI’s products are provided subject to TI’s Terms of Sale (https:www.ti.com/legal/termsofsale.html) or other applicable terms available either on ti.com or provided in conjunction with such TI products. TI’s provision of these resources does not expand or otherwise alter TI’s applicable warranties or warranty disclaimers for TI products.

Mailing Address: Texas Instruments, Post Office Box 655303, Dallas, Texas 75265
Copyright © 2021, Texas Instruments Incorporated