CD74HC595 8-Bit Shift Registers With 3-State Output Registers

1 Features

- 8-Bit serial-in, parallel-out shift
- Wide operating voltage range of 2 V to 6 V
- High-current 3-state outputs can drive up to 15 LSTTL loads
- Low power consumption, 80-μA max I_{CC}
- Typical t_{PD} = 14 ns
- ±6-mA output drive at 5 V
- Low input current of 1 μA max
- Shift register has direct clear

2 Description

The CD74HC595 is an 8-bit serial-input parallel-output shift register with output registers and 3-state outputs.

Device Information

PART NUMBER	PACKAGE[1]	BODY SIZE (NOM)
CD74HC595E	PDIP (16)	19.31 mm × 6.35 mm
CD74HC595DW	SOIC-DW (16)	10.30 mm × 7.50 mm
CD74HC595M	SOIC-D (16)	9.90 mm × 3.90 mm
CD74HC595NS	SO (16)	10.20 mm × 5.30 mm
CD74HC595SM	SSOP (16)	6.20 mm × 5.30 mm

(1) For all available packages, see the orderable addendum at the end of the data sheet.

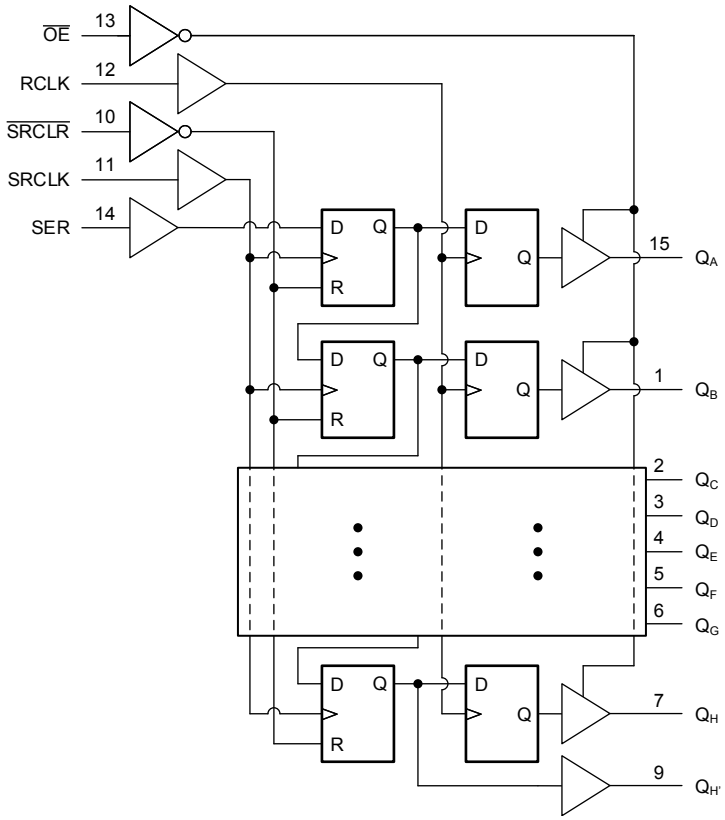

Functional Block Diagram

An IMPORTANT NOTICE at the end of this data sheet addresses availability, warranty, changes, use in safety-critical applications, intellectual property matters and other important disclaimers. PRODUCTION DATA.

Table of Contents

1 Features....1
2 Description....1
3 Revision History....2
4 Pin Configuration and Functions....3
5 Specifications....4
5.1 Absolute Maximum Ratings....4
5.2 Recommended Operating Conditions[1]....4
5.3 Thermal Information....4
5.4 Electrical Characteristics....5
5.5 Timing Requirements....6
5.6 Switching Characteristics....8
5.7 Operating Characteristics....9
6 Parameter Measurement Information....10
7 Detailed Description....11
7.1 Overview....11
7.2 Functional Block Diagram....11
7.3 Device Functional Modes....12
8 Power Supply Recommendations....13
9 Layout....13
9.1 Layout Guidelines....13
10 Device and Documentation Support....14
10.1 Documentation Support....14
10.2 Receiving Notification of Documentation Updates....14
10.3 Support Resources....14
10.4 Trademarks....14
10.5 Electrostatic Discharge Caution....14
10.6 Glossary....14
11 Mechanical, Packaging, and Orderable Information....14

3 Revision History

NOTE: Page numbers for previous revisions may differ from page numbers in the current version.

Changes from Revision * (January 2004) to Revision A (February 2022)	Page
• Updated the numbering, formatting, tables, figures, and cross-references throughout the document to reflect modern data sheet standards	1

Copyright © 2022 Texas Instruments Incorporated

4 Pin Configuration and Functions

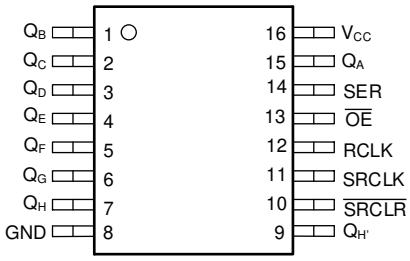

D, DW, N, NS, or DB Package
16-Pin SOIC, PDIP, SO, or SSOP
Top View

5 Specifications

5.1 Absolute Maximum Ratings

over operating free-air temperature range (unless otherwise noted)[1]

			MIN	MAX	UNIT
V_{CC}	Supply voltage		-0.5	7	V
I_{IK}	Input clamp current[2]	For $V_I < 0$ or $V_I > V_{CC}$		±20	mA
I_{OK}	Output clamp current[2]	For $V_O < 0$ or $V_O > V_{CC}$		±20	mA
I_O	Continous output current	For -0.5V < V_O = 0 to V_{CC}		±35	mA
	Continuous current through V_{CC} or GND			±70	mA
T_{stg}	Storage temperature		-65	150	°C

(1) Stresses beyond those listed under *absolute maximum ratings* may cause permanent damage to the device. These are stress ratings only and functional operation of the device at these or any other conditions beyond those indicated under *recommended operating conditions* is not implied. Exposure to absolute-maximum-rated conditions for extended periods may affect device reliability.
(2) The input and output voltage ratings may be exceeded if the input and output current ratings are observed.

5.2 Recommended Operating Conditions[1]

			MIN	NOM	MAX	UNIT
V_{CC}	Supply voltage		2	5	6	V
V_{IH}	High-level input voltage	V_{CC} = 2V	1.5			V
		V_{CC} = 4.5V	3.15			
		V_{CC} = 6V	4.2			
V_{IL}	Low-level input voltage	V_{CC} = 2V			0.5	V
		V_{CC} = 4.5V			1.35	
		V_{CC} = 6V			1.8	
V_I	Input voltage		0		V_{CC}	V
V_O	Output voltage		0		V_{CC}	V
t_t [2]	Input transition rise and fall time	V_{CC} = 2V			1000	ns
		V_{CC} = 4.5V			500	
		V_{CC} = 6V			400	
T_A	Operating free-air temperature		-55		125	°C

(1) All unused inputs of the device must be held at V_{CC} or GND to ensure proper device operation. Refer to the TI application report, *Implications of Slow or Floating CMOS Inputs*, literature number SCBA004.
(2) If this device is used in the threshold region (from V_{IL}max = 0.5 V to V_{IH}min = 1.5 V), there is a potential to go into the wrong state from induced grounding, causing double clocking. Operating with the inputs at t_t = 1000 ns and V_{CC} = 2 V does not damage the device; however, functionally, the CLK inputs are not ensured while in the shift, count, or toggle operating modes.

5.3 Thermal Information

THERMAL METRIC		N (PDIP) 16 PINS	DW (SOIC) 16 PINS	D (SOIC) 16 PINS	NS (SO) 16 PINS	DB (SSOP) 16 PINS	UNIT
$R_{\theta JA}$	Junction-to-ambient thermal resistance[1]	67	57	73	64	82	°C/W

(1) For more information about traditional and new thermal metrics, see the Semiconductor and IC Package Thermal Metrics application report.

Copyright © 2022 Texas Instruments Incorporated

5.4 Electrical Characteristics

PARAMETER	TEST CONDITIONS[1]	V_{CC} (V)	25°C			-40°C to 85°C		-55°C to 125°C		UNIT
			MIN	TYP	MAX	MIN	MAX	MIN	MAX	
HC TYPES										
V_{OH}	I_{OH} = – 20 µA	2	1.9	1.998		1.9		1.9		V
		4.5	4.4	4.499		4.4		4.4		
		6	5.9	5.999		5.9		5.9		
	$Q_{H'}$, I_{OH} = – 4 mA	4.5	3.98	4.3		3.84		3.7		
	Q_A-Q_H, I_{OH} = – 6 mA		3.98	4.3		3.84		3.7		
	$Q_{H'}$, I_{OH}= – 5.2 mA	6	5.48	5.8		5.34		5.2		
	Q_A-Q_H, I_{OH} = – 57.8 mA		5.48	5.8		5.34		5.2		
V_{OL}	I_{OL} = 20 µA	2		0.002	0.1		0.1		0.1	V
		4.5		0.001	0.1		0.1		0.1	
		6		0.001	0.1		0.1		0.1	
	$Q_{H'}$, I_{OL} = 4 mA	4.5		0.17	0.26		0.33		0.4	V
	Q_A-Q_H, I_{OL} = 6 mA			0.17	0.26		0.33		0.4	V
	$Q_{H'}$, I_{OL}= 5.2 mA	6		0.15	0.26		0.33		0.4	V
	Q_A-Q_H, I_{OL} = 7.8 mA			0.15	0.26		0.33		0.4	V
I_I	V_I = V_{CC} or 0	6		±0.1	±100		±1000		±1000	nA
I_{OZ}	V_O = V_{CC} or 0, QA-Q_H	6		±0.01	±0.5		±5		±10	µA
I_{CC}	V_I = V_{CC} or 0, I_O = 0	6			8		80		160	µA
C_i		2 to 6		3	10		10		10	pF

(1) V_I = V_{IH} or V_{IL}

5.5 Timing Requirements

PARAMETER			V_{CC} (V)	25°C		-40°C to 85°C		-55°C to 125°C		UNIT
				MIN	MAX	MIN	MAX	MIN	MAX	
HC TYPES										
f_{clock}	Clock frequency		2		6		5		4.2	MHz
			4.5		31		25		21	
			6		36		29		25	
t_W	Pulse duration	SRCLK or RCLK high or low	2	80		100		120		ns
			4.5	16		20		24		
			6	14		17		20		
		$\overline{\text{SRCLR}}$ low	2	80		100		120		
			4.5	16		20		24		
			6	14		17		20		
t_{SU}	Setup time	SER before SRCLK↑	2	100		125		150		ns
			4.5	20		25		30		
			6	17		21		25		
		SRCLK↑ before RCLK↑ (1)	2	75		94		113		
			4.5	15		19		23		
			6	13		16		19		
		$\overline{\text{SRCLR}}$ low before RCLK↑	2	50		65		75		
			4.5	10		13		15		
			6	9		11		13		
		$\overline{\text{SRCLR}}$ high (inactive) before SRCLK↑	2	50		60		75		
			4.5	10		12		15		
			6	9		11		13		
t_h	Hold time, SER after SRCLK↑		2	0		0		0		ns
			4.5	0		0		0		
			6	0		0		0		

(1) This setup time allows the storage register to receive stable data from the shift register. The clocks can be tied together, in which case the shift register is one clock pulse ahead of the storage register.

Copyright © 2022 Texas Instruments Incorporated

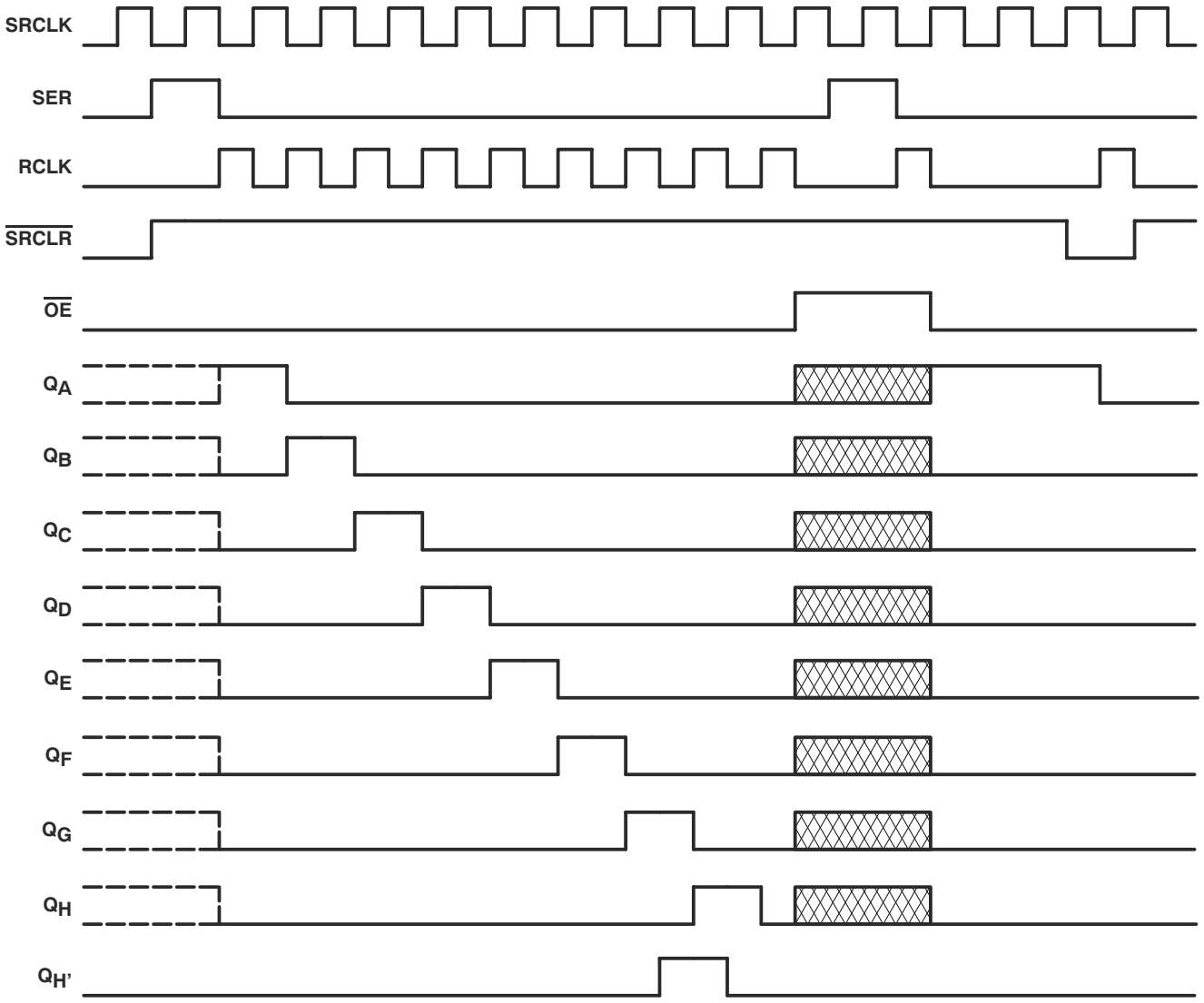

NOTE: implies that the output is in 3-State mode.

Timing Diagram

5.6 Switching Characteristics

over operating free-air temperature range, C_L = 50pF (unless otherwise noted) (Figure 6)

PARAMETER	FROM (INPUT)	TO (OUTPUT)	V_{CC}	T_A = 25°C			T_A=-40°C to 85°C		T_A = -55°C to 125°C		UNIT
				MIN	TYP	MAX	MIN	MAX	MIN	MAX	
f_{max}			2	6	26		5		4.2		MHz
			4.5	31	38		25		21		
			6	36	42		29		25		
t_{pd}	SRCLK	$Q_{H'}$	2		50	160		200		240	ns
			4.5		17	32		40		48	
			6		14	27		34		41	
	RCLK	Q_A-Q_H	2		50	150		187		225	
			4.5		17	30		37		45	
			6		14	26		32		38	
t_{PHL}	$\overline{SRCLR}$	$Q_{H'}$	2		51	175		219		261	ns
			4.5		18	35		44		52	
			6		15	30		37		44	
t_{en}	$\overline{OE}$	Q_A-Q_H	2		40	150		187		225	ns
			4.5		15	30		37		45	
			6		13	26		32		38	
t_{dis}	$\overline{OE}$	Q_A-Q_H	2		42	200		250		300	ns
			4.5		23	40		50		60	
			6		20	34		43		51	
t_t		Q_A-Q_H	2		28	60		75		90	ns
			4.5		8	12		15		18	
			6		6	10		13		15	
		$Q_{H'}$	2		28	75		95		110	
			4.5		8	15		19		22	
			6		6	13		16		19	

5.6 Switching Characteristics

over operating free-air temperature range, C_L = 150pF (unless otherwise noted) (Figure 6)

PARAMETER	FROM (INPUT)	TO (OUTPUT)	V_{CC}	T_A = 25°C			T_A=-40°C to 85°C		T_A = -55°C to 125°C		UNIT
				MIN	TYP	MAX	MIN	MAX	MIN	MAX	
f_{pd}	RCLK	Q_A-Q_H	2		60	200		250		300	MHz
			4.5		22	40		50		60	
			6		19	34		43		51	
t_{en}	$\overline{OE}$	Q_A-$Q_{H'}$	2		70	200		250		298	ns
			4.5		2340	40		50		60	
			6		19	34		43		51	
t_t		Q_A-Q_H	2		45	210		265		315	ns
			4.5		17	42		53		63	
			6		13	36		45		53	

Copyright © 2022 Texas Instruments Incorporated

5.7 Operating Characteristics

T_A = 25°C

		TEST CONDITIONS	TYP	UNIT
C_{pd}	Power dissipation capacitance	No load	400	pF

6 Parameter Measurement Information

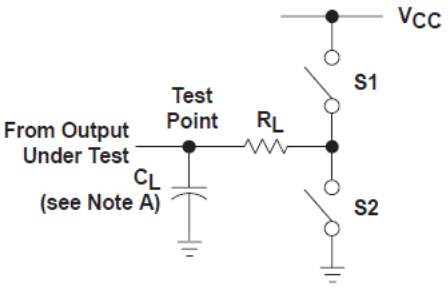

LOAD CIRCUIT

PARAMETER		R_L	C_L	S1	S2
t_{en}	t_{PZH}	1 kΩ	50 pF or 150 pF	Open	Closed
	t_{PZL}			Closed	Open
t_{dis}	t_{PHZ}	1 kΩ	50 pF	Open	Closed
	t_{PLZ}			Closed	Open
t_{pd} or t_t		--	50 pF or 150 pF	Open	Open

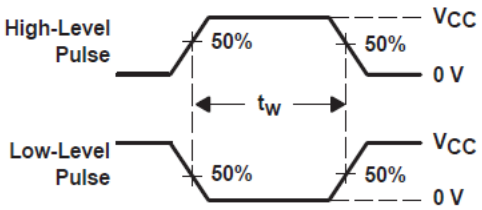

VOLTAGE WAVEFORMS
PULSE DURATIONS

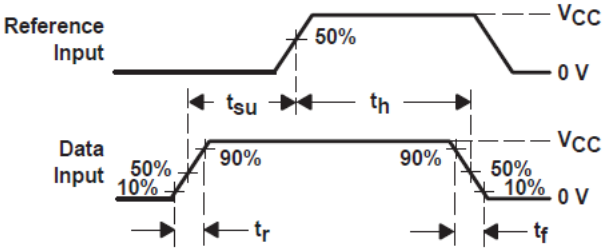

VOLTAGE WAVEFORMS
SETUP AND HOLD AND INPUT RISE AND FALL TIMES

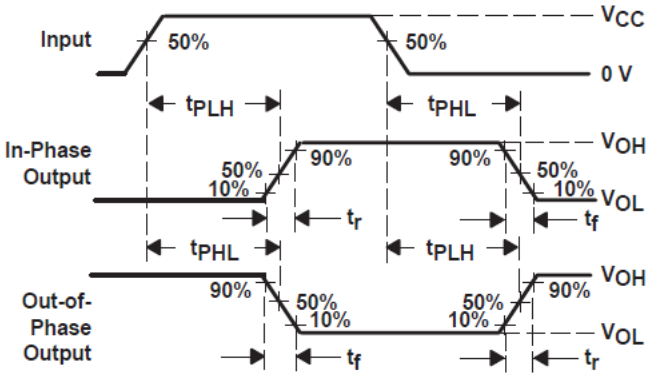

VOLTAGE WAVEFORMS
PROPAGATION DELAY AND OUTPUT TRANSITION TIMES

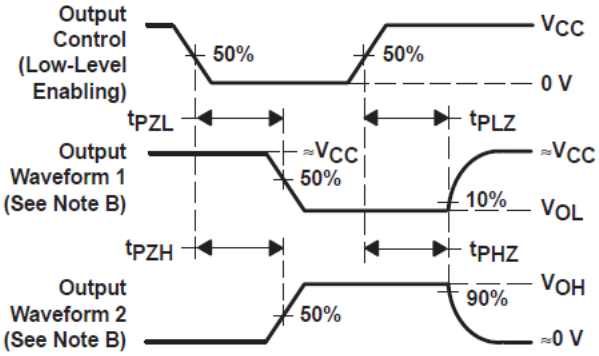

VOLTAGE WAVEFORMS
ENABLE AND DISABLE TIMES FOR 3-STATE OUTPUTS

NOTES:
A. C_L includes probe and test-fixture capacitance.
B. Waveform 1 is for an output with internal conditions such that the output is low, except when disabled by the output control. Waveform 2 is for an output with internal conditions such that the output is high, except when disabled by the output control.
C. Phase relationships between waveforms were chosen arbitrarily. All input pulses are supplied by generators having the following characteristics: PRR ≤ 1 MHz, Z_O = 50 Ω, t_r = 6 ns, t_f = 6 ns.
D. For clock inputs, f_{max} is measured when the input duty cycle is 50%.
E. The outputs are measured one at a time, with one input transition per measurement.
F. t_{PLZ} and t_{PHZ} are the same as t_{dis}.
G. t_{PZL} and t_{PZH} are the same as t_{en}.
H. t_{PLH} and t_{PHL} are the same as t_{pd}.

Figure 6-1. Load Curcuit and Voltage Waveforms

Copyright © 2022 Texas Instruments Incorporated

7 Detailed Description

7.1 Overview

The CD74HC595 device contains an 8-bit serial-in, parallel-out shift register that feeds an 8-bit D-type storage register. The storage register has parallel 3-state outputs. Separate clocks are provided for both the shift and storage registers. The shift register has a direct overriding clear ($\overline{SRCLR}$) input, serial (SER) input, and serial output for cascading. When the output-enable ($\overline{OE}$) input is high, the outputs are in the high-impedance state.

Both the shift register clock (SRCLK) and storage register clock (RCLK) are positive-edge triggered. If both clocks are connected together, the shift register always is one clock pulse ahead of the storage register.

7.2 Functional Block Diagram

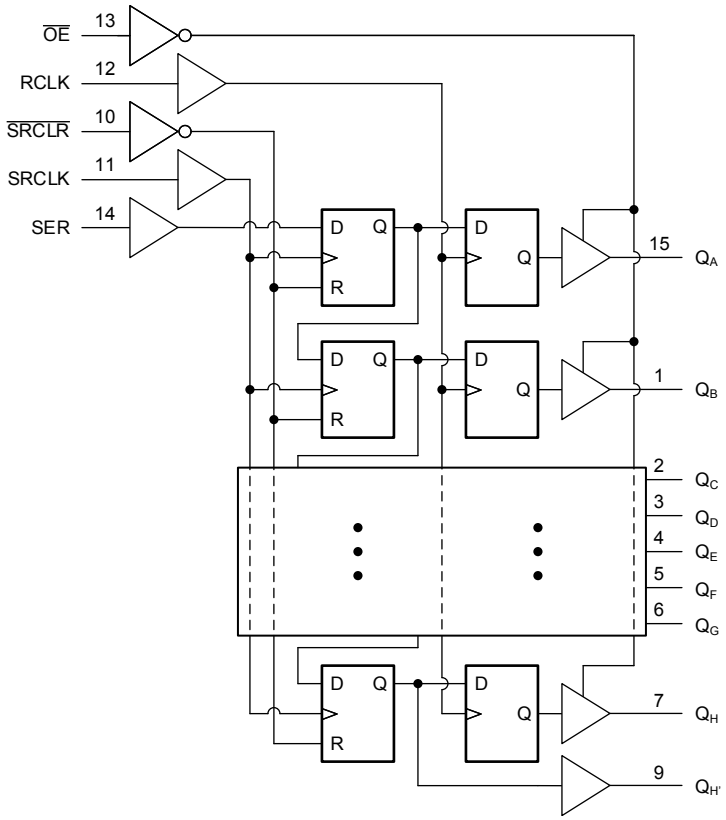

7.3 Device Functional Modes

Table 7-1 lists the functional modes of the CD74HC595.

Table 7-1. Function Table

INPUTS					FUNCTION
SER	SRCLK	$\overline{SRCLR}$	RCLK	$\overline{OE}$	
X	X	X	X	H	Outputs Q_A – Q_H are disabled
X	X	X	X	L	Outputs Q_A – Q_H are enabled.
X	X	L	X	X	Shift register is cleared.
L	↑	H	X	X	First stage of the shift register goes low. Other stages store the data of previous stage, respectively.
H	↑	H	X	X	First stage of the shift register goes high. Other stages store the data of previous stage, respectively.
X	X	H	↑	X	Shift-register data is stored in the storage register.
X	↑	H	↑	X	Data in shift register is stored in the storage register, the data is then shifted through.

Copyright © 2022 Texas Instruments Incorporated

8 Power Supply Recommendations

The power supply can be any voltage between the minimum and maximum supply voltage rating located in the *Recommended Operating Conditions*. Each V_{CC} terminal should have a good bypass capacitor to prevent power disturbance. A 0.1-µF capacitor is recommended for this device. It is acceptable to parallel multiple bypass caps to reject different frequencies of noise. The 0.1-µF and 1-µF capacitors are commonly used in parallel. The bypass capacitor should be installed as close to the power terminal as possible for best results.

9 Layout

9.1 Layout Guidelines

When using multiple-input and multiple-channel logic devices inputs must not ever be left floating. In many cases, functions or parts of functions of digital logic devices are unused; for example, when only two inputs of a triple-input AND gate are used or only 3 of the 4 buffer gates are used. Such unused input pins must not be left unconnected because the undefined voltages at the outside connections result in undefined operational states. All unused inputs of digital logic devices must be connected to a logic high or logic low voltage, as defined by the input voltage specifications, to prevent them from floating. The logic level that must be applied to any particular unused input depends on the function of the device. Generally, the inputs are tied to GND or V_{CC}, whichever makes more sense for the logic function or is more convenient.

Copyright © 2022 Texas Instruments Incorporated

10 Device and Documentation Support

TI offers an extensive line of development tools. Tools and software to evaluate the performance of the device, generate code, and develop solutions are listed below.

10.1 Documentation Support

10.1.1 Related Documentation

10.2 Receiving Notification of Documentation Updates

To receive notification of documentation updates, navigate to the device product folder on ti.com. Click on *Subscribe to updates* to register and receive a weekly digest of any product information that has changed. For change details, review the revision history included in any revised document.

10.3 Support Resources

TI E2E™ support forums are an engineer's go-to source for fast, verified answers and design help — straight from the experts. Search existing answers or ask your own question to get the quick design help you need.

Linked content is provided "AS IS" by the respective contributors. They do not constitute TI specifications and do not necessarily reflect TI's views; see TI's Terms of Use.

10.4 Trademarks

TI E2E™ is a trademark of Texas Instruments.
All trademarks are the property of their respective owners.

10.5 Electrostatic Discharge Caution

This integrated circuit can be damaged by ESD. Texas Instruments recommends that all integrated circuits be handled with appropriate precautions. Failure to observe proper handling and installation procedures can cause damage.

ESD damage can range from subtle performance degradation to complete device failure. Precision integrated circuits may be more susceptible to damage because very small parametric changes could cause the device not to meet its published specifications.

10.6 Glossary

TI Glossary	This glossary lists and explains terms, acronyms, and definitions.

11 Mechanical, Packaging, and Orderable Information

The following pages include mechanical, packaging, and orderable information. This information is the most current data available for the designated devices. This data is subject to change without notice and revision of this document. For browser-based versions of this data sheet, refer to the left-hand navigation.

Copyright © 2022 Texas Instruments Incorporated

PACKAGING INFORMATION

Orderable Device	Status (1)	Package Type	Package Drawing	Pins	Package Qty	Eco Plan (2)	Lead finish/ Ball material (6)	MSL Peak Temp (3)	Op Temp (°C)	Device Marking (4/5)	Samples
CD74HC595DW	ACTIVE	SOIC	DW	16	40	RoHS & Green	NIPDAU	Level-1-260C-UNLIM	-55 to 125	HC595M	Samples
CD74HC595DWR	ACTIVE	SOIC	DW	16	2000	RoHS & Green	NIPDAU	Level-1-260C-UNLIM	-55 to 125	HC595M	Samples
CD74HC595E	ACTIVE	PDIP	N	16	25	RoHS & Green	NIPDAU	N / A for Pkg Type	-55 to 125	CD74HC595E	Samples
CD74HC595EE4	ACTIVE	PDIP	N	16	25	RoHS & Green	NIPDAU	N / A for Pkg Type	-55 to 125	CD74HC595E	Samples
CD74HC595M	ACTIVE	SOIC	D	16	40	RoHS & Green	NIPDAU	Level-1-260C-UNLIM	-55 to 125	HC595M	Samples
CD74HC595M96	ACTIVE	SOIC	D	16	2500	RoHS & Green	NIPDAU	Level-1-260C-UNLIM	-55 to 125	HC595M	Samples
CD74HC595MG4	ACTIVE	SOIC	D	16	40	RoHS & Green	NIPDAU	Level-1-260C-UNLIM	-55 to 125	HC595M	Samples
CD74HC595MT	ACTIVE	SOIC	D	16	250	RoHS & Green	NIPDAU	Level-1-260C-UNLIM	-55 to 125	HC595M	Samples
CD74HC595NSR	ACTIVE	SO	NS	16	2000	RoHS & Green	NIPDAU	Level-1-260C-UNLIM	-55 to 125	HC595M	Samples
CD74HC595SM96	ACTIVE	SSOP	DB	16	2000	RoHS & Green	NIPDAU	Level-1-260C-UNLIM	-55 to 125	HJ595	Samples

(1) The marketing status values are defined as follows:
ACTIVE: Product device recommended for new designs.
LIFEBUY: TI has announced that the device will be discontinued, and a lifetime-buy period is in effect.
NRND: Not recommended for new designs. Device is in production to support existing customers, but TI does not recommend using this part in a new design.
PREVIEW: Device has been announced but is not in production. Samples may or may not be available.
OBSOLETE: TI has discontinued the production of the device.

(2) **RoHS:** TI defines "RoHS" to mean semiconductor products that are compliant with the current EU RoHS requirements for all 10 RoHS substances, including the requirement that RoHS substance do not exceed 0.1% by weight in homogeneous materials. Where designed to be soldered at high temperatures, "RoHS" products are suitable for use in specified lead-free processes. TI may reference these types of products as "Pb-Free".
RoHS Exempt: TI defines "RoHS Exempt" to mean products that contain lead but are compliant with EU RoHS pursuant to a specific EU RoHS exemption.
Green: TI defines "Green" to mean the content of Chlorine (Cl) and Bromine (Br) based flame retardants meet JS709B low halogen requirements of <=1000ppm threshold. Antimony trioxide based flame retardants must also meet the <=1000ppm threshold requirement.

(3) MSL, Peak Temp. - The Moisture Sensitivity Level rating according to the JEDEC industry standard classifications, and peak solder temperature.

(4) There may be additional marking, which relates to the logo, the lot trace code information, or the environmental category on the device.

(5) Multiple Device Markings will be inside parentheses. Only one Device Marking contained in parentheses and separated by a "~" will appear on a device. If a line is indented then it is a continuation of the previous line and the two combined represent the entire Device Marking for that device.

(6) Lead finish/Ball material - Orderable Devices may have multiple material finish options. Finish options are separated by a vertical ruled line. Lead finish/Ball material values may wrap to two lines if the finish value exceeds the maximum column width.

Important Information and Disclaimer: The information provided on this page represents TI's knowledge and belief as of the date that it is provided. TI bases its knowledge and belief on information provided by third parties, and makes no representation or warranty as to the accuracy of such information. Efforts are underway to better integrate information from third parties. TI has taken and continues to take reasonable steps to provide representative and accurate information but may not have conducted destructive testing or chemical analysis on incoming materials and chemicals. TI and TI suppliers consider certain information to be proprietary, and thus CAS numbers and other limited information may not be available for release.

In no event shall TI's liability arising out of such information exceed the total purchase price of the TI part(s) at issue in this document sold by TI to Customer on an annual basis.

TAPE AND REEL INFORMATION

REEL DIMENSIONS

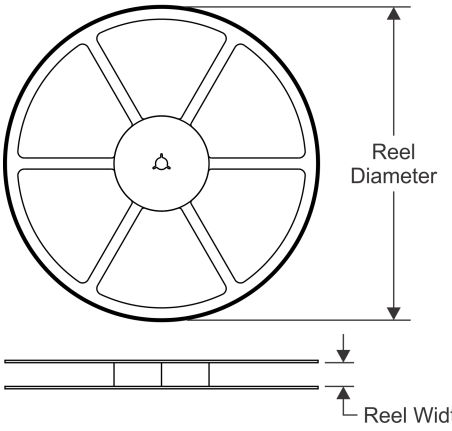

TAPE DIMENSIONS

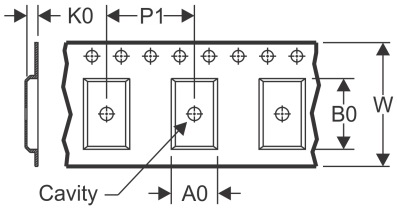

A0	Dimension designed to accommodate the component width
B0	Dimension designed to accommodate the component length
K0	Dimension designed to accommodate the component thickness
W	Overall width of the carrier tape
P1	Pitch between successive cavity centers

QUADRANT ASSIGNMENTS FOR PIN 1 ORIENTATION IN TAPE

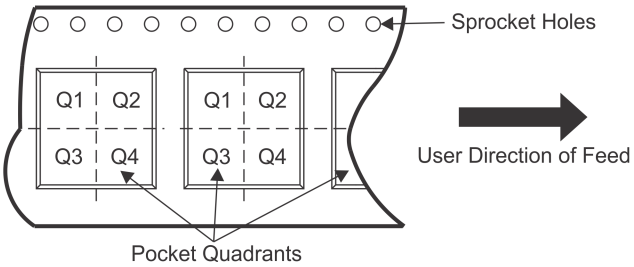

*All dimensions are nominal

Device	Package Type	Package Drawing	Pins	SPQ	Reel Diameter (mm)	Reel Width W1 (mm)	A0 (mm)	B0 (mm)	K0 (mm)	P1 (mm)	W (mm)	Pin1 Quadrant
CD74HC595DWR	SOIC	DW	16	2000	330.0	16.4	10.75	10.7	2.7	12.0	16.0	Q1
CD74HC595M96	SOIC	D	16	2500	330.0	16.4	6.5	10.3	2.1	8.0	16.0	Q1
CD74HC595NSR	SO	NS	16	2000	330.0	16.4	8.2	10.5	2.5	12.0	16.0	Q1
CD74HC595SM96	SSOP	DB	16	2000	330.0	16.4	8.35	6.6	2.4	12.0	16.0	Q1

TAPE AND REEL BOX DIMENSIONS

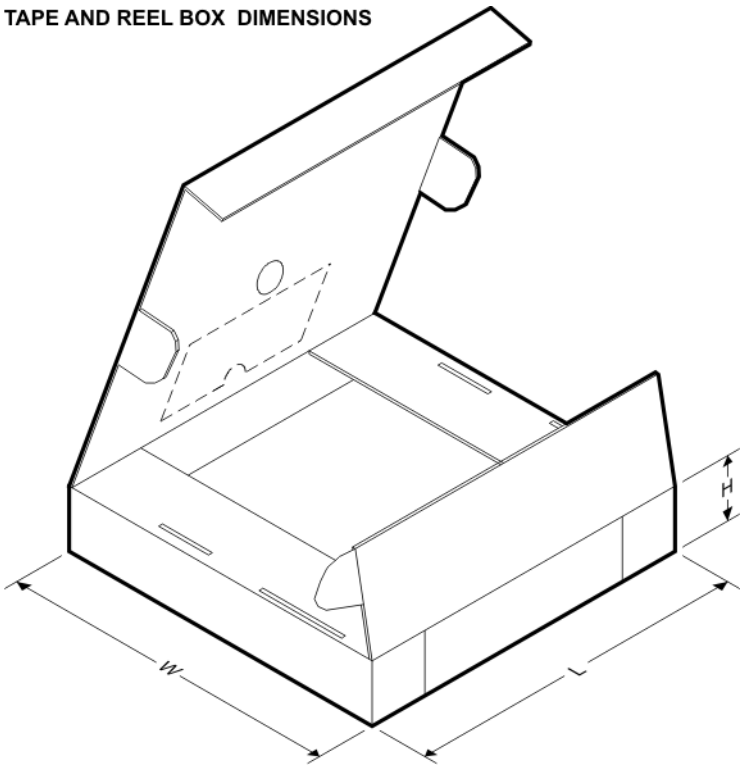

*All dimensions are nominal

Device	Package Type	Package Drawing	Pins	SPQ	Length (mm)	Width (mm)	Height (mm)
CD74HC595DWR	SOIC	DW	16	2000	350.0	350.0	43.0
CD74HC595M96	SOIC	D	16	2500	340.5	336.1	32.0
CD74HC595NSR	SO	NS	16	2000	853.0	449.0	35.0
CD74HC595SM96	SSOP	DB	16	2000	853.0	449.0	35.0

TUBE

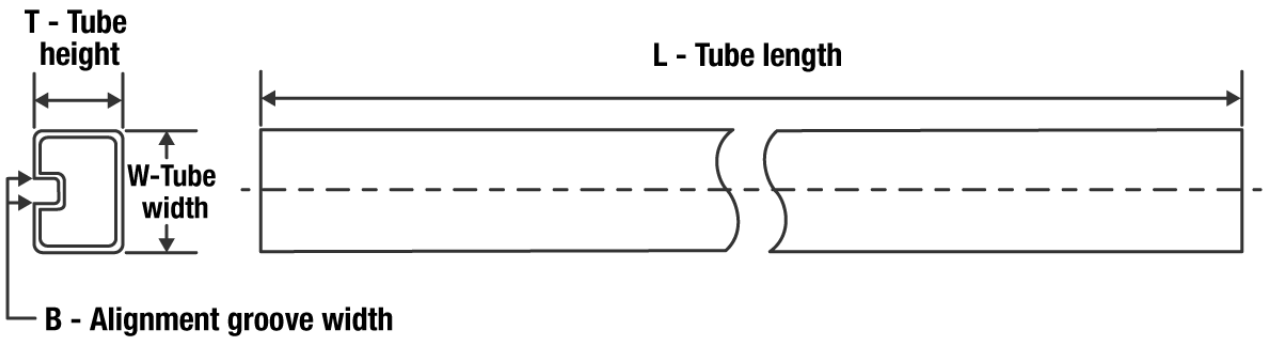

*All dimensions are nominal

Device	Package Name	Package Type	Pins	SPQ	L (mm)	W (mm)	T (µm)	B (mm)
CD74HC595DW	DW	SOIC	16	40	506.98	12.7	4826	6.6
CD74HC595E	N	PDIP	16	25	506	13.97	11230	4.32
CD74HC595EE4	N	PDIP	16	25	506	13.97	11230	4.32
CD74HC595M	D	SOIC	16	40	507	8	3940	4.32
CD74HC595MG4	D	SOIC	16	40	507	8	3940	4.32

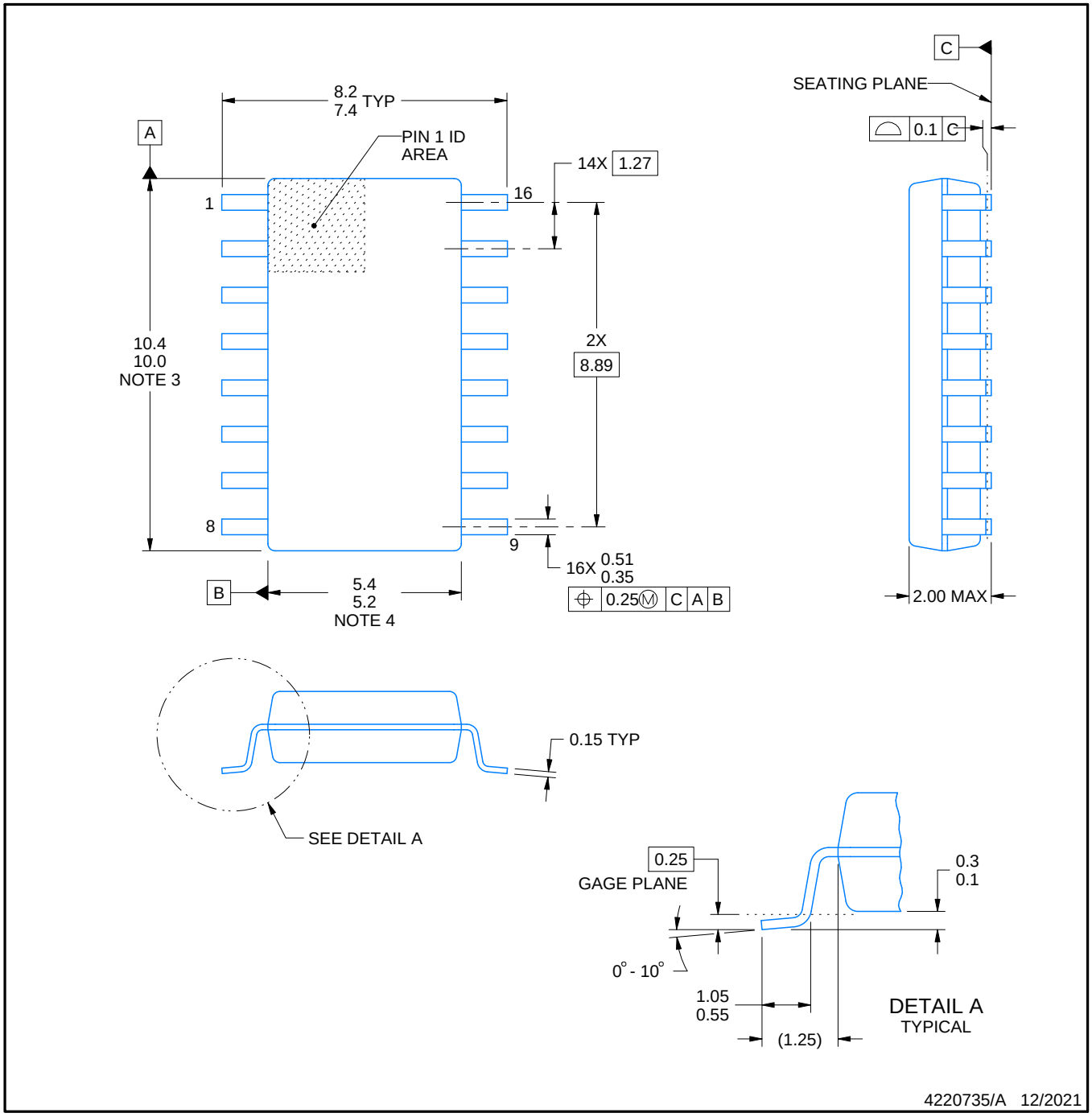

NOTES:

1. All linear dimensions are in millimeters. Dimensions in parenthesis are for reference only. Dimensioning and tolerancing per ASME Y14.5M.
2. This drawing is subject to change without notice.
3. This dimension does not include mold flash, protrusions, or gate burrs. Mold flash, protrusions, or gate burrs shall not exceed 0.15 mm, per side.
4. This dimension does not include interlead flash. Interlead flash shall not exceed 0.25 mm, per side.

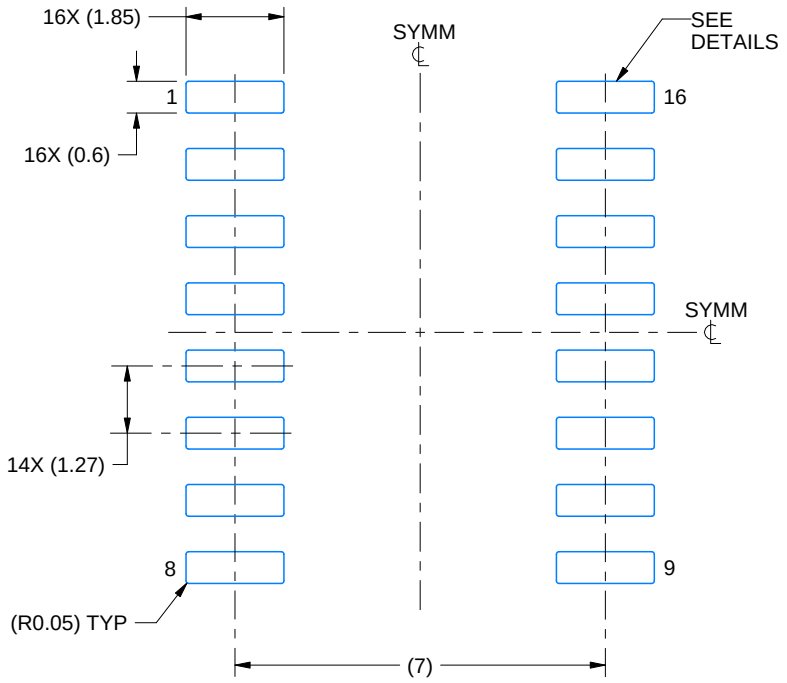

LAND PATTERN EXAMPLE
SCALE:7X

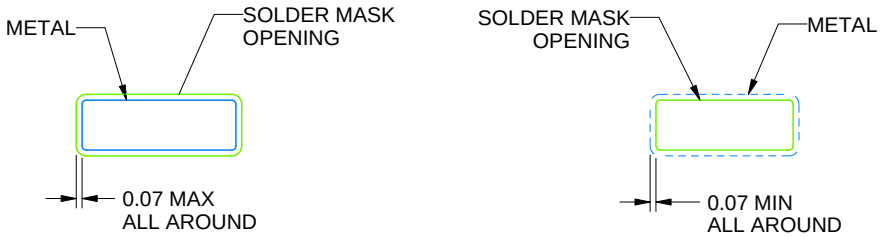

NON SOLDER MASK DEFINED

SOLDER MASK DEFINED

SOLDER MASK DETAILS

4220735/A 12/2021

NOTES: (continued)

5. Publication IPC-7351 may have alternate designs.
6. Solder mask tolerances between and around signal pads can vary based on board fabrication site.

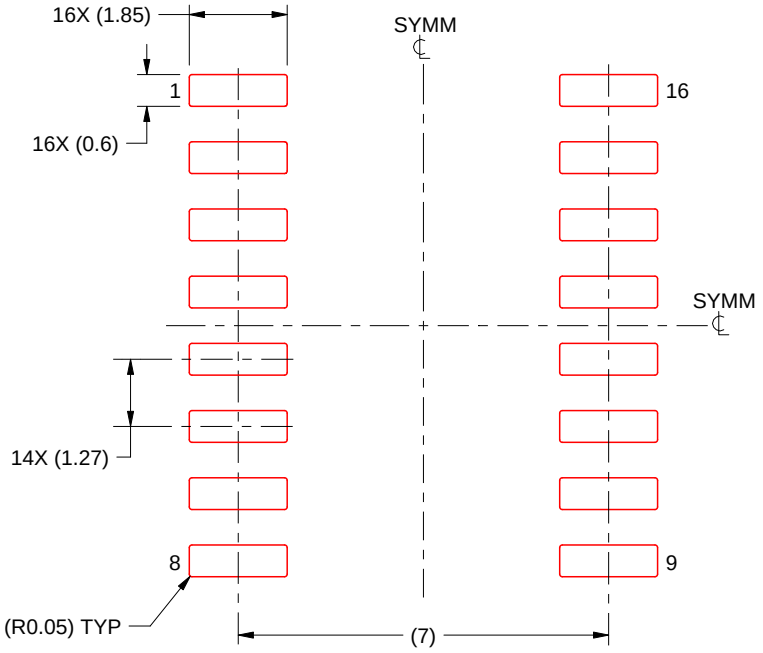

SOLDER PASTE EXAMPLE
BASED ON 0.125 mm THICK STENCIL
SCALE:7X

4220735/A 12/2021

NOTES: (continued)

7. Laser cutting apertures with trapezoidal walls and rounded corners may offer better paste release. IPC-7525 may have alternate design recommendations.
8. Board assembly site may have different recommendations for stencil design.

D (R–PDSO–G16) PLASTIC SMALL OUTLINE

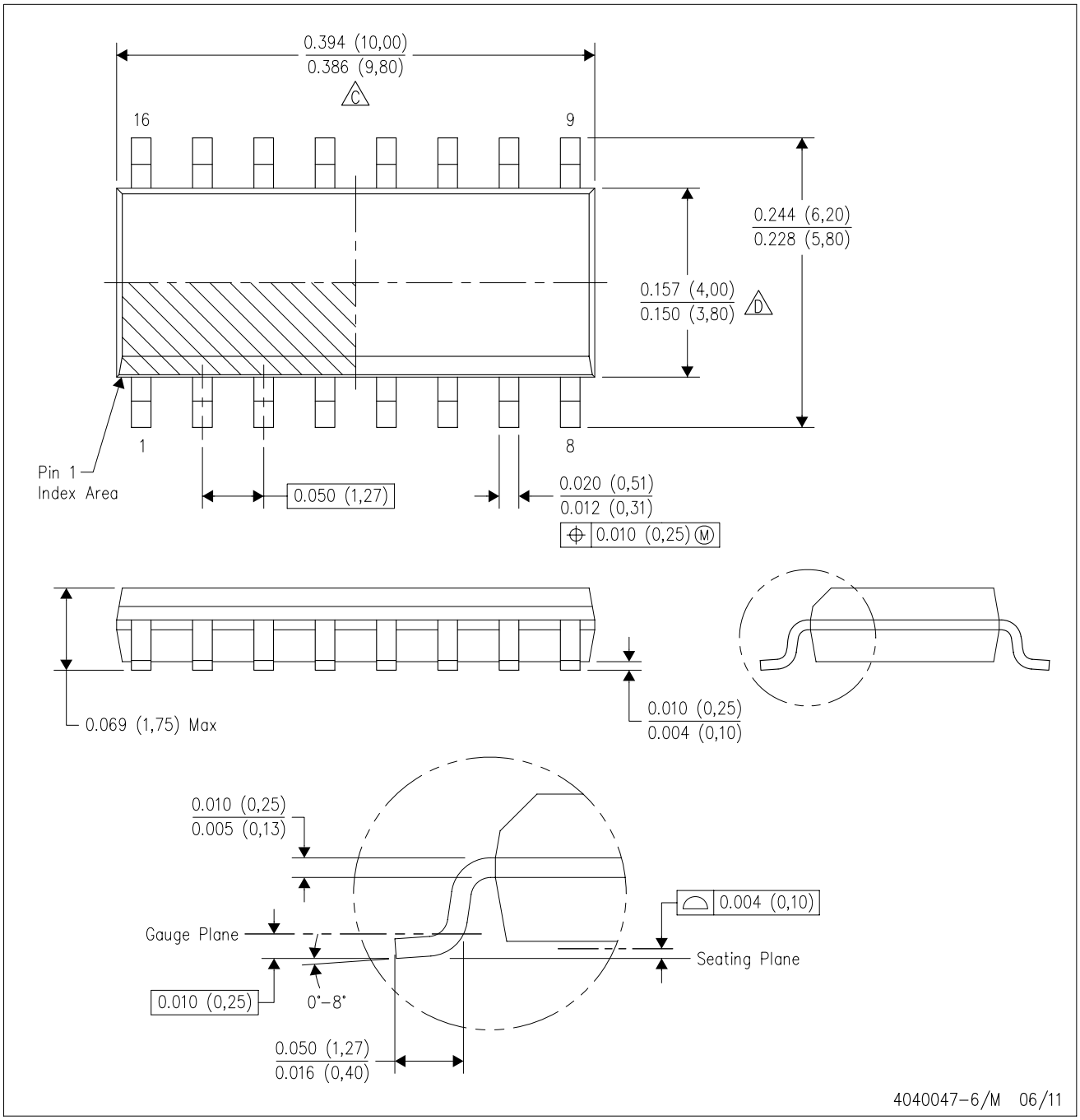

NOTES:
A. All linear dimensions are in inches (millimeters).
B. This drawing is subject to change without notice.
C. Body length does not include mold flash, protrusions, or gate burrs. Mold flash, protrusions, or gate burrs shall not exceed 0.006 (0,15) each side.
D. Body width does not include interlead flash. Interlead flash shall not exceed 0.017 (0,43) each side.
E. Reference JEDEC MS–012 variation AC.

D (R–PDSO–G16) PLASTIC SMALL OUTLINE

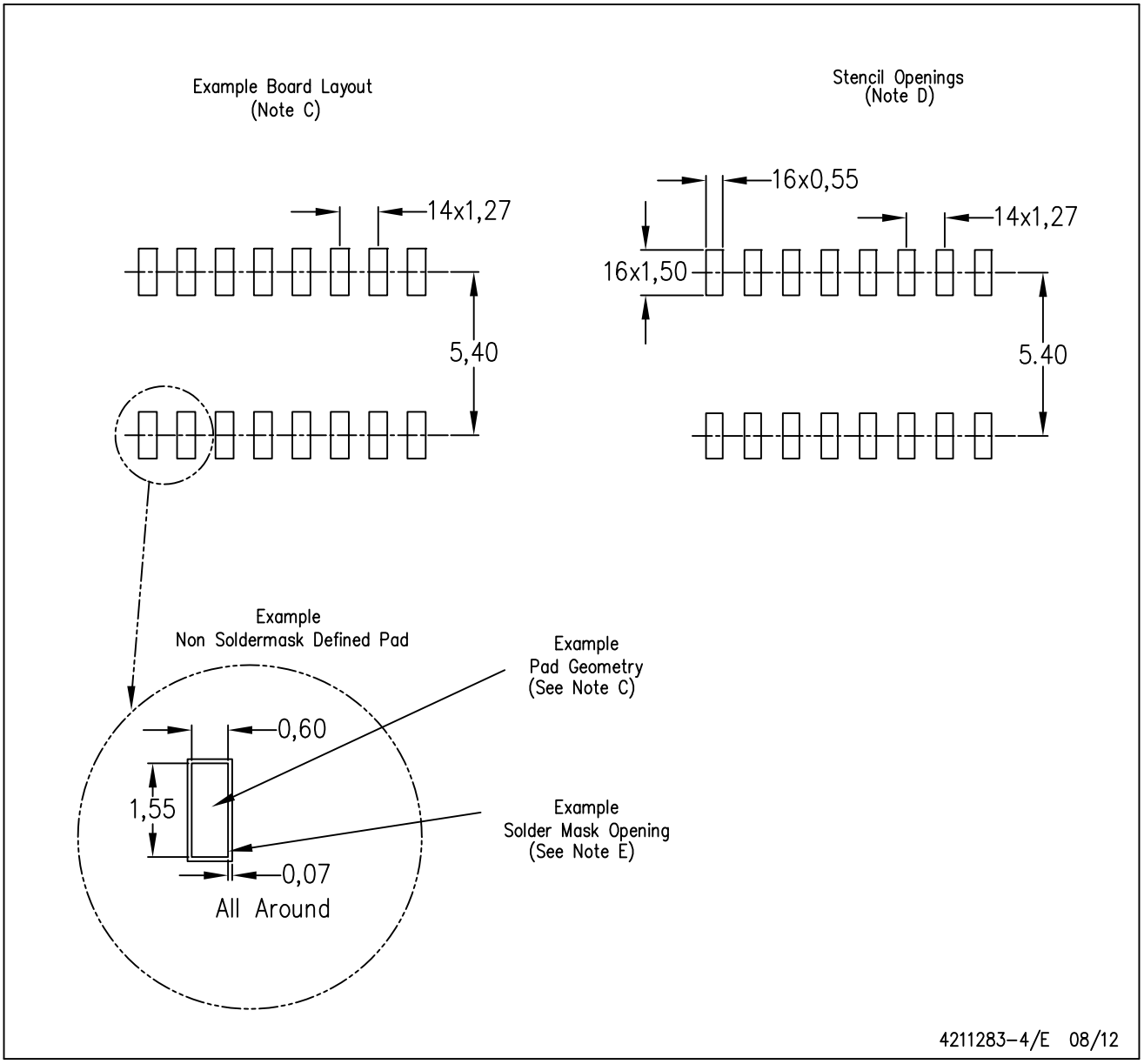

NOTES:
A. All linear dimensions are in millimeters.
B. This drawing is subject to change without notice.
C. Publication IPC–7351 is recommended for alternate designs.
D. Laser cutting apertures with trapezoidal walls and also rounding corners will offer better paste release. Customers should contact their board assembly site for stencil design recommendations. Refer to IPC–7525 for other stencil recommendations.
E. Customers should contact their board fabrication site for solder mask tolerances between and around signal pads.

MECHANICAL DATA

NS (R-PDSO-G)** **PLASTIC SMALL-OUTLINE PACKAGE**

14-PINS SHOWN

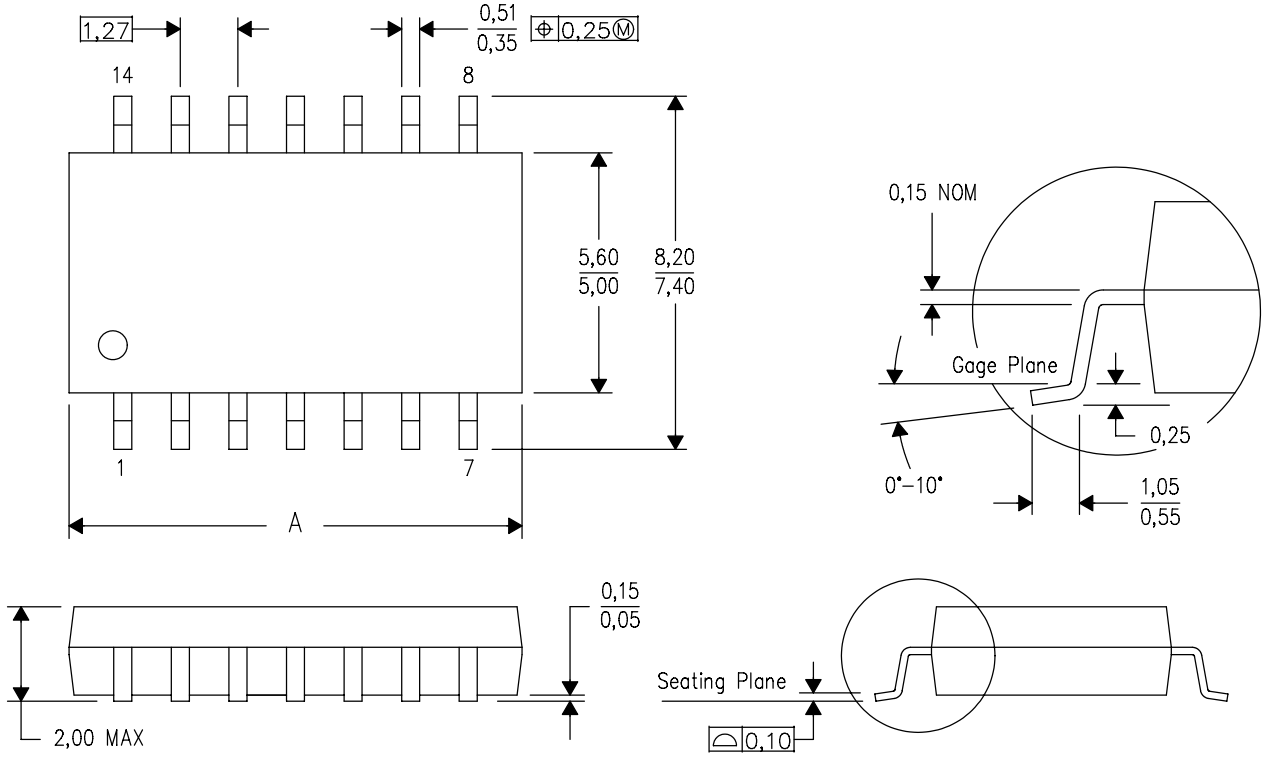

DIM \ PINS **	14	16	20	24
A MAX	10,50	10,50	12,90	15,30
A MIN	9,90	9,90	12,30	14,70

4040062/C 03/03

NOTES:
A. All linear dimensions are in millimeters.
B. This drawing is subject to change without notice.
C. Body dimensions do not include mold flash or protrusion, not to exceed 0,15.

GENERIC PACKAGE VIEW

DW 16

SOIC - 2.65 mm max height

7.5 x 10.3, 1.27 mm pitch

SMALL OUTLINE INTEGRATED CIRCUIT

This image is a representation of the package family, actual package may vary.
Refer to the product data sheet for package details.

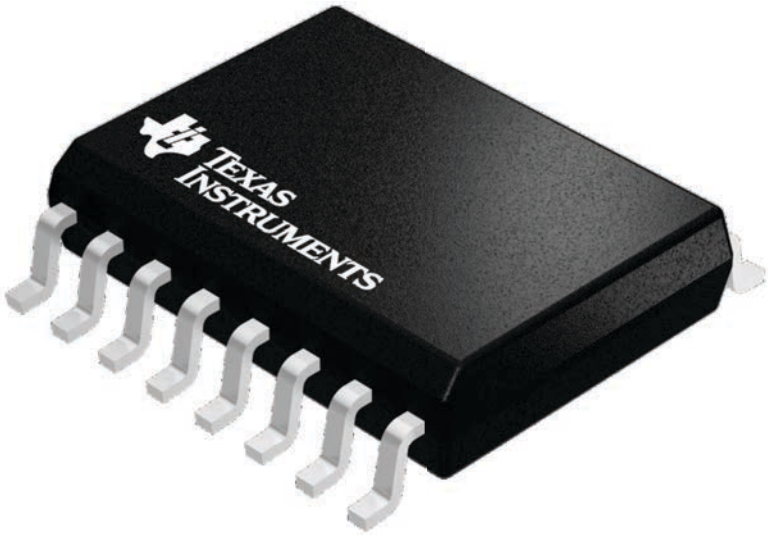

4224780/A

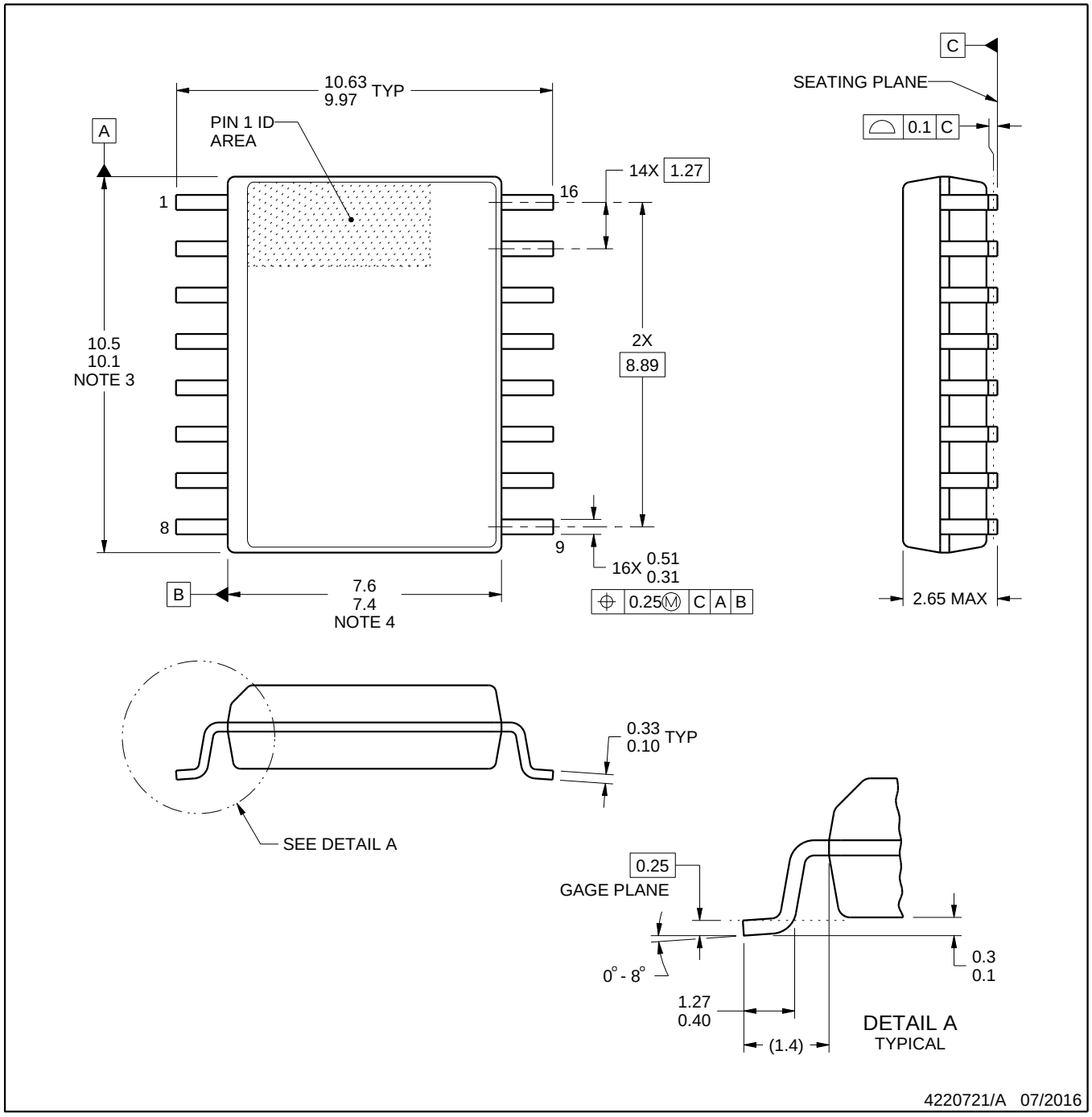

NOTES:

1. All linear dimensions are in millimeters. Dimensions in parenthesis are for reference only. Dimensioning and tolerancing per ASME Y14.5M.
2. This drawing is subject to change without notice.
3. This dimension does not include mold flash, protrusions, or gate burrs. Mold flash, protrusions, or gate burrs shall not exceed 0.15 mm, per side.
4. This dimension does not include interlead flash. Interlead flash shall not exceed 0.25 mm, per side.
5. Reference JEDEC registration MS-013.

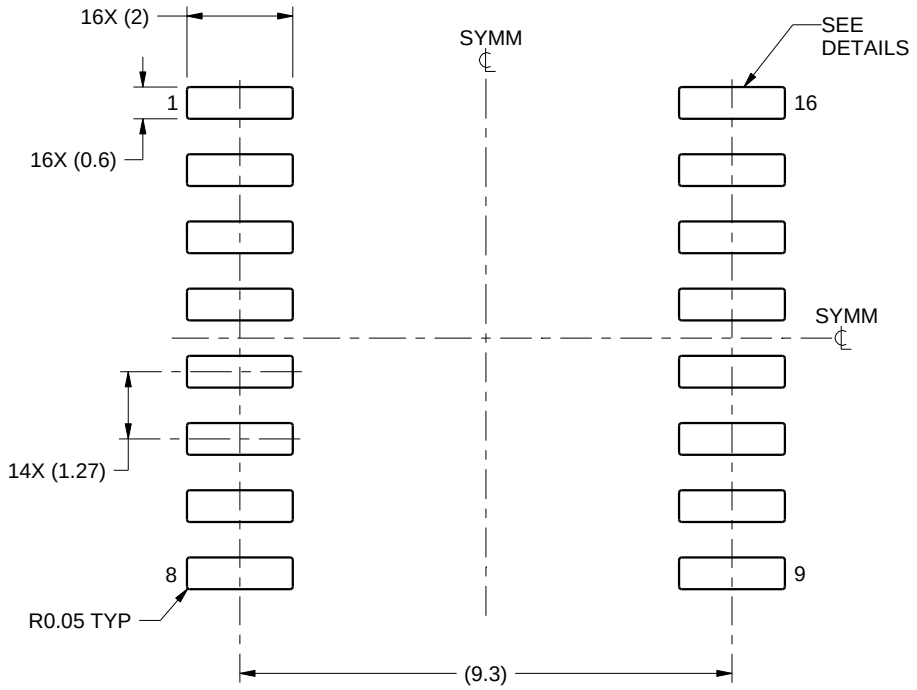

LAND PATTERN EXAMPLE
SCALE:7X

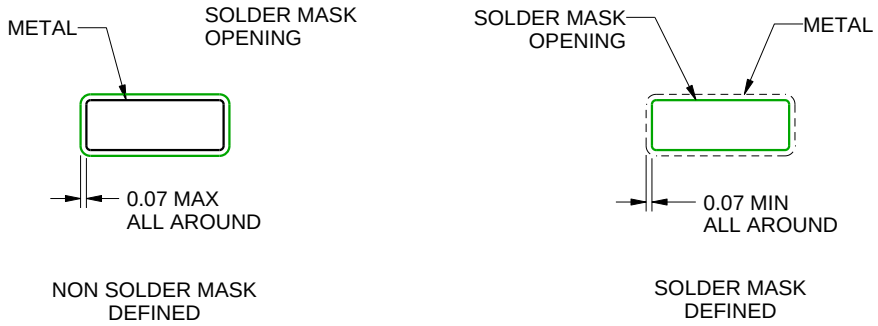

SOLDER MASK DETAILS

4220721/A 07/2016

NOTES: (continued)

6. Publication IPC-7351 may have alternate designs.
7. Solder mask tolerances between and around signal pads can vary based on board fabrication site.

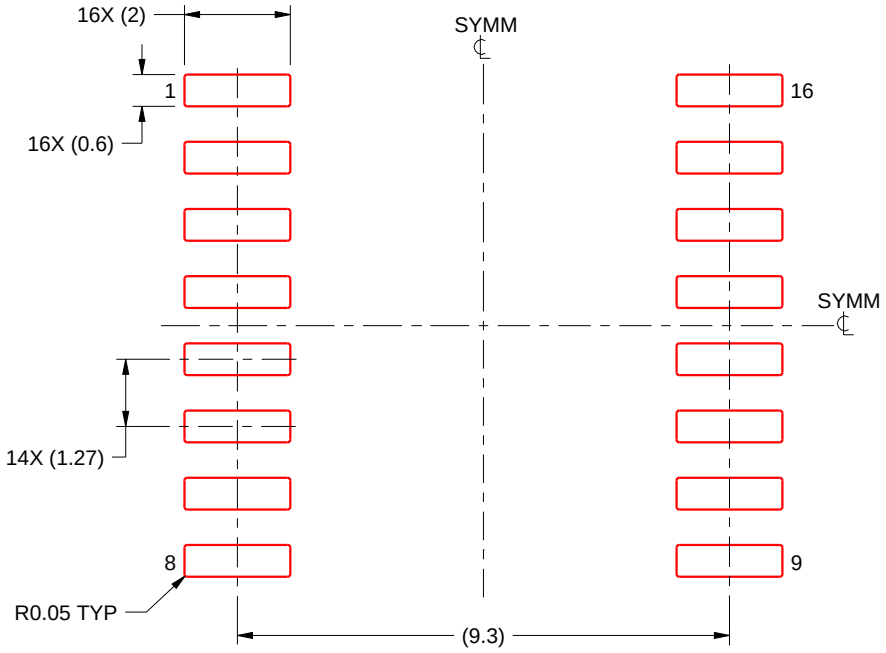

SOLDER PASTE EXAMPLE
BASED ON 0.125 mm THICK STENCIL
SCALE:7X

4220721/A 07/2016

NOTES: (continued)

8. Laser cutting apertures with trapezoidal walls and rounded corners may offer better paste release. IPC-7525 may have alternate design recommendations.
9. Board assembly site may have different recommendations for stencil design.

DB (R-PDSO-G)** **PLASTIC SMALL-OUTLINE**

28 PINS SHOWN

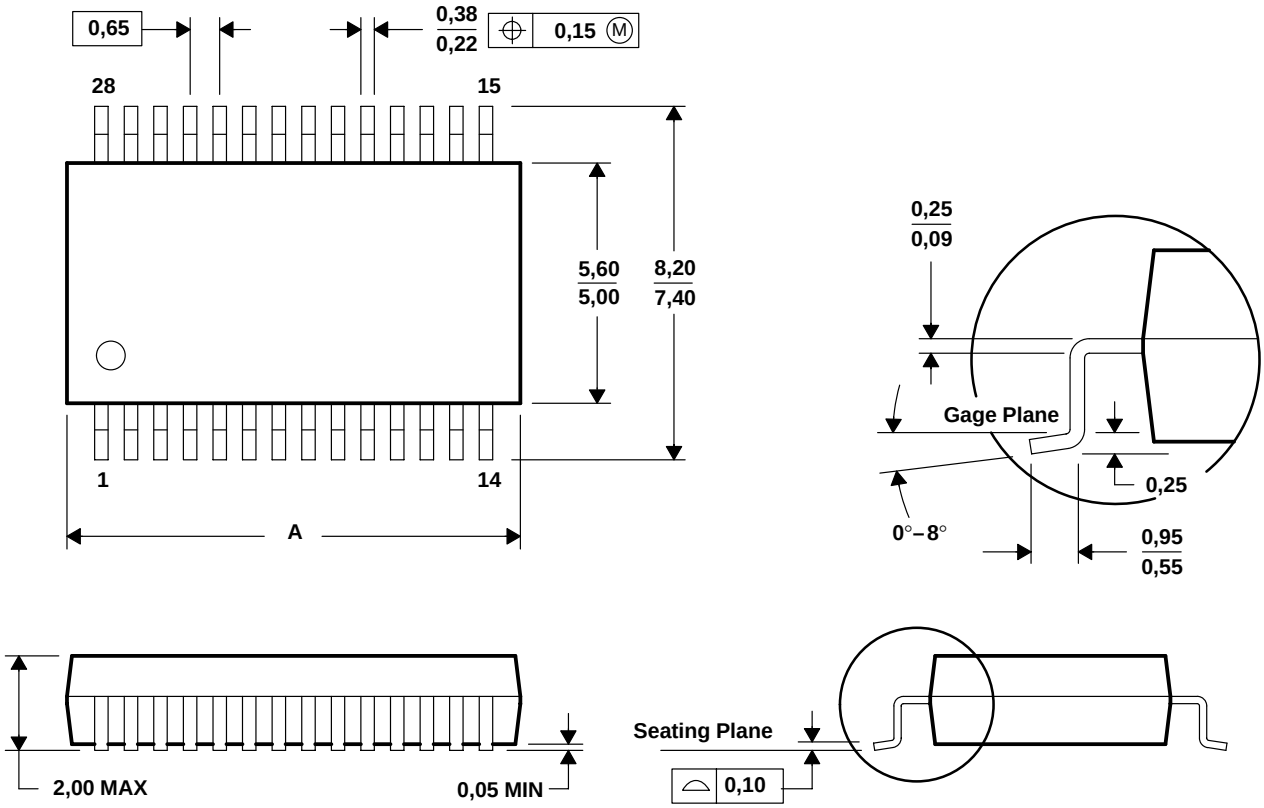

DIM \ PINS **	14	16	20	24	28	30	38
A MAX	6,50	6,50	7,50	8,50	10,50	10,50	12,90
A MIN	5,90	5,90	6,90	7,90	9,90	9,90	12,30

4040065 /E 12/01

NOTES: A. All linear dimensions are in millimeters.
B. This drawing is subject to change without notice.
C. Body dimensions do not include mold flash or protrusion not to exceed 0,15.
D. Falls within JEDEC MO-150

N (R–PDIP–T**) PLASTIC DUAL–IN–LINE PACKAGE

16 PINS SHOWN

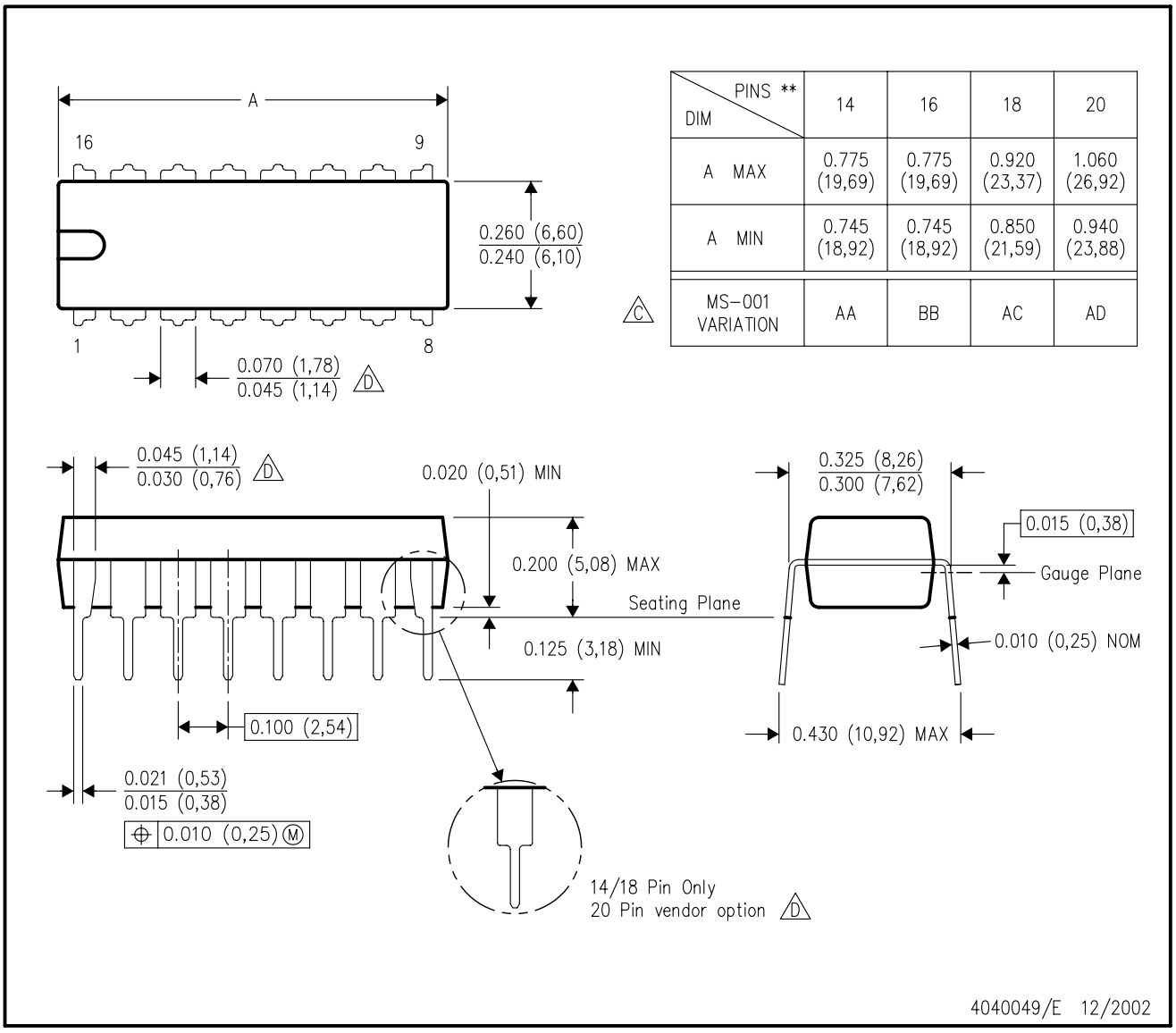

DIM \ PINS **	14	16	18	20
A MAX	0.775 (19,69)	0.775 (19,69)	0.920 (23,37)	1.060 (26,92)
A MIN	0.745 (18,92)	0.745 (18,92)	0.850 (21,59)	0.940 (23,88)
MS–001 VARIATION (C)	AA	BB	AC	AD

NOTES:
A. All linear dimensions are in inches (millimeters).
B. This drawing is subject to change without notice.
C. Falls within JEDEC MS–001, except 18 and 20 pin minimum body length (Dim A).
D. The 20 pin end lead shoulder width is a vendor option, either half or full width.

IMPORTANT NOTICE AND DISCLAIMER

TI PROVIDES TECHNICAL AND RELIABILITY DATA (INCLUDING DATA SHEETS), DESIGN RESOURCES (INCLUDING REFERENCE DESIGNS), APPLICATION OR OTHER DESIGN ADVICE, WEB TOOLS, SAFETY INFORMATION, AND OTHER RESOURCES “AS IS” AND WITH ALL FAULTS, AND DISCLAIMS ALL WARRANTIES, EXPRESS AND IMPLIED, INCLUDING WITHOUT LIMITATION ANY IMPLIED WARRANTIES OF MERCHANTABILITY, FITNESS FOR A PARTICULAR PURPOSE OR NON-INFRINGEMENT OF THIRD PARTY INTELLECTUAL PROPERTY RIGHTS.

These resources are intended for skilled developers designing with TI products. You are solely responsible for (1) selecting the appropriate TI products for your application, (2) designing, validating and testing your application, and (3) ensuring your application meets applicable standards, and any other safety, security, regulatory or other requirements.

These resources are subject to change without notice. TI grants you permission to use these resources only for development of an application that uses the TI products described in the resource. Other reproduction and display of these resources is prohibited. No license is granted to any other TI intellectual property right or to any third party intellectual property right. TI disclaims responsibility for, and you will fully indemnify TI and its representatives against, any claims, damages, costs, losses, and liabilities arising out of your use of these resources.

TI’s products are provided subject to TI’s Terms of Sale or other applicable terms available either on ti.com or provided in conjunction with such TI products. TI’s provision of these resources does not expand or otherwise alter TI’s applicable warranties or warranty disclaimers for TI products.

TI objects to and rejects any additional or different terms you may have proposed.

Mailing Address: Texas Instruments, Post Office Box 655303, Dallas, Texas 75265
Copyright © 2022, Texas Instruments Incorporated