## FEATURES

- **Available in the Texas Instruments NanoFree™ Package**
- **Optimized for 1.8-V Operation and Is 3.6-V I/O Tolerant to Support Mixed-Mode Signal Operation**
- **$I_{off}$ Supports Partial-Power-Down Mode Operation**
- **Sub-1-V Operable**
- **Max $t_{pd}$ of 1.5 ns at 1.8 V**
- **Low Power Consumption, 10-μA at 1.8 V**
- **±8-mA Output Drive at 1.8 V**
- **Latch-Up Performance Exceeds 100 mA Per JESD 78, Class II**
- **ESD Protection Exceeds JESD 22**
  - **2000-V Human-Body Model (A114-A)**
  - **200-V Machine Model (A115-A)**
  - **1000-V Charged-Device Model (C101)**

**DCT PACKAGE (TOP VIEW)**

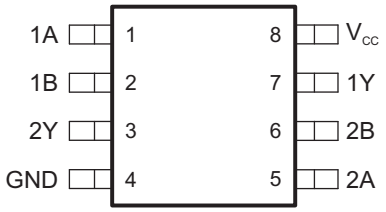


**DCU PACKAGE (TOP VIEW)**

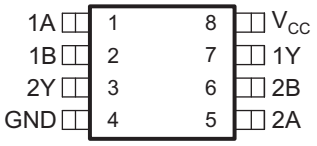


**YZP PACKAGE (BOTTOM VIEW)**

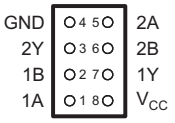


See mechanical drawings for dimensions.

## DESCRIPTION/ORDERING INFORMATION

This dual 2-input positive-AND gate is operational at 0.8-V to 2.7-V $V_{CC}$, but is designed specifically for 1.65-V to 1.95-V $V_{CC}$ operation.

The SN74AUC2G08 performs the Boolean function $A \bullet B$ or $Y = \overline{\overline{A} + \overline{B}}$ in positive logic.

NanoFree™ package technology is a major breakthrough in IC packaging concepts, using the die as the package.

This device is fully specified for partial-power-down applications using $I_{off}$. The $I_{off}$ circuitry disables the outputs, preventing damaging current backflow through the device when it is powered down.

For more information about AUC Little Logic devices, please refer to the TI application report, *Applications of Texas Instruments AUC Sub-1-V Little Logic Devices*, literature number SCEA027.

### ORDERING INFORMATION

| $T_A$ | PACKAGE(1) | | ORDERABLE PART NUMBER | TOP-SIDE MARKING(2) |
|---|---|---|---|---|
| –40°C to 85°C | NanoFree™ – WCSP (DSBGA) 0.23-mm Large Bump – YZP (Pb-free) | Reel of 3000 | SN74AUC2G08YZPR | _ _ _UE_ |
| | SSOP – DCT | Reel of 3000 | SN74AUC2G08DCTR | U08_ _ _ |
| | VSSOP – DCU | Reel of 3000 | SN74AUC2G08DCUR | U08_ |

(1) Package drawings, standard packing quantities, thermal data, symbolization, and PCB design guidelines are available at www.ti.com/sc/package.
(2) DCT: The actual top-side marking has three additional characters that designate the year, month, and assembly/test site.
DCU: The actual top-side marking has one additional character that designates the assembly/test site.
YZP: The actual top-side marking has three preceding characters to denote year, month, and sequence code, and one following character to designate the assembly/test site. Pin 1 identifier indicates solder-bump composition (1 = SnPb, • = Pb-free).

Please be aware that an important notice concerning availability, standard warranty, and use in critical applications of Texas Instruments semiconductor products and disclaimers thereto appears at the end of this data sheet.

NanoFree is a trademark of Texas Instruments.

PRODUCTION DATA information is current as of publication date. Products conform to specifications per the terms of the Texas Instruments standard warranty. Production processing does not necessarily include testing of all parameters.

Copyright © 2003–2007, Texas Instruments Incorporated

### FUNCTION TABLE
### (each gate)

| INPUTS | | OUTPUT |
|---|---|---|
| CLK | D | Y |
| H | H | H |
| L | X | L |
| X | L | L |

### LOGIC DIAGRAM (POSITIVE LOGIC)

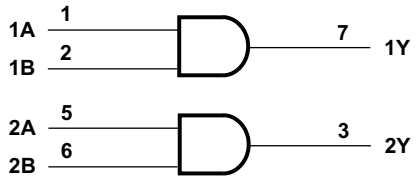


## Absolute Maximum Ratings[(1)]

over operating free-air temperature range (unless otherwise noted)

| | | | MIN | MAX | UNIT |
|---|---|---|---|---|---|
| $V_{CC}$ | Supply voltage range | | –0.5 | 3.6 | V |
| $V_I$ | Input voltage range[(2)] | | –0.5 | 3.6 | V |
| $V_O$ | Voltage range applied to any output in the high-impedance or power-off state[(2)] | | –0.5 | 3.6 | V |
| $V_O$ | Output voltage range[(2)] | | –0.5 | $V_{CC}$ + 0.5 | V |
| $I_{IK}$ | Input clamp current | $V_I < 0$ | | –50 | mA |
| $I_{OK}$ | Output clamp current | $V_O < 0$ | | –50 | mA |
| $I_O$ | Continuous output current | | | ±20 | mA |
| | Continuous current through $V_{CC}$ or GND | | | ±100 | mA |
| $\theta_{JA}$ | Package thermal impedance[(3)] | DCT package | | 220 | °C/W |
| | | DCU package | | 227 | |
| | | YZP package | | 102 | |
| $T_{stg}$ | Storage temperature range | | –65 | 150 | °C |

(1) Stresses beyond those listed under "absolute maximum ratings" may cause permanent damage to the device. These are stress ratings only, and functional operation of the device at these or any other conditions beyond those indicated under "recommended operating conditions" is not implied. Exposure to absolute-maximum-rated conditions for extended periods may affect device reliability.
(2) The input negative-voltage and output voltage ratings may be exceeded if the input and output current ratings are observed.
(3) The package thermal impedance is calculated in accordance with JESD 51-7.

## Recommended Operating Conditions[(1)]

| | | | MIN | MAX | UNIT |
|---|---|---|---|---|---|
| $V_{CC}$ | Supply voltage | | 0.8 | 2.7 | V |
| $V_{IH}$ | High-level input voltage | $V_{CC}$ = 0.8 V | $V_{CC}$ | | V |
| | | $V_{CC}$ = 1.1 V to 1.95 V | $0.65 \times V_{CC}$ | | |
| | | $V_{CC}$ = 2.3 V to 2.7 V | 1.7 | | |
| $V_{IL}$ | Low-level input voltage | $V_{CC}$ = 0.8 V | | 0 | V |
| | | $V_{CC}$ = 1.1 V to 1.95 V | | $0.35 \times V_{CC}$ | |
| | | $V_{CC}$ = 2.3 V to 2.7 V | | 0.7 | |
| $V_I$ | Input voltage | | 0 | 3.6 | V |
| $V_O$ | Output voltage | | 0 | $V_{CC}$ | V |
| $I_{OH}$ | High-level output current | $V_{CC}$ = 0.8 V | | –0.7 | mA |
| | | $V_{CC}$ = 1.1 V | | –3 | |
| | | $V_{CC}$ = 1.4 V | | –5 | |
| | | $V_{CC}$ = 1.65 V | | –8 | |
| | | $V_{CC}$ = 2.3 V | | –9 | |
| $I_{OL}$ | Low-level output current | $V_{CC}$ = 0.8 V | | 0.7 | mA |
| | | $V_{CC}$ = 1.1 V | | 3 | |
| | | $V_{CC}$ = 1.4 V | | 5 | |
| | | $V_{CC}$ = 1.65 V | | 8 | |
| | | $V_{CC}$ = 2.3 V | | 9 | |
| $\Delta t/\Delta v$ | Input transition rise or fall rate | | | 20 | ns/V |
| $T_A$ | Operating free-air temperature | | –40 | 85 | °C |

(1) All unused inputs of the device must be held at $V_{CC}$ or GND to ensure proper device operation. Refer to the TI application report, *Implications of Slow or Floating CMOS Inputs*, literature number SCBA004.

## Electrical Characteristics

over recommended operating free-air temperature range (unless otherwise noted)

| PARAMETER | | TEST CONDITIONS | $V_{CC}$ | MIN | TYP(1) | MAX | UNIT |
|---|---|---|---|---|---|---|---|
| $V_{OH}$ | | $I_{OH}$ = –100 µA | 0.8 V to 2.7 V | $V_{CC}$ – 0.1 | | | V |
| | | $I_{OH}$ = –0.7 mA | 0.8 V | | 0.55 | | |
| | | $I_{OH}$ = –3 mA | 1.1 V | 0.8 | | | |
| | | $I_{OH}$ = –5 mA | 1.4 V | 1 | | | |
| | | $I_{OH}$ = –8 mA | 1.65 V | 1.2 | | | |
| | | $I_{OH}$ = –9 mA | 2.3 V | 1.8 | | | |
| $V_{OL}$ | | $I_{OL}$ = 100 µA | 0.8 V to 2.7 V | | | 0.2 | V |
| | | $I_{OL}$ = 0.7 mA | 0.8 V | | 0.25 | | |
| | | $I_{OL}$ = 3 mA | 1.1 V | | | 0.3 | |
| | | $I_{OL}$ = 5 mA | 1.4 V | | | 0.4 | |
| | | $I_{OL}$ = 8 mA | 1.65 V | | | 0.45 | |
| | | $I_{OL}$ = 9 mA | 2.3 V | | | 0.6 | |
| $I_I$ | A or B inputs | $V_I$ = $V_{CC}$ or GND | 0 to 2.7 V | | | ±5 | µA |
| $I_{off}$ | | $V_I$ or $V_O$ = 2.7 V | 0 | | | ±10 | µA |
| $I_{CC}$ | | $V_I$ = $V_{CC}$ or GND, $I_O$ = 0 | 0.8 V to 2.7 V | | | 10 | µA |
| $C_i$ | | $V_I$ = $V_{CC}$ or GND | 2.5 V | | 2 | | pF |

(1) All typical values are at $T_A$ = 25°C.

## Switching Characteristics

over recommended operating free-air temperature range, $C_L$ = 15 pF (unless otherwise noted) (see Figure 1)

| PARAMETER | FROM (INPUT) | TO (OUTPUT) | $V_{CC}$ = 0.8 V | $V_{CC}$ = 1.2 V ± 0.1 V | | $V_{CC}$ = 1.5 V ± 0.1 V | | $V_{CC}$ = 1.8 V ± 0.15 V | | | $V_{CC}$ = 2.5 V ± 0.2 V | | UNIT |
|---|---|---|---|---|---|---|---|---|---|---|---|---|---|
| | | | TYP | MIN | MAX | MIN | MAX | MIN | TYP | MAX | MIN | MAX | |
| $t_{pd}$ | A or B | Y | 9.2 | 0.7 | 3 | 0.8 | 1.9 | 0.6 | 1 | 1.5 | 0.5 | 1 | ns |

## Switching Characteristics

over recommended operating free-air temperature range, $C_L$ = 30 pF (unless otherwise noted) (see Figure 1)

| PARAMETER | FROM (INPUT) | TO (OUTPUT) | $V_{CC}$ = 1.8 V ± 0.15 V | | | $V_{CC}$ = 2.5 V ± 0.2 V | | UNIT |
|---|---|---|---|---|---|---|---|---|
| | | | MIN | TYP | MAX | MIN | MAX | |
| $t_{pd}$ | A or B | Y | 1.2 | 1.5 | 2.1 | 1 | 1.6 | ns |

## Operating Characteristics

$T_A$ = 25°C

| PARAMETER | | TEST CONDITIONS | $V_{CC}$ = 0.8 V | $V_{CC}$ = 1.2 V | $V_{CC}$ = 1.5 V | $V_{CC}$ = 1.8 V | $V_{CC}$ = 2.5 V | UNIT |
|---|---|---|---|---|---|---|---|---|
| | | | TYP | TYP | TYP | TYP | TYP | |
| $C_{pd}$ | Power dissipation capacitance | f = 10 MHz | 12 | 13 | 13 | 13 | 15 | pF |

## PARAMETER MEASUREMENT INFORMATION

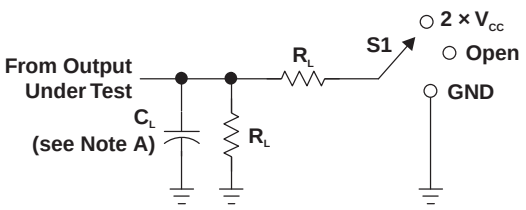


LOAD CIRCUIT

| TEST | S1 |
|---|---|
| $t_{PLH}/t_{PHL}$ | Open |
| $t_{PLZ}/t_{PZL}$ | 2 × $V_{CC}$ |
| $t_{PHZ}/t_{PZH}$ | GND |

| $V_{CC}$ | $C_L$ | $R_L$ | $V_\Delta$ |
|---|---|---|---|
| 0.8 V | 15 pF | 2 kΩ | 0.1 V |
| 1.2 V ± 0.1 V | 15 pF | 2 kΩ | 0.1 V |
| 1.5 V ± 0.1 V | 15 pF | 2 kΩ | 0.1 V |
| 1.8 V ± 0.15 V | 15 pF | 2 kΩ | 0.15 V |
| 2.5 V ± 0.2 V | 15 pF | 2 kΩ | 0.15 V |
| 1.8 V ± 0.15 V | 30 pF | 1 kΩ | 0.15 V |
| 2.5 V ± 0.2 V | 30 pF | 500 Ω | 0.15 V |

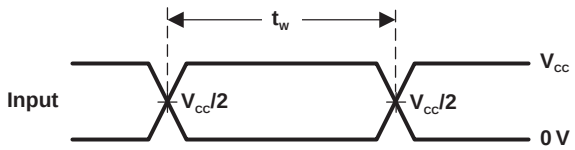


VOLTAGE WAVEFORMS
PULSE DURATION

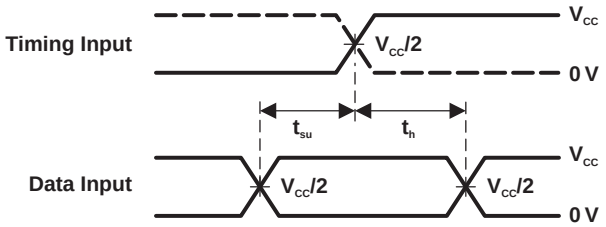


VOLTAGE WAVEFORMS
SETUP AND HOLD TIMES

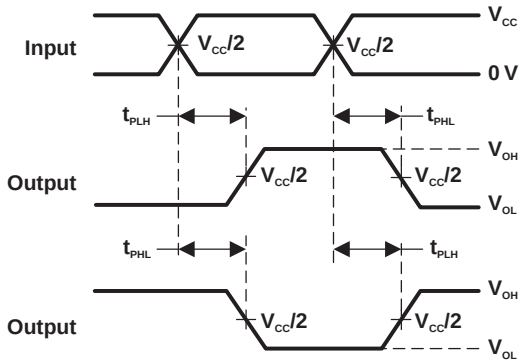


VOLTAGE WAVEFORMS
PROPAGATION DELAY TIMES
INVERTING AND NONINVERTING OUTPUTS

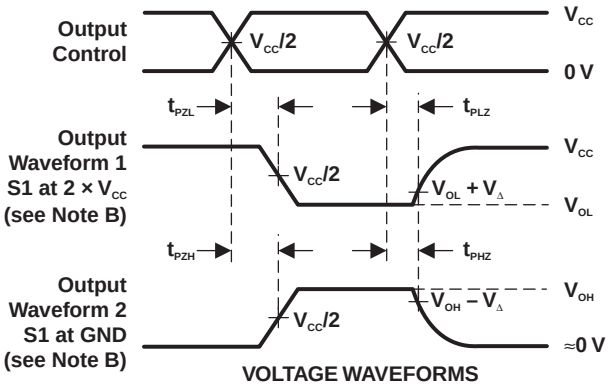


VOLTAGE WAVEFORMS
ENABLE AND DISABLE TIMES
LOW- AND HIGH-LEVEL ENABLING

NOTES:
A. $C_L$ includes probe and jig capacitance.
B. Waveform 1 is for an output with internal conditions such that the output is low, except when disabled by the output control. Waveform 2 is for an output with internal conditions such that the output is high, except when disabled by the output control.
C. All input pulses are supplied by generators have the following characteristics: PRR ≤ 10 MHz, $Z_O$ = 50 Ω, slew rate ≥ 1 V/ns.
D. The outputs are measured one at a time, with one transition per measurement.
E. $t_{PLZ}$ and $t_{PHZ}$ are the same as $t_{dis}$.
F. $t_{PZL}$ and $t_{PZH}$ are the same as $t_{en}$.
G. $t_{PLH}$ and $t_{PHL}$ are the same as $t_{pd}$.
H. All parameters and waveforms are not applicable to all devices.

**Figure 1. Load Circuit and Voltage Waveforms**

## PACKAGING INFORMATION

| Orderable Device | Status (1) | Package Type | Package Drawing | Pins | Package Qty | Eco Plan (2) | Lead finish/ Ball material (6) | MSL Peak Temp (3) | Op Temp (°C) | Device Marking (4/5) | Samples |
|---|---|---|---|---|---|---|---|---|---|---|---|
| SN74AUC2G08DCTR | ACTIVE | SM8 | DCT | 8 | 3000 | RoHS & Green | NIPDAU | Level-1-260C-UNLIM | -40 to 85 | U08 (R, Z) | Samples |
| SN74AUC2G08DCTRG4 | ACTIVE | SM8 | DCT | 8 | 3000 | RoHS & Green | NIPDAU | Level-1-260C-UNLIM | -40 to 85 | U08 (R, Z) | Samples |
| SN74AUC2G08DCUR | ACTIVE | VSSOP | DCU | 8 | 3000 | RoHS & Green | NIPDAU \| SN | Level-1-260C-UNLIM | -40 to 85 | (U08Q, U08R) | Samples |
| SN74AUC2G08DCURG4 | ACTIVE | VSSOP | DCU | 8 | 3000 | RoHS & Green | NIPDAU | Level-1-260C-UNLIM | -40 to 85 | U08R | Samples |
| SN74AUC2G08YZPR | ACTIVE | DSBGA | YZP | 8 | 3000 | RoHS & Green | SNAGCU | Level-1-260C-UNLIM | -40 to 85 | UEN | Samples |

(1) The marketing status values are defined as follows:
**ACTIVE:** Product device recommended for new designs.
**LIFEBUY:** TI has announced that the device will be discontinued, and a lifetime-buy period is in effect.
**NRND:** Not recommended for new designs. Device is in production to support existing customers, but TI does not recommend using this part in a new design.
**PREVIEW:** Device has been announced but is not in production. Samples may or may not be available.
**OBSOLETE:** TI has discontinued the production of the device.

(2) **RoHS:** TI defines "RoHS" to mean semiconductor products that are compliant with the current EU RoHS requirements for all 10 RoHS substances, including the requirement that RoHS substance do not exceed 0.1% by weight in homogeneous materials. Where designed to be soldered at high temperatures, "RoHS" products are suitable for use in specified lead-free processes. TI may reference these types of products as "Pb-Free".
**RoHS Exempt:** TI defines "RoHS Exempt" to mean products that contain lead but are compliant with EU RoHS pursuant to a specific EU RoHS exemption.
**Green:** TI defines "Green" to mean the content of Chlorine (Cl) and Bromine (Br) based flame retardants meet JS709B low halogen requirements of <=1000ppm threshold. Antimony trioxide based flame retardants must also meet the <=1000ppm threshold requirement.

(3) MSL, Peak Temp. - The Moisture Sensitivity Level rating according to the JEDEC industry standard classifications, and peak solder temperature.

(4) There may be additional marking, which relates to the logo, the lot trace code information, or the environmental category on the device.

(5) Multiple Device Markings will be inside parentheses. Only one Device Marking contained in parentheses and separated by a "~" will appear on a device. If a line is indented then it is a continuation of the previous line and the two combined represent the entire Device Marking for that device.

(6) Lead finish/Ball material - Orderable Devices may have multiple material finish options. Finish options are separated by a vertical ruled line. Lead finish/Ball material values may wrap to two lines if the finish value exceeds the maximum column width.

**Important Information and Disclaimer:**The information provided on this page represents TI's knowledge and belief as of the date that it is provided. TI bases its knowledge and belief on information provided by third parties, and makes no representation or warranty as to the accuracy of such information. Efforts are underway to better integrate information from third parties. TI has taken and continues to take reasonable steps to provide representative and accurate information but may not have conducted destructive testing or chemical analysis on incoming materials and chemicals. TI and TI suppliers consider certain information to be proprietary, and thus CAS numbers and other limited information may not be available for release.

In no event shall TI's liability arising out of such information exceed the total purchase price of the TI part(s) at issue in this document sold by TI to Customer on an annual basis.

## TAPE AND REEL INFORMATION

**REEL DIMENSIONS**

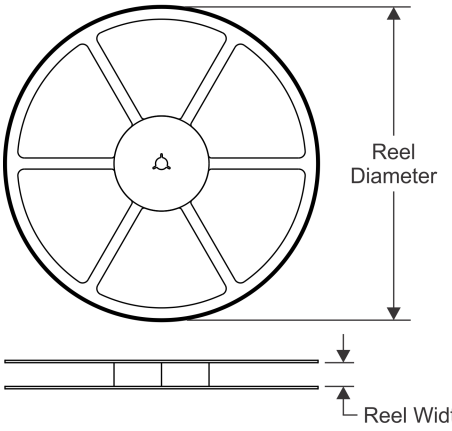


**TAPE DIMENSIONS**

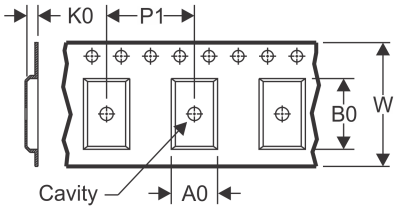


| | |
|---|---|
| A0 | Dimension designed to accommodate the component width |
| B0 | Dimension designed to accommodate the component length |
| K0 | Dimension designed to accommodate the component thickness |
| W | Overall width of the carrier tape |
| P1 | Pitch between successive cavity centers |

**QUADRANT ASSIGNMENTS FOR PIN 1 ORIENTATION IN TAPE**

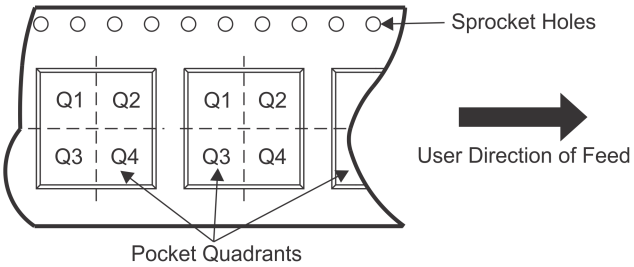


*All dimensions are nominal

| Device | Package Type | Package Drawing | Pins | SPQ | Reel Diameter (mm) | Reel Width W1 (mm) | A0 (mm) | B0 (mm) | K0 (mm) | P1 (mm) | W (mm) | Pin1 Quadrant |
|---|---|---|---|---|---|---|---|---|---|---|---|---|
| SN74AUC2G08DCTR | SM8 | DCT | 8 | 3000 | 180.0 | 13.0 | 3.35 | 4.5 | 1.55 | 4.0 | 12.0 | Q3 |
| SN74AUC2G08DCTR | SM8 | DCT | 8 | 3000 | 177.8 | 12.4 | 3.45 | 4.4 | 1.45 | 4.0 | 12.0 | Q3 |
| SN74AUC2G08DCUR | VSSOP | DCU | 8 | 3000 | 180.0 | 8.4 | 2.25 | 3.35 | 1.05 | 4.0 | 8.0 | Q3 |
| SN74AUC2G08DCUR | VSSOP | DCU | 8 | 3000 | 178.0 | 9.5 | 2.25 | 3.35 | 1.05 | 4.0 | 8.0 | Q3 |
| SN74AUC2G08DCURG4 | VSSOP | DCU | 8 | 3000 | 180.0 | 8.4 | 2.25 | 3.35 | 1.05 | 4.0 | 8.0 | Q3 |
| SN74AUC2G08YZPR | DSBGA | YZP | 8 | 3000 | 178.0 | 9.2 | 1.02 | 2.02 | 0.63 | 4.0 | 8.0 | Q1 |

TAPE AND REEL BOX DIMENSIONS

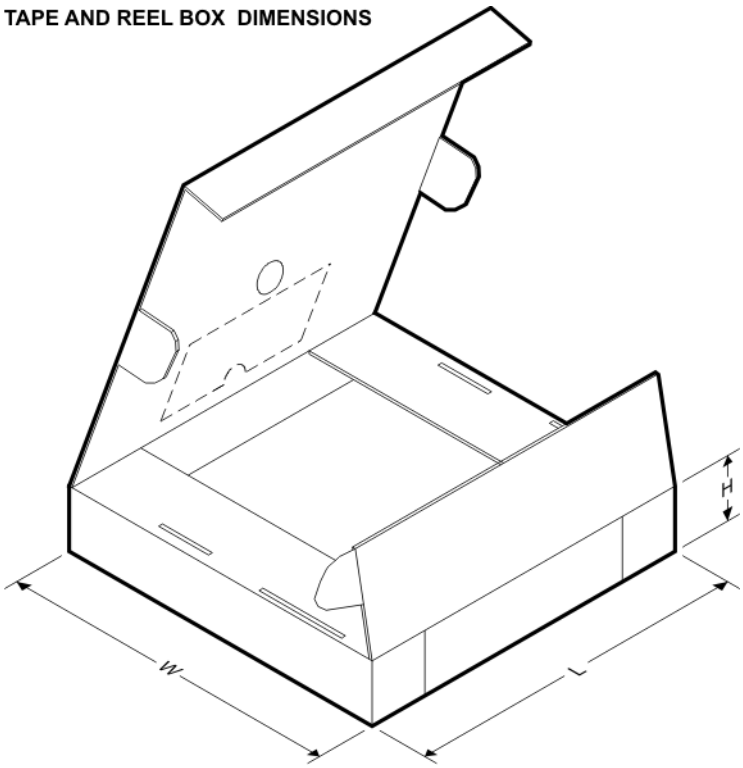


*All dimensions are nominal

| Device | Package Type | Package Drawing | Pins | SPQ | Length (mm) | Width (mm) | Height (mm) |
|---|---|---|---|---|---|---|---|
| SN74AUC2G08DCTR | SM8 | DCT | 8 | 3000 | 182.0 | 182.0 | 20.0 |
| SN74AUC2G08DCTR | SM8 | DCT | 8 | 3000 | 183.0 | 183.0 | 20.0 |
| SN74AUC2G08DCUR | VSSOP | DCU | 8 | 3000 | 202.0 | 201.0 | 28.0 |
| SN74AUC2G08DCUR | VSSOP | DCU | 8 | 3000 | 202.0 | 201.0 | 28.0 |
| SN74AUC2G08DCURG4 | VSSOP | DCU | 8 | 3000 | 202.0 | 201.0 | 28.0 |
| SN74AUC2G08YZPR | DSBGA | YZP | 8 | 3000 | 220.0 | 220.0 | 35.0 |

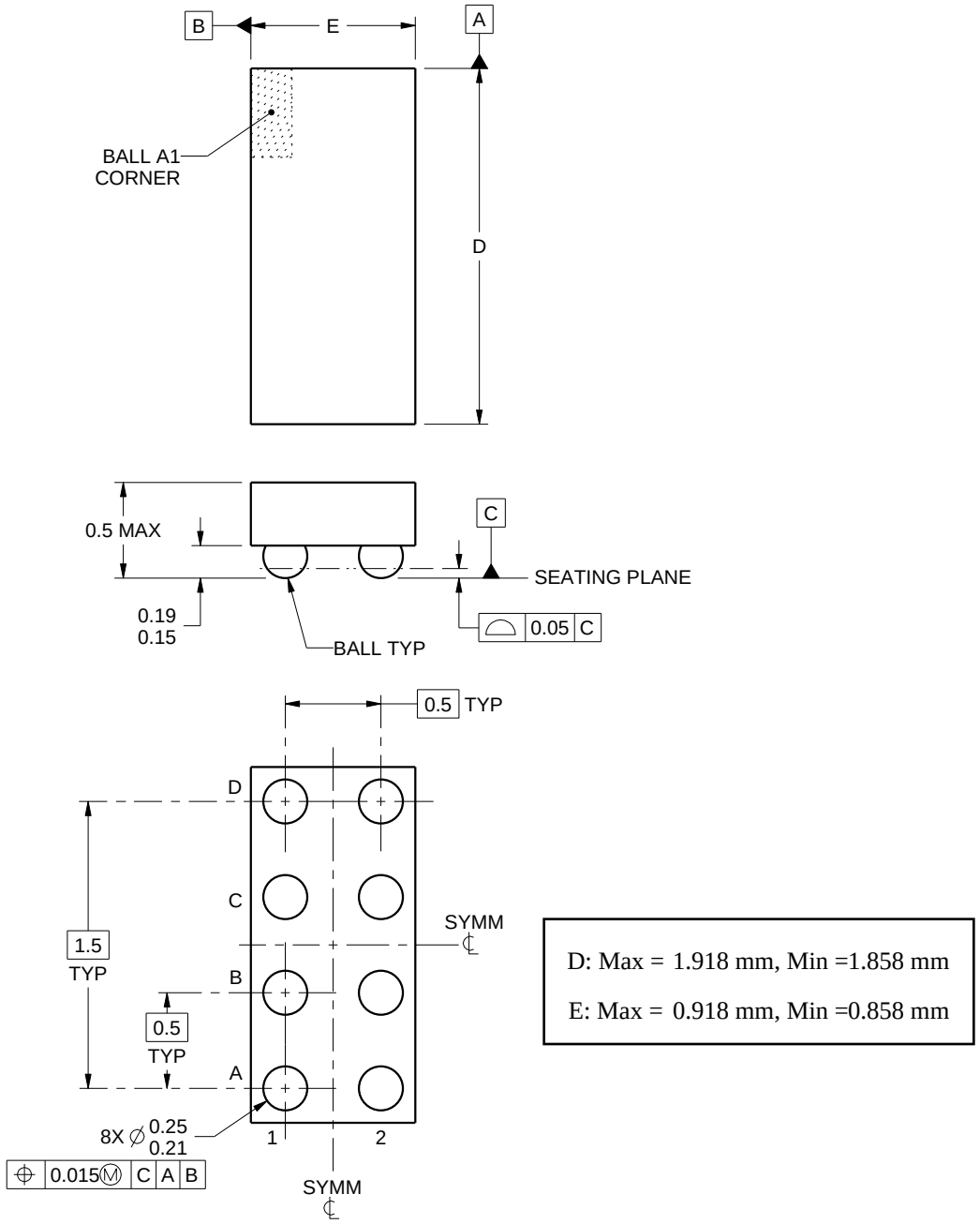


NOTES:

1. All linear dimensions are in millimeters. Any dimensions in parenthesis are for reference only. Dimensioning and tolerancing per ASME Y14.5M.
2. This drawing is subject to change without notice.

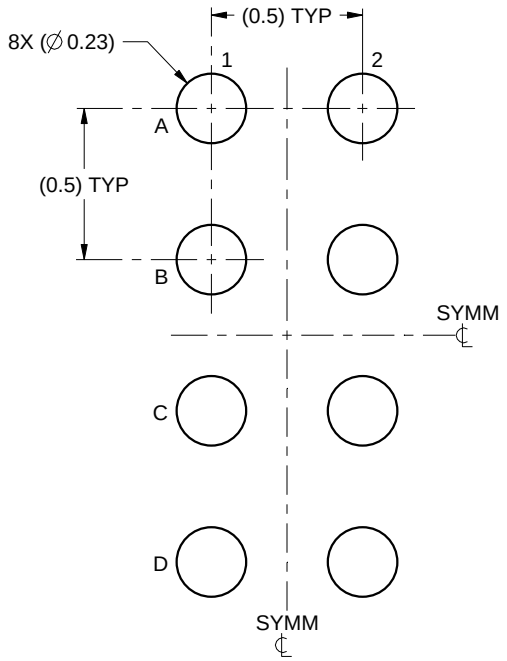


LAND PATTERN EXAMPLE
SCALE:40X

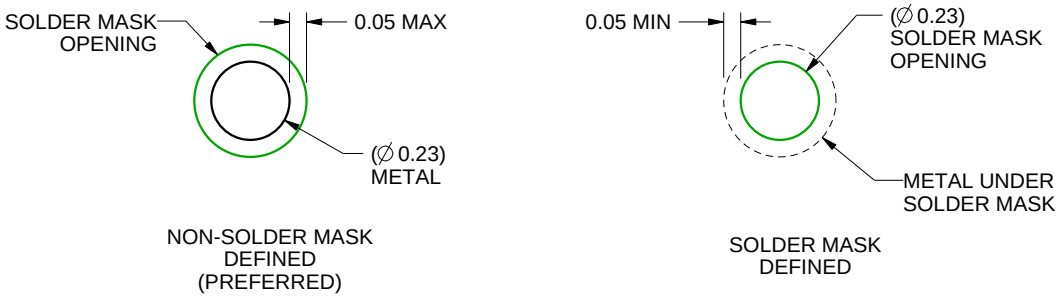


SOLDER MASK DETAILS
NOT TO SCALE

4223082/A 07/2016

NOTES: (continued)

3. Final dimensions may vary due to manufacturing tolerance considerations and also routing constraints.
   For more information, see Texas Instruments literature number SNVA009 (www.ti.com/lit/snva009).

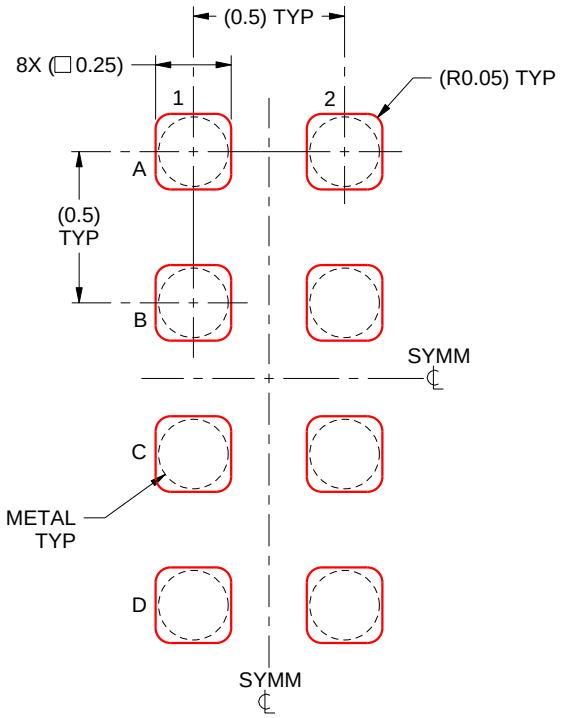


SOLDER PASTE EXAMPLE
BASED ON 0.1 mm THICK STENCIL
SCALE:40X

4223082/A 07/2016

NOTES: (continued)

4. Laser cutting apertures with trapezoidal walls and rounded corners may offer better paste release.

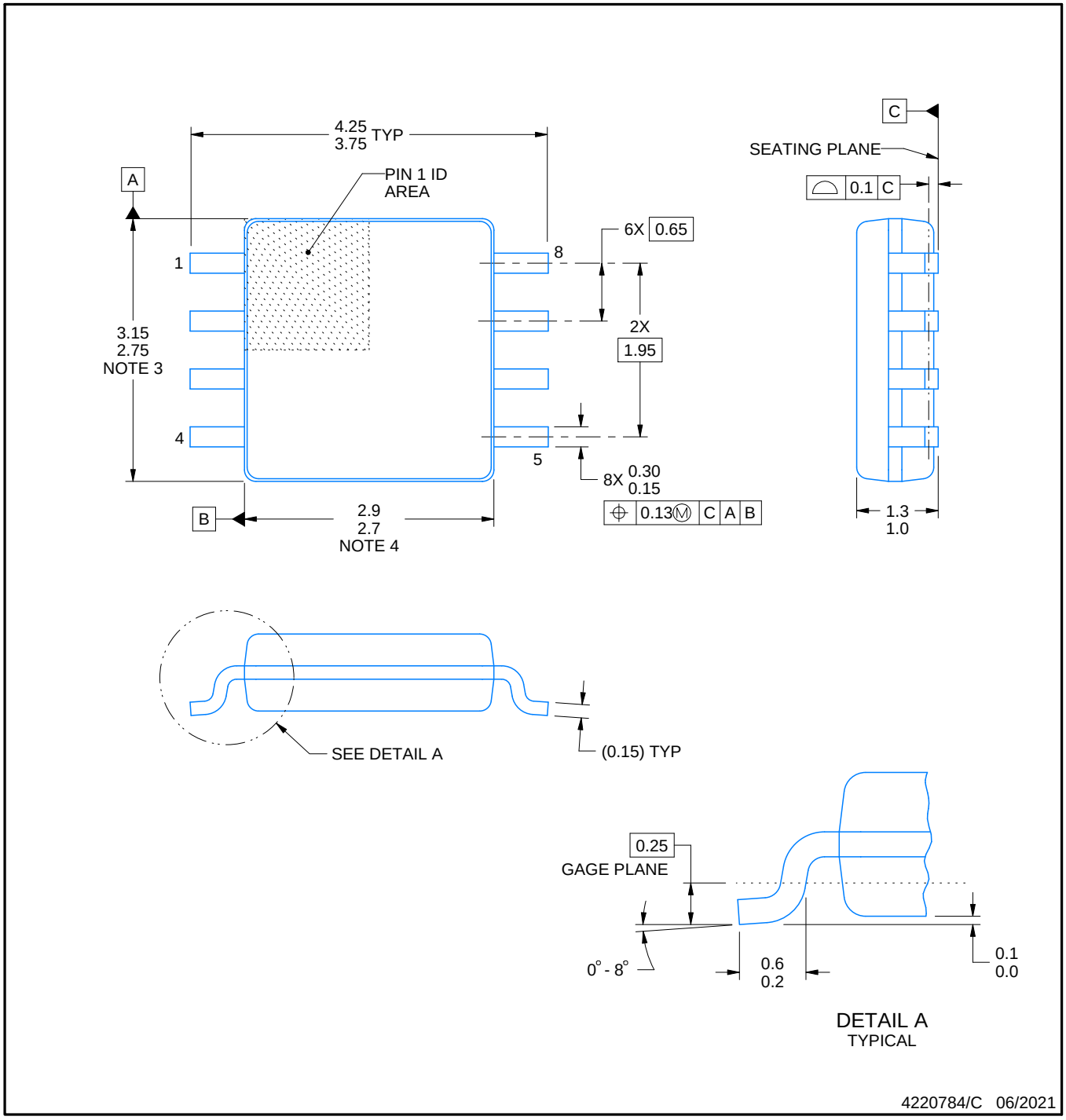


NOTES:

1. All linear dimensions are in millimeters. Dimensions in parenthesis are for reference only. Dimensioning and tolerancing per ASME Y14.5M.
2. This drawing is subject to change without notice.
3. This dimension does not include mold flash, protrusions, or gate burrs. Mold flash, protrusions, or gate burrs shall not exceed 0.15 mm per side.
4. This dimension does not include interlead flash. Interlead flash shall not exceed 0.25 mm per side.

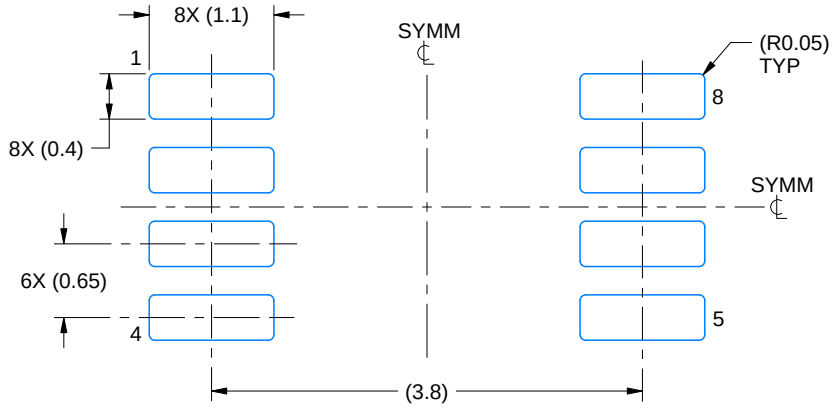


LAND PATTERN EXAMPLE
EXPOSED METAL SHOWN
SCALE:15X

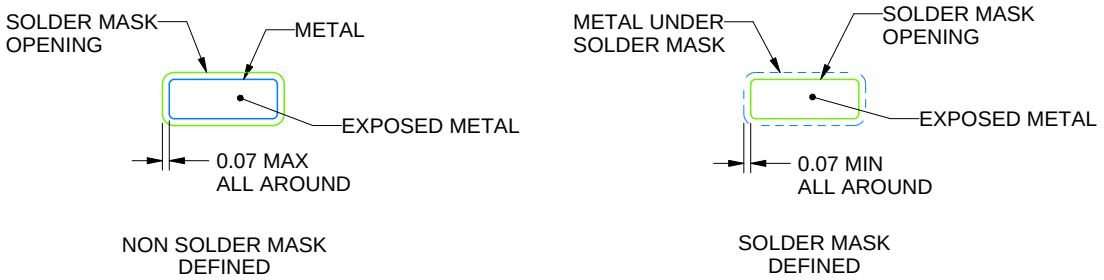


SOLDER MASK DETAILS

4220784/C 06/2021

NOTES: (continued)

5. Publication IPC-7351 may have alternate designs.
6. Solder mask tolerances between and around signal pads can vary based on board fabrication site.

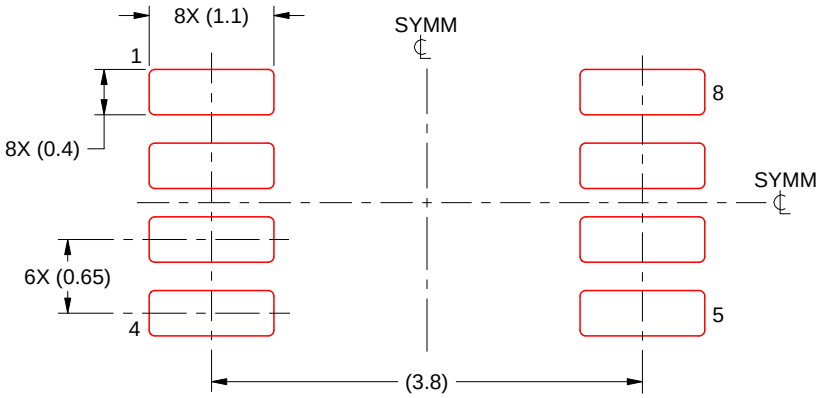


SOLDER PASTE EXAMPLE
BASED ON 0.125 mm THICK STENCIL
SCALE:15X

4220784/C 06/2021

NOTES: (continued)

7. Laser cutting apertures with trapezoidal walls and rounded corners may offer better paste release. IPC-7525 may have alternate design recommendations.
8. Board assembly site may have different recommendations for stencil design.

## DCU (R–PDSO–G8) PLASTIC SMALL–OUTLINE PACKAGE (DIE DOWN)

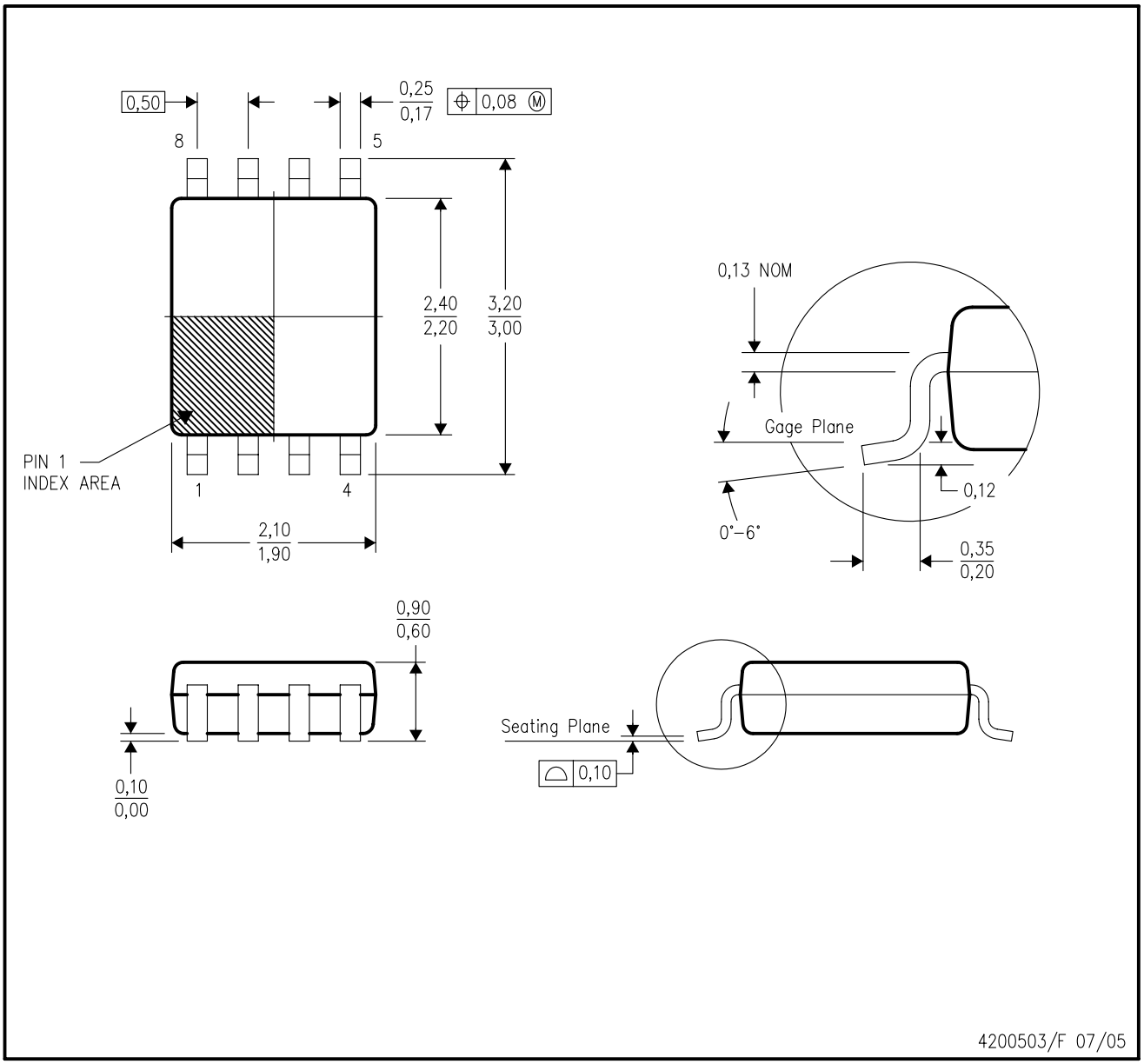


NOTES:
A. All linear dimensions are in millimeters.
B. This drawing is subject to change without notice.
C. Body dimensions do not include mold flash or protrusion. Mold flash and protrusion shall not exceed 0.15 per side.
D. Falls within JEDEC MO–187 variation CA.

DCU (S–PDSO–G8) PLASTIC SMALL OUTLINE PACKAGE (DIE DOWN)

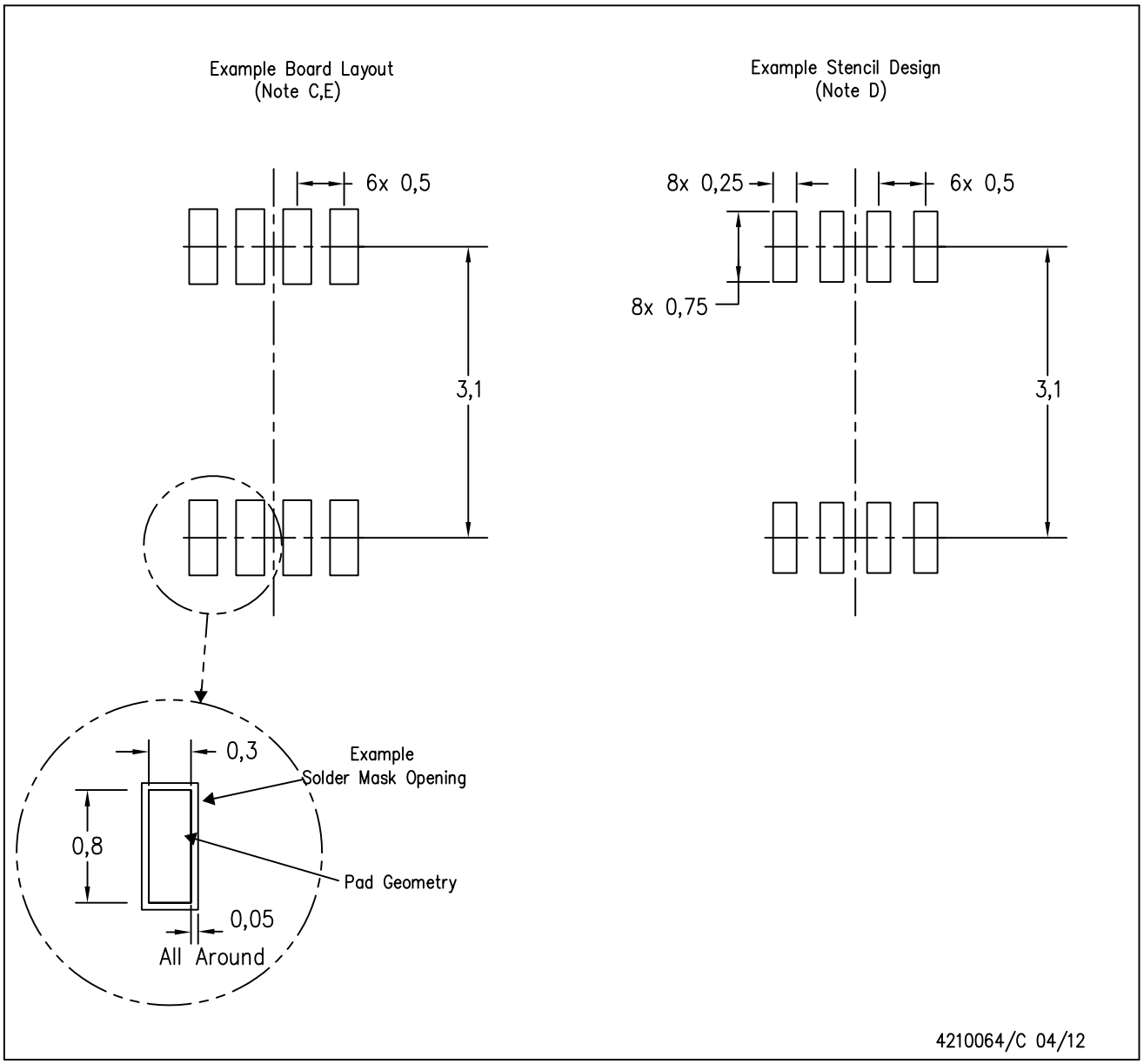


NOTES:
A. All linear dimensions are in millimeters.
B. This drawing is subject to change without notice.
C. Publication IPC–7351 is recommended for alternate designs.
D. Laser cutting apertures with trapezoidal walls and also rounding corners will offer better paste release. Customers should contact their board assembly site for stencil design recommendations. Refer to IPC–7525 for other stencil recommendations.
E. Customers should contact their board fabrication site for solder mask tolerances between and around signal pads.

# IMPORTANT NOTICE AND DISCLAIMER

TI PROVIDES TECHNICAL AND RELIABILITY DATA (INCLUDING DATA SHEETS), DESIGN RESOURCES (INCLUDING REFERENCE DESIGNS), APPLICATION OR OTHER DESIGN ADVICE, WEB TOOLS, SAFETY INFORMATION, AND OTHER RESOURCES “AS IS” AND WITH ALL FAULTS, AND DISCLAIMS ALL WARRANTIES, EXPRESS AND IMPLIED, INCLUDING WITHOUT LIMITATION ANY IMPLIED WARRANTIES OF MERCHANTABILITY, FITNESS FOR A PARTICULAR PURPOSE OR NON-INFRINGEMENT OF THIRD PARTY INTELLECTUAL PROPERTY RIGHTS.

These resources are intended for skilled developers designing with TI products. You are solely responsible for (1) selecting the appropriate TI products for your application, (2) designing, validating and testing your application, and (3) ensuring your application meets applicable standards, and any other safety, security, regulatory or other requirements.

These resources are subject to change without notice. TI grants you permission to use these resources only for development of an application that uses the TI products described in the resource. Other reproduction and display of these resources is prohibited. No license is granted to any other TI intellectual property right or to any third party intellectual property right. TI disclaims responsibility for, and you will fully indemnify TI and its representatives against, any claims, damages, costs, losses, and liabilities arising out of your use of these resources.

TI’s products are provided subject to TI’s Terms of Sale or other applicable terms available either on ti.com or provided in conjunction with such TI products. TI’s provision of these resources does not expand or otherwise alter TI’s applicable warranties or warranty disclaimers for TI products.

TI objects to and rejects any additional or different terms you may have proposed.

Mailing Address: Texas Instruments, Post Office Box 655303, Dallas, Texas 75265
Copyright © 2022, Texas Instruments Incorporated