SNx4HCT245 Octal Bus Transceivers With 3-State Outputs

1 Features

- Operating Voltage Range of 4.5 V to 5.5 V
- High-Current 3-State Outputs Drive Bus Lines Directly or up To 15-LSTTL Loads
- Low Power Consumption, 80-µA Maximum I_{CC}
- Typical t_{pd} = 14 ns
- ±6-mA Output Drive at 5 V
- Low Input Current of 1 µA Maximum
- Inputs Are TTL-Voltage Compatible

2 Applications

- Factory Automation and Control
- Grid Infrastructure
- Electronic Point of Sale
- Multi-Function Printers
- Motor Drives
- Storage
- Telecom Infrastructure

3 Description

The SNx4HCT245 octal bus transceivers are designed for asynchronous two-way communication between data buses. The control-function implementation minimizes external timing requirements.

The SNx4HCT245 devices allow data transmission from the A bus to the B bus or from the B bus to the A bus, depending upon the logic level at the direction-control (DIR) input. The output-enable ($\overline{OE}$) input can be used to disable the device so that the buses are effectively isolated.

Device Information(1)

PART NUMBER	PACKAGE	BODY SIZE (NOM)
SN54HCT245J	CDIP (20)	24.20 mm × 6.92 mm
SN54HCT245FK	LCCC (20)	8.89 mm × 8.89 mm
SN54HCT245W	CFP (20)	13.09 mm × 6.92 mm
SN74HCT245DW	SOIC (20)	12.80 mm × 7.50 mm
SN74HCT245N	PDIP (20)	24.33 mm × 6.35 mm
SN74HCT245NS	SOP (20)	12.60 mm × 5.30 mm
SN74HCT245PW	TSSOP (20)	6.50 mm × 4.40 mm
SN74HCT245DB	SSOP (20)	7.80 mm × 7.20 mm

(1) For all available packages, see the orderable addendum at the end of the data sheet.

Logic Diagram (Positive Logic)

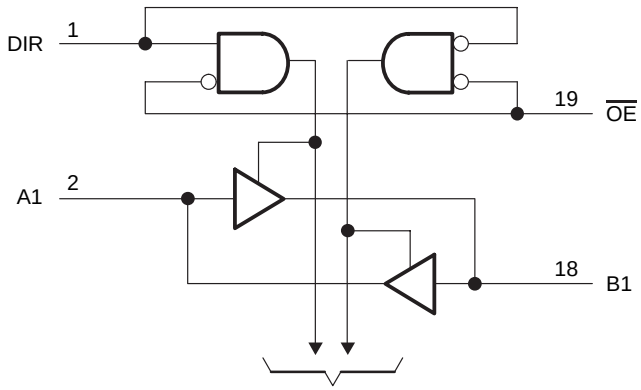

Copyright © 2016, Texas Instruments Incorporated

An IMPORTANT NOTICE at the end of this data sheet addresses availability, warranty, changes, use in safety-critical applications, intellectual property matters and other important disclaimers. PRODUCTION DATA.

Table of Contents

1 Features ... 1
2 Applications ... 1
3 Description ... 1
4 Revision History ... 2
5 Pin Configuration and Functions ... 3
6 Specifications ... 4
6.1 Absolute Maximum Ratings ... 4
6.2 ESD Ratings ... 4
6.3 Recommended Operating Conditions ... 4
6.4 Thermal Information ... 5
6.5 Electrical Characteristics ... 5
6.6 Switching Characteristics: C_L = 50 pF ... 6
6.7 Switching Characteristics: C_L = 150 pF ... 7
6.8 Operating Characteristics ... 7
6.9 Typical Characteristics ... 7
7 Parameter Measurement Information ... 8
8 Detailed Description ... 9
8.1 Overview ... 9
8.2 Functional Block Diagram ... 9
8.3 Feature Description ... 9
8.4 Device Functional Modes ... 9
9 Application and Implementation ... 10
9.1 Application Information ... 10
9.2 Typical Application ... 10
10 Power Supply Recommendations ... 12
11 Layout ... 12
11.1 Layout Guidelines ... 12
11.2 Layout Example ... 12
12 Device and Documentation Support ... 13
12.1 Documentation Support ... 13
12.2 Related Links ... 13
12.3 Receiving Notification of Documentation Updates 13
12.4 Community Resource ... 13
12.5 Trademarks ... 13
12.6 Electrostatic Discharge Caution ... 13
12.7 Glossary ... 13
13 Mechanical, Packaging, and Orderable Information ... 13

4 Revision History

NOTE: Page numbers for previous revisions may differ from page numbers in the current version.

Changes from Revision E (August 2003) to Revision F	Page
• Deleted Ordering Information, see POA at the end of the datasheet.	1
• Added *ESD Ratings* table, *Feature Description* section, *Device Functional Modes*, *Application and Implementation* section, *Power Supply Recommendations* section, *Layout* section, *Device and Documentation Support* section, and *Mechanical, Packaging, and Orderable Information* section	1
• Updated values in the *Thermal Information* table.	5

Copyright © 1984–2016, Texas Instruments Incorporated

5 Pin Configuration and Functions

SN54HCT245 . . . J OR W PACKAGE
SN74HCT245 . . . DB, DW, N, NS, OR PW PACKAGE
(TOP VIEW)

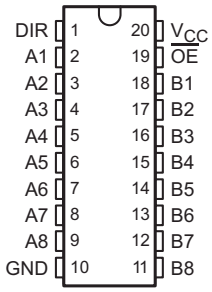

SN54HCT245 . . . FK PACKAGE
(TOP VIEW)

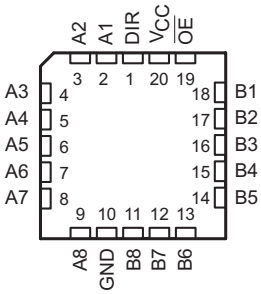

Pin Functions

PIN		I/O	DESCRIPTION
NO.	NAME		
1	DIR	I	Direction select. High = A to B, Low = B to A
2	A1	I/O	Channel 1 port A
3	A2	I/O	Channel 2 port A
4	A3	I/O	Channel 3 port A
5	A4	I/O	Channel 4 port A
6	A5	I/O	Channel 5 port A
7	A6	I/O	Channel 6 port A
8	A7	I/O	Channel 7 port A
9	A8	I/O	Channel 8 port A
10	GND	—	Ground
11	B8	O/I	Channel 1 port B
12	B7	O/I	Channel 2 port B
13	B6	O/I	Channel 3 port B
14	B5	O/I	Channel 4 port B
15	B4	O/I	Channel 5 port B
16	B3	O/I	Channel 6 port B
17	B2	O/I	Channel 7 port B
18	B1	O/I	Channel 8 port B
19	$\overline{OE}$	I	Output enable, active low. High = all ports in high impedance mode, Low = all ports active
20	V_{CC}	—	Power supply

Copyright © 1984–2016, Texas Instruments Incorporated

6 Specifications

6.1 Absolute Maximum Ratings

over operating free-air temperature range (unless otherwise noted)[1]

			MIN	MAX	UNIT
V_{CC}	Supply voltage		–0.5	7	V
I_{IK}	Input clamp current[2]	$V_I < 0$ or $V_I > V_{CC}$		±20	mA
I_{OK}	Output clamp current[2]	$V_O < 0$ or $V_O > V_{CC}$		±20	mA
I_O	Continuous output current	$V_O = 0$ to V_{CC}		±35	mA
	Continuous current through V_{CC} or GND			±70	mA
T_J	Operating virtual junction temperature			150	°C
T_{stg}	Storage temperature		–65	150	°C

(1) Stresses beyond those listed under *Absolute Maximum Ratings* may cause permanent damage to the device. These are stress ratings only, which do not imply functional operation of the device at these or any other conditions beyond those indicated under *Recommended Operating Conditions*. Exposure to absolute-maximum-rated conditions for extended periods may affect device reliability.
(2) The input and output voltage ratings may be exceeded if the input and output current ratings are observed.

6.2 ESD Ratings

			VALUE	UNIT
$V_{(ESD)}$	Electrostatic discharge	Human-body model (HBM), per ANSI/ESDA/JEDEC JS-001[1]	±1500	V
		Charged-device model (CDM), per JEDEC specification JESD22-C101[2]	±2000	

(1) JEDEC document JEP155 states that 500-V HBM allows safe manufacturing with a standard ESD control process.
(2) JEDEC document JEP157 states that 250-V CDM allows safe manufacturing with a standard ESD control process.

6.3 Recommended Operating Conditions

over operating free-air temperature range (unless otherwise noted)[1]

			MIN	NOM	MAX	UNIT
V_{CC}	Supply voltage		4.5	5	5.5	V
V_{IH}	High-level input voltage	V_{CC} = 4.5 V to 5.5 V	2			V
V_{IL}	Low-level input voltage	V_{CC} = 4.5 V to 5.5 V			0.8	V
V_I	Input voltage		0		V_{CC}	V
V_O	Output voltage		0		V_{CC}	V
$\Delta t/\Delta v$	Input transition rise and fall time				500	ns
T_A	Operating free-air temperature	SN54HCT245	–55		125	°C
		SN74HCT245	–40		85	

(1) All unused inputs of the device must be held at V_{CC} or GND to ensure proper device operation. See the TI application report, *Implications of Slow or Floating CMOS Inputs* (SCBA004).

Copyright © 1984–2016, Texas Instruments Incorporated

6.4 Thermal Information

THERMAL METRIC[1]		SNx4HCT245								UNIT
		J (CDIP)	W (CFP)	FK (LCCC)	DB (SSOP)	DW (SOIC)	N (PDIP)	NS (SO)	PW (TSSOP)	
		20 PINS	20 PINS	20 PINS	20 PINS	20 PINS	20 PINS	20 PINS	20 PINS	
$R_{\theta JA}$	Junction-to-ambient thermal resistance	—	—	—	84.6	70.4	43.4	68.9	94.9	°C/W
$R_{\theta JC(top)}$	Junction-to-case (top) thermal resistance	38.7	60.8	37.1	44.3	36.5	29.5	34.7	30.2	°C/W
$R_{\theta JB}$	Junction-to-board thermal resistance	49.8	100.4	36.1	40.2	38.1	24.3	36.4	45.7	°C/W
ψ_{JT}	Junction-to-top characterization parameter	—	—	—	11.1	11.3	15	11.6	1.5	°C/W
ψ_{JB}	Junction-to-board characterization parameter	—	—	—	39.7	37.7	24.2	36	45.1	°C/W
$R_{\theta JC(bot)}$	Junction-to-case (bottom) thermal resistance	11.5	8.5	4.3	—	—	—	—	—	°C/W

(1) For more information about traditional and new thermal metrics, see the *Semiconductor and IC Package Thermal Metrics* application report.

6.5 Electrical Characteristics

over recommended operating free-air temperature range (unless otherwise noted)

PARAMETER		TEST CONDITIONS			V_{CC}	MIN	TYP	MAX	UNIT
V_{OH}		$V_I = V_{IH}$ or V_{IL}	$I_{OH} = -20$ µA	$T_A = 25°C$	4.5 V	4.4	4.499		V
				SN54HCT245		4.4			
				SN74HCT245		4.4			
			$I_{OH} = -6$ mA	$T_A = 25°C$		3.98	4.3		
				SN54HCT245		3.7			
				SN74HCT245		3.84			
V_{OL}		$V_I = V_{IH}$ or V_{IL}	$I_{OL} = 20$ µA	$T_A = 25°C$	4.5 V		0.001	0.1	V
				SN54HCT245				0.1	
				SN74HCT245				0.1	
			$I_{OL} = 6$ mA	$T_A = 25°C$			0.17	0.26	
				SN54HCT245				0.4	
				SN74HCT245				0.33	
I_I	DIR or $\overline{OE}$	$V_I = V_{CC}$ or 0	$T_A = 25°C$		5.5 V		±0.1	±100	nA
			SN54HCT245					±1000	
			SN74HCT245					±1000	
I_{OZ}	A or B	$V_O = V_{CC}$ or 0	$T_A = 25°C$		5.5 V		±0.01	±0.5	µA
			SN54HCT245					±10	
			SN74HCT245					±5	
I_{CC}		$V_I = V_{CC}$ or 0,	$I_O = 0$	$T_A = 25°C$	5.5 V			8	µA
				SN54HCT245				160	
				SN74HCT245				80	
ΔI_{CC}[1]		One input at 0.5 V or 2.4 V, Other inputs at 0 or VCC	$T_A = 25°C$		5.5 V		1.4	2.4	mA
			SN54HCT245					3	
			SN74HCT245					2.9	
C_i[2]	DIR or $\overline{OE}$	$T_A = 25°C$			4.5 V to 5.5 V		3	10	pF
		SN54HCT245						10	
		SN74HCT245						10	

(1) This is the increase in supply current for each input that is at one of the specified TTL voltage levels, rather than 0 V or V_{CC}.
(2) Parameter C_i does not apply to transceiver I/O ports.

6.6 Switching Characteristics: C_L = 50 pF

over recommended operating free-air temperature range, C_L = 50 pF (unless otherwise noted) (see Figure 2)

PARAMETER	FROM (INPUT)	TO (OUTPUT)	V_{CC}	TEST CONDITIONS	MIN	TYP	MAX	UNIT
t_{pd}	A or B	B or A	4.5 V	T_A = 25°C		16	22	ns
				SN54HCT245			33	
				SN74HCT245			28	
			5.5 V	T_A = 25°C		14	20	
				SN54HCT245			30	
				SN74HCT245			25	
t_{en}	$\overline{OE}$	A or B	4.5 V	T_A = 25°C		25	46	ns
				SN54HCT245			69	
				SN74HCT245			58	
			5.5 V	T_A = 25°C		22	41	
				SN54HCT245			62	
				SN74HCT245			52	
t_{dis}	$\overline{OE}$	A or B	4.5 V	T_A = 25°C		26	40	ns
				SN54HCT245			60	
				SN74HCT245			50	
			5.5 V	T_A = 25°C		23	36	
				SN54HCT245			54	
				SN74HCT245			45	
t_t		A or B	4.5 V	T_A = 25°C		9	12	ns
				SN54HCT245			18	
				SN74HCT245			15	
			5.5 V	T_A = 25°C		8	11	
				SN54HCT245			16	
				SN74HCT245			14	

Copyright © 1984–2016, Texas Instruments Incorporated

6.7 Switching Characteristics: C_L = 150 pF

over recommended operating free-air temperature range, C_L = 150 pF (unless otherwise noted) (see Figure 2)

PARAMETER	FROM (INPUT)	TO (OUTPUT)	V_{CC}	TEST CONDITIONS	MIN	TYP	MAX	UNIT
t_{pd}	A or B	B or A	4.5 V	T_A = 25°C		20	30	ns
				SN54HCT245			45	
				SN74HCT245			38	
			5.5 V	T_A = 25°C		18	27	
				SN54HCT245			41	
				SN74HCT245			34	
t_{en}	$\overline{OE}$	A or B	4.5 V	T_A = 25°C		36	59	ns
				SN54HCT245			89	
				SN74HCT245			74	
			5.5 V	T_A = 25°C		30	53	
				SN54HCT245			80	
				SN74HCT245			67	
t_t		A or B	4.5 V	T_A = 25°C		17	42	ns
				SN54HCT245			63	
				SN74HCT245			53	
			5.5 V	T_A = 25°C		14	38	
				SN54HCT245			57	
				SN74HCT245			48	

6.8 Operating Characteristics

T_A = 25°C

PARAMETER		TEST CONDITIONS	TYP	UNIT
C_{pd}	Power dissipation capacitance per transceiver	No load	40	pF

6.9 Typical Characteristics

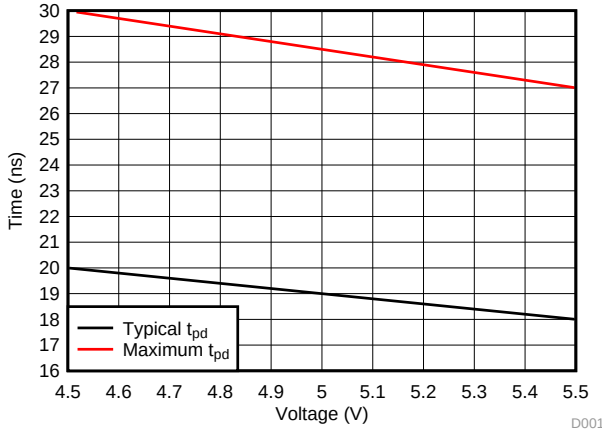

Figure 1. Propagation Delay Over Operating Voltage Range, T_A = 25°C

7 Parameter Measurement Information

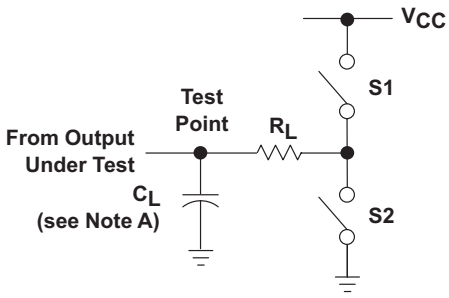

LOAD CIRCUIT

PARAMETER		R_L	C_L	S1	S2
t_{en}	t_{PZH}	1 kΩ	50 pF or 150 pF	Open	Closed
	t_{PZL}			Closed	Open
t_{dis}	t_{PHZ}	1 kΩ	50 pF	Open	Closed
	t_{PLZ}			Closed	Open
t_{pd} or t_t		—	50 pF or 150 pF	Open	Open

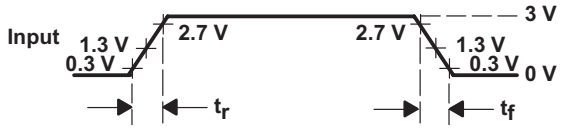

VOLTAGE WAVEFORM
INPUT RISE AND FALL TIMES

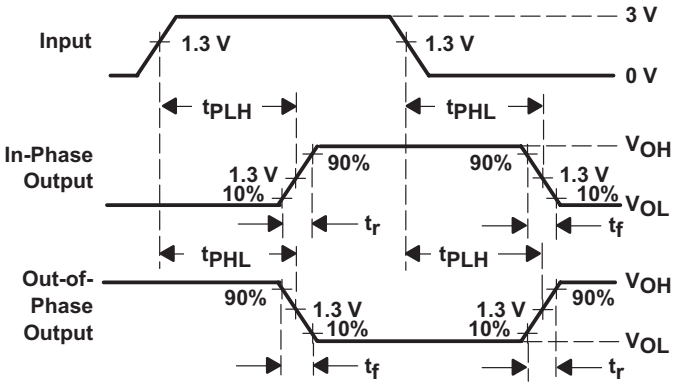

VOLTAGE WAVEFORMS
PROPAGATION DELAY AND OUTPUT RISE AND FALL TIMES

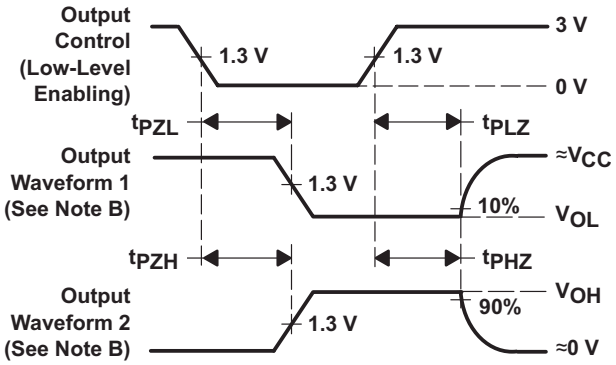

VOLTAGE WAVEFORMS
ENABLE AND DISABLE TIMES FOR 3-STATE OUTPUTS

A. C_L includes probe and test-fixture capacitance.

B. Waveform 1 is for an output with internal conditions such that the output is low except when disabled by the output control.
Waveform 2 is for an output with internal conditions such that the output is high except when disabled by the output control.

C. Phase relationships between waveforms were chosen arbitrarily. All input pulses are supplied by generators having the following characteristics: PRR ≤ 1 MHz, Z_O = 50 Ω, t_r = 6 ns, t_f = 6 ns.

D. The outputs are measured one at a time with one input transition per measurement.

E. t_{PLZ} and t_{PHZ} are the same as t_{dis}.

F. t_{PZL} and t_{PZH} are the same as t_{en}.

G. t_{PLH} and t_{PHL} are the same as t_{pd}.

Figure 2. Load Circuit and Voltage Waveforms

Copyright © 1984–2016, Texas Instruments Incorporated

8 Detailed Description

8.1 Overview

The SNx4HCT245 is a bidirectional buffer with direction control and active low output enable. This device is commonly used in logic systems for isolation and increasing drive strength.

8.2 Functional Block Diagram

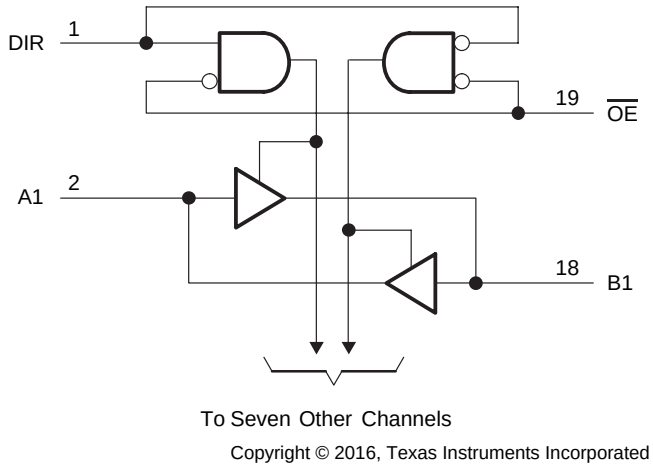

Figure 3. Logic Diagram (Positive Logic)

8.3 Feature Description

Voltage operating range from 4.5 V to 5.5 V is forgiving of 5-V power supply rail accuracy. Outputs can operate up to 15 LSTTL loads. This device has balanced propagation delay, typically 14 ns, and balanced output drive of ±6 mA at 5 V. It has low power consumption of only 80-µA maximum static supply current. The center V_{CC} and GND pin configurations minimize high-speed switching noise. Inputs are TTL-voltage compatible.

8.4 Device Functional Modes

This device is a standard '245 logic function. It has an active low output enable, a direction pin, and eight communication channels.

Table 1. Function Table

INPUTS		OPERATION
$\overline{OE}$	DIR	
L	L	B data to A bus
L	H	A data to B bus
H	X	Isolation

9 Application and Implementation

NOTE

Information in the following applications sections is not part of the TI component specification, and TI does not warrant its accuracy or completeness. TI's customers are responsible for determining suitability of components for their purposes. Customers should validate and test their design implementation to confirm system functionality.

9.1 Application Information

The SNx4HCT245 is a versatile device with many available applications. The application chosen as an example here is connecting a master and slave device through a ribbon cable. This configuration is common due to losses in this type of cable.

9.2 Typical Application

Logic transceivers are commonly seen in back plane and ribbon cable applications where a signal direct from an FPGA or MCU would be too weak to reach the distant end. The transceiver acts as an amplifier to get the signal across the line, and since it is bidirectional, data can be sent from master to slave or slave to master. The additional buffer on the direction line is necessary to ensure the direction signal can always reach the distant end.

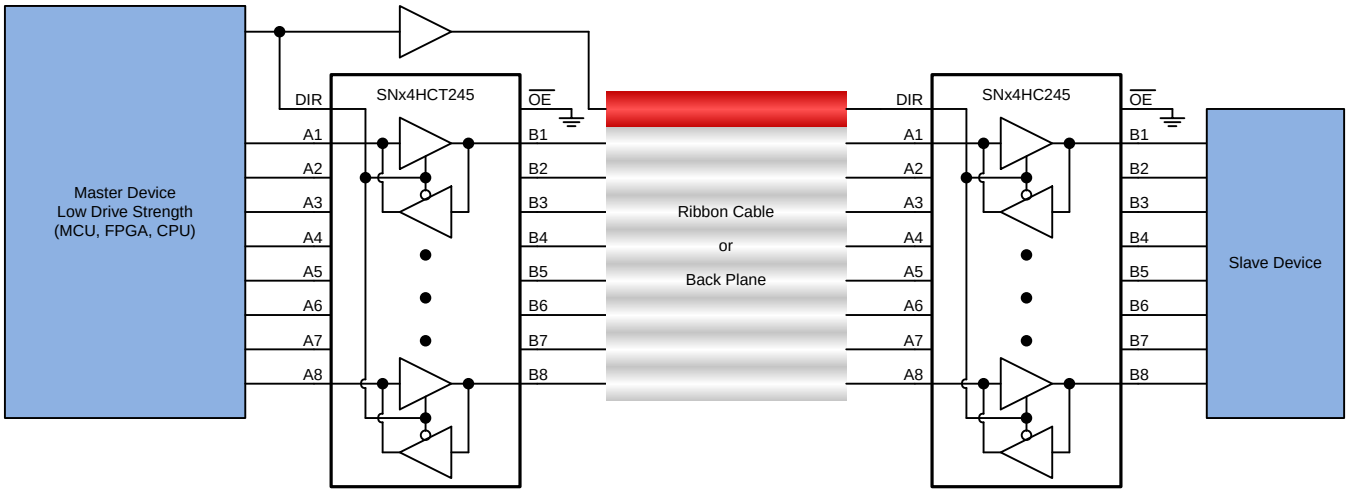

Copyright © 2016, Texas Instruments Incorporated

Figure 4. Typical application for SNx4HC245

9.2.1 Design Requirements

This device uses CMOS technology and has balanced output drive. Care must be taken to avoid bus contention because it can drive currents that would exceed maximum limits. Outputs can be combined to produce higher drive, but the high drive also creates faster edges into light loads, so routing and load conditions must be considered to prevent ringing.

9.2.2 Detailed Design Procedure

1. Recommended Input Conditions
   - Rise time and fall time specs: See (Δt/ΔV) in the *Recommended Operating Conditions*.
   - Specified high and low levels: See (VIH and VIL) in the *Recommended Operating Conditions*.
2. Recommended Output Conditions
   - Load currents should not exceed 35 mA per output and 70 mA total for the part.
   - Outputs should not be pulled above V_{CC}.

Copyright © 1984–2016, Texas Instruments Incorporated

Typical Application (continued)

9.2.3 Application Curve

It is common to see significant losses in ribbon cables and back planes. The plot shown in Figure 5 is a simplified simulation of a ribbon cable from a 5-V, 10-MHz low drive strength source. It shows the difference between an input signal from a weak driver like an MCU or FPGA compared to a strong driver like the SN74HCT245 when measured at the distant end of the cable. By adding a high-current drive transceiver before the cable, the signal strength can be significantly improved, and subsequently the cable can be longer.

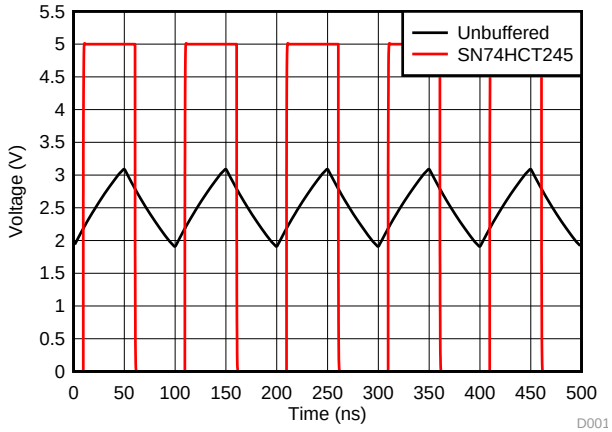

Unbuffered line is directly connected to low current source, SN74HCT245 line is buffered through the transceiver. Both signals are measured at the distant end of the ribbon cable.

Figure 5. Simulated Outputs From Ribbon Cable With a 5-V, 10-MHz Source

10 Power Supply Recommendations

The power supply can be any voltage between the MIN and MAX supply voltage rating located in the *Recommended Operating Conditions*. Each V_{CC} pin must have a good bypass capacitor to prevent power disturbance. For devices with a single supply, 0.1 µF is recommended; if there are multiple VCC pins, then 0.01 µF or 0.022 µF is recommended for each power pin. It is acceptable to parallel multiple bypass capacitors to reject different frequencies of noise. A 0.1 µF and a 1 µF are commonly used in parallel. The bypass capacitor should be installed as close to the power pin as possible for best results.

11 Layout

11.1 Layout Guidelines

When using multiple-bit logic devices, inputs should never float.

In many cases, functions or parts of functions of digital logic devices are unused, for example, when only six channels of an eight channel transceiver are used. Such input pins should not be left unconnected because the undefined voltages at the outside connections result in undefined operational states. All unused inputs of digital logic devices must be connected to a high or low bias to prevent them from floating. The logic level that should be applied to any particular unused input depends on the function of the device. Generally they are tied to GND or V_{CC}, whichever makes more sense or is more convenient.

The output enable pin disables the output section of the part when asserted. This does not disable the input section of the IOs, so they cannot float when disabled.

Figure 6 shows the proper method to terminate unused channels using a large resistance (in this example, 10-kΩ resistors). This avoids overloading the outputs , and maintains a valid voltage on the inputs. Note that it is also valid to tie both sides of an unused transceiver directly to ground or V_{CC}; however, the two sides must never be tied to different states directly.

11.2 Layout Example

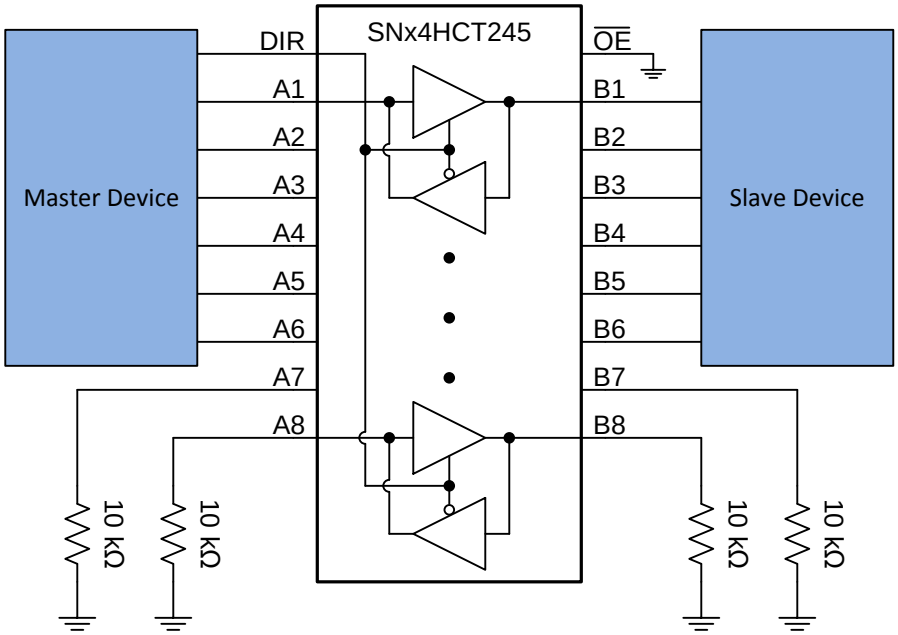

Figure 6. Proper Termination of $\overline{OE}$ Pin And Unused Channels 7 and 8

Copyright © 1984–2016, Texas Instruments Incorporated

12 Device and Documentation Support

12.1 Documentation Support

12.1.1 Related Documentation

For related documentation see the following:

Implications of Slow or Floating CMOS Inputs (SCBA004)

12.2 Related Links

The table below lists quick access links. Categories include technical documents, support and community resources, tools and software, and quick access to sample or buy.

Table 2. Related Links

PARTS	PRODUCT FOLDER	SAMPLE & BUY	TECHNICAL DOCUMENTS	TOOLS & SOFTWARE	SUPPORT & COMMUNITY
SN54HCT245	Click here	Click here	Click here	Click here	Click here
SN74HCT245	Click here	Click here	Click here	Click here	Click here

12.3 Receiving Notification of Documentation Updates

To receive notification of documentation updates, navigate to the device product folder on ti.com. In the upper right corner, click on *Alert me* to register and receive a weekly digest of any product information that has changed. For change details, review the revision history included in any revised document.

12.4 Community Resource

The following links connect to TI community resources. Linked contents are provided "AS IS" by the respective contributors. They do not constitute TI specifications and do not necessarily reflect TI's views; see TI's Terms of Use.

TI E2E™ Online Community ***TI's Engineer-to-Engineer (E2E) Community.*** Created to foster collaboration among engineers. At e2e.ti.com, you can ask questions, share knowledge, explore ideas and help solve problems with fellow engineers.

Design Support ***TI's Design Support*** Quickly find helpful E2E forums along with design support tools and contact information for technical support.

12.5 Trademarks

E2E is a trademark of Texas Instruments.
All other trademarks are the property of their respective owners.

12.6 Electrostatic Discharge Caution

These devices have limited built-in ESD protection. The leads should be shorted together or the device placed in conductive foam during storage or handling to prevent electrostatic damage to the MOS gates.

12.7 Glossary

SLYZ022 — *TI Glossary*.

This glossary lists and explains terms, acronyms, and definitions.

13 Mechanical, Packaging, and Orderable Information

The following pages include mechanical, packaging, and orderable information. This information is the most current data available for the designated devices. This data is subject to change without notice and revision of this document. For browser-based versions of this data sheet, refer to the left-hand navigation.

PACKAGING INFORMATION

Orderable Device	Status (1)	Package Type	Package Drawing	Pins	Package Qty	Eco Plan (2)	Lead finish/ Ball material (6)	MSL Peak Temp (3)	Op Temp (°C)	Device Marking (4/5)	Samples
5962-8550601VRA	ACTIVE	CDIP	J	20	20	Non-RoHS & Green	SNPB	N / A for Pkg Type	-55 to 125	5962-8550601VRA SNV54HCT245J	Samples
5962-8550601VSA	ACTIVE	CFP	W	20	25	Non-RoHS & Green	SNPB	N / A for Pkg Type	-55 to 125	5962-8550601VSA SNV54HCT245W	Samples
85506012A	ACTIVE	LCCC	FK	20	1	Non-RoHS & Green	SNPB	N / A for Pkg Type	-55 to 125	85506012A SNJ54HCT 245FK	Samples
8550601RA	ACTIVE	CDIP	J	20	1	Non-RoHS & Green	SNPB	N / A for Pkg Type	-55 to 125	8550601RA SNJ54HCT245J	Samples
JM38510/65553BRA	ACTIVE	CDIP	J	20	1	Non-RoHS & Green	SNPB	N / A for Pkg Type	-55 to 125	JM38510/ 65553BRA	Samples
JM38510/65553BSA	ACTIVE	CFP	W	20	1	Non-RoHS & Green	SNPB	N / A for Pkg Type	-55 to 125	JM38510/ 65553BSA	Samples
M38510/65553BRA	ACTIVE	CDIP	J	20	1	Non-RoHS & Green	SNPB	N / A for Pkg Type	-55 to 125	JM38510/ 65553BRA	Samples
M38510/65553BSA	ACTIVE	CFP	W	20	1	Non-RoHS & Green	SNPB	N / A for Pkg Type	-55 to 125	JM38510/ 65553BSA	Samples
SN54HCT245J	ACTIVE	CDIP	J	20	1	Non-RoHS & Green	SNPB	N / A for Pkg Type	-55 to 125	SN54HCT245J	Samples
SN74HCT245DBR	ACTIVE	SSOP	DB	20	2000	RoHS & Green	NIPDAU	Level-1-260C-UNLIM	-40 to 85	HT245	Samples
SN74HCT245DBRG4	ACTIVE	SSOP	DB	20	2000	RoHS & Green	NIPDAU	Level-1-260C-UNLIM	-40 to 85	HT245	Samples
SN74HCT245DW	ACTIVE	SOIC	DW	20	25	RoHS & Green	NIPDAU	Level-1-260C-UNLIM	-40 to 85	HCT245	Samples
SN74HCT245DWE4	ACTIVE	SOIC	DW	20	25	RoHS & Green	NIPDAU	Level-1-260C-UNLIM	-40 to 85	HCT245	Samples
SN74HCT245DWR	ACTIVE	SOIC	DW	20	2000	RoHS & Green	NIPDAU	Level-1-260C-UNLIM	-40 to 85	HCT245	Samples
SN74HCT245DWRE4	ACTIVE	SOIC	DW	20	2000	RoHS & Green	NIPDAU	Level-1-260C-UNLIM	-40 to 85	HCT245	Samples
SN74HCT245DWRG4	ACTIVE	SOIC	DW	20	2000	RoHS & Green	NIPDAU	Level-1-260C-UNLIM	-40 to 85	HCT245	Samples
SN74HCT245N	ACTIVE	PDIP	N	20	20	RoHS & Green	NIPDAU	N / A for Pkg Type	-40 to 85	SN74HCT245N	Samples

Orderable Device	Status (1)	Package Type	Package Drawing	Pins	Package Qty	Eco Plan (2)	Lead finish/ Ball material (6)	MSL Peak Temp (3)	Op Temp (°C)	Device Marking (4/5)	Samples
SN74HCT245NE4	ACTIVE	PDIP	N	20	20	RoHS & Green	NIPDAU	N / A for Pkg Type	-40 to 85	SN74HCT245N	Samples
SN74HCT245NSR	ACTIVE	SO	NS	20	2000	RoHS & Green	NIPDAU	Level-1-260C-UNLIM	-40 to 85	HCT245	Samples
SN74HCT245PW	ACTIVE	TSSOP	PW	20	70	RoHS & Green	NIPDAU	Level-1-260C-UNLIM	-40 to 85	HT245	Samples
SN74HCT245PWG4	ACTIVE	TSSOP	PW	20	70	RoHS & Green	NIPDAU	Level-1-260C-UNLIM	-40 to 85	HT245	Samples
SN74HCT245PWR	ACTIVE	TSSOP	PW	20	2000	RoHS & Green	NIPDAU | SN	Level-1-260C-UNLIM	-40 to 85	HT245	Samples
SN74HCT245PWRE4	ACTIVE	TSSOP	PW	20	2000	RoHS & Green	NIPDAU	Level-1-260C-UNLIM	-40 to 85	HT245	Samples
SN74HCT245PWRG4	ACTIVE	TSSOP	PW	20	2000	RoHS & Green	NIPDAU	Level-1-260C-UNLIM	-40 to 85	HT245	Samples
SN74HCT245PWT	ACTIVE	TSSOP	PW	20	250	RoHS & Green	NIPDAU	Level-1-260C-UNLIM	-40 to 85	HT245	Samples
SNJ54HCT245FK	ACTIVE	LCCC	FK	20	1	Non-RoHS & Green	SNPB	N / A for Pkg Type	-55 to 125	85506012A SNJ54HCT 245FK	Samples
SNJ54HCT245J	ACTIVE	CDIP	J	20	1	Non-RoHS & Green	SNPB	N / A for Pkg Type	-55 to 125	8550601RA SNJ54HCT245J	Samples
SNJ54HCT245W	ACTIVE	CFP	W	20	1	Non-RoHS & Green	SNPB	N / A for Pkg Type	-55 to 125	SNJ54HCT245W	Samples

(1) The marketing status values are defined as follows:
ACTIVE: Product device recommended for new designs.
LIFEBUY: TI has announced that the device will be discontinued, and a lifetime-buy period is in effect.
NRND: Not recommended for new designs. Device is in production to support existing customers, but TI does not recommend using this part in a new design.
PREVIEW: Device has been announced but is not in production. Samples may or may not be available.
OBSOLETE: TI has discontinued the production of the device.

(2) **RoHS:** TI defines "RoHS" to mean semiconductor products that are compliant with the current EU RoHS requirements for all 10 RoHS substances, including the requirement that RoHS substance do not exceed 0.1% by weight in homogeneous materials. Where designed to be soldered at high temperatures, "RoHS" products are suitable for use in specified lead-free processes. TI may reference these types of products as "Pb-Free".
RoHS Exempt: TI defines "RoHS Exempt" to mean products that contain lead but are compliant with EU RoHS pursuant to a specific EU RoHS exemption.
Green: TI defines "Green" to mean the content of Chlorine (Cl) and Bromine (Br) based flame retardants meet JS709B low halogen requirements of <=1000ppm threshold. Antimony trioxide based flame retardants must also meet the <=1000ppm threshold requirement.

(3) MSL, Peak Temp. - The Moisture Sensitivity Level rating according to the JEDEC industry standard classifications, and peak solder temperature.

(4) There may be additional marking, which relates to the logo, the lot trace code information, or the environmental category on the device.

(5) Multiple Device Markings will be inside parentheses. Only one Device Marking contained in parentheses and separated by a "~" will appear on a device. If a line is indented then it is a continuation of the previous line and the two combined represent the entire Device Marking for that device.

(6) Lead finish/Ball material - Orderable Devices may have multiple material finish options. Finish options are separated by a vertical ruled line. Lead finish/Ball material values may wrap to two lines if the finish value exceeds the maximum column width.

Important Information and Disclaimer: The information provided on this page represents TI's knowledge and belief as of the date that it is provided. TI bases its knowledge and belief on information provided by third parties, and makes no representation or warranty as to the accuracy of such information. Efforts are underway to better integrate information from third parties. TI has taken and continues to take reasonable steps to provide representative and accurate information but may not have conducted destructive testing or chemical analysis on incoming materials and chemicals. TI and TI suppliers consider certain information to be proprietary, and thus CAS numbers and other limited information may not be available for release.

In no event shall TI's liability arising out of such information exceed the total purchase price of the TI part(s) at issue in this document sold by TI to Customer on an annual basis.

OTHER QUALIFIED VERSIONS OF SN54HCT245, SN54HCT245-SP, SN74HCT245 :

- Catalog : SN74HCT245, SN54HCT245
- Military : SN54HCT245
- Space : SN54HCT245-SP

NOTE: Qualified Version Definitions:

- Catalog - TI's standard catalog product
- Military - QML certified for Military and Defense Applications
- Space - Radiation tolerant, ceramic packaging and qualified for use in Space-based application

TAPE AND REEL INFORMATION

REEL DIMENSIONS

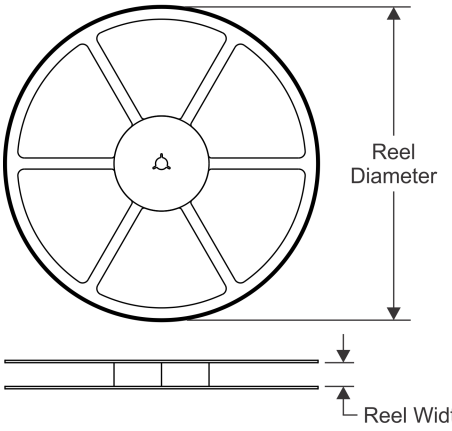

TAPE DIMENSIONS

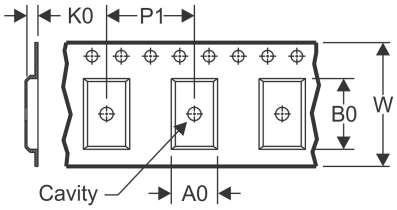

A0	Dimension designed to accommodate the component width
B0	Dimension designed to accommodate the component length
K0	Dimension designed to accommodate the component thickness
W	Overall width of the carrier tape
P1	Pitch between successive cavity centers

QUADRANT ASSIGNMENTS FOR PIN 1 ORIENTATION IN TAPE

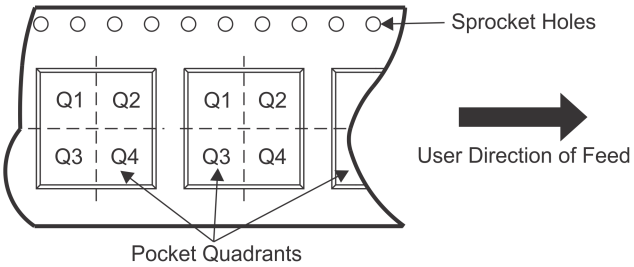

*All dimensions are nominal

Device	Package Type	Package Drawing	Pins	SPQ	Reel Diameter (mm)	Reel Width W1 (mm)	A0 (mm)	B0 (mm)	K0 (mm)	P1 (mm)	W (mm)	Pin1 Quadrant
SN74HCT245DBR	SSOP	DB	20	2000	330.0	16.4	8.2	7.5	2.5	12.0	16.0	Q1
SN74HCT245DWR	SOIC	DW	20	2000	330.0	24.4	10.9	13.3	2.7	12.0	24.0	Q1
SN74HCT245NSR	SO	NS	20	2000	330.0	24.4	8.4	13.0	2.5	12.0	24.0	Q1
SN74HCT245PWR	TSSOP	PW	20	2000	330.0	16.4	6.95	7.0	1.4	8.0	16.0	Q1
SN74HCT245PWR	TSSOP	PW	20	2000	330.0	16.4	6.95	7.1	1.6	8.0	16.0	Q1
SN74HCT245PWRG4	TSSOP	PW	20	2000	330.0	16.4	6.95	7.0	1.4	8.0	16.0	Q1
SN74HCT245PWT	TSSOP	PW	20	250	330.0	16.4	6.95	7.0	1.4	8.0	16.0	Q1

TAPE AND REEL BOX DIMENSIONS

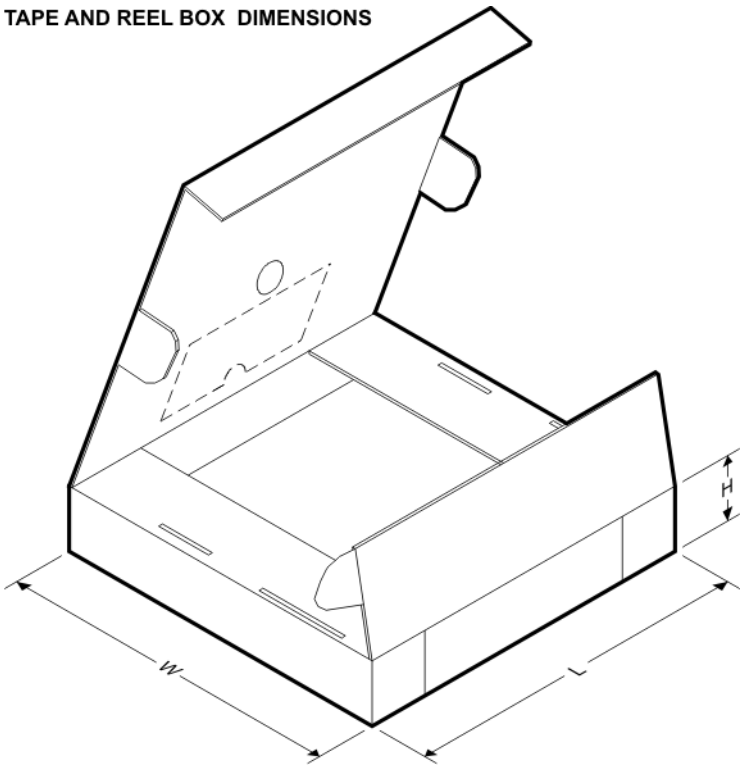

*All dimensions are nominal

Device	Package Type	Package Drawing	Pins	SPQ	Length (mm)	Width (mm)	Height (mm)
SN74HCT245DBR	SSOP	DB	20	2000	853.0	449.0	35.0
SN74HCT245DWR	SOIC	DW	20	2000	367.0	367.0	45.0
SN74HCT245NSR	SO	NS	20	2000	367.0	367.0	45.0
SN74HCT245PWR	TSSOP	PW	20	2000	853.0	449.0	35.0
SN74HCT245PWR	TSSOP	PW	20	2000	364.0	364.0	27.0
SN74HCT245PWRG4	TSSOP	PW	20	2000	853.0	449.0	35.0
SN74HCT245PWT	TSSOP	PW	20	250	853.0	449.0	35.0

TUBE

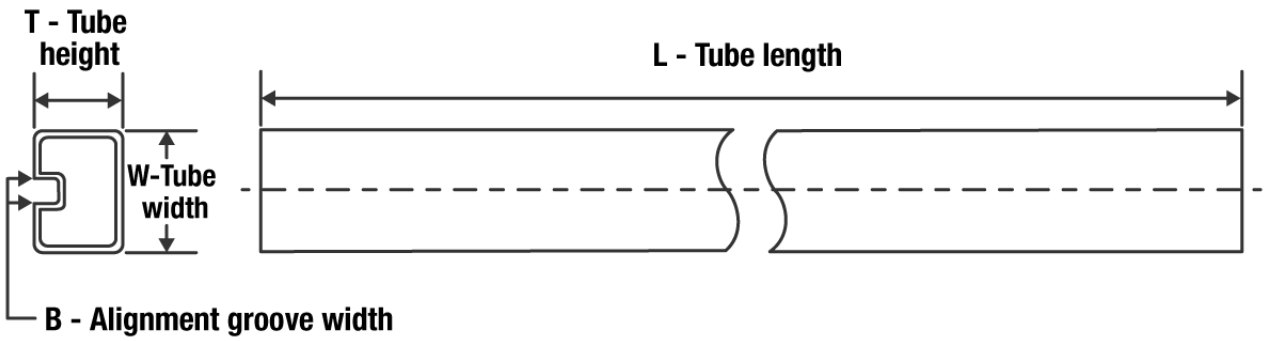

*All dimensions are nominal

Device	Package Name	Package Type	Pins	SPQ	L (mm)	W (mm)	T (µm)	B (mm)
5962-8550601VSA	W	CFP	20	25	506.98	26.16	6220	NA
85506012A	FK	LCCC	20	1	506.98	12.06	2030	NA
SN74HCT245DW	DW	SOIC	20	25	507	12.83	5080	6.6
SN74HCT245DWE4	DW	SOIC	20	25	507	12.83	5080	6.6
SN74HCT245N	N	PDIP	20	20	506	13.97	11230	4.32
SN74HCT245NE4	N	PDIP	20	20	506	13.97	11230	4.32
SN74HCT245PW	PW	TSSOP	20	70	530	10.2	3600	3.5
SN74HCT245PWG4	PW	TSSOP	20	70	530	10.2	3600	3.5
SNJ54HCT245FK	FK	LCCC	20	1	506.98	12.06	2030	NA

W (R–GDFP–F20) CERAMIC DUAL FLATPACK

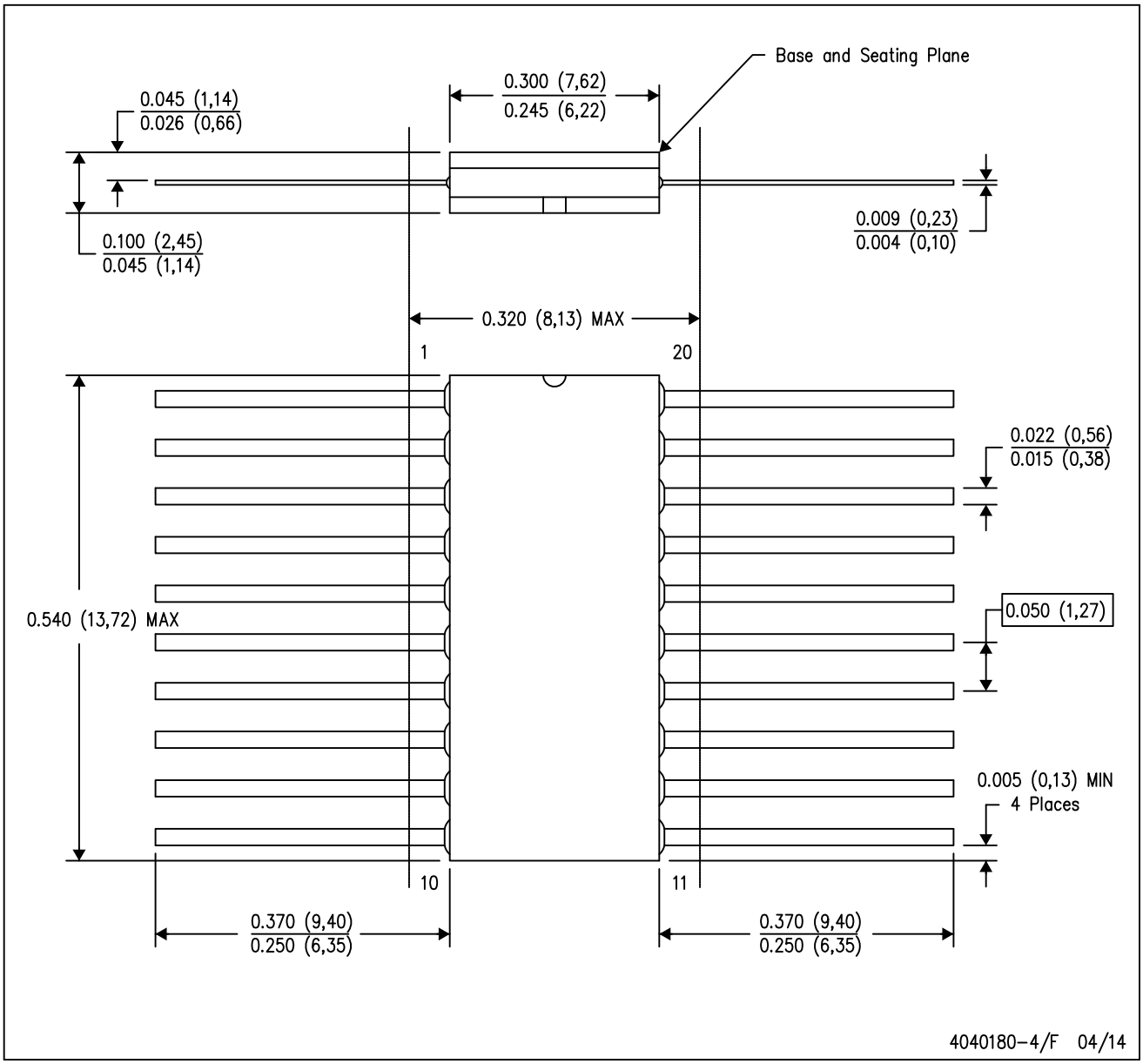

NOTES:
A. All linear dimensions are in inches (millimeters).
B. This drawing is subject to change without notice.
C. This package can be hermetically sealed with a ceramic lid using glass frit.
D. Index point is provided on cap for terminal identification only.
E. Falls within Mil–Std 1835 GDFP2–F20

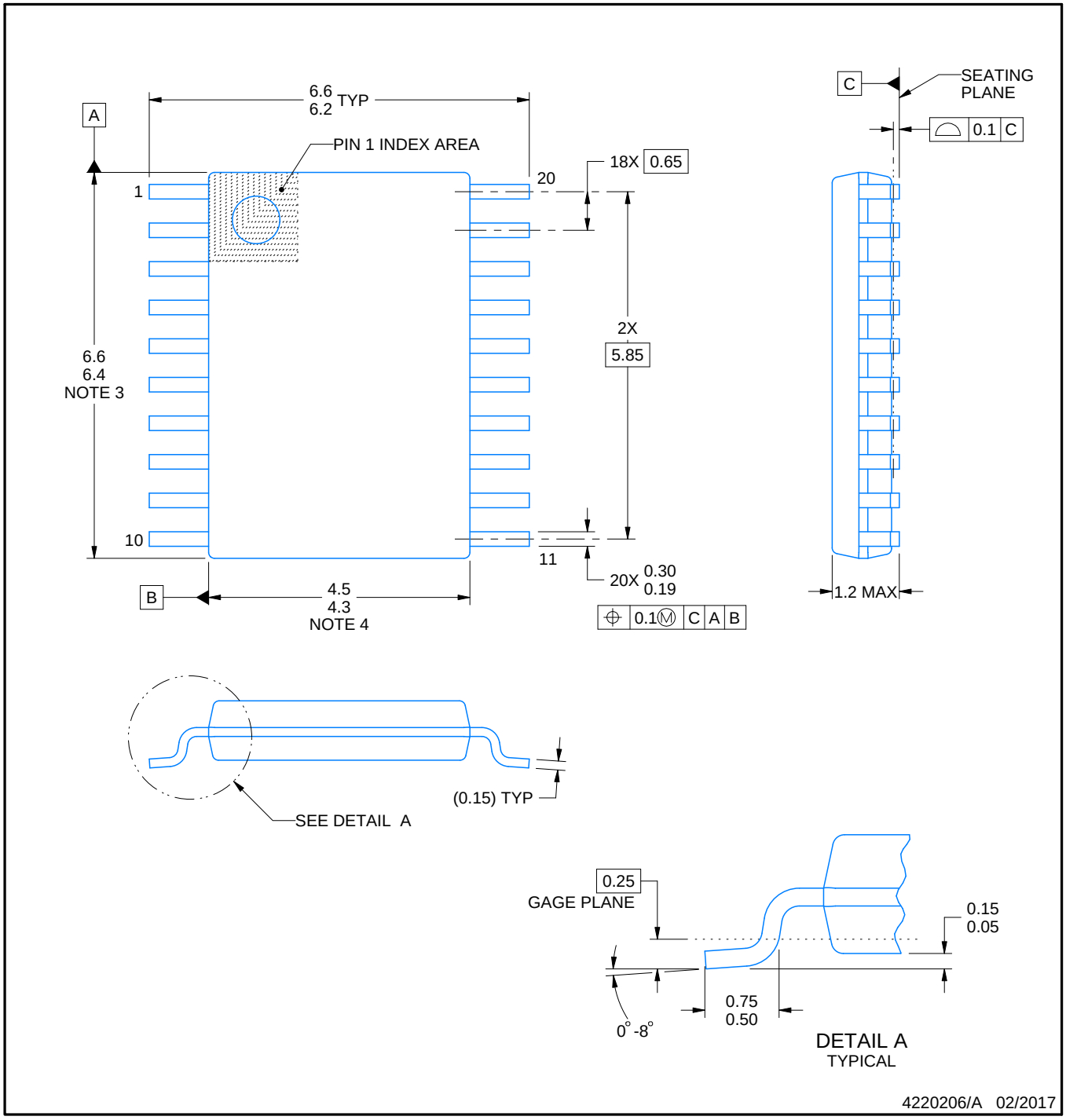

NOTES:

1. All linear dimensions are in millimeters. Any dimensions in parenthesis are for reference only. Dimensioning and tolerancing per ASME Y14.5M.
2. This drawing is subject to change without notice.
3. This dimension does not include mold flash, protrusions, or gate burrs. Mold flash, protrusions, or gate burrs shall not exceed 0.15 mm per side.
4. This dimension does not include interlead flash. Interlead flash shall not exceed 0.25 mm per side.
5. Reference JEDEC registration MO-153.

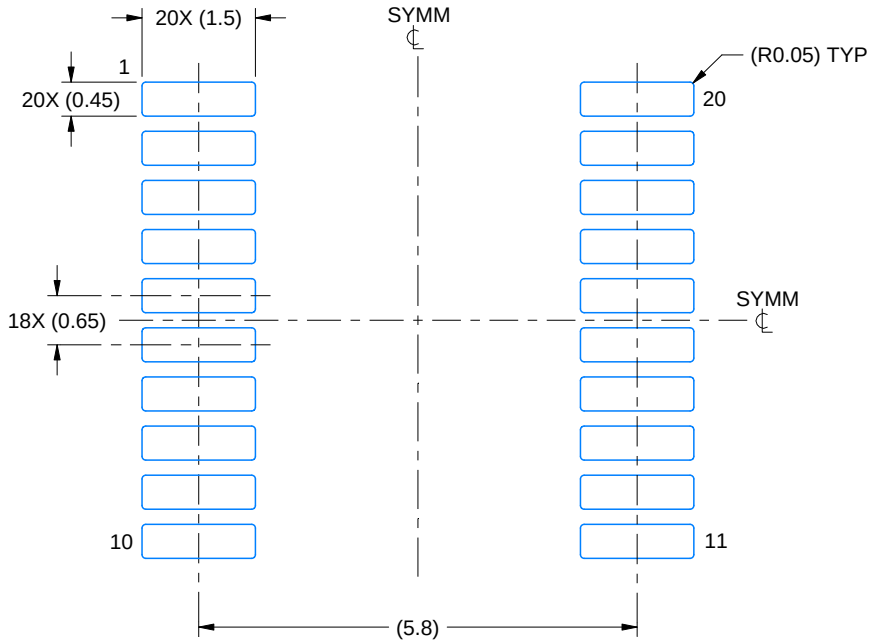

LAND PATTERN EXAMPLE
EXPOSED METAL SHOWN
SCALE: 10X

NON-SOLDER MASK DEFINED (PREFERRED)

SOLDER MASK DEFINED

SOLDER MASK DETAILS

4220206/A 02/2017

NOTES: (continued)

6. Publication IPC-7351 may have alternate designs.
7. Solder mask tolerances between and around signal pads can vary based on board fabrication site.

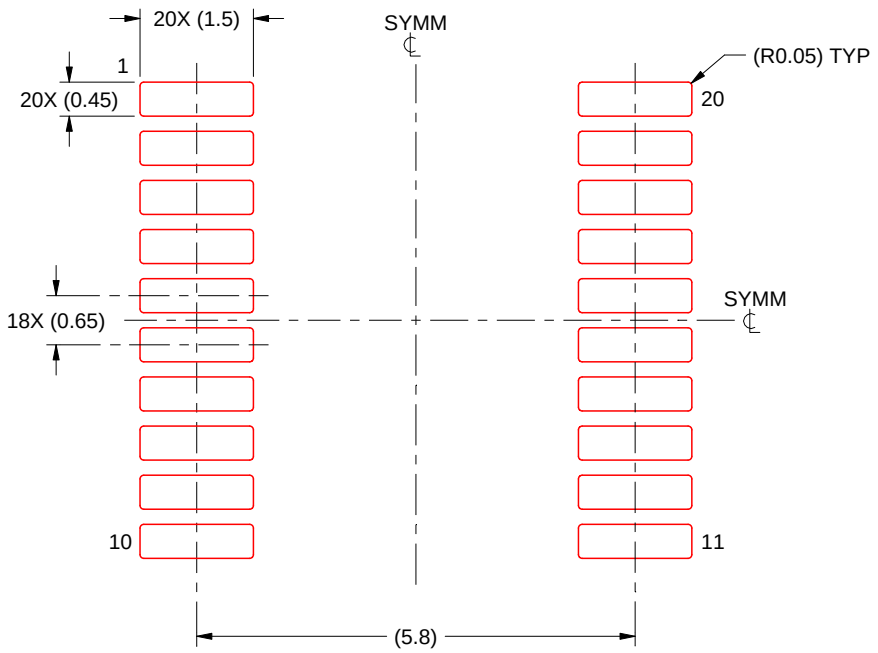

SOLDER PASTE EXAMPLE
BASED ON 0.125 mm THICK STENCIL
SCALE: 10X

4220206/A 02/2017

NOTES: (continued)

8. Laser cutting apertures with trapezoidal walls and rounded corners may offer better paste release. IPC-7525 may have alternate design recommendations.
9. Board assembly site may have different recommendations for stencil design.

PW (R–PDSO–G20) PLASTIC SMALL OUTLINE

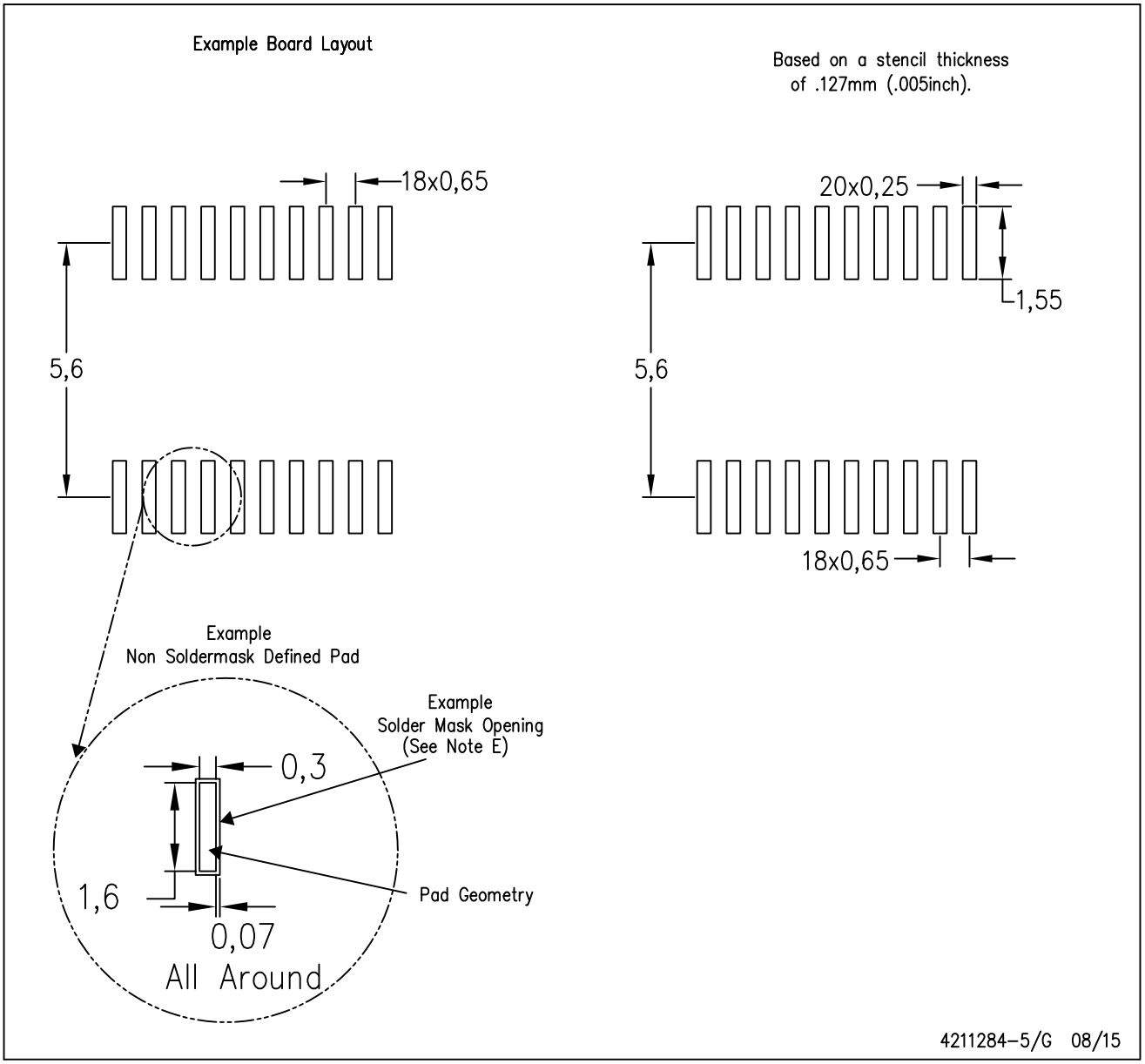

NOTES:
A. All linear dimensions are in millimeters.
B. This drawing is subject to change without notice.
C. Publication IPC–7351 is recommended for alternate design.
D. Laser cutting apertures with trapezoidal walls and also rounding corners will offer better paste release. Customers should contact their board assembly site for stencil design recommendations. Refer to IPC–7525 for other stencil recommendations.
E. Customers should contact their board fabrication site for solder mask tolerances between and around signal pads.

FK (S–CQCC–N**) LEADLESS CERAMIC CHIP CARRIER

28 TERMINAL SHOWN

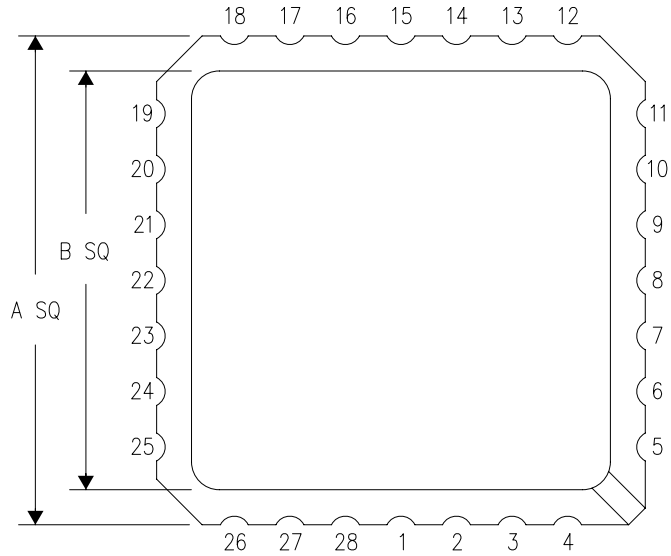

NO. OF TERMINALS **	A		B	
	MIN	MAX	MIN	MAX
20	0.342 (8,69)	0.358 (9,09)	0.307 (7,80)	0.358 (9,09)
28	0.442 (11,23)	0.458 (11,63)	0.406 (10,31)	0.458 (11,63)
44	0.640 (16,26)	0.660 (16,76)	0.495 (12,58)	0.560 (14,22)
52	0.740 (18,78)	0.761 (19,32)	0.495 (12,58)	0.560 (14,22)
68	0.938 (23,83)	0.962 (24,43)	0.850 (21,6)	0.858 (21,8)
84	1.141 (28,99)	1.165 (29,59)	1.047 (26,6)	1.063 (27,0)

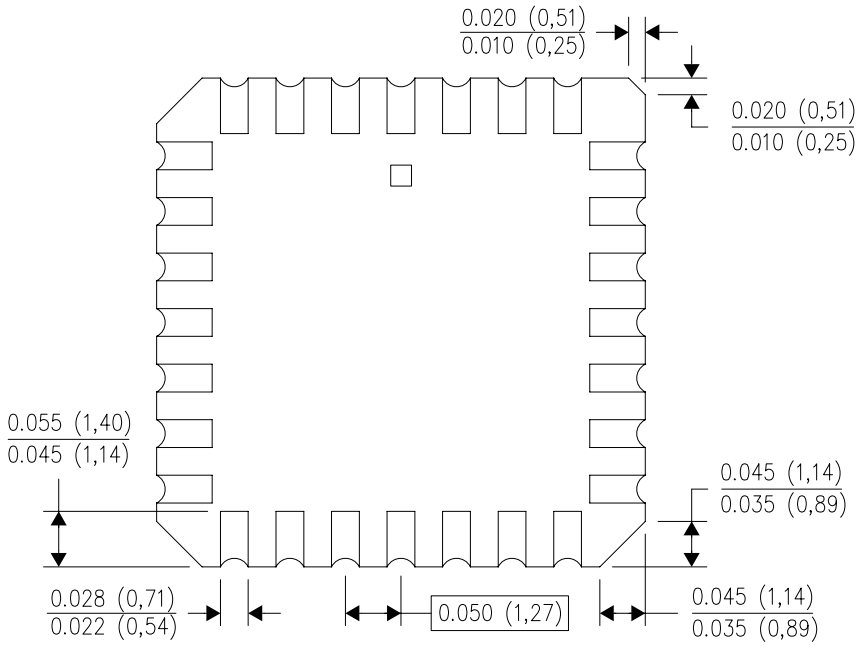

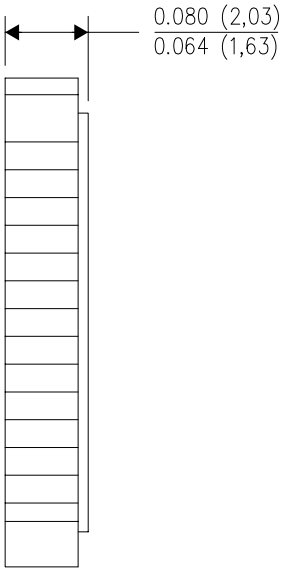

4040140/D 01/11

NOTES:
A. All linear dimensions are in inches (millimeters).
B. This drawing is subject to change without notice.
C. This package can be hermetically sealed with a metal lid.
D. Falls within JEDEC MS–004

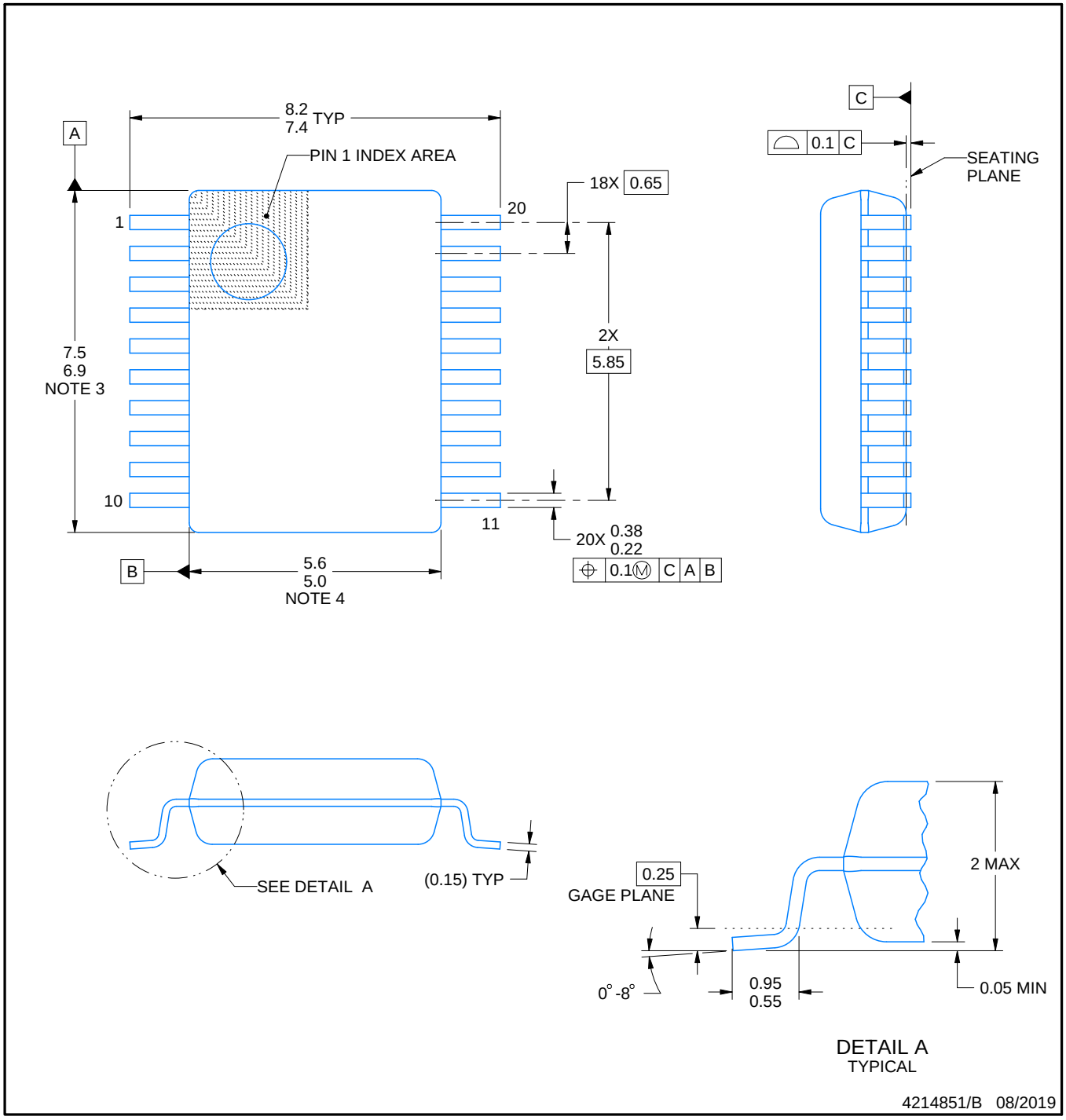

NOTES:

1. All linear dimensions are in millimeters. Any dimensions in parenthesis are for reference only. Dimensioning and tolerancing per ASME Y14.5M.
2. This drawing is subject to change without notice.
3. This dimension does not include mold flash, protrusions, or gate burrs. Mold flash, protrusions, or gate burrs shall not exceed 0.15 mm per side.
4. This dimension does not include interlead flash. Interlead flash shall not exceed 0.25 mm per side.
5. Reference JEDEC registration MO-150.

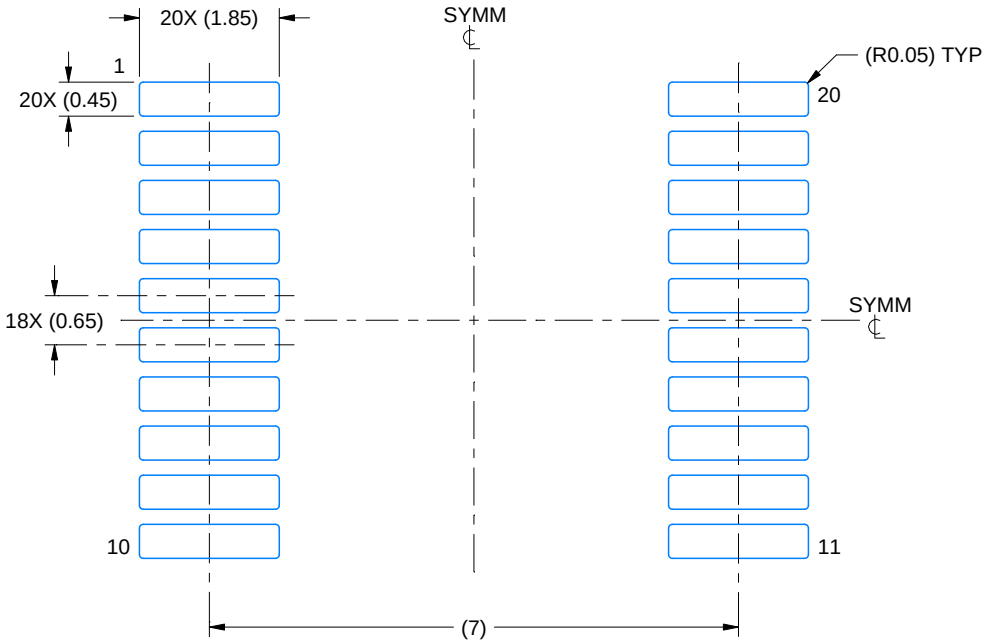

LAND PATTERN EXAMPLE
EXPOSED METAL SHOWN
SCALE: 10X

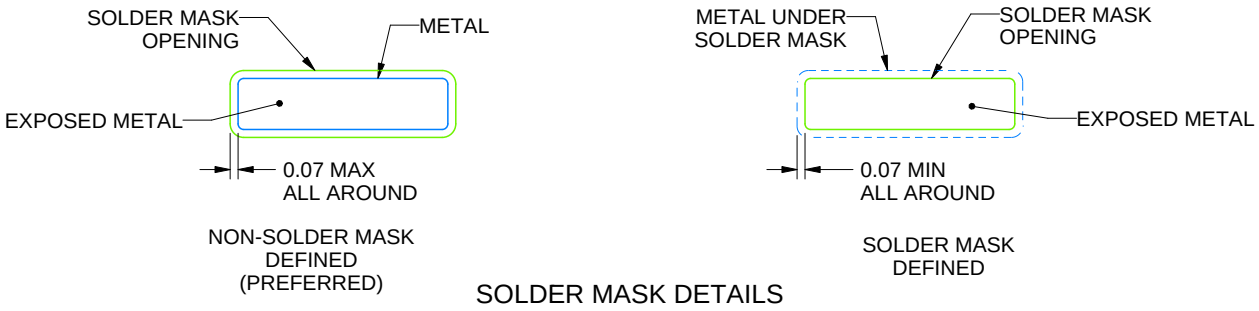

SOLDER MASK DETAILS

4214851/B 08/2019

NOTES: (continued)

6. Publication IPC-7351 may have alternate designs.
7. Solder mask tolerances between and around signal pads can vary based on board fabrication site.

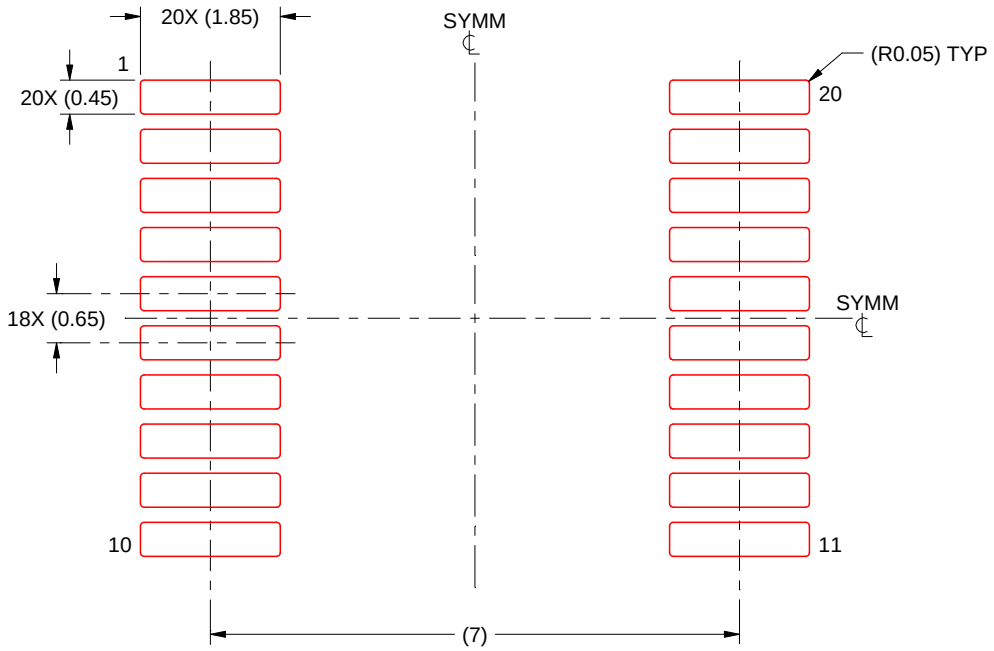

SOLDER PASTE EXAMPLE
BASED ON 0.125 mm THICK STENCIL
SCALE: 10X

4214851/B 08/2019

NOTES: (continued)

8. Laser cutting apertures with trapezoidal walls and rounded corners may offer better paste release. IPC-7525 may have alternate design recommendations.
9. Board assembly site may have different recommendations for stencil design.

MECHANICAL DATA

NS (R-PDSO-G)** **PLASTIC SMALL-OUTLINE PACKAGE**

14-PINS SHOWN

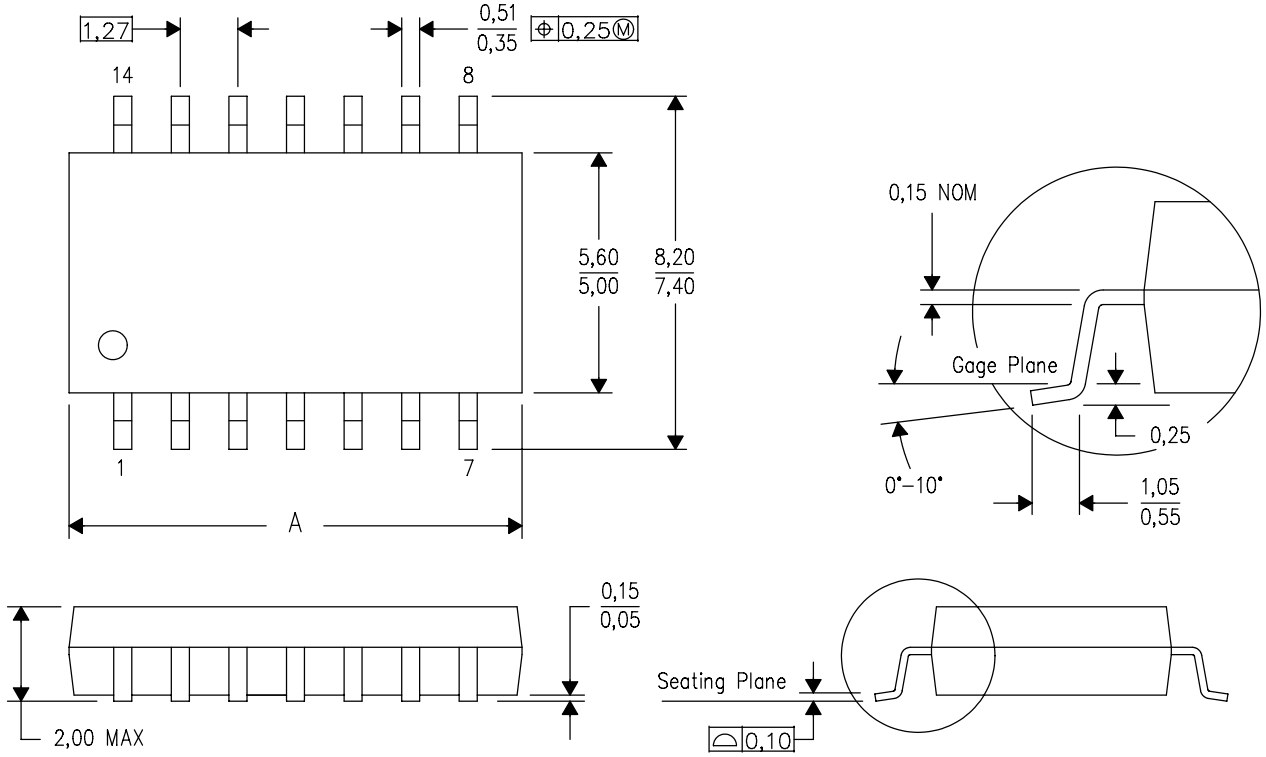

DIM \ PINS **	14	16	20	24
A MAX	10,50	10,50	12,90	15,30
A MIN	9,90	9,90	12,30	14,70

4040062/C 03/03

NOTES:
A. All linear dimensions are in millimeters.
B. This drawing is subject to change without notice.
C. Body dimensions do not include mold flash or protrusion, not to exceed 0,15.

J (R–GDIP–T**) CERAMIC DUAL IN–LINE PACKAGE

14 LEADS SHOWN

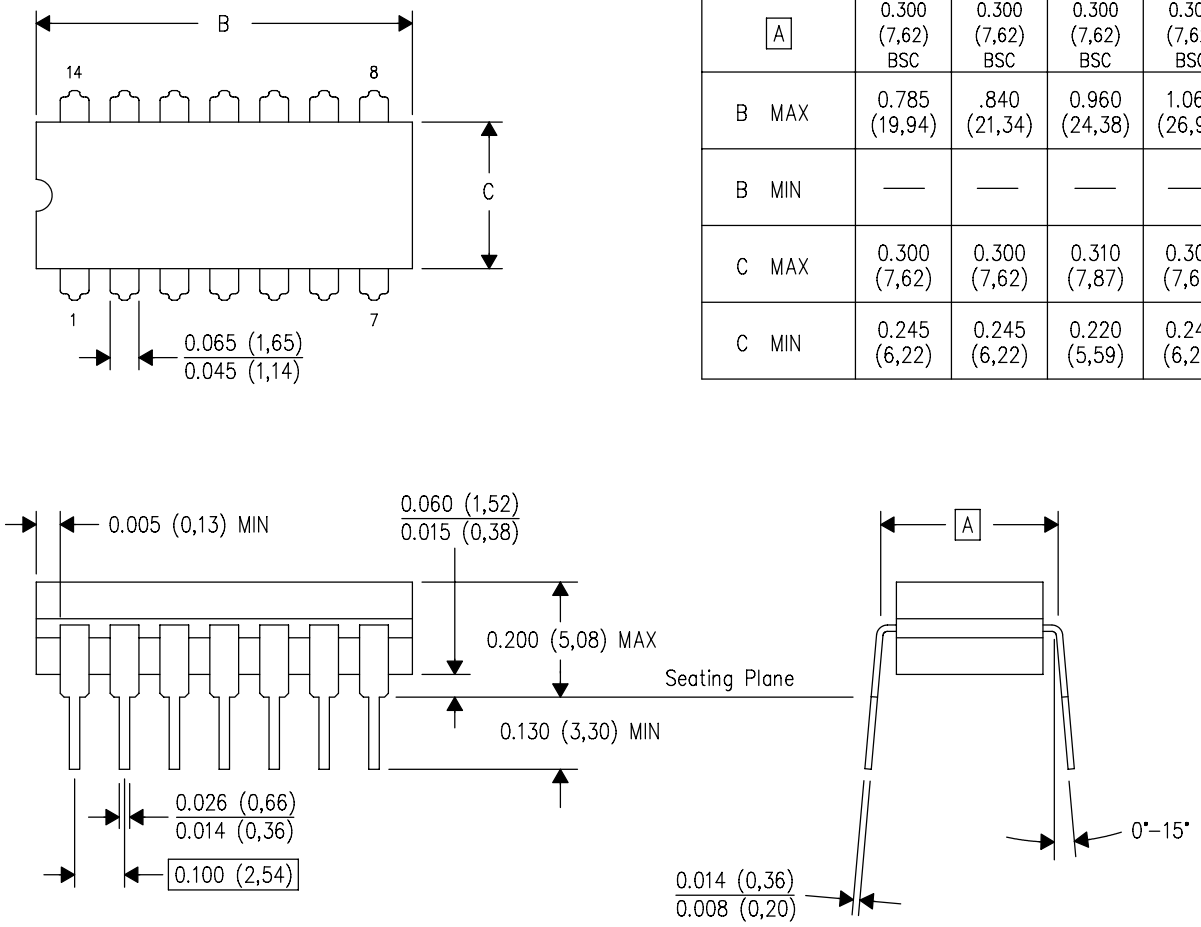

DIM \ PINS **	14	16	18	20
A	0.300 (7,62) BSC	0.300 (7,62) BSC	0.300 (7,62) BSC	0.300 (7,62) BSC
B MAX	0.785 (19,94)	.840 (21,34)	0.960 (24,38)	1.060 (26,92)
B MIN	—	—	—	—
C MAX	0.300 (7,62)	0.300 (7,62)	0.310 (7,87)	0.300 (7,62)
C MIN	0.245 (6,22)	0.245 (6,22)	0.220 (5,59)	0.245 (6,22)

4040083/F 03/03

NOTES:
- A. All linear dimensions are in inches (millimeters).
- B. This drawing is subject to change without notice.
- C. This package is hermetically sealed with a ceramic lid using glass frit.
- D. Index point is provided on cap for terminal identification only on press ceramic glass frit seal only.
- E. Falls within MIL STD 1835 GDIP1–T14, GDIP1–T16, GDIP1–T18 and GDIP1–T20.

N (R–PDIP–T**) PLASTIC DUAL–IN–LINE PACKAGE

16 PINS SHOWN

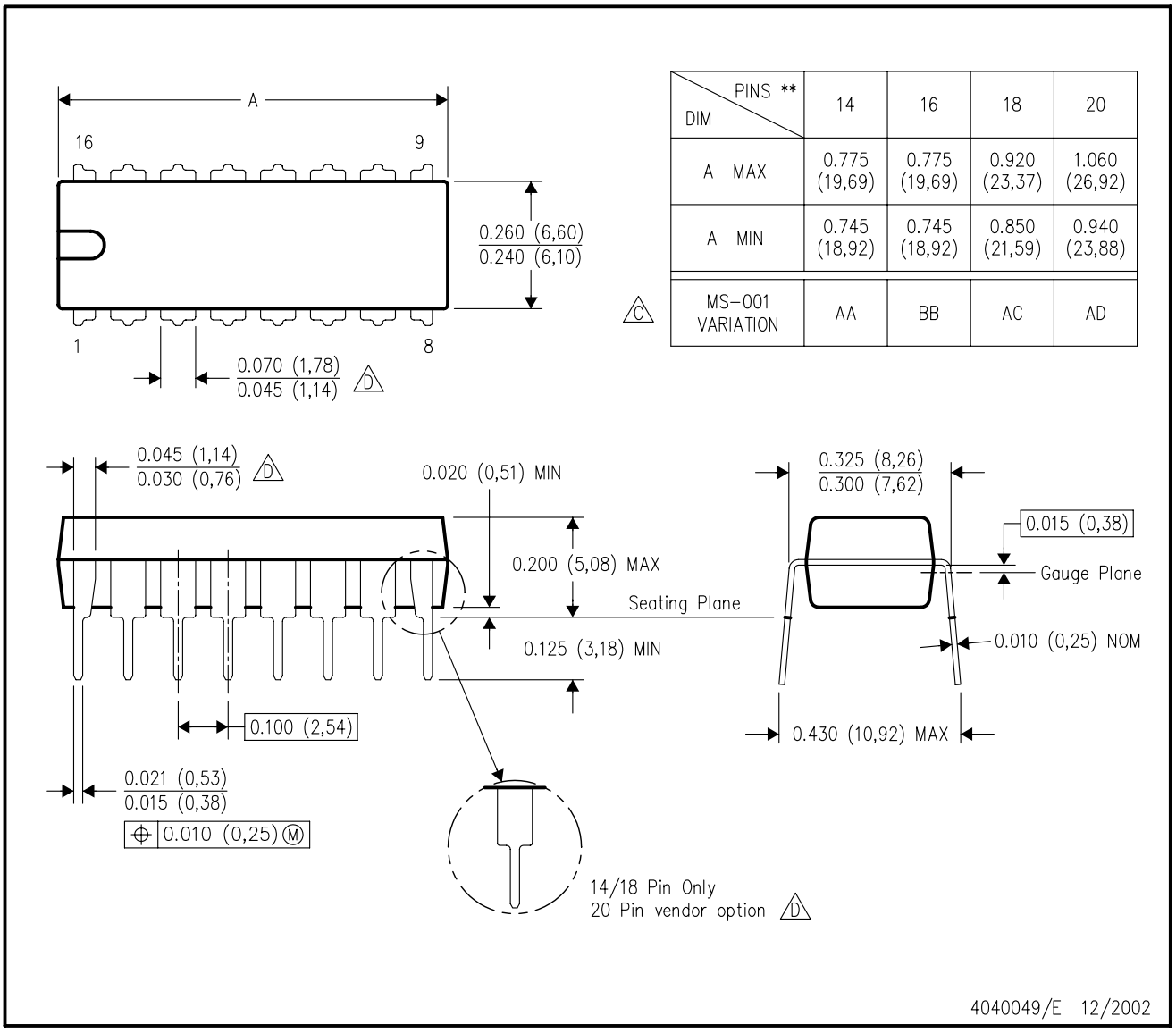

DIM \ PINS **	14	16	18	20
A MAX	0.775 (19,69)	0.775 (19,69)	0.920 (23,37)	1.060 (26,92)
A MIN	0.745 (18,92)	0.745 (18,92)	0.850 (21,59)	0.940 (23,88)
MS–001 VARIATION (C)	AA	BB	AC	AD

NOTES:
A. All linear dimensions are in inches (millimeters).
B. This drawing is subject to change without notice.
C. Falls within JEDEC MS–001, except 18 and 20 pin minimum body length (Dim A).
D. The 20 pin end lead shoulder width is a vendor option, either half or full width.

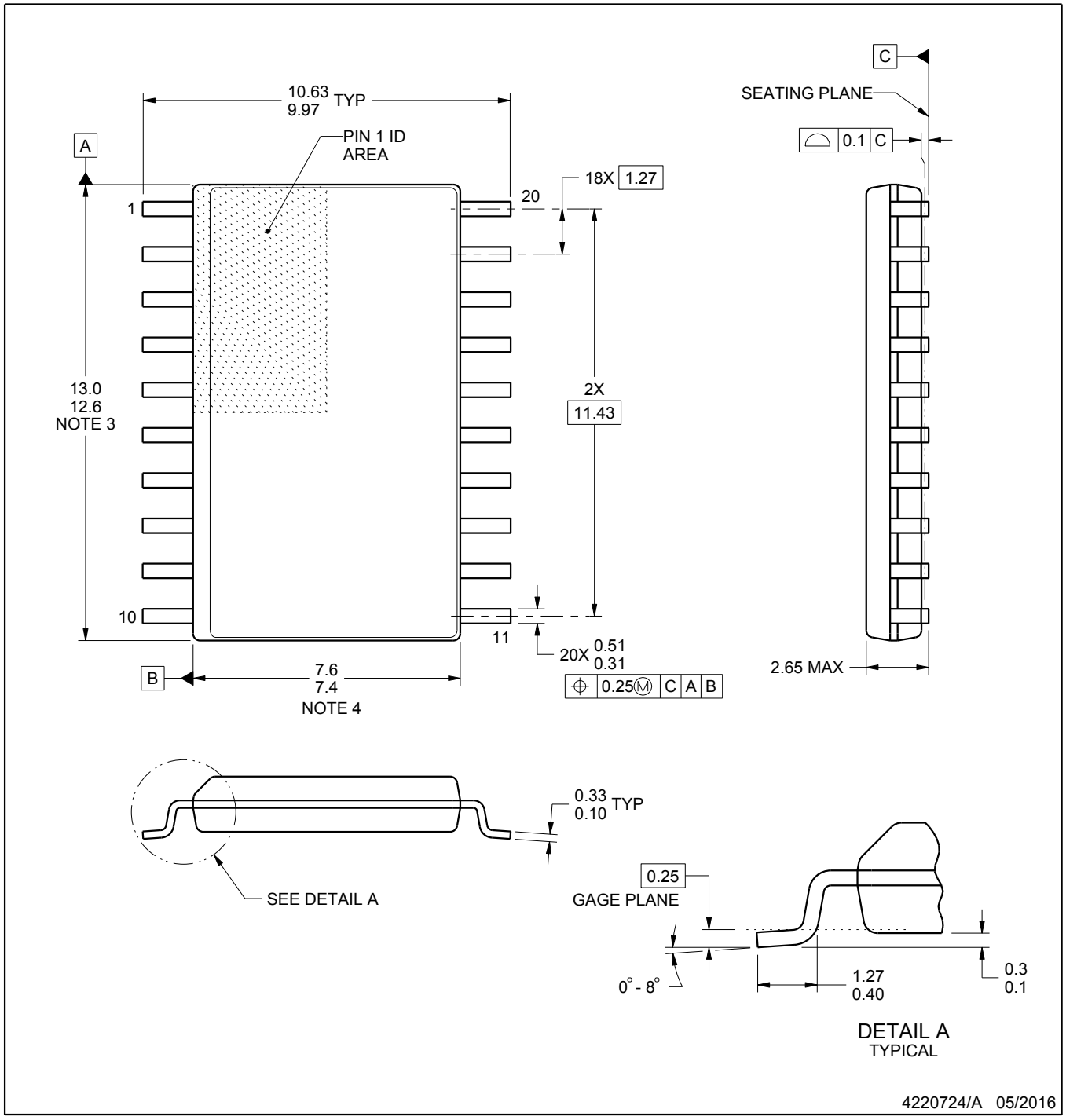

NOTES:

1. All linear dimensions are in millimeters. Dimensions in parenthesis are for reference only. Dimensioning and tolerancing per ASME Y14.5M.
2. This drawing is subject to change without notice.
3. This dimension does not include mold flash, protrusions, or gate burrs. Mold flash, protrusions, or gate burrs shall not exceed 0.15 mm per side.
4. This dimension does not include interlead flash. Interlead flash shall not exceed 0.43 mm per side.
5. Reference JEDEC registration MS-013.

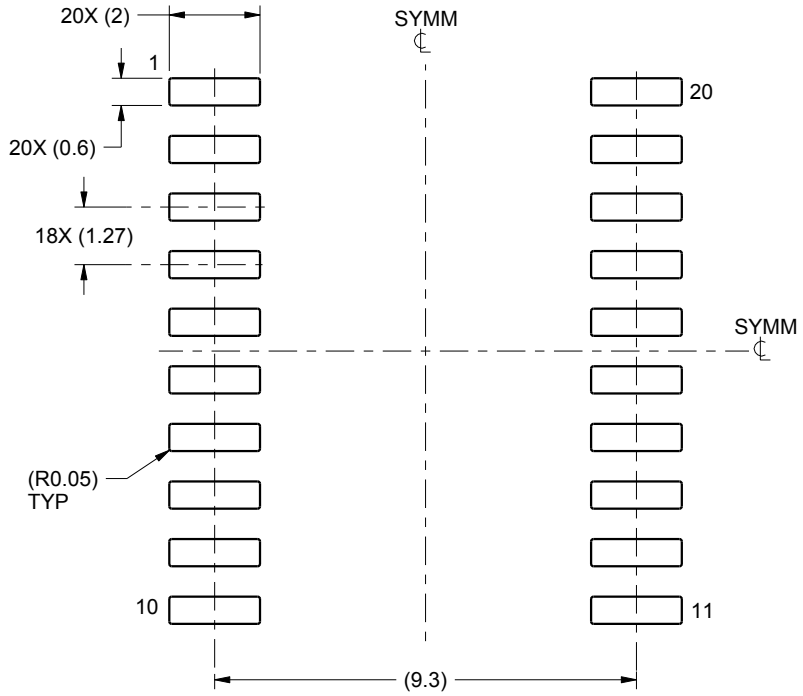

LAND PATTERN EXAMPLE
SCALE:6X

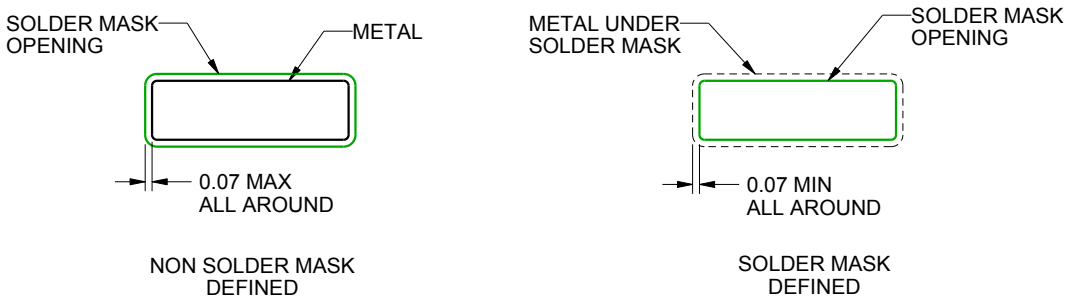

SOLDER MASK DETAILS

4220724/A 05/2016

NOTES: (continued)

6. Publication IPC-7351 may have alternate designs.
7. Solder mask tolerances between and around signal pads can vary based on board fabrication site.

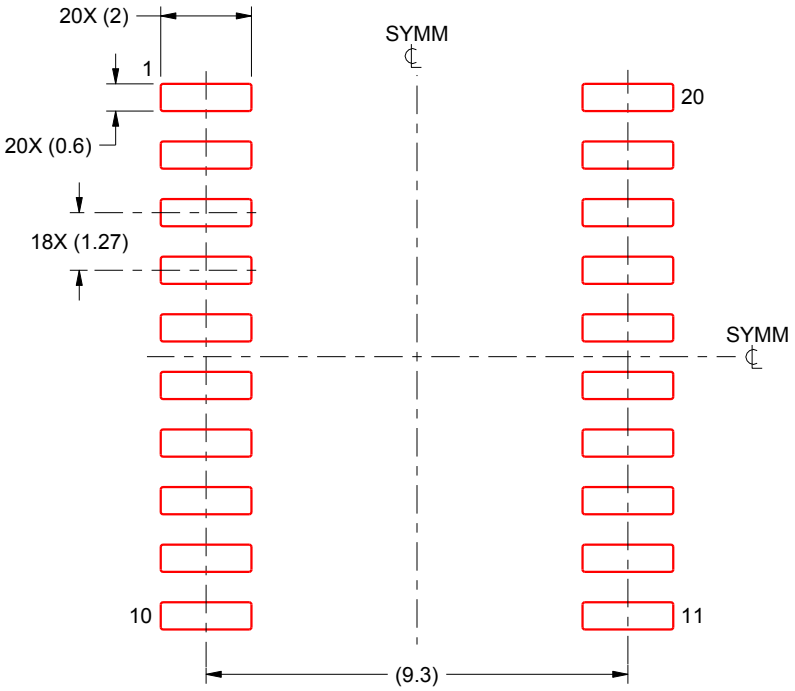

SOLDER PASTE EXAMPLE
BASED ON 0.125 mm THICK STENCIL
SCALE:6X

4220724/A 05/2016

NOTES: (continued)

8. Laser cutting apertures with trapezoidal walls and rounded corners may offer better paste release. IPC-7525 may have alternate design recommendations.
9. Board assembly site may have different recommendations for stencil design.

IMPORTANT NOTICE AND DISCLAIMER

TI PROVIDES TECHNICAL AND RELIABILITY DATA (INCLUDING DATA SHEETS), DESIGN RESOURCES (INCLUDING REFERENCE DESIGNS), APPLICATION OR OTHER DESIGN ADVICE, WEB TOOLS, SAFETY INFORMATION, AND OTHER RESOURCES “AS IS” AND WITH ALL FAULTS, AND DISCLAIMS ALL WARRANTIES, EXPRESS AND IMPLIED, INCLUDING WITHOUT LIMITATION ANY IMPLIED WARRANTIES OF MERCHANTABILITY, FITNESS FOR A PARTICULAR PURPOSE OR NON-INFRINGEMENT OF THIRD PARTY INTELLECTUAL PROPERTY RIGHTS.

These resources are intended for skilled developers designing with TI products. You are solely responsible for (1) selecting the appropriate TI products for your application, (2) designing, validating and testing your application, and (3) ensuring your application meets applicable standards, and any other safety, security, regulatory or other requirements.

These resources are subject to change without notice. TI grants you permission to use these resources only for development of an application that uses the TI products described in the resource. Other reproduction and display of these resources is prohibited. No license is granted to any other TI intellectual property right or to any third party intellectual property right. TI disclaims responsibility for, and you will fully indemnify TI and its representatives against, any claims, damages, costs, losses, and liabilities arising out of your use of these resources.

TI’s products are provided subject to TI’s Terms of Sale or other applicable terms available either on ti.com or provided in conjunction with such TI products. TI’s provision of these resources does not expand or otherwise alter TI’s applicable warranties or warranty disclaimers for TI products.

TI objects to and rejects any additional or different terms you may have proposed.

Mailing Address: Texas Instruments, Post Office Box 655303, Dallas, Texas 75265
Copyright © 2022, Texas Instruments Incorporated