DS32EV100 Programmable Single Equalizer

Check for Samples: DS32EV100

FEATURES

- **Equalizes Up to 14 dB loss at 3.2 Gbps**
- **8 levels of Programmable Equalization**
- **Operates up to 3.2 Gbps with 40” FR4 Traces**
- **0.12 UI Residual Deterministic Jitter at 3.2 Gbps with 40” FR4 Traces**
- **Single 2.5V or 3.3V Power Supply**
- **Supports AC or DC-Coupling with Wide Input Common-Mode**
- **Low power Consumption: 100 mW Typ at 2.5V**
- **Small 3 mm x 4 mm 14-pin WSON Package**
- **> 8 kV HBM ESD Rating**
- **-40 to 85°C Operating Temperature Range**

DESCRIPTION

The DS32EV100 programmable equalizer provides compensation for transmission medium losses and reduces the medium-induced deterministic jitter for NRZ data channel. The DS32EV100 is optimized for operation up to 3.2 Gbps for both cables and FR4 traces. The equalizer channel has eight levels of input equalization that can be programmed by three control pins.

The equalizer supports both AC and DC-coupled data paths for long run length data patterns such as PRBS-31, and balanced codes such as 8b/10b. The device uses differential current-mode logic (CML) inputs and outputs. The DS32EV100 is available in a 3 mm x 4 mm 14-pin WSON package. Power is supplied from either a 2.5V or 3.3V supply.

Simplified Application Diagram

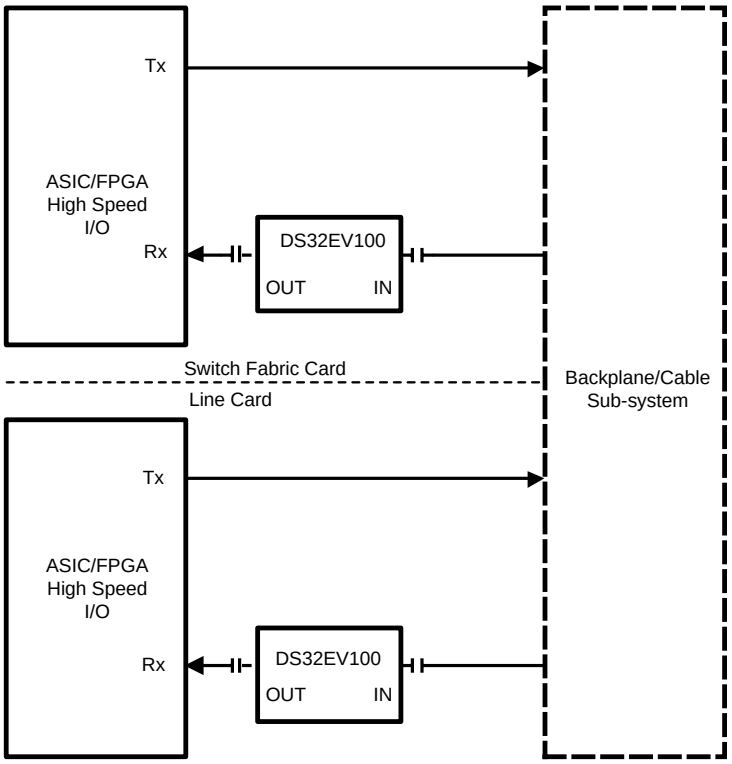

Please be aware that an important notice concerning availability, standard warranty, and use in critical applications of Texas Instruments semiconductor products and disclaimers thereto appears at the end of this data sheet.

All trademarks are the property of their respective owners.

PRODUCTION DATA information is current as of publication date. Products conform to specifications per the terms of the Texas Instruments standard warranty. Production processing does not necessarily include testing of all parameters.

Copyright © 2006–2013, Texas Instruments Incorporated

Pin Diagram

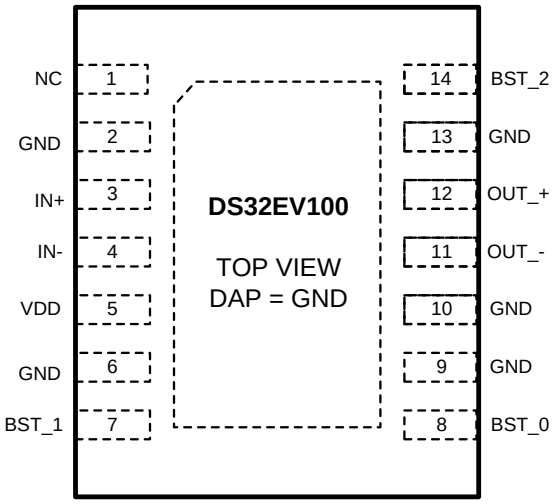

Figure 1. 14-Pin WSON Package (3 mm x 4 mm x 0.8 mm, 0.5 mm pitch) See Package Number NHK0014A

PIN DESCRIPTIONS(1)

Pin Name	Pin #	I/O, Type	Description
HIGH SPEED DIFFERENTIAL I/O			
IN− IN+	4 3	I, CML	Inverting and non-inverting CML differential inputs to the equalizer. An on-chip 100Ω terminating resistor is connected between IN+ and IN−. Refer to Figure 5.
OUT− OUT+	11 12	O, CML	Inverting and non-inverting CML differential outputs from the equalizer. An on-chip 50Ω terminating resistor connects OUT+ to V_{DD} and OUT− to V_{DD}.
EQUALIZATION CONTROL			
BST_2 BST_1 BST_0	14 7 8	I, LVCMOS	BST_2, BST_1, and BST_0 select the equalizer strength. BST_2 is internally pulled high. BST_1 and BST_0 are internally pulled low.
POWER			
V_{DD}	5	Power	V_{DD} = 2.5V ±5% or 3.3V ±10%. V_{DD} pins should be tied to V_{DD} plane through low inductance path. A 0.01µF bypass capacitor should be connected between each V_{DD} pin to GND planes.
GND	2, 6, 9, 10, 13	Power	Ground reference. GND should be tied to a solid ground plane through a low impedance path.
DAP	PAD	Power	Ground reference. The exposed pad at the center of the package must be connected to ground plane of the board.
OTHER			
NC	1		Reserved. Leave no Connect.

(1) I = Input, O = Output

These devices have limited built-in ESD protection. The leads should be shorted together or the device placed in conductive foam during storage or handling to prevent electrostatic damage to the MOS gates.

Copyright © 2006–2013, Texas Instruments Incorporated

Absolute Maximum Ratings[1][2]

Supply Voltage (V_{DD})	−0.5V to +4.0V
CMOS Input Voltage	−0.5V to +4.0V
CMOS Output Voltage	–0.5V to +4.0V
CML Input/Output Voltage	–0.5V to +4.0V
Junction Temperature	+150°C
Storage Temperature	−65°C to +150°C
Lead Temperature Soldering, 4 sec	+260°C
ESD Rating	
HBM, 1.5 kΩ, 100 pF	> 8 kV
EIAJ, 0Ω, 200 pF	> 250 V
Thermal Resistance, θ_{JA}, No Airflow	40 °C/W

(1) "Absolute Maximum Ratings" indicate limits beyond which damage to the device may occur, including inoperability and degradation of device reliability and/or performance. Functional operation of the device and/or non-degradation at the Absolute Maximum Ratings or other conditions beyond those indicated in the Recommended Operating Conditions is not implied. The Recommended Operating Conditions indicate conditions at which the device is functional and the device should not be operated beyond such conditions. Absolute Maximum Numbers are guaranteed for a junction temperature range of –40°C to +125°C. Models are validated to Maximum Operating Voltages only.
(2) If Military/Aerospace specified devices are required, please contact the TI Sales Office/Distributors for availability and specifications.

Recommended Operating Conditions

	Min	Typ	Max	Units
Supply Voltage [1]				
$V_{DD2.5}$ to GND	2.375	2.5	2.625	V
$V_{DD3.3}$ to GND	3.0	3.3	3.6	V
Ambient Temperature	−40	25	+85	°C

(1) The $V_{DD2.5}$ is V_{DD} = 2.5V ± 5% and $V_{DD3.3}$ is V_{DD} = 3.3V ± 10%.

Electrical Characteristics

Over recommended operating supply and temperature ranges unless otherwise specified.[1][2]

Symbol	Parameter	Conditions	Min	Typ[1]	Max	Units
POWER						
P	Power Supply Consumption	$V_{DD2.5}$		100	150	mW
		$V_{DD3.3}$		140	200	mW
N	Supply Noise Tolerance [3]	50 Hz – 100 Hz 100 Hz – 10 MHz 10 MHz – 1.6GHz		100 40 10		mV_{P-P} mV_{P-P} mV_{P-P}
LVTTL DC SPECIFICATIONS						
V_{IH}	High Level Input Voltage	$V_{DD2.5}$	1.6		$V_{DD2.5}$	V
		$V_{DD3.3}$	2.0		$V_{DD3.3}$	V
V_{IL}	Low Level Input Voltage		−0.3		0.8	V

(1) Typical values represent most likely parametric norms at V_{DD} = 3.3V or 2.5V, T_A = 25°C., and at the Recommended Operation Conditions at the time of product characterization and are not guaranteed.
(2) The Electrical Characteristics tables list guaranteed specifications under the listed Recommended Operating Conditions except as otherwise modified or specified by the Electrical Characteristics Conditions and/or Notes. Typical specifications are estimations only and are not guaranteed.
(3) Allowed supply noise (mV_{P-P} sine wave) under typical conditions.

Copyright © 2006–2013, Texas Instruments Incorporated

Electrical Characteristics (continued)

Over recommended operating supply and temperature ranges unless otherwise specified.(1)(2)

Symbol	Parameter	Conditions	Min	Typ (1)	Max	Units
V_{OH}	High Level Output Voltage	I_{OH} = –3mA, $V_{DD2.5}$	2.0			V
		I_{OH} = –3mA, $V_{DD3.3}$	2.4			V
V_{OL}	Low Level Output Voltage	I_{OL} = 3mA			0.4	V
I_{IN}	Input Current	V_{IN} = V_{DD}		+1.8	+15	µA
		V_{IN} = GND	−15	0		µA
I_{IN-P}	Input Leakage Current with Internal Pull-Down/Up Resistors	V_{IN} = V_{DD}, with internal pull-down resistors		+95		µA
		V_{IN} = GND, with internal pull-up resistors	–20			µA
CML RECEIVER INPUTS (IN+, IN−)						
V_{TX}	Source Transmit Launch Signal Level (IN diff)	AC-Coupled or DC-Coupled Requirement, Differential measurement at point A. (Figure 2)	400		1600	mV_{P-P}
V_{INTRE}	Input Threshold Voltage	Differential measurement at point B. (Figure 2)		120		mV_{P-P}
V_{DDTX}	Supply Voltage of Transmitter to EQ	DC-Coupled Requirement	1.6		V_{DD}	V
V_{ICMDC}	Input Common-Mode Voltage	DC-Coupled Requirement Differential measurement at point A. (Figure 2), (4)	V_{DDTX}-0.8		V_{DDTX}-0.2	V
R_{LI}	Differential Input Return Loss	100 MHz – 1.6 GHz, with fixture's effect de-embedded		10		dB
R_{IN}	Input Resistance	Differential Across IN+ and IN-. (Figure 5)	85	100	115	Ω
CML OUTPUTS (OUT+, OUT−)						
V_{OD}	Output Differential Voltage Level (OUT diff)	Differential measurement with OUT+ and OUT- terminated by 50Ω to GND, AC-Coupled (Figure 3)	550	620	725	mV_{P-P}
V_{OCM}	Output Common-Mode Voltage	Single-ended measurement DC-Coupled with 50Ω terminations (4)	V_{DD}-0.2		V_{DD}-0.1	V
t_R, t_F	Transition Time	20% to 80% of differential output voltage, measured within 1" from output pins. (Figure 3) (4)	20		60	ps
R_O	Output Resistance	Single-ended to V_{DD}	42	50	58	Ω
R_{LO}	Differential Output Return Loss	100 MHz – 1.6 GHz, with fixture's effect de-embedded. IN+ = static high.		10		dB
t_{PLHD}	Differential Low to High Propagation Delay	Propagation delay measurement at 50% V_{OD} between input to output, 100 Mbps (Figure 4), (4)		240		ps
t_{PHLD}	Differential High to Low Propagation Delay			240		ps
EQUALIZATION						
DJ1	Residual Deterministic Jitter at 3.2 Gbps	40" of 6 mil microstrip FR4, EQ Setting 0x06, PRBS-7 (2^7-1) pattern (5)		0.12	0.2	UI_{P-P}
DJ2	Residual Deterministic Jitter at 2.5 Gbps	40" of 6 mil microstrip FR4, EQ Setting 0x06, PRBS-7 (2^7-1) pattern (5) (6)		0.1	0.16	UI_{P-P}

(4) Measured with clock-like {11111 00000} pattern.
(5) Specification is guaranteed by characterization at optimal boost setting and is not tested in production.
(6) Deterministic jitter is measured at the differential outputs (point C of Figure 2), minus the deterministic jitter before the test channel (point A of Figure 2). Random jitter is removed through the use of averaging or similar means.

Copyright © 2006–2013, Texas Instruments Incorporated

Electrical Characteristics (continued)

Over recommended operating supply and temperature ranges unless otherwise specified.(1)(2)

Symbol	Parameter	Conditions	Min	Typ (1)	Max	Units
DJ3	Residual Deterministic Jitter at 1 Gbps	40” of 6 mil microstrip FR4, EQ Setting 0x06, PRBS-7 (2^7-1) pattern (5) (6)		0.05		UI_{P-P}
RJ	Random Jitter	(4) (7)		0.5		ps_{rms}

(7) Random jitter contributed by the equalizer is defined as sqrt ($J_{OUT}^2 - J_{IN}^2$). J_{OUT} is the random jitter at equalizer outputs in ps_{rms}, see point C of Figure 2; J_{IN} is the random jitter at the input of the equalizer in ps_{rms}, see Figure 2.

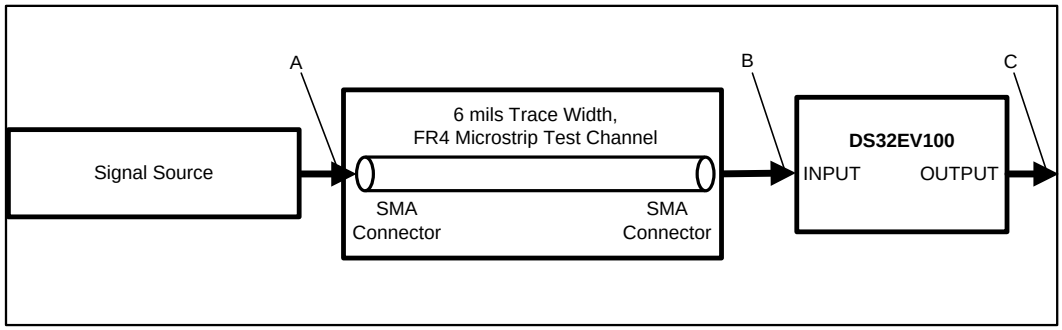

Figure 2. Test Setup Diagram

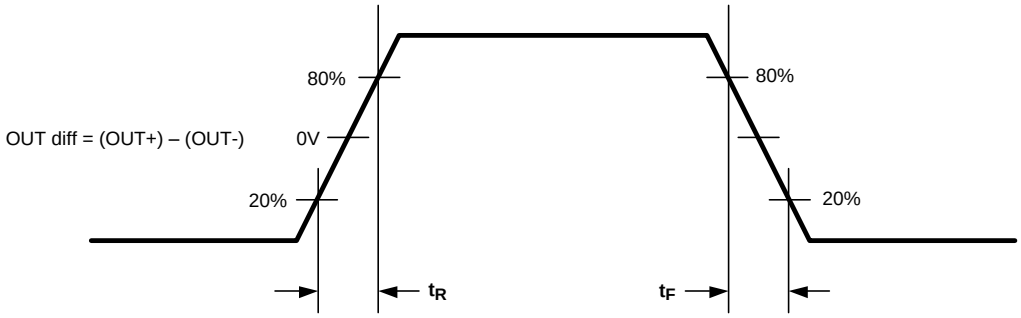

Figure 3. CML Output Transition Times

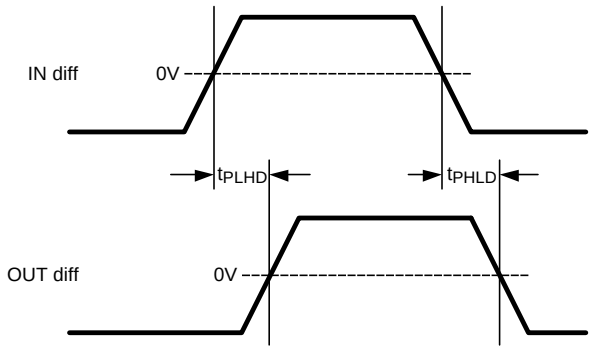

Figure 4. Propagation Delay Timing Diagram

Copyright © 2006–2013, Texas Instruments Incorporated

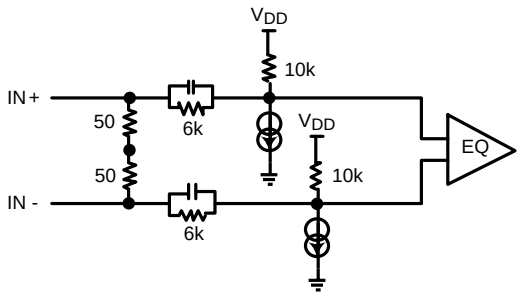

Figure 5. Simplified Receiver Input Termination Circuit

DS32EV100 FUNCTIONAL DESCRIPTIONS AND APPLICATIONS INFORMATION

The DS32EV100 is a programmable equalizer optimized for operation up to 3.2 Gbps for backplane and cable applications. The equalizer channel consists of an equalizer stage, a limiting amplifier, a DC offset correction block, and a CML driver as shown in Figure 6.

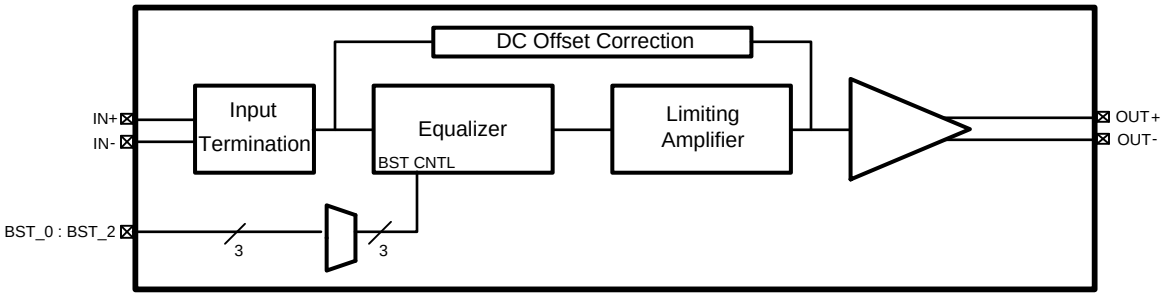

Figure 6. Simplified Block Diagram

EQUALIZER BOOST CONTROL

The equalizer channel supports eight programmable levels of equalization boost, and is controlled by the Boost Set pins (BST_[2:0]) in accordance with Table 1. The eight levels of boost settings enables the DS32EV100 to address a wide range of media loss and data rates.

Table 1. EQ Boost Control Table

6 mil Microstrip FR4 Trace Length (in)	24 AWG Twin-AX Cable Length (m)	Channel Loss 1.6 GHz (dB)	BST_N [2, 1, 0]
0	0	0	0 0 0
5	2	3	0 0 1
10	3	6	0 1 0
15	4	7	0 1 1
20	5	8	1 0 0 (Default)
25	6	10	1 0 1
30	7	12	1 1 0
40	10	14	1 1 1

Copyright © 2006–2013, Texas Instruments Incorporated

GENERAL RECOMMENDATIONS

The DS32EV100 is a high performance circuit capable of delivering excellent performance. Careful attention must be paid to the details associated with high-speed design as well as providing a clean power supply. Refer to the LVDS Owner's Manual for more detailed information on high-speed design tips to address signal integrity design issues.

PCB LAYOUT CONSIDERATIONS FOR DIFFERENTIAL PAIRS

The CML inputs and outputs must have a controlled differential impedance of 100Ω. It is preferable to route CML lines exclusively on one layer of the board, particularly for the input traces. The use of vias should be avoided if possible. If vias must be used, they should be used sparingly and must be placed symmetrically for each side of a given differential pair. Route the CML signals away from other signals and noise sources on the printed circuit board. See AN-1187 for additional information on WSON packages.

POWER SUPPLY BYPASSING

Two approaches are recommended to ensure that the DS32EV100 is provided with an adequate power supply. First, the supply (V_{DD}) and ground (GND) pins should be connected to power planes routed on adjacent layers of the printed circuit board. The layer thickness of the dielectric should be minimized so that the V_{DD} and GND planes create a low inductance supply with distributed capacitance. Second, careful attention to supply bypassing through the proper use of bypass capacitors is required. A 0.01µF bypass capacitor should be connected to each V_{DD} pin such that the capacitor is placed as close as possible to the DS32EV100. Smaller body size capacitors can help facilitate proper component placement. Additionally, three capacitors with capacitance in the range of 2.2 µF to 10 µF should be incorporated in the power supply bypassing design as well. These capacitors can be either tantalum or an ultra-low ESR ceramic and should be placed as close as possible to the DS32EV100.

DC COUPLING

The DS32EV100 supports both AC coupling with external ac coupling capacitor, and DC coupling to its upstream driver, or downstream receiver. With DC coupling, users must ensure the input signal common mode is within the range of the electrical specification V_{ICMDC} and the device output is terminated with 50 Ω to V_{DD}. When power-up and power-down the device, both the DS32EV100 and the downstream receiver should be power-up and power-down together. This is to avoid the internal ESD structures at the output of the DS32EV100 at power-down from being turned on by the downstream receiver.

Copyright © 2006–2013, Texas Instruments Incorporated

Typical Performance Eye Diagrams and Curves

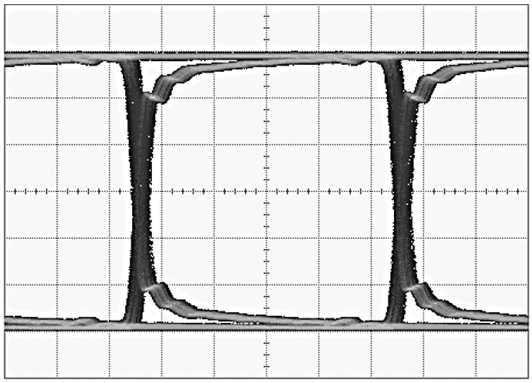

Figure 7. Equalized Signal (40 in FR4, 1 Gbps, PRBS 7, 0x07 Setting)

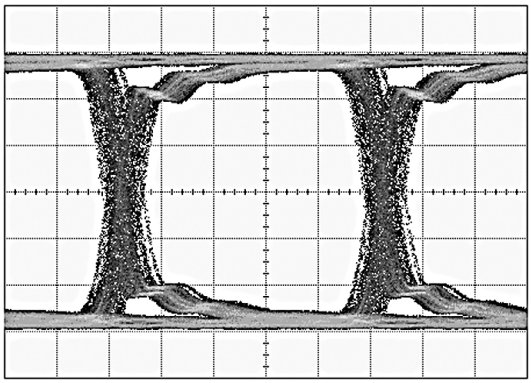

Figure 8. Equalized Signal (40 in FR4, 2.5 Gbps, PRBS 7, 0x07 Setting)

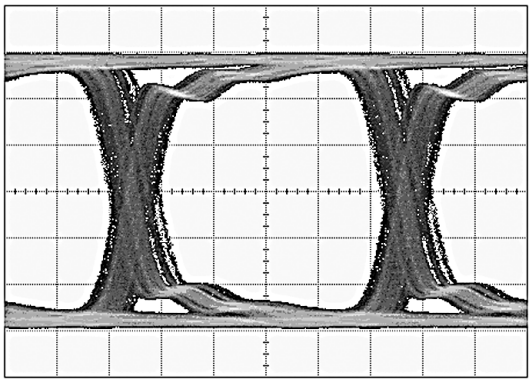

Figure 9. Equalized Signal (40 in FR4, 3.2Gbps, PRBS 7, 0x07 Setting)

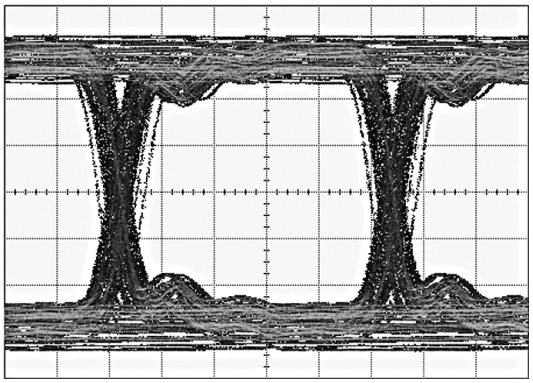

Figure 10. Equalized Signal (10m 24 AWG Twin-AX Cable, 3.2 Gbps, PRBS 7, 0x07 Setting)

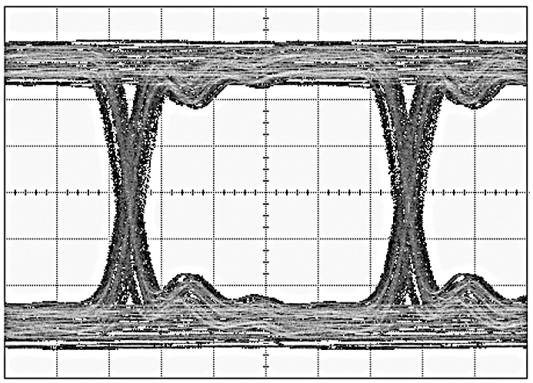

Figure 11. Equalized Signal (32 in Tyco XAUI Backplane, 3.125 Gbps, PRBS 7, 0x07 Setting

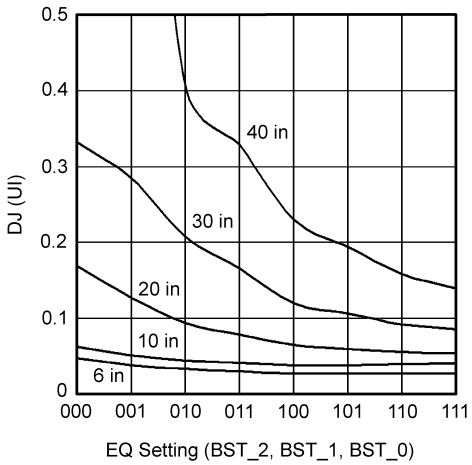

Figure 12. DJ vs. EQ Setting (3.2 Gbps)

Copyright © 2006–2013, Texas Instruments Incorporated

REVISION HISTORY

Changes from Revision C (February 2013) to Revision D **Page**

- Changed layout of National Data Sheet to TI format 8

Copyright © 2006–2013, Texas Instruments Incorporated

PACKAGING INFORMATION

Orderable Device	Status (1)	Package Type	Package Drawing	Pins	Package Qty	Eco Plan (2)	Lead finish/ Ball material (6)	MSL Peak Temp (3)	Op Temp (°C)	Device Marking (4/5)	Samples
DS32EV100SD/NOPB	ACTIVE	WSON	NHK	14	1000	RoHS & Green	SN	Level-1-260C-UNLIM	-40 to 85	D32E1SD	Samples

(1) The marketing status values are defined as follows:
ACTIVE: Product device recommended for new designs.
LIFEBUY: TI has announced that the device will be discontinued, and a lifetime-buy period is in effect.
NRND: Not recommended for new designs. Device is in production to support existing customers, but TI does not recommend using this part in a new design.
PREVIEW: Device has been announced but is not in production. Samples may or may not be available.
OBSOLETE: TI has discontinued the production of the device.

(2) **RoHS:** TI defines "RoHS" to mean semiconductor products that are compliant with the current EU RoHS requirements for all 10 RoHS substances, including the requirement that RoHS substance do not exceed 0.1% by weight in homogeneous materials. Where designed to be soldered at high temperatures, "RoHS" products are suitable for use in specified lead-free processes. TI may reference these types of products as "Pb-Free".
RoHS Exempt: TI defines "RoHS Exempt" to mean products that contain lead but are compliant with EU RoHS pursuant to a specific EU RoHS exemption.
Green: TI defines "Green" to mean the content of Chlorine (Cl) and Bromine (Br) based flame retardants meet JS709B low halogen requirements of <=1000ppm threshold. Antimony trioxide based flame retardants must also meet the <=1000ppm threshold requirement.

(3) MSL, Peak Temp. - The Moisture Sensitivity Level rating according to the JEDEC industry standard classifications, and peak solder temperature.

(4) There may be additional marking, which relates to the logo, the lot trace code information, or the environmental category on the device.

(5) Multiple Device Markings will be inside parentheses. Only one Device Marking contained in parentheses and separated by a "~" will appear on a device. If a line is indented then it is a continuation of the previous line and the two combined represent the entire Device Marking for that device.

(6) Lead finish/Ball material - Orderable Devices may have multiple material finish options. Finish options are separated by a vertical ruled line. Lead finish/Ball material values may wrap to two lines if the finish value exceeds the maximum column width.

Important Information and Disclaimer: The information provided on this page represents TI's knowledge and belief as of the date that it is provided. TI bases its knowledge and belief on information provided by third parties, and makes no representation or warranty as to the accuracy of such information. Efforts are underway to better integrate information from third parties. TI has taken and continues to take reasonable steps to provide representative and accurate information but may not have conducted destructive testing or chemical analysis on incoming materials and chemicals. TI and TI suppliers consider certain information to be proprietary, and thus CAS numbers and other limited information may not be available for release.

In no event shall TI's liability arising out of such information exceed the total purchase price of the TI part(s) at issue in this document sold by TI to Customer on an annual basis.

TAPE AND REEL INFORMATION

REEL DIMENSIONS

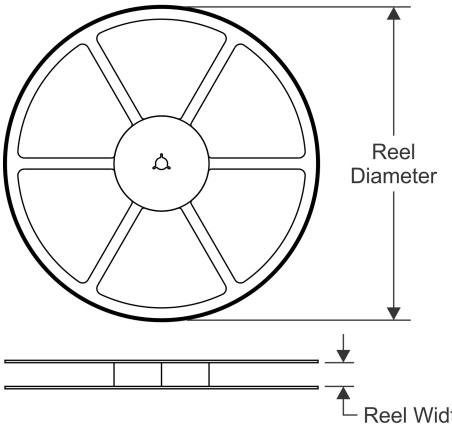

TAPE DIMENSIONS

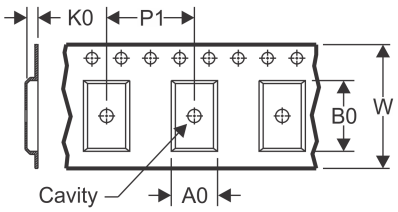

A0	Dimension designed to accommodate the component width
B0	Dimension designed to accommodate the component length
K0	Dimension designed to accommodate the component thickness
W	Overall width of the carrier tape
P1	Pitch between successive cavity centers

QUADRANT ASSIGNMENTS FOR PIN 1 ORIENTATION IN TAPE

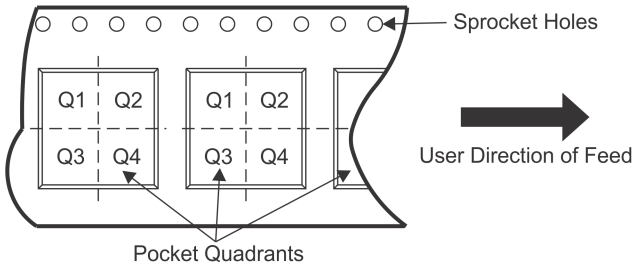

*All dimensions are nominal

Device	Package Type	Package Drawing	Pins	SPQ	Reel Diameter (mm)	Reel Width W1 (mm)	A0 (mm)	B0 (mm)	K0 (mm)	P1 (mm)	W (mm)	Pin1 Quadrant
DS32EV100SD/NOPB	WSON	NHK	14	1000	178.0	12.4	3.3	4.3	1.0	8.0	12.0	Q1

TAPE AND REEL BOX DIMENSIONS

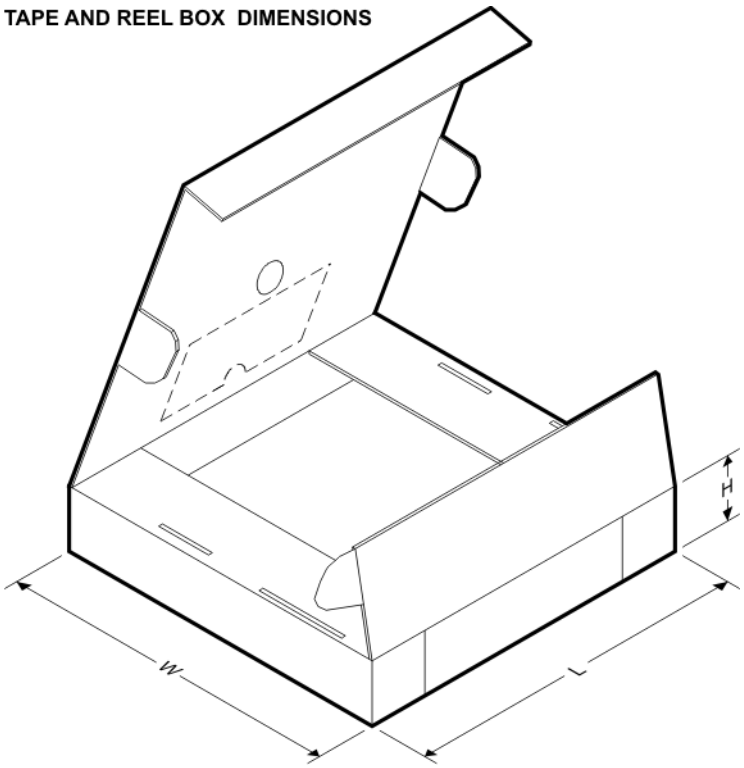

*All dimensions are nominal

Device	Package Type	Package Drawing	Pins	SPQ	Length (mm)	Width (mm)	Height (mm)
DS32EV100SD/NOPB	WSON	NHK	14	1000	210.0	185.0	35.0

NHK0014A

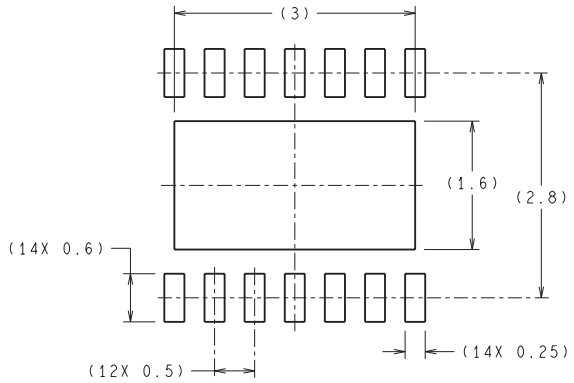

RECOMMENDED LAND PATTERN

DIMENSIONS ARE IN MILLIMETERS
DIMENSIONS IN ( ) FOR REFERENCE ONLY

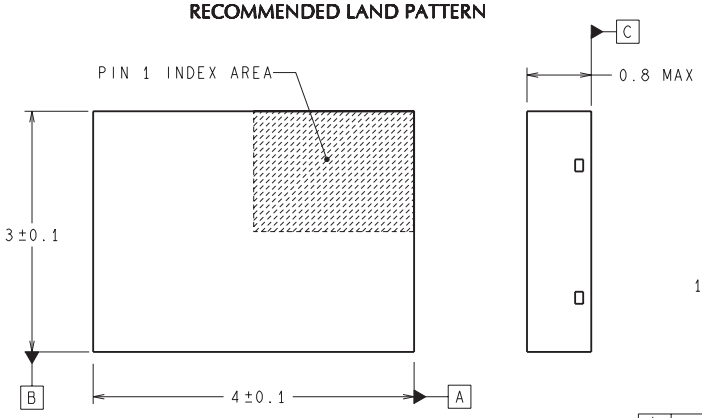

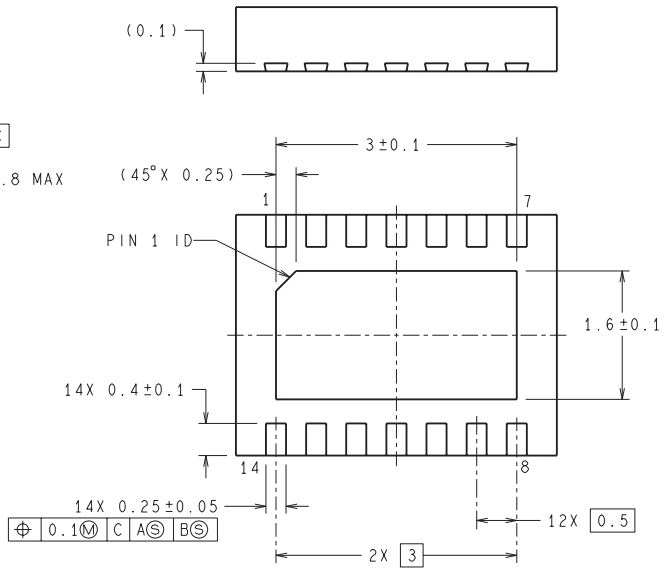

SDA14A (Rev A)

IMPORTANT NOTICE AND DISCLAIMER

TI PROVIDES TECHNICAL AND RELIABILITY DATA (INCLUDING DATASHEETS), DESIGN RESOURCES (INCLUDING REFERENCE DESIGNS), APPLICATION OR OTHER DESIGN ADVICE, WEB TOOLS, SAFETY INFORMATION, AND OTHER RESOURCES “AS IS” AND WITH ALL FAULTS, AND DISCLAIMS ALL WARRANTIES, EXPRESS AND IMPLIED, INCLUDING WITHOUT LIMITATION ANY IMPLIED WARRANTIES OF MERCHANTABILITY, FITNESS FOR A PARTICULAR PURPOSE OR NON-INFRINGEMENT OF THIRD PARTY INTELLECTUAL PROPERTY RIGHTS.

These resources are intended for skilled developers designing with TI products. You are solely responsible for (1) selecting the appropriate TI products for your application, (2) designing, validating and testing your application, and (3) ensuring your application meets applicable standards, and any other safety, security, or other requirements. These resources are subject to change without notice. TI grants you permission to use these resources only for development of an application that uses the TI products described in the resource. Other reproduction and display of these resources is prohibited. No license is granted to any other TI intellectual property right or to any third party intellectual property right. TI disclaims responsibility for, and you will fully indemnify TI and its representatives against, any claims, damages, costs, losses, and liabilities arising out of your use of these resources.

TI’s products are provided subject to TI’s Terms of Sale (www.ti.com/legal/termsofsale.html) or other applicable terms available either on ti.com or provided in conjunction with such TI products. TI’s provision of these resources does not expand or otherwise alter TI’s applicable warranties or warranty disclaimers for TI products.

Mailing Address: Texas Instruments, Post Office Box 655303, Dallas, Texas 75265
Copyright © 2020, Texas Instruments Incorporated