SN74AUP1G34 Low-Power Single Buffer Gate

1 Features

- Available in the Ultra Small 0.64 mm^2 Package (DPW) with 0.5-mm Pitch
- Low Static-Power Consumption; I_{CC} = 0.9 µA Max
- Low Dynamic-Power Consumption; C_{pd} = 4.1 pF Typ at 3.3 V
- Low Input Capacitance; C_i = 1.5 pF Typ
- Low Noise - Overshoot and Undershoot < 10% of V_{CC}
- I_{off} Supports Live Insertion, Partial Power Down Mode, and Back Drive Protection
- Input Hysteresis Allows Slow Input Transition and Better Switching Noise Immunity at the Input (V_{hys} = 250 mV Typ at 3.3 V)
- Wide Operating V_{CC} Range of 0.8 V to 3.6 V
- Optimized for 3.3-V Operation
- 3.6-V I/O Tolerant to Support Mixed-Mode Signal Operation
- t_{pd} = 4.1 ns Max at 3.3 V
- Suitable for Point-to-Point Applications
- Latch-Up Performance Exceeds 100 mA Per JESD 78, Class II
- ESD Performance Tested Per JESD 22
  - 2000-V Human-Body Model (A114-B, Class II)
  - 1000-V Charged-Device Model (C101)

2 Applications

- ATCA Solutions
- Active Noise Cancellation (ANC)
- Barcode Scanner
- Blood Pressure Monitor
- CPAP Machine
- Cable Solutions
- DLP 3D Machine Vision, Hyperspectral Imaging, Optical Networking, and Spectroscopy
- E-Book
- Embedded PC
- Field Transmitter: Temperature or Pressure Sensor
- Fingerprint Biometrics
- HVAC: Heating, Ventilating, and Air Conditioning
- Network-Attached Storage (NAS)
- Server Motherboard and PSU
- Software Defined Radio (SDR)
- TV: High-Definition (HDTV), LCD, and Digital
- Video Communications System
- Wireless Data Access Card, Headset, Keyboard, Mouse, and LAN Card
- X-ray: Baggage Scanner, Medical, and Dental

3 Description

This single buffer gate performs the Boolean function Y = A in positive logic.

Device Information(1)

PART NUMBER	PACKAGE	BODY SIZE (NOM)
SN74AUP1G34	SOT (5)	1.60 mm × 1.20 mm
	USON (6)	1.45 mm × 1.00 mm
	X2SON (4)	0.80 mm × 0.80 mm
	DSBGA (4)	0.79 mm × 0.79 mm

(1) For all available packages, see the orderable addendum at the end of the data sheet.

4 Simplifed Schematic

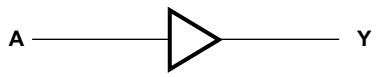

An IMPORTANT NOTICE at the end of this data sheet addresses availability, warranty, changes, use in safety-critical applications, intellectual property matters and other important disclaimers. PRODUCTION DATA.

Table of Contents

1 **Features** ... 1
2 **Applications** ... 1
3 **Description** ... 1
4 **Simplifed Schematic** ... 1
5 **Revision History** ... 2
6 **Pin Configuration and Function** ... 3
7 **Specifications** ... 3
7.1 Absolute Maximum Ratings ... 3
7.2 Handling Ratings ... 4
7.3 Recommended Operating Conditions ... 4
7.4 Thermal Information ... 4
7.5 Electrical Characteristics ... 5
7.6 Switching Characteristics, C_L = 5 pF ... 5
7.7 Switching Characteristics, C_L = 10 pF ... 6
7.8 Switching Characteristics, C_L = 15 pF ... 6
7.9 Switching Characteristics, C_L = 30 pF ... 6
7.10 Operating Characteristics ... 6
7.11 Typical Characteristics ... 7
8 **Parameter Measurement Information** ... 8
8.1 Propagation Delays, Setup and Hold Times, and Pulse Width ... 8
8.2 Enable and Disable Times ... 9
9 **Detailed Description** ... 10
9.1 Overview ... 10
9.2 Functional Block Diagram ... 10
9.3 Feature Description ... 10
9.4 Device Functional Modes ... 10
10 **Application and Implementation** ... 11
10.1 Application Information ... 11
10.2 Typical Application ... 11
11 **Power Supply Recommendations** ... 12
12 **Layout** ... 12
12.1 Layout Guidelines ... 12
12.2 Layout Example ... 12
13 **Device and Documentation Support** ... 13
13.1 Trademarks ... 13
13.2 Electrostatic Discharge Caution ... 13
13.3 Glossary ... 13
14 **Mechanical, Packaging, and Orderable Information** ... 13

5 Revision History

Changes from Revision J (June 2014) to Revision K	Page
• Updated Device Information table.	1

Changes from Revision I (November 2012) to Revision J	Page
• Updated document to new TI data sheet format.	1
• Deleted Ordering Information table.	1
• Updated Description.	1
• Added Device Information table.	1
• Added Handling Ratings table.	4
• Added Thermal Information table.	4
• Added Typical Characteristics.	7

Changes from Revision H (October 2012) to Revision I	Page
• Changed DPW package pinout	3

Copyright © 2004–2014, Texas Instruments Incorporated

6 Pin Configuration and Function

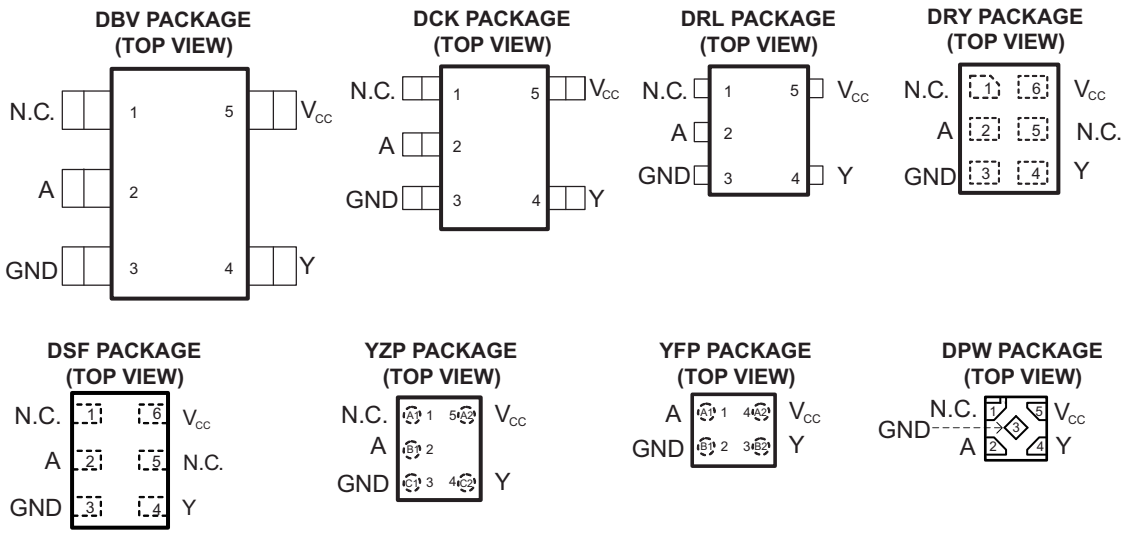

N.C. – No internal connection

See mechanical drawings for dimensions.

Pin Functions

PIN						I/O	DESCRIPTION
NAME	DBV, DCK, DRL	DSF, DRY	YFP	DPW	YFP		
NC	1	1, 5	–	1		–	No connect
A	2	2	A1	2	A1	I	Input A
GNY	3	3	B1	3	B1	–	Ground
Y	4	4	B2	4	B2	O	Output Y
V_{CC}	5	6	A2	5	A2	–	Power Pin

7 Specifications

7.1 Absolute Maximum Ratings(1)

over operating free-air temperature range (unless otherwise noted)

			MIN	MAX	UNIT
V_{CC}	Supply voltage range		–0.5	4.6	V
V_I	Input voltage range(2)		–0.5	4.6	V
V_O	Voltage range applied to any output in the high-impedance or power-off state(2)		–0.5	4.6	V
V_O	Output voltage range in the high or low state(2)		–0.5	V_{CC} + 0.5	V
I_{IK}	Input clamp current	$V_I < 0$		–50	mA
I_{OK}	Output clamp current	$V_O < 0$		–50	mA
I_O	Continuous output current			±20	mA
	Continuous current through V_{CC} or GND			±50	mA

(1) Stresses beyond those listed under *Absolute Maximum Ratings* may cause permanent damage to the device. These are stress ratings only, and functional operation of the device at these or any other conditions beyond those indicated under *Recommended Operating Conditions* is not implied. Exposure to absolute-maximum-rated conditions for extended periods may affect device reliability.

(2) The input and output negative-voltage ratings may be exceeded if the input and output current ratings are observed.

Copyright © 2004–2014, Texas Instruments Incorporated

7.2 Handling Ratings

			MIN	MAX	UNIT
T_{stg}	Storage temperature range		–65	150	°C
$V_{(ESD)}$	Electrostatic discharge	Human body model (HBM), per ANSI/ESDA/JEDEC JS-001, all pins(1)	0	2000	V
		Charged device model (CDM), per JEDEC specification JESD22-C101, all pins(2)	0	1000	

(1) JEDEC document JEP155 states that 500-V HBM allows safe manufacturing with a standard ESD control process.
(2) JEDEC document JEP157 states that 250-V CDM allows safe manufacturing with a standard ESD control process.

7.3 Recommended Operating Conditions(1)

			MIN	MAX	UNIT
V_{CC}	Supply voltage		0.8	3.6	V
V_{IH}	High-level input voltage	V_{CC} = 0.8 V	V_{CC}		V
		V_{CC} = 1.1 V to 1.95 V	0.65 × V_{CC}		
		V_{CC} = 2.3 V to 2.7 V	1.6		
		V_{CC} = 3 V to 3.6 V	2		
V_{IL}	Low-level input voltage	V_{CC} = 0.8 V		0	V
		V_{CC} = 1.1 V to 1.95 V		0.35 × V_{CC}	
		V_{CC} = 2.3 V to 2.7 V		0.7	
		V_{CC} = 3 V to 3.6 V		0.9	
V_I	Input voltage		0	3.6	V
V_O	Output voltage		0	V_{CC}	V
I_{OH} (2)	High-level output current	V_{CC} = 0.8 V		–20	µA
		V_{CC} = 1.1 V		–1.1	mA
		V_{CC} = 1.4 V		–1.7	
		V_{CC} = 1.65 V		–1.9	
		V_{CC} = 2.3 V		–3.1	
		V_{CC} = 3 V		-4	
I_{OL} (2)	Low-level output current	V_{CC} = 0.8 V		20	µA
		V_{CC} = 1.1 V		1.1	mA
		V_{CC} = 1.4 V		1.7	
		V_{CC} = 1.65 V		1.9	
		V_{CC} = 2.3 V		3.1	
		V_{CC} = 3 V		4	
Δt/Δv	Input transition rise or fall rate	V_{CC} = 0.8 V to 3.6 V		200	ns/V
T_A	Operating free-air temperature		–40	85	°C

(1) All unused inputs of the device must be held at V_{CC} or GND to ensure proper device operation. Refer to the TI application report, *Implications of Slow or Floating CMOS Inputs,* literature number SCBA004.
(2) Defined by the signal integrity requirements and design goal priorities

7.4 Thermal Information

THERMAL METRIC(1)		DBV	DCK	DRL	DSF	DRY	UNIT
		5 PINS	5 PINS	5 PINS	6 PINS	6 PINS	
$R_{θJA}$	Junction-to-ambient thermal resistance	271.4	338.4	349.7	407.1	554.9	°C/W
$R_{θJC(top)}$	Junction-to-case (top) thermal resistance	213.5	110.6	120.5	232.0	385.4	
$R_{θJB}$	Junction-to-board thermal resistance	108.2	118.8	171.4	306.9	388.2	
$ψ_{JT}$	Junction-to-top characterization parameter	89.3	3.0	10.8	40.3	159.0	
$ψ_{JB}$	Junction-to-board characterization parameter	107.6	117.8	169.4	306.0	384.1	

(1) For more information about traditional and new thermal metrics, see the *IC Package Thermal Metrics* application report, SPRA953.

Copyright © 2004–2014, Texas Instruments Incorporated

7.5 Electrical Characteristics

over recommended operating free-air temperature range (unless otherwise noted)

PARAMETER	TEST CONDITIONS		V_{CC}	T_A = 25°C			T_A = –40°C to 85°C		UNIT
				MIN	TYP	MAX	MIN	MAX	
V_{OH}	I_{OH} = –20 µA		0.8 V to 3.6 V	V_{CC} – 0.1			V_{CC} – 0.1		V
	I_{OH} = –1.1 mA		1.1 V	0.75 × V_{CC}			0.7 × V_{CC}		
	I_{OH} = –1.7 mA		1.4 V	1.11			1.03		
	I_{OH} = –1.9 mA		1.65 V	1.32			1.3		
	I_{OH} = –2.3 mA		2.3 V	2.05			1.97		
	I_{OH} = –3.1 mA			1.9			1.85		
	I_{OH} = –2.7 mA		3 V	2.72			2.67		
	I_{OH} = –4 mA			2.6			2.55		
V_{OL}	I_{OL} = 20 µA		0.8 V to 3.6 V			0.1		0.1	V
	I_{OL} = 1.1 mA		1.1 V			0.3 × V_{CC}		0.3 × V_{CC}	
	I_{OL} = 1.7 mA		1.4 V			0.31		0.37	
	I_{OL} = 1.9 mA		1.65 V			0.31		0.35	
	I_{OL} = 2.3 mA		2.3 V			0.31		0.33	
	I_{OL} = 3.1 mA					0.44		0.45	
	I_{OL} = 2.7 mA		3 V			0.31		0.33	
	I_{OL} = 4 mA					0.44		0.45	
I_I A input	V_I = GND to 3.6 V		0 V to 3.6 V			0.1		0.5	µA
I_{off}	V_I or V_O = 0 V to 3.6 V		0 V			0.2		0.6	µA
ΔI_{off}	V_I or V_O = 0 V to 3.6 V		0 V to 0.2 V			0.2		0.6	µA
I_{CC}	V_I = GND or (V_{CC} to 3.6 V)	I_O = 0	0.8 V to 3.6 V			0.5		0.9	µA
ΔI_{CC}	V_I = V_{CC} – 0.6 V	I_O = 0	3.3 V			40		50	µA
C_i	V_I = V_{CC} or GND		0 V		1.5				pF
			3.6 V		1.5				
C_o	V_O = GND		0 V		2.5				pF

7.6 Switching Characteristics, C_L = 5 pF

over recommended operating free-air temperature range (unless otherwise noted) (see Figure 3 and Figure 4)

PARAMETER	FROM (INPUT)	TO (OUTPUT)	V_{CC}	T_A = 25°C			T_A = –40°C to 85°C		UNIT
				MIN	TYP	MAX	MIN	MAX	
t_{pd}	A	Y	0.8 V	1.8	14.5	27.4			ns
			1.2 V ± 0.1 V	3	5.6	11.2	0.4	13.9	
			1.5 V ± 0.1 V	2.5	4	7.2	0.7	9.2	
			1.8 V ± 0.15 V	2.2	3.2	6	0.8	7.3	
			2.5 V ± 0.2 V	1.8	2.4	3.9	0.6	5.1	
			3.3 V ± 0.3 V	1.4	2	3.2	0.6	4.1	

Copyright © 2004–2014, Texas Instruments Incorporated

7.7 Switching Characteristics, C_L = 10 pF

over recommended operating free-air temperature range (unless otherwise noted) (see Figure 3 and Figure 4

PARAMETER	FROM (INPUT)	TO (OUTPUT)	V_{CC}	T_A = 25°C			T_A = –40°C to 85°C		UNIT
				MIN	TYP	MAX	MIN	MAX	
t_{pd}	A	Y	0.8 V	2.7	16.6	28.2			ns
			1.2 V ± 0.1 V	3.6	6.6	12.7	0.3	15.4	
			1.5 V ± 0.1 V	3	4.8	8.3	1.2	10.3	
			1.8 V ± 0.15 V	2.7	3.9	6.9	1.3	8.3	
			2.5 V ± 0.2 V	2.3	2.9	4.5	1.2	5.8	
			3.3 V ± 0.3 V	2	2.4	3.8	1.1	4.8	

7.8 Switching Characteristics, C_L = 15 pF

over recommended operating free-air temperature range (unless otherwise noted) (see Figure 3 and Figure 4

PARAMETER	FROM (INPUT)	TO (OUTPUT)	V_{CC}	T_A = 25°C			T_A = –40°C to 85°C		UNIT
				MIN	TYP	MAX	MIN	MAX	
t_{pd}	A	Y	0.8 V	5.1	18.6	30.2			ns
			1.2 V ± 0.1 V	4.3	7.5	13.6	1.3	16.5	
			1.5 V ± 0.1 V	3.6	5.5	9	1.9	11.2	
			1.8 V ± 0.15 V	3.2	4.5	7.5	1.9	8.9	
			2.5 V ± 0.2 V	2.6	3.4	5.2	1.7	6.5	
			3.3 V ± 0.3 V	2.3	2.9	4.2	1.5	5	

7.9 Switching Characteristics, C_L = 30 pF

over recommended operating free-air temperature range (unless otherwise noted) (see Figure 3 and Figure 4

PARAMETER	FROM (INPUT)	TO (OUTPUT)	V_{CC}	T_A = 25°C			T_A = –40°C to 85°C		UNIT
				MIN	TYP	MAX	MIN	MAX	
t_{pd}	A	Y	0.8 V	9.9	24.2	36.3			ns
			1.2 V ± 0.1 V	6.3	10.1	16.3	3.6	18.9	
			1.5 V ± 0.1 V	5.1	7.4	11	3.4	13	
			1.8 V ± 0.15 V	4.5	6.1	9.3	3.2	10.6	
			2.5 V ± 0.2 V	3.7	4.7	6.4	2.7	7.8	
			3.3 V ± 0.3 V	3.3	4	5.3	2.5	6.5	

7.10 Operating Characteristics

T_A = 25°C

PARAMETER		TEST CONDITIONS	V_{CC}	TYP	UNIT
C_{pd}	Power dissipation capacitance	f = 10 MHz	0.8 V	3.8	pF
			1.2 V ± 0.1 V	3.8	
			1.5 V ± 0.1 V	3.8	
			1.8 V ± 0.15 V	3.8	
			2.5 V ± 0.2 V	3.9	
			3.3 V ± 0.3 V	4.1	

Copyright © 2004–2014, Texas Instruments Incorporated

7.11 Typical Characteristics

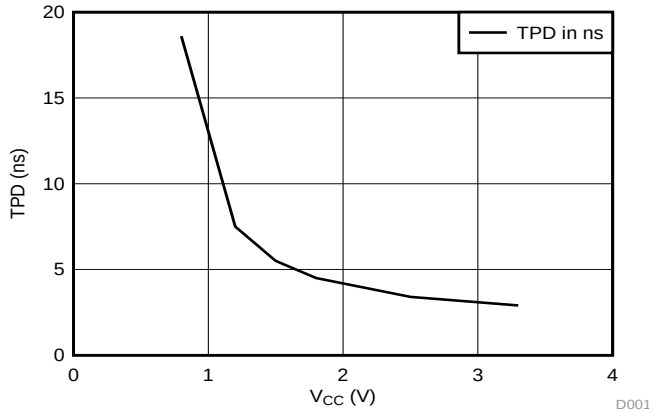

Figure 1. TPD vs V_{CC} 15 pF Load

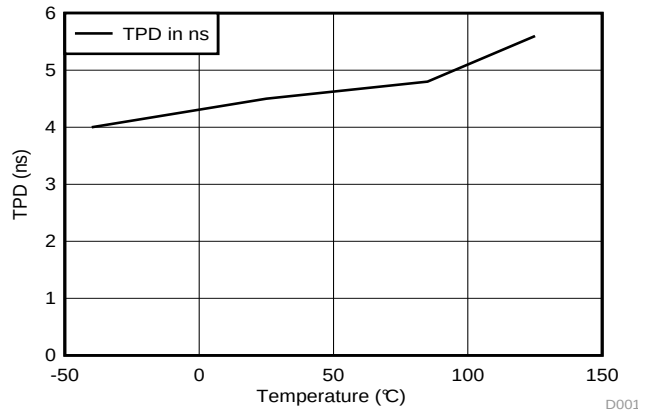

Figure 2. TPD vs Temperature 15 pF Load

8 Parameter Measurement Information

8.1 Propagation Delays, Setup and Hold Times, and Pulse Width

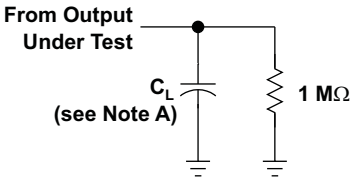

LOAD CIRCUIT

	V_{CC} = 0.8 V	V_{CC} = 1.2 V ± 0.1 V	V_{CC} = 1.5 V ± 0.1 V	V_{CC} = 1.8 V ± 0.15 V	V_{CC} = 2.5 V ± 0.2 V	V_{CC} = 3.3 V ± 0.3 V
C_L V_M V_I	5, 10, 15, 30 pF $V_{CC}/2$ V_{CC}	5, 10, 15, 30 pF $V_{CC}/2$ V_{CC}	5, 10, 15, 30 pF $V_{CC}/2$ V_{CC}	5, 10, 15, 30 pF $V_{CC}/2$ V_{CC}	5, 10, 15, 30 pF $V_{CC}/2$ V_{CC}	5, 10, 15, 30 pF $V_{CC}/2$ V_{CC}

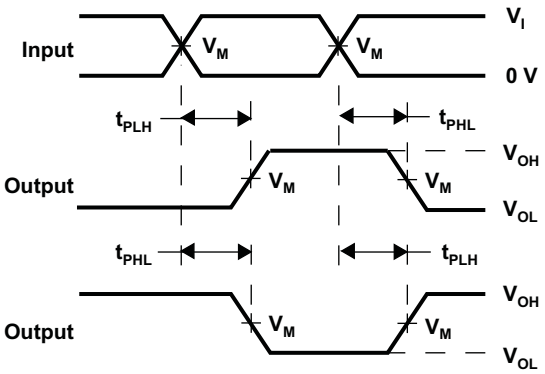

VOLTAGE WAVEFORMS
PROPAGATION DELAY TIMES
INVERTING AND NONINVERTING OUTPUTS

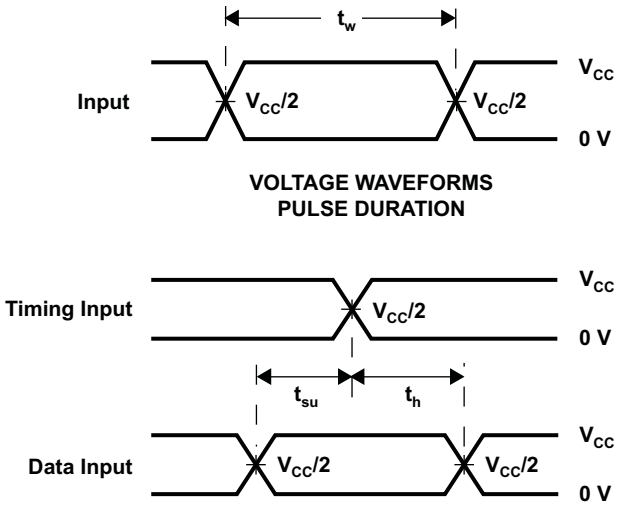

VOLTAGE WAVEFORMS
PULSE DURATION

VOLTAGE WAVEFORMS
SETUP AND HOLD TIMES

NOTES: A. C_L includes probe and jig capacitance.
B. All input pulses are supplied by generators having the following characteristics: PRR ≤ 10 Mhz, Z_O = 50 Ω, t_r/t_f = 3 ns.
C. The outputs are measured one at a time, with one transition per measurement.
D. t_{PLH} and t_{PHL} are the same as t_{pd}.
E. All parameters and waveforms are not applicable to all devices.

Figure 3. Load Circuit and Voltage Waveforms

Copyright © 2004–2014, Texas Instruments Incorporated

8.2 Enable and Disable Times

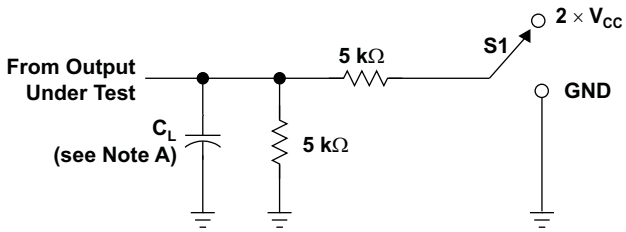

LOAD CIRCUIT

TEST	S1
t_{PLZ}/t_{PZL} t_{PHZ}/t_{PZH}	2 × V_{CC} GND

	V_{CC} = 0.8 V	V_{CC} = 1.2 V ± 0.1 V	V_{CC} = 1.5 V ± 0.1 V	V_{CC} = 1.8 V ± 0.15 V	V_{CC} = 2.5 V ± 0.2 V	V_{CC} = 3.3 V ± 0.3 V
C_L V_M V_I V_Δ	5, 10, 15, 30 pF $V_{CC}/2$ V_{CC} 0.1 V	5, 10, 15, 30 pF $V_{CC}/2$ V_{CC} 0.1 V	5, 10, 15, 30 pF $V_{CC}/2$ V_{CC} 0.1 V	5, 10, 15, 30 pF $V_{CC}/2$ V_{CC} 0.15 V	5, 10, 15, 30 pF $V_{CC}/2$ V_{CC} 0.15 V	5, 10, 15, 30 pF $V_{CC}/2$ V_{CC} 0.3 V

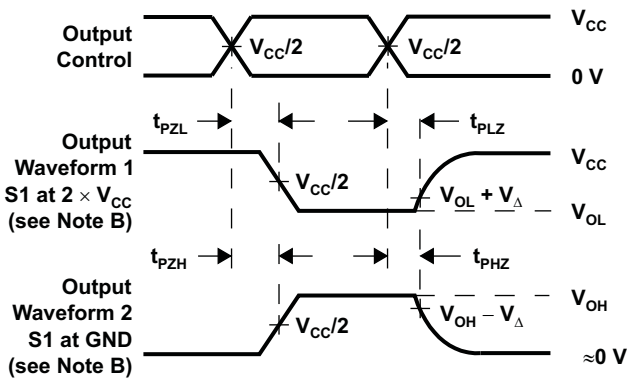

VOLTAGE WAVEFORMS
ENABLE AND DISABLE TIMES
LOW- AND HIGH-LEVEL ENABLING

NOTES: A. CL includes probe and jig capacitance.
B. Waveform 1 is for an output with internal conditions such that the output is low, except when disabled by the output control. Waveform 2 is for an output with internal conditions such that the output is high, except when disabled by the output control.
C. All input pulses are supplied by generators having the following characteristics: PRR ≤ 10 MHz, Z_O = 50 Ω, t_r/t_f = 3 ns.
D. The outputs are measured one at a time, with one transition per measurement.
E. t_{PLZ} and t_{PHZ} are the same as t_{dis}.
F. t_{PZL} and t_{PZH} are the same as t_{en}.
G. All parameters and waveforms are not applicable to all devices.

Figure 4. Load Circuit and Voltage Waveforms

9 Detailed Description

9.1 Overview

This single buffer gate operates from 0.8 V to 3.6 V and performs the Boolean function Y = A in positive logic. The AUP family of devices has quiescent power consumption less than 1 µA and comes in the ultra small DPW package. The DPW package technology is a major breakthrough in IC packaging. Its tiny 0.64 mm square footprint saves significant board space over other package options while still retaining the traditional manufacturing friendly lead pitch of 0.5 mm.

This device is fully specified for partial-power-down applications using I_{off}. The I_{off} circuitry disables the outputs, preventing damaging current back-flow through the device when it is powered. The I_{off} feature also allows for live insertion.

9.2 Functional Block Diagram

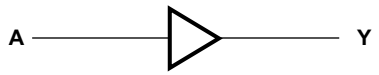

9.3 Feature Description

- Wide operating V_{CC} range of 0.8 V to 3.6 V
- 3.6-V I/O tolerant to support down translation
- Input hysteresis allows slow input transition and better switching noise immunity at the input
- I_{off} feature allows voltages on the inputs and outputs when V_{CC} is 0 V
- Low noise due to slower edge rates

9.4 Device Functional Modes

Table 1. Function Table

INPUT A	OUTPUT Y
H	H
L	L

Copyright © 2004–2014, Texas Instruments Incorporated

10 Application and Implementation

10.1 Application Information

The AUP family is TI's premier solution to the industry's low-power needs in battery-powered portable applications. This family ensures a very low static and dynamic power consumption across the entire V_{CC} range of 0.8 V to 3.6 V, resulting in an increased battery life. This product also maintains excellent signal integrity. It has a small amount of hysteresis built in allowing for slower or noisy input signals. The lowered drive produces slower edges and prevents overshoot and undershoot on the outputs.

The AUP family of single gate logic makes excellent translators for the new lower voltage Micro- processors that typically are powered from 0.8 V to 1.2 V. They can drop the voltage of peripheral drivers and accessories that are still powered by 3.3 V to the new uC power levels.

10.2 Typical Application

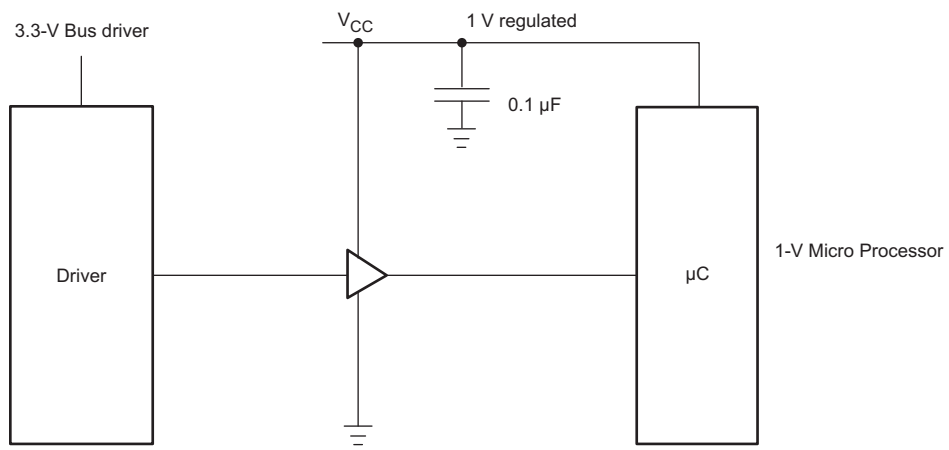

Figure 5. Typical Application

10.2.1 Design Requirements

This device uses CMOS technology and has balanced output drive. Care should be taken to avoid bus contention because it can drive currents that would exceed maximum limits.

10.2.2 Detailed Design Procedure

1. Recommended Input conditions
   - Rise time and fall time specifications. See (Δt/ΔV) in *Recommended Operating Conditions* table.
   - Specified high and low levels. See (V_{IH} and V_{IL}) in *Recommended Operating Conditions* table.
   - Inputs are overvoltage tolerant allowing them to go as high as 3.6 V at any valid V_{CC}
2. Recommend output conditions
   - Load currents should not exceed 20 mA on the output and 50 mA total for the part
   - Outputs should not be pulled above V_{CC}

Typical Application (continued)

10.2.3 Application Curves

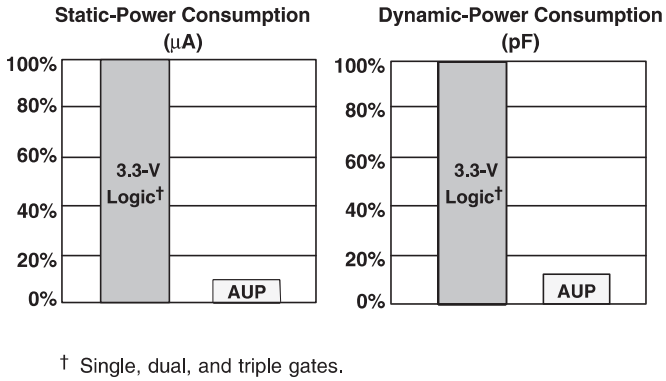

Figure 6. AUP – The Lowest-Power Family

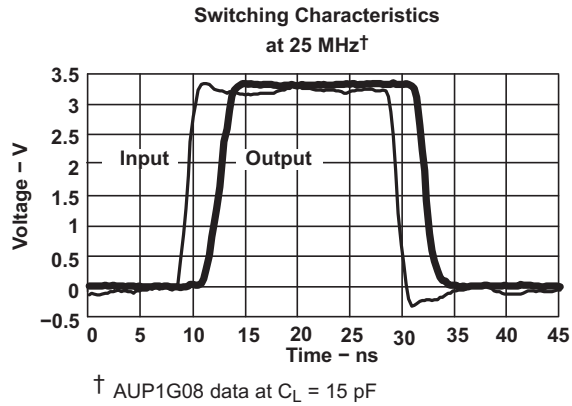

Figure 7. Excellent Signal Integrity

11 Power Supply Recommendations

The power supply can be any voltage between the Min and Max supply voltage rating located in the *Recommended Operating Conditions* table.

Each V_{CC} terminal should have a good bypass capacitor to prevent power disturbance. For devices with a single supply, 0.1 μF is recommended and if there are multiple V_{CC} terminals then .01 μF or .022 μF is recommended for each power terminal. It is ok to parallel multiple bypass caps to reject different frequencies of noise. A 0.1 μF and 1 μF are commonly used in parallel. The bypass capacitor should be installed as close to the power terminal as possible for best results.

12 Layout

12.1 Layout Guidelines

When using multiple bit logic devices inputs should not ever float.

In many cases, functions or parts of functions of digital logic devices are unused, for example, when only two inputs of a triple-input AND gate are used or only 3 of the 4 buffer gates are used. Such input pins should not be left unconnected because the undefined voltages at the outside connections result in undefined operational states. Specified below are the rules that must be observed under all circumstances. All unused inputs of digital logic devices must be connected to a high or low bias to prevent them from floating. The logic level that should be applied to any particular unused input depends on the function of the device. Generally they will be tied to GND or V_{CC} whichever make more sense or is more convenient. It is generally OK to float outputs unless the part is a transceiver. If the transceiver has an output enable pin it will disable the outputs section of the part when asserted. This will not disable the input section of the I.O's so they also cannot float when disabled.

12.2 Layout Example

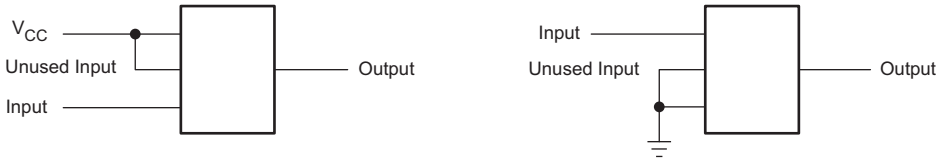

Copyright © 2004–2014, Texas Instruments Incorporated

13 Device and Documentation Support

13.1 Trademarks

All trademarks are the property of their respective owners.

13.2 Electrostatic Discharge Caution

These devices have limited built-in ESD protection. The leads should be shorted together or the device placed in conductive foam during storage or handling to prevent electrostatic damage to the MOS gates.

13.3 Glossary

SLYZ022 — *TI Glossary*.

This glossary lists and explains terms, acronyms, and definitions.

14 Mechanical, Packaging, and Orderable Information

The following pages include mechanical, packaging, and orderable information. This information is the most current data available for the designated devices. This data is subject to change without notice and revision of this document. For browser-based versions of this data sheet, refer to the left-hand navigation.

PACKAGING INFORMATION

Orderable Device	Status (1)	Package Type	Package Drawing	Pins	Package Qty	Eco Plan (2)	Lead finish/ Ball material (6)	MSL Peak Temp (3)	Op Temp (°C)	Device Marking (4/5)	Samples
SN74AUP1G34DBVR	ACTIVE	SOT-23	DBV	5	3000	RoHS & Green	NIPDAU	Level-1-260C-UNLIM	-40 to 85	H34R	Samples
SN74AUP1G34DBVT	ACTIVE	SOT-23	DBV	5	250	RoHS & Green	NIPDAU	Level-1-260C-UNLIM	-40 to 85	H34R	Samples
SN74AUP1G34DCKR	ACTIVE	SC70	DCK	5	3000	RoHS & Green	NIPDAU	Level-1-260C-UNLIM	-40 to 85	(H95, H9F, H9K, H9 R)	Samples
SN74AUP1G34DCKT	ACTIVE	SC70	DCK	5	250	RoHS & Green	NIPDAU	Level-1-260C-UNLIM	-40 to 85	(H95, H9R)	Samples
SN74AUP1G34DPWR	ACTIVE	X2SON	DPW	5	3000	RoHS & Green	NIPDAU	Level-1-260C-UNLIM	-40 to 85	G4	Samples
SN74AUP1G34DRLR	ACTIVE	SOT-5X3	DRL	5	4000	RoHS & Green	NIPDAU | NIPDAUAG	Level-1-260C-UNLIM	-40 to 85	(H97, H9R)	Samples
SN74AUP1G34DRYR	ACTIVE	SON	DRY	6	5000	RoHS & Green	NIPDAU | NIPDAUAG	Level-1-260C-UNLIM	-40 to 85	H9	Samples
SN74AUP1G34DSFR	ACTIVE	SON	DSF	6	5000	RoHS & Green	NIPDAU | NIPDAUAG	Level-1-260C-UNLIM		H9	Samples
SN74AUP1G34YFPR	ACTIVE	DSBGA	YFP	4	3000	RoHS & Green	SNAGCU	Level-1-260C-UNLIM		H9 N	Samples
SN74AUP1G34YZPR	ACTIVE	DSBGA	YZP	5	3000	RoHS & Green	SNAGCU	Level-1-260C-UNLIM	-40 to 85	H9N	Samples

(1) The marketing status values are defined as follows:
ACTIVE: Product device recommended for new designs.
LIFEBUY: TI has announced that the device will be discontinued, and a lifetime-buy period is in effect.
NRND: Not recommended for new designs. Device is in production to support existing customers, but TI does not recommend using this part in a new design.
PREVIEW: Device has been announced but is not in production. Samples may or may not be available.
OBSOLETE: TI has discontinued the production of the device.

(2) **RoHS:** TI defines "RoHS" to mean semiconductor products that are compliant with the current EU RoHS requirements for all 10 RoHS substances, including the requirement that RoHS substance do not exceed 0.1% by weight in homogeneous materials. Where designed to be soldered at high temperatures, "RoHS" products are suitable for use in specified lead-free processes. TI may reference these types of products as "Pb-Free".
RoHS Exempt: TI defines "RoHS Exempt" to mean products that contain lead but are compliant with EU RoHS pursuant to a specific EU RoHS exemption.
Green: TI defines "Green" to mean the content of Chlorine (Cl) and Bromine (Br) based flame retardants meet JS709B low halogen requirements of <=1000ppm threshold. Antimony trioxide based flame retardants must also meet the <=1000ppm threshold requirement.

(3) MSL, Peak Temp. - The Moisture Sensitivity Level rating according to the JEDEC industry standard classifications, and peak solder temperature.

(4) There may be additional marking, which relates to the logo, the lot trace code information, or the environmental category on the device.

(5) Multiple Device Markings will be inside parentheses. Only one Device Marking contained in parentheses and separated by a "~" will appear on a device. If a line is indented then it is a continuation of the previous line and the two combined represent the entire Device Marking for that device.

(6) Lead finish/Ball material - Orderable Devices may have multiple material finish options. Finish options are separated by a vertical ruled line. Lead finish/Ball material values may wrap to two lines if the finish value exceeds the maximum column width.

Important Information and Disclaimer: The information provided on this page represents TI's knowledge and belief as of the date that it is provided. TI bases its knowledge and belief on information provided by third parties, and makes no representation or warranty as to the accuracy of such information. Efforts are underway to better integrate information from third parties. TI has taken and continues to take reasonable steps to provide representative and accurate information but may not have conducted destructive testing or chemical analysis on incoming materials and chemicals. TI and TI suppliers consider certain information to be proprietary, and thus CAS numbers and other limited information may not be available for release.

In no event shall TI's liability arising out of such information exceed the total purchase price of the TI part(s) at issue in this document sold by TI to Customer on an annual basis.

TAPE AND REEL INFORMATION

REEL DIMENSIONS

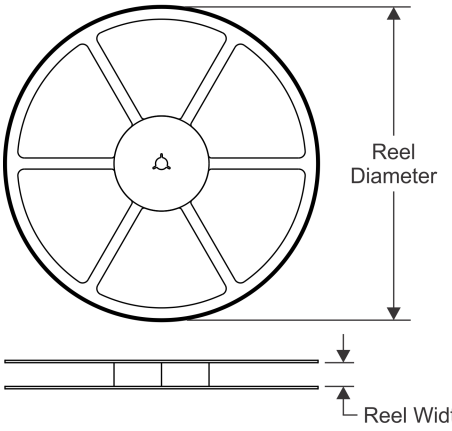

TAPE DIMENSIONS

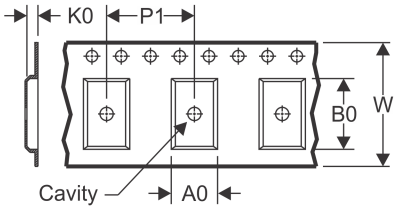

A0	Dimension designed to accommodate the component width
B0	Dimension designed to accommodate the component length
K0	Dimension designed to accommodate the component thickness
W	Overall width of the carrier tape
P1	Pitch between successive cavity centers

QUADRANT ASSIGNMENTS FOR PIN 1 ORIENTATION IN TAPE

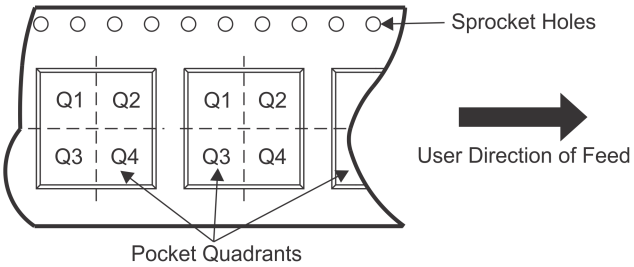

*All dimensions are nominal

Device	Package Type	Package Drawing	Pins	SPQ	Reel Diameter (mm)	Reel Width W1 (mm)	A0 (mm)	B0 (mm)	K0 (mm)	P1 (mm)	W (mm)	Pin1 Quadrant
SN74AUP1G34DBVR	SOT-23	DBV	5	3000	180.0	8.4	3.23	3.17	1.37	4.0	8.0	Q3
SN74AUP1G34DBVT	SOT-23	DBV	5	250	180.0	8.4	3.23	3.17	1.37	4.0	8.0	Q3
SN74AUP1G34DCKR	SC70	DCK	5	3000	180.0	8.4	2.47	2.3	1.25	4.0	8.0	Q3
SN74AUP1G34DCKR	SC70	DCK	5	3000	178.0	9.2	2.4	2.4	1.22	4.0	8.0	Q3
SN74AUP1G34DCKT	SC70	DCK	5	250	178.0	9.2	2.4	2.4	1.22	4.0	8.0	Q3
SN74AUP1G34DPWR	X2SON	DPW	5	3000	178.0	8.4	0.91	0.91	0.5	2.0	8.0	Q3
SN74AUP1G34DRLR	SOT-5X3	DRL	5	4000	180.0	8.4	1.98	1.78	0.69	4.0	8.0	Q3
SN74AUP1G34DRLR	SOT-5X3	DRL	5	4000	180.0	9.5	1.78	1.78	0.69	4.0	8.0	Q3
SN74AUP1G34DRYR	SON	DRY	6	5000	180.0	9.5	1.15	1.6	0.75	4.0	8.0	Q1
SN74AUP1G34DSFR	SON	DSF	6	5000	180.0	9.5	1.16	1.16	0.5	4.0	8.0	Q2
SN74AUP1G34YFPR	DSBGA	YFP	4	3000	178.0	9.2	0.89	0.89	0.58	4.0	8.0	Q1
SN74AUP1G34YZPR	DSBGA	YZP	5	3000	178.0	9.2	1.02	1.52	0.63	4.0	8.0	Q1

TAPE AND REEL BOX DIMENSIONS

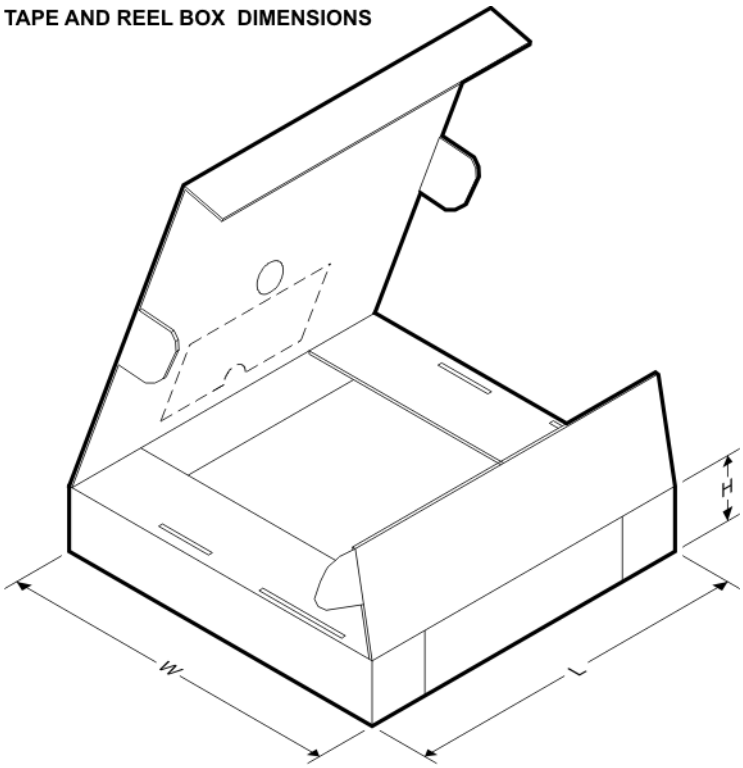

*All dimensions are nominal

Device	Package Type	Package Drawing	Pins	SPQ	Length (mm)	Width (mm)	Height (mm)
SN74AUP1G34DBVR	SOT-23	DBV	5	3000	202.0	201.0	28.0
SN74AUP1G34DBVT	SOT-23	DBV	5	250	202.0	201.0	28.0
SN74AUP1G34DCKR	SC70	DCK	5	3000	202.0	201.0	28.0
SN74AUP1G34DCKR	SC70	DCK	5	3000	180.0	180.0	18.0
SN74AUP1G34DCKT	SC70	DCK	5	250	180.0	180.0	18.0
SN74AUP1G34DPWR	X2SON	DPW	5	3000	205.0	200.0	33.0
SN74AUP1G34DRLR	SOT-5X3	DRL	5	4000	202.0	201.0	28.0
SN74AUP1G34DRLR	SOT-5X3	DRL	5	4000	184.0	184.0	19.0
SN74AUP1G34DRYR	SON	DRY	6	5000	184.0	184.0	19.0
SN74AUP1G34DSFR	SON	DSF	6	5000	184.0	184.0	19.0
SN74AUP1G34YFPR	DSBGA	YFP	4	3000	220.0	220.0	35.0
SN74AUP1G34YZPR	DSBGA	YZP	5	3000	220.0	220.0	35.0

DCK (R–PDSO–G5) PLASTIC SMALL–OUTLINE PACKAGE

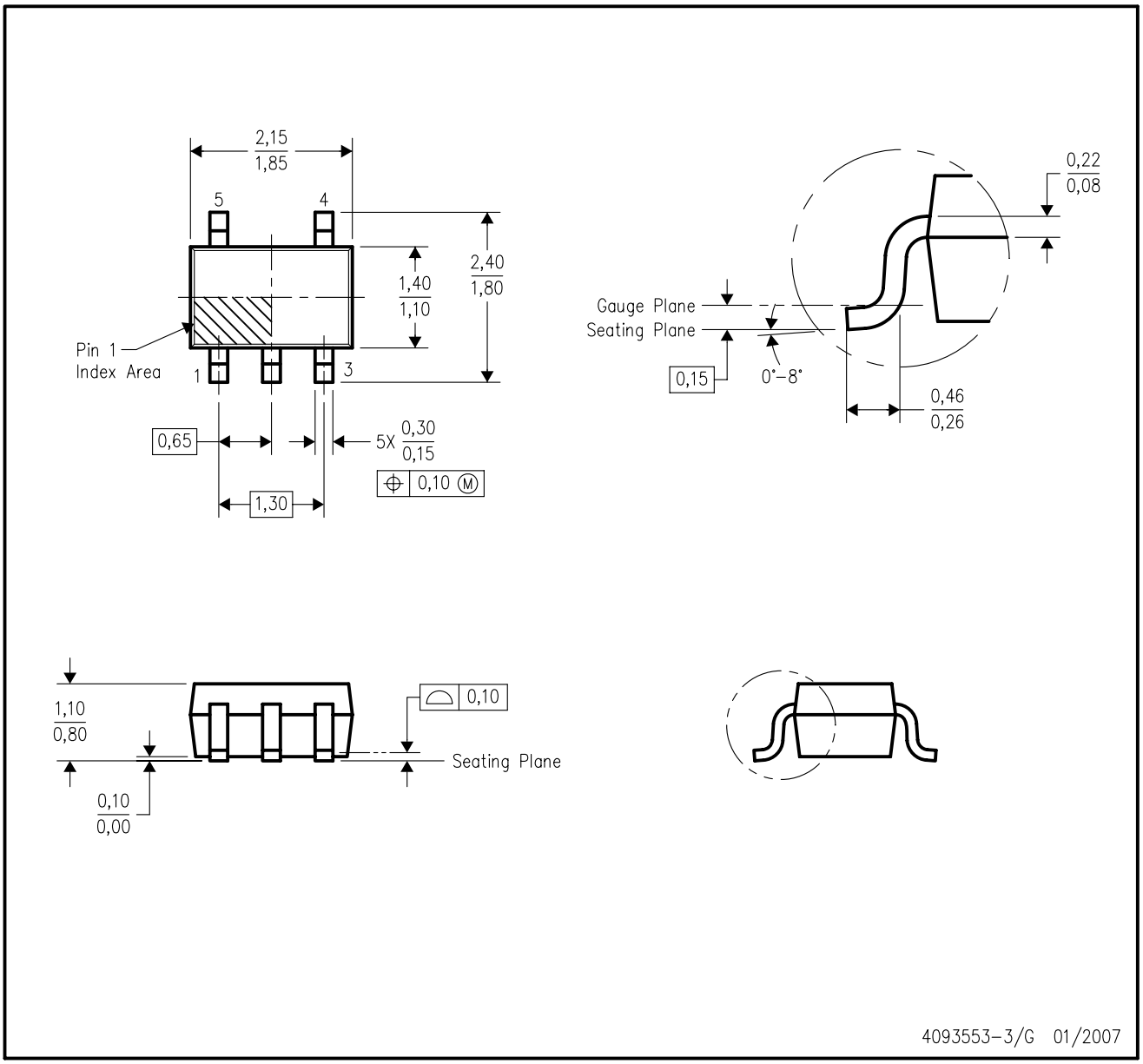

NOTES:
A. All linear dimensions are in millimeters.
B. This drawing is subject to change without notice.
C. Body dimensions do not include mold flash or protrusion. Mold flash and protrusion shall not exceed 0.15 per side.
D. Falls within JEDEC MO–203 variation AA.

DCK (R-PDSO-G5) PLASTIC SMALL OUTLINE

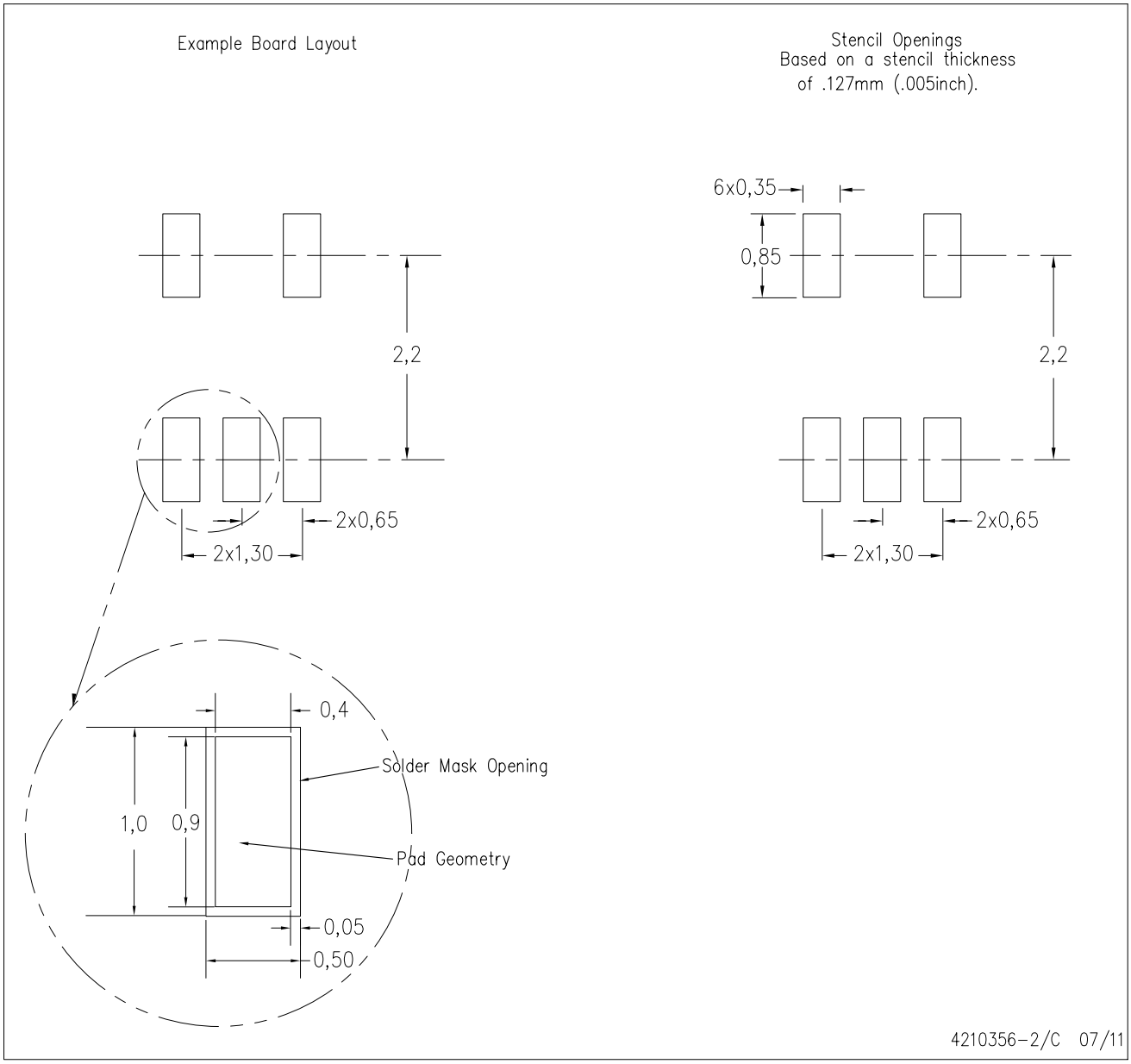

NOTES:
A. All linear dimensions are in millimeters.
B. This drawing is subject to change without notice.
C. Customers should place a note on the circuit board fabrication drawing not to alter the center solder mask defined pad.
D. Publication IPC-7351 is recommended for alternate designs.
E. Laser cutting apertures with trapezoidal walls and also rounding corners will offer better paste release. Customers should contact their board assembly site for stencil design recommendations. Example stencil design based on a 50% volumetric metal load solder paste. Refer to IPC-7525 for other stencil recommendations.

Images above are just a representation of the package family, actual package may vary.
Refer to the product data sheet for package details.

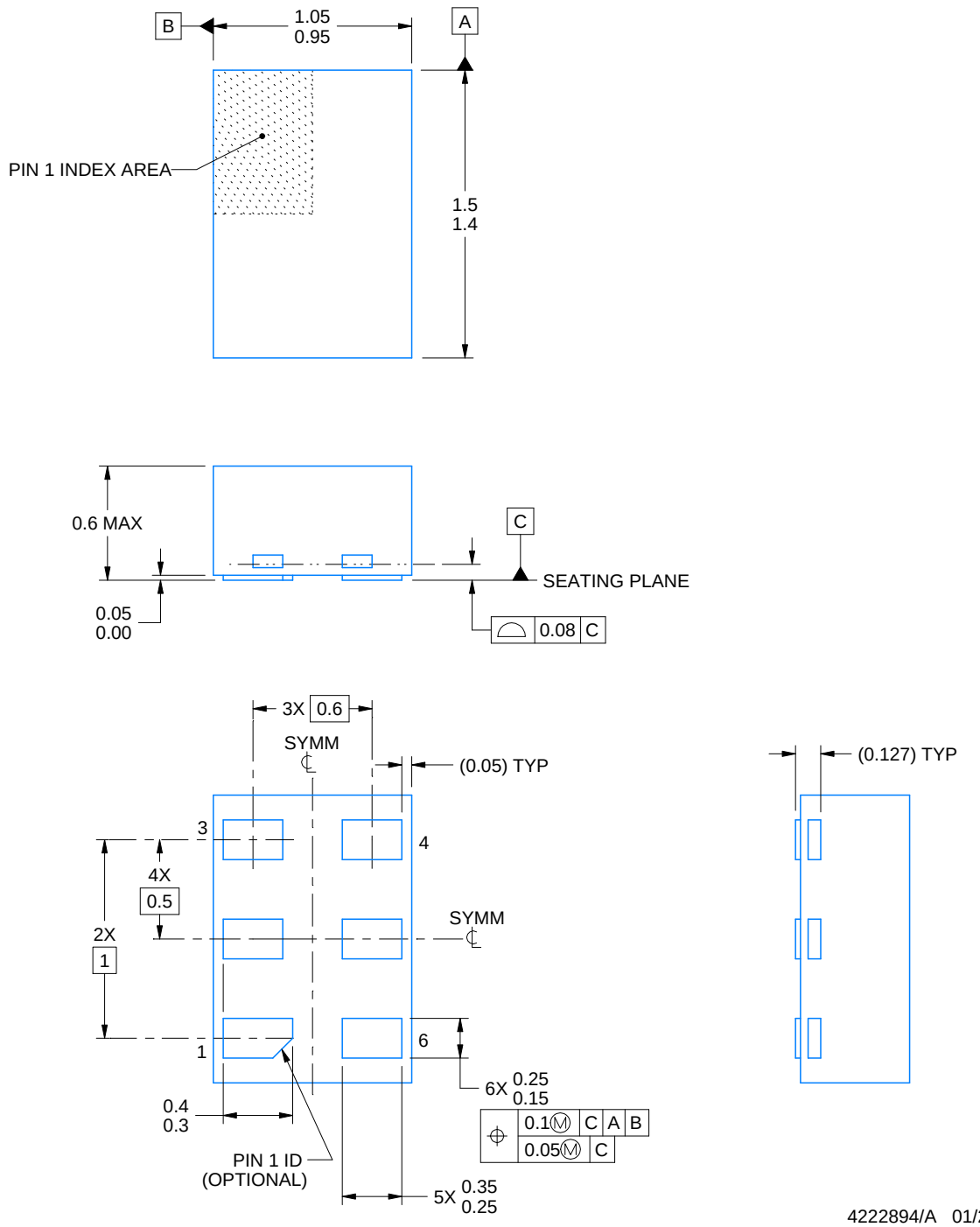

NOTES:

1. All linear dimensions are in millimeters. Any dimensions in parenthesis are for reference only. Dimensioning and tolerancing per ASME Y14.5M.
2. This drawing is subject to change without notice.

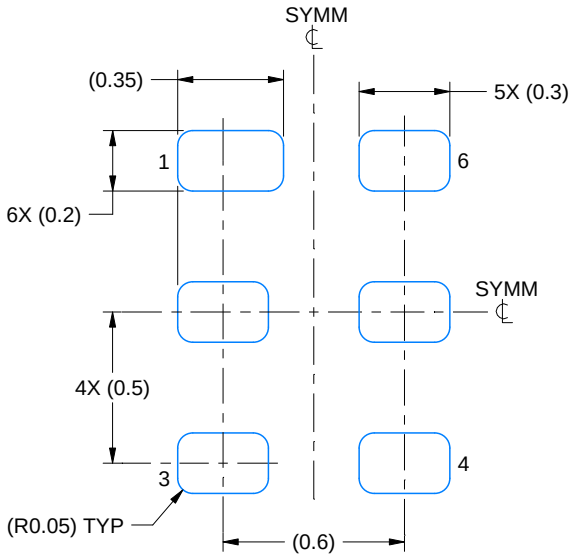

LAND PATTERN EXAMPLE
1:1 RATIO WITH PKG SOLDER PADS
EXPOSED METAL SHOWN
SCALE:40X

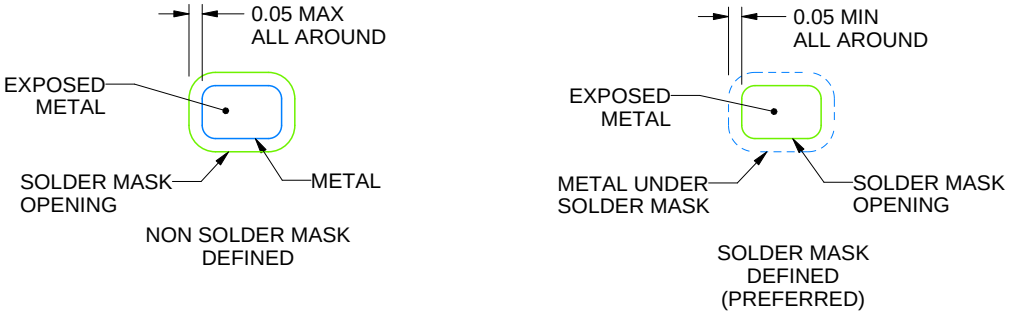

SOLDER MASK DETAILS

4222894/A 01/2018

NOTES: (continued)

3. For more information, see QFN/SON PCB application report in literature No. SLUA271 (www.ti.com/lit/slua271).

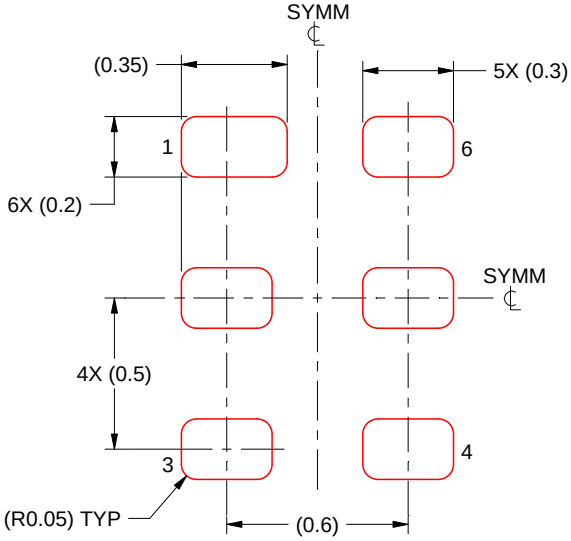

SOLDER PASTE EXAMPLE
BASED ON 0.075 - 0.1 mm THICK STENCIL
SCALE:40X

4222894/A 01/2018

NOTES: (continued)

4. Laser cutting apertures with trapezoidal walls and rounded corners may offer better paste release. IPC-7525 may have alternate design recommendations.

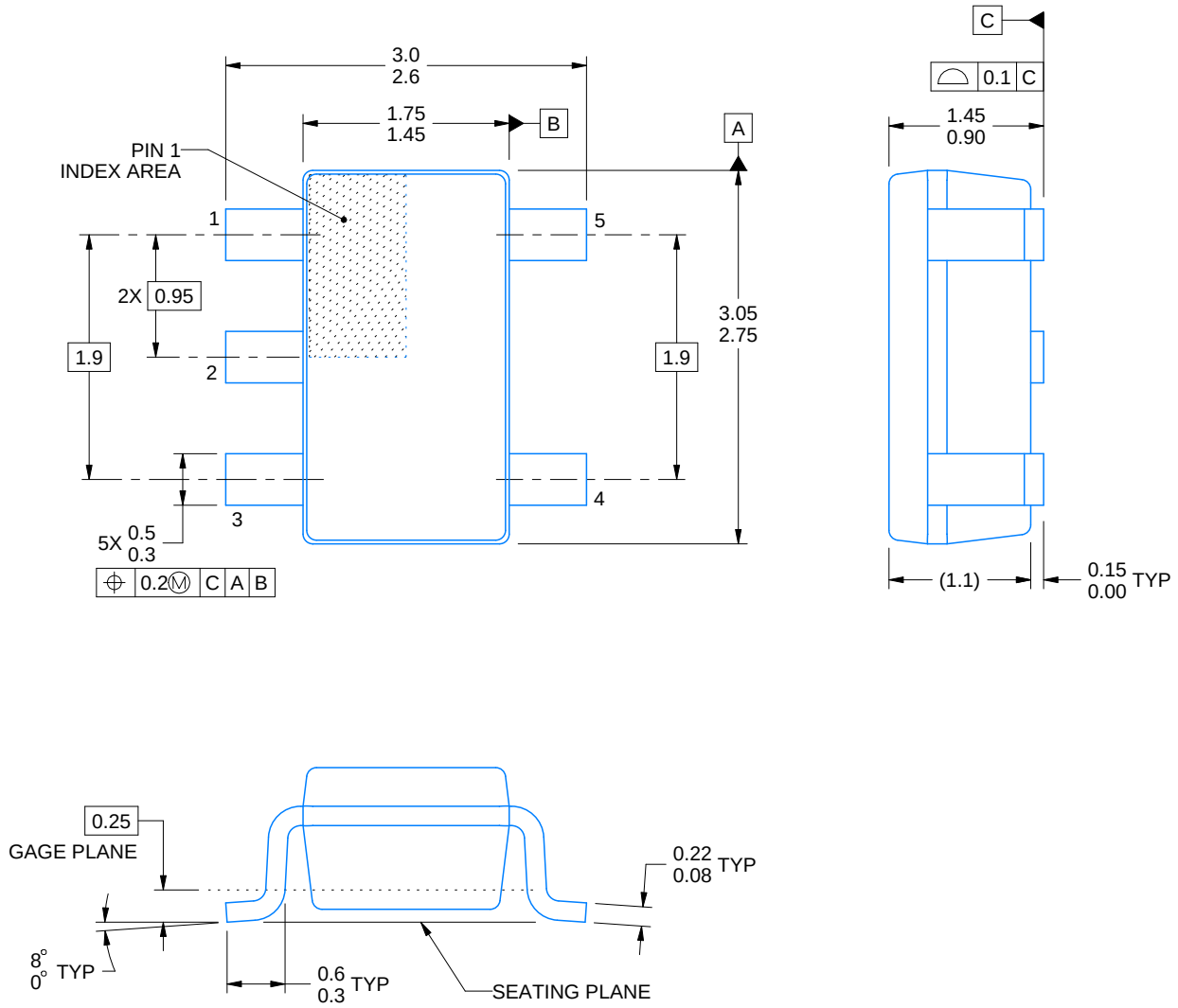

4214839/F 06/2021

NOTES:

1. All linear dimensions are in millimeters. Any dimensions in parenthesis are for reference only. Dimensioning and tolerancing per ASME Y14.5M.
2. This drawing is subject to change without notice.
3. Refernce JEDEC MO-178.
4. Body dimensions do not include mold flash, protrusions, or gate burrs. Mold flash, protrusions, or gate burrs shall not exceed 0.25 mm per side.

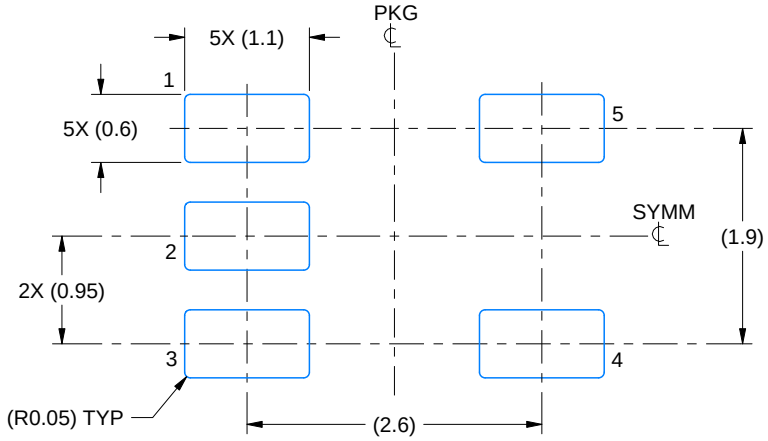

LAND PATTERN EXAMPLE
EXPOSED METAL SHOWN
SCALE:15X

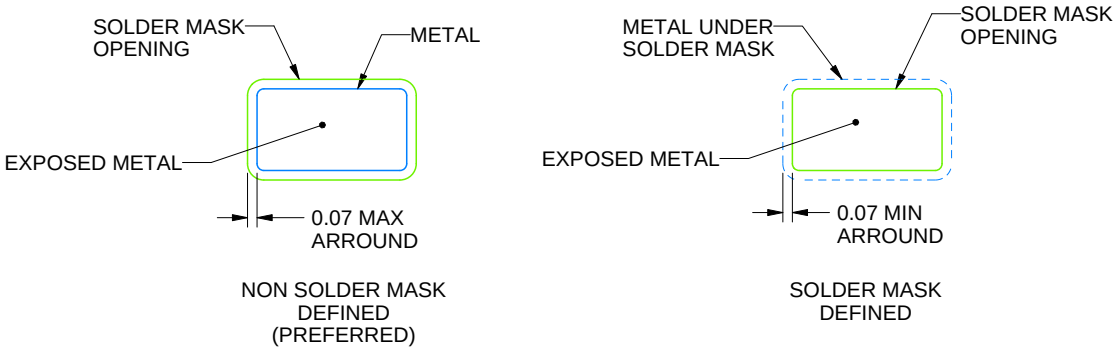

SOLDER MASK DETAILS

4214839/F 06/2021

NOTES: (continued)

5. Publication IPC-7351 may have alternate designs.
6. Solder mask tolerances between and around signal pads can vary based on board fabrication site.

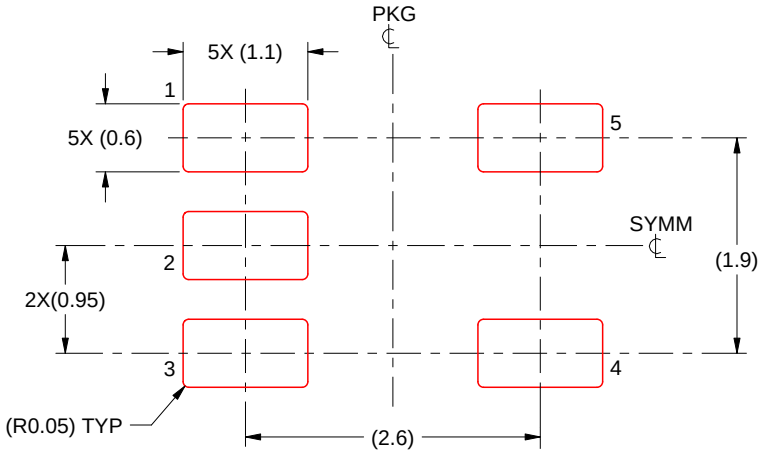

SOLDER PASTE EXAMPLE
BASED ON 0.125 mm THICK STENCIL
SCALE:15X

4214839/F 06/2021

NOTES: (continued)

7. Laser cutting apertures with trapezoidal walls and rounded corners may offer better paste release. IPC-7525 may have alternate design recommendations.
8. Board assembly site may have different recommendations for stencil design.

DPW 5 X2SON - 0.4 mm max height

PLASTIC SMALL OUTLINE - NO LEAD

Images above are just a representation of the package family, actual package may vary.
Refer to the product data sheet for package details.

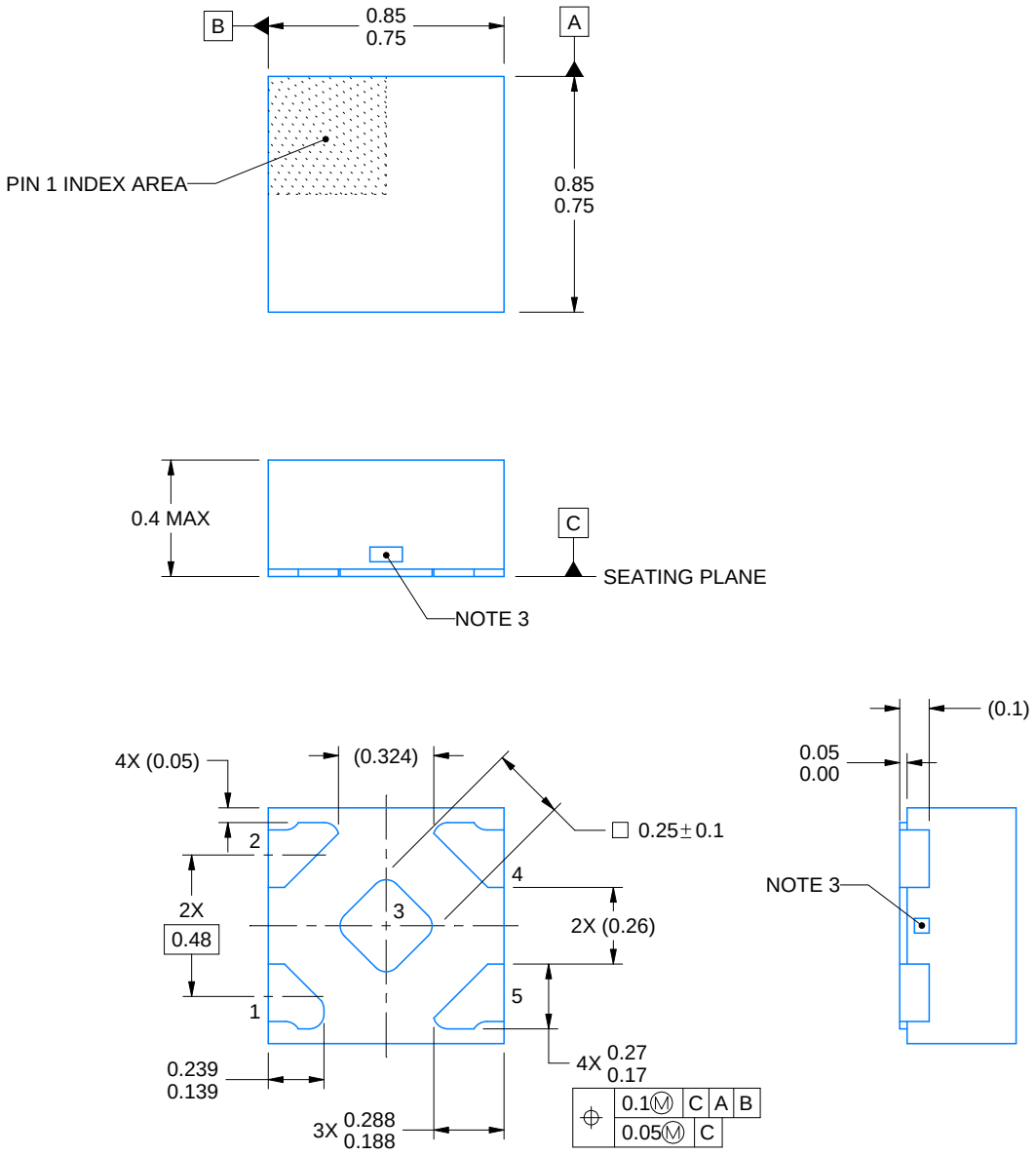

4223102/D 03/2022

NOTES:

1. All linear dimensions are in millimeters. Any dimensions in parenthesis are for reference only. Dimensioning and tolerancing per ASME Y14.5M.
2. This drawing is subject to change without notice.
3. The size and shape of this feature may vary.

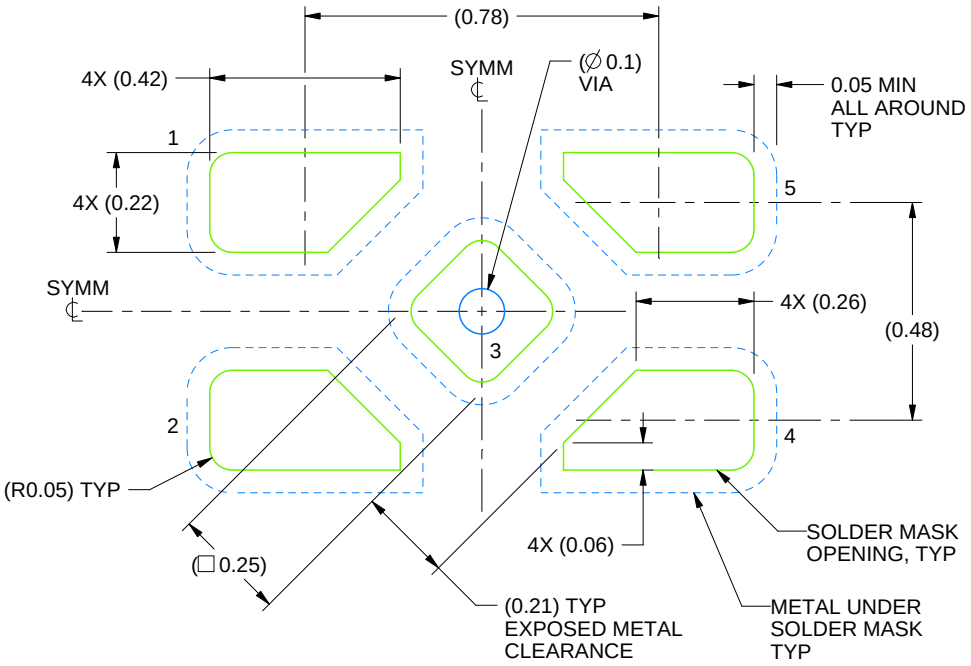

LAND PATTERN EXAMPLE
SOLDER MASK DEFINED
SCALE:60X

4223102/D 03/2022

NOTES: (continued)

4. This package is designed to be soldered to a thermal pad on the board. For more information, refer to QFN/SON PCB application note in literature No. SLUA271 (www.ti.com/lit/slua271).

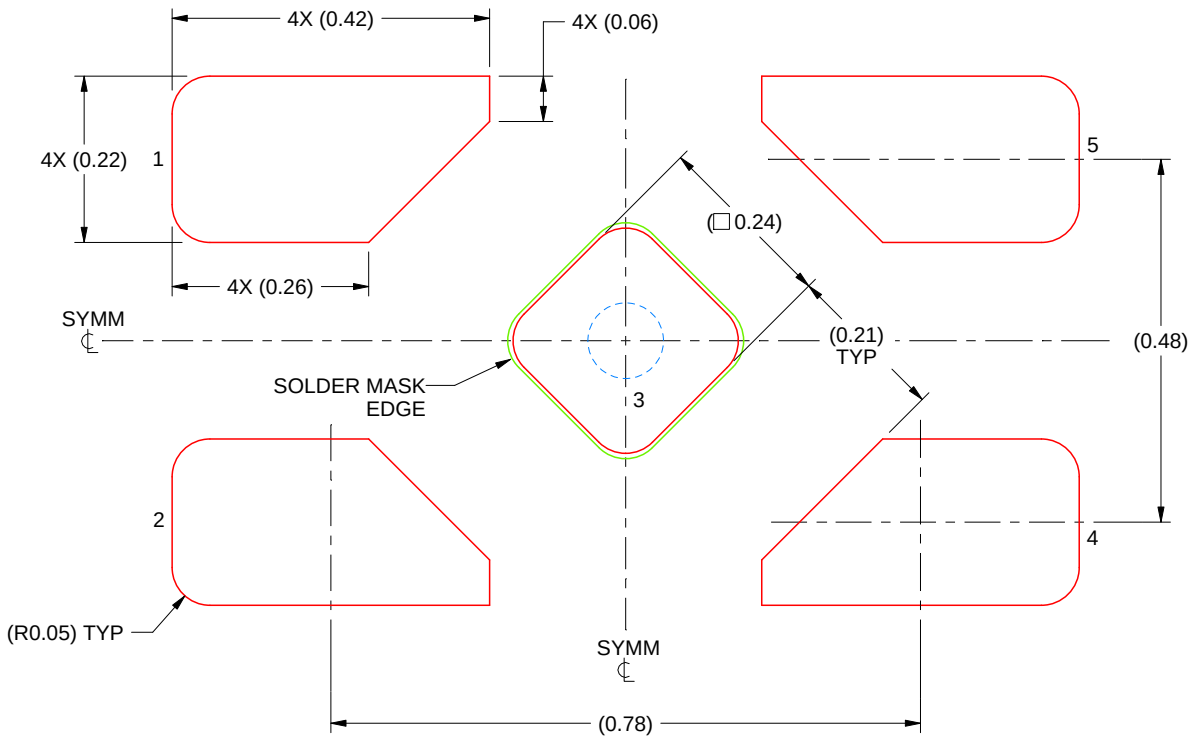

SOLDER PASTE EXAMPLE
BASED ON 0.1 mm THICK STENCIL

EXPOSED PAD 3
92% PRINTED SOLDER COVERAGE BY AREA UNDER PACKAGE
SCALE:100X

4223102/D 03/2022

NOTES: (continued)

5. Laser cutting apertures with trapezoidal walls and rounded corners may offer better paste release. IPC-7525 may have alternate design recommendations.

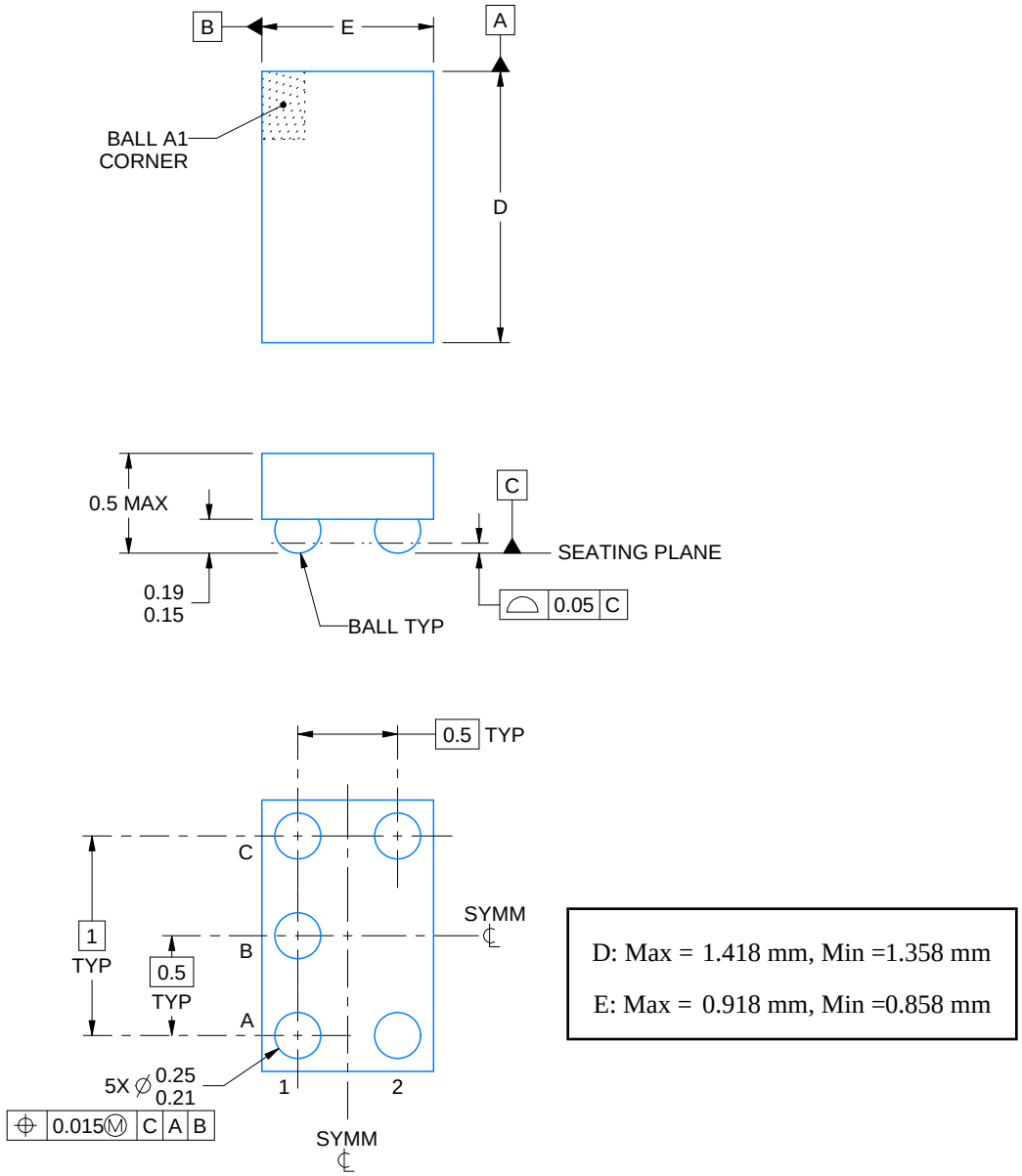

NOTES:

1. All linear dimensions are in millimeters. Any dimensions in parenthesis are for reference only. Dimensioning and tolerancing per ASME Y14.5M.
2. This drawing is subject to change without notice.

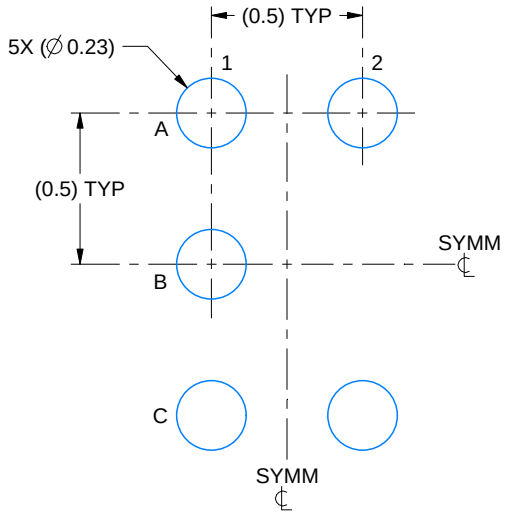

LAND PATTERN EXAMPLE
SCALE:40X

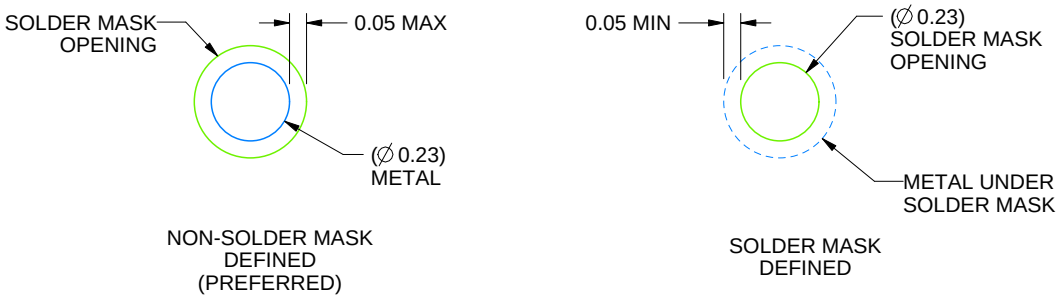

SOLDER MASK DETAILS
NOT TO SCALE

4219492/A 05/2017

NOTES: (continued)

3. Final dimensions may vary due to manufacturing tolerance considerations and also routing constraints. For more information, see Texas Instruments literature number SNVA009 (www.ti.com/lit/snva009).

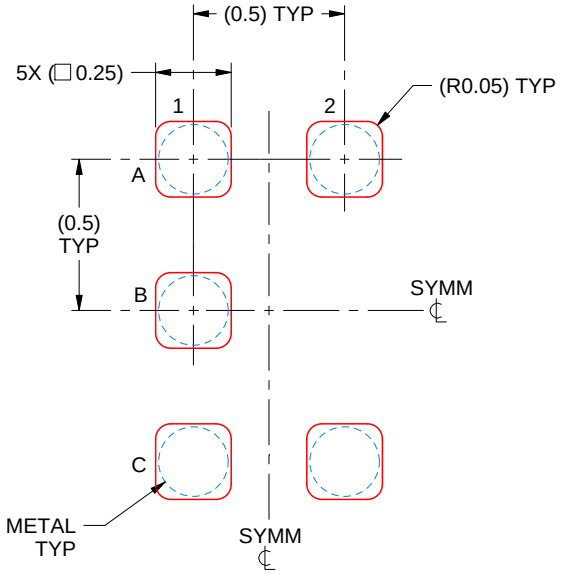

SOLDER PASTE EXAMPLE
BASED ON 0.1 mm THICK STENCIL
SCALE:40X

4219492/A 05/2017

NOTES: (continued)

4. Laser cutting apertures with trapezoidal walls and rounded corners may offer better paste release.

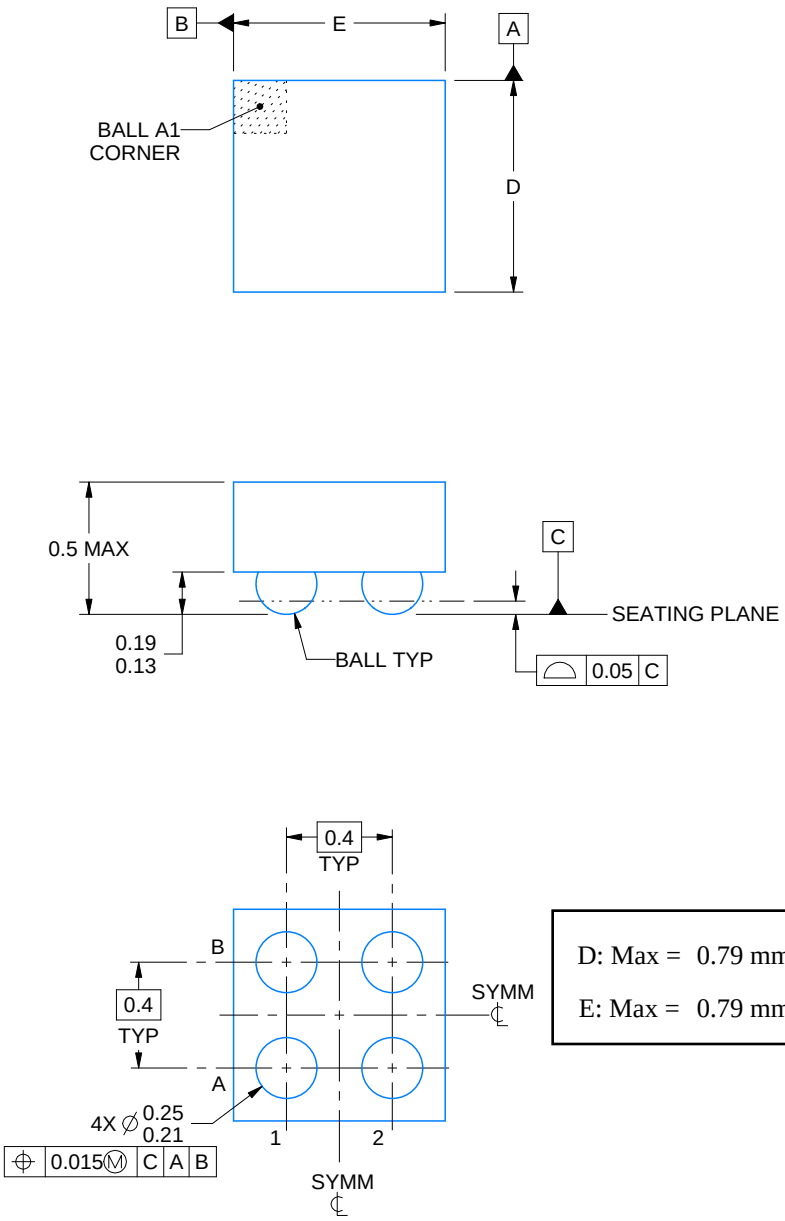

D: Max = 0.79 mm, Min = 0.73 mm

E: Max = 0.79 mm, Min = 0.73 mm

4223507/A 01/2017

NOTES:

1. All linear dimensions are in millimeters. Any dimensions in parenthesis are for reference only. Dimensioning and tolerancing per ASME Y14.5M.
2. This drawing is subject to change without notice.

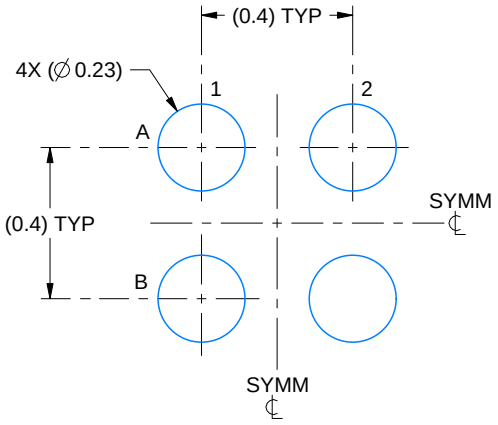

LAND PATTERN EXAMPLE
EXPOSED METAL SHOWN
SCALE:50X

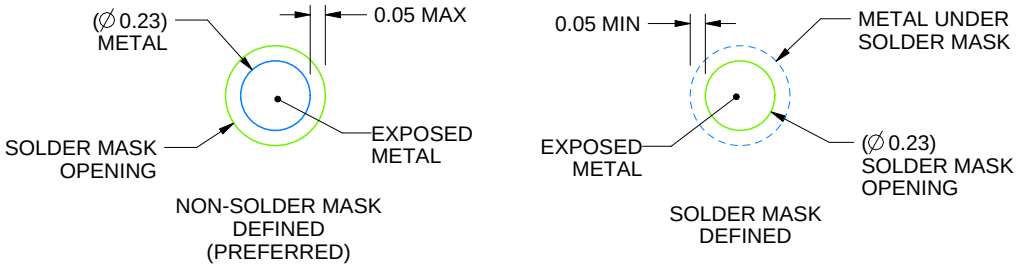

SOLDER MASK DETAILS
NOT TO SCALE

4223507/A 01/2017

NOTES: (continued)

3. Final dimensions may vary due to manufacturing tolerance considerations and also routing constraints.
   For more information, see Texas Instruments literature number SNVA009 (www.ti.com/lit/snva009).

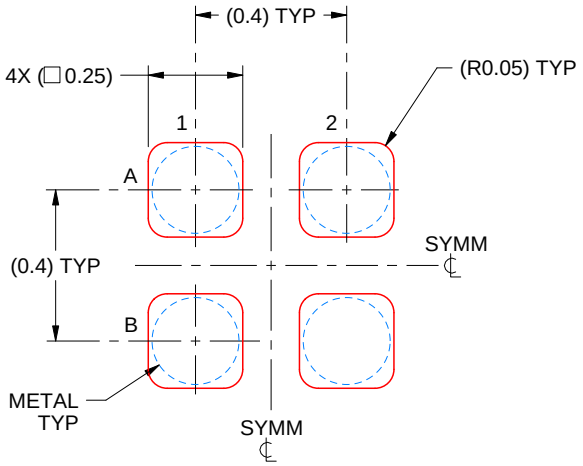

SOLDER PASTE EXAMPLE
BASED ON 0.1 mm THICK STENCIL
SCALE:50X

4223507/A 01/2017

NOTES: (continued)

4. Laser cutting apertures with trapezoidal walls and rounded corners may offer better paste release.

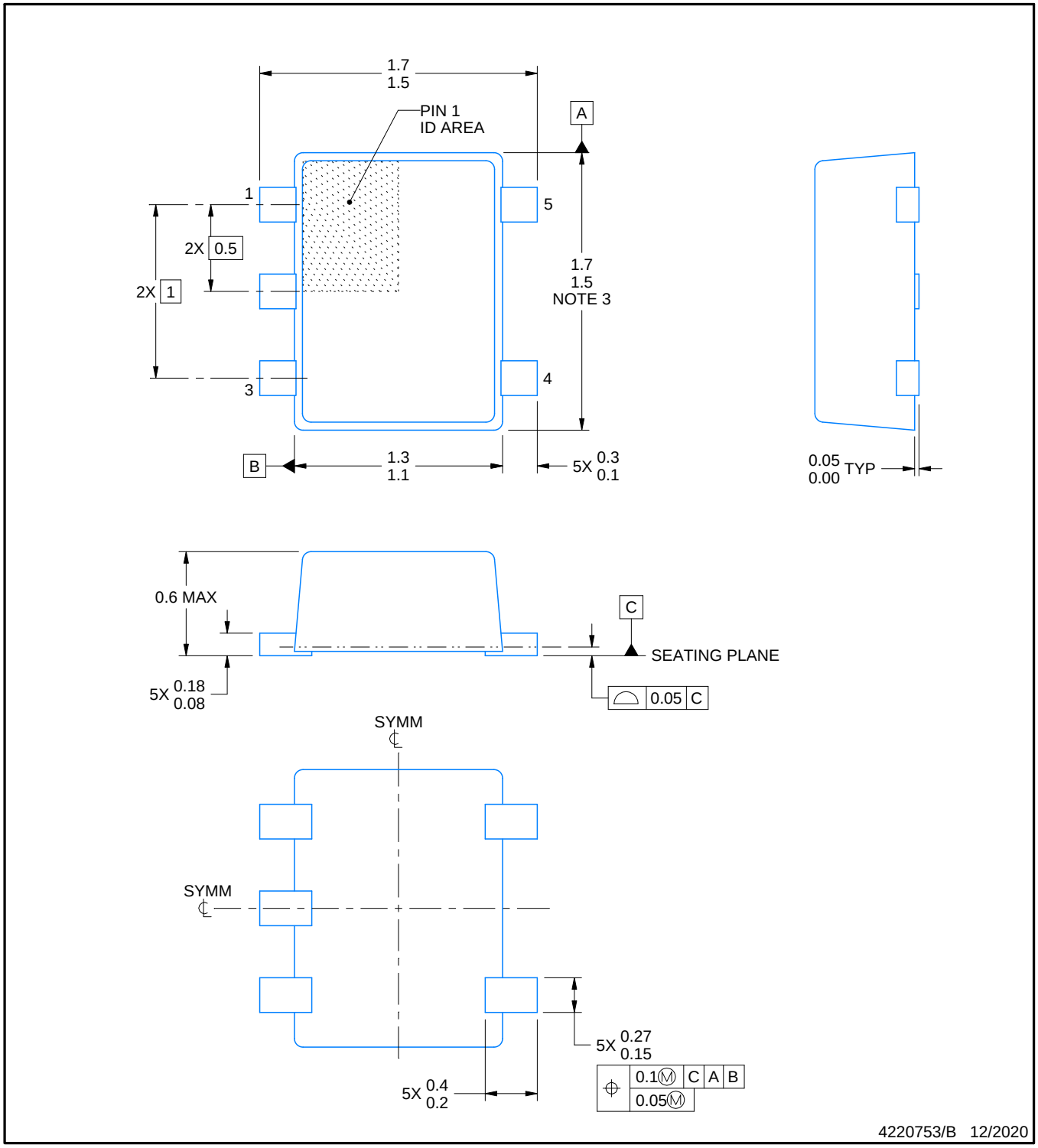

NOTES:

1. All linear dimensions are in millimeters. Any dimensions in parenthesis are for reference only. Dimensioning and tolerancing per ASME Y14.5M.
2. This drawing is subject to change without notice.
3. This dimension does not include mold flash, protrusions, or gate burrs. Mold flash, protrusions, or gate burrs shall not exceed 0.15 mm per side.
4. Reference JEDEC registration MO-293 Variation UAAD-1

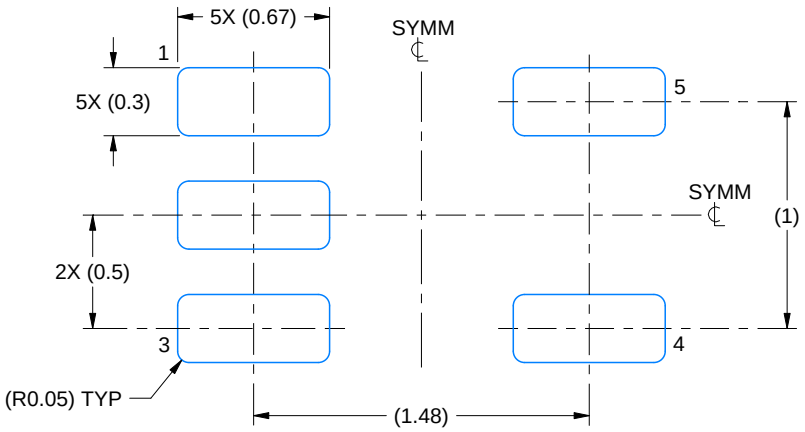

LAND PATTERN EXAMPLE
SCALE:30X

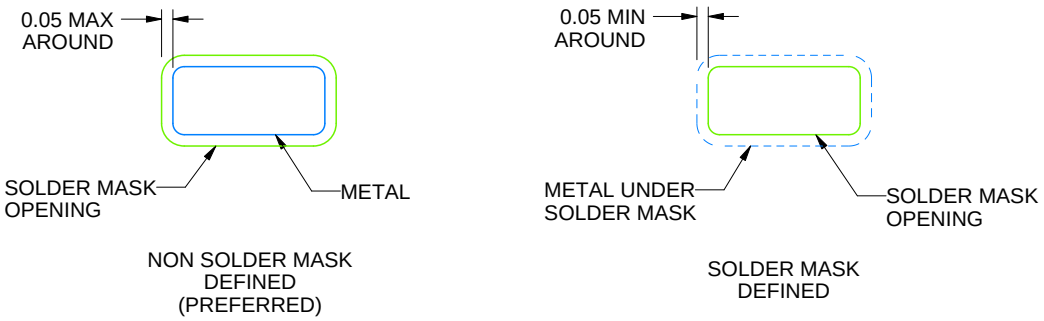

SOLDERMASK DETAILS

4220753/B 12/2020

NOTES: (continued)

5. Publication IPC-7351 may have alternate designs.
6. Solder mask tolerances between and around signal pads can vary based on board fabrication site.

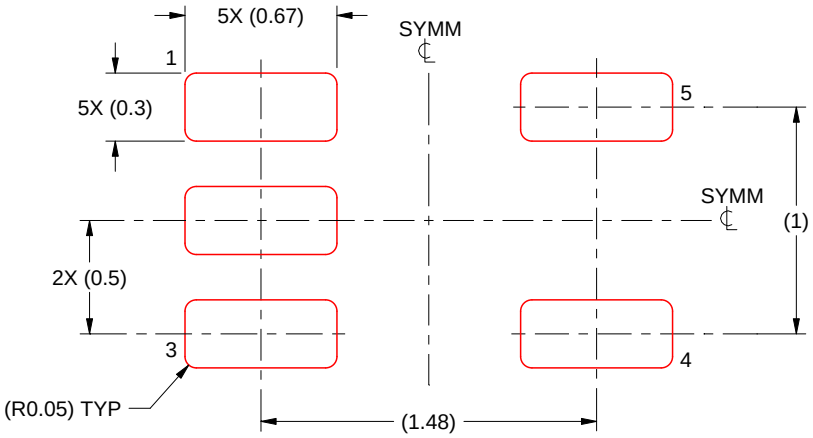

SOLDER PASTE EXAMPLE
BASED ON 0.1 mm THICK STENCIL
SCALE:30X

4220753/B 12/2020

NOTES: (continued)

7. Laser cutting apertures with trapezoidal walls and rounded corners may offer better paste release. IPC-7525 may have alternate design recommendations.
8. Board assembly site may have different recommendations for stencil design.

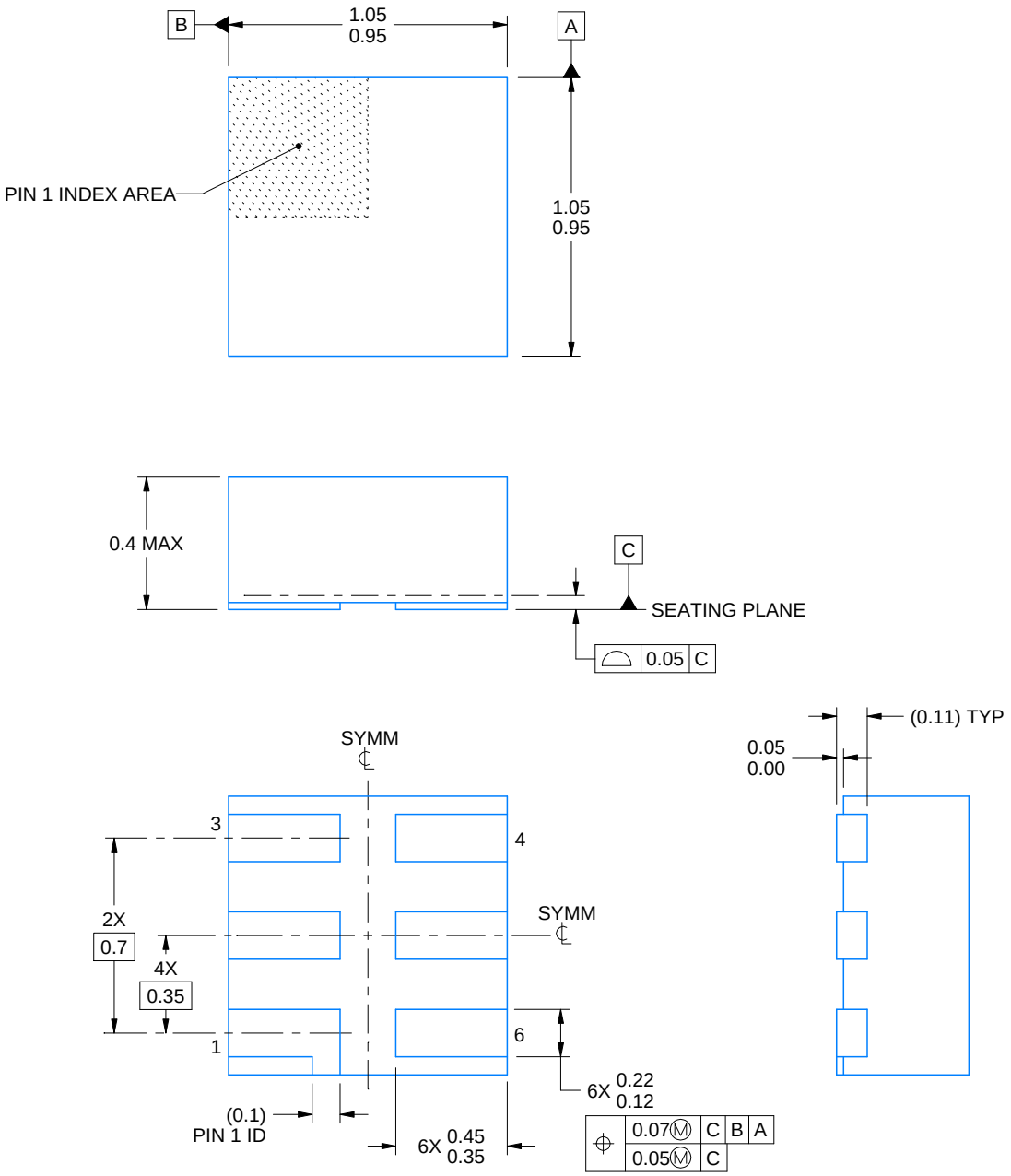

4220597/A 06/2017

NOTES:

1. All linear dimensions are in millimeters. Any dimensions in parenthesis are for reference only. Dimensioning and tolerancing per ASME Y14.5M.
2. This drawing is subject to change without notice.
3. Reference JEDEC registration MO-287, variation X2AAF.

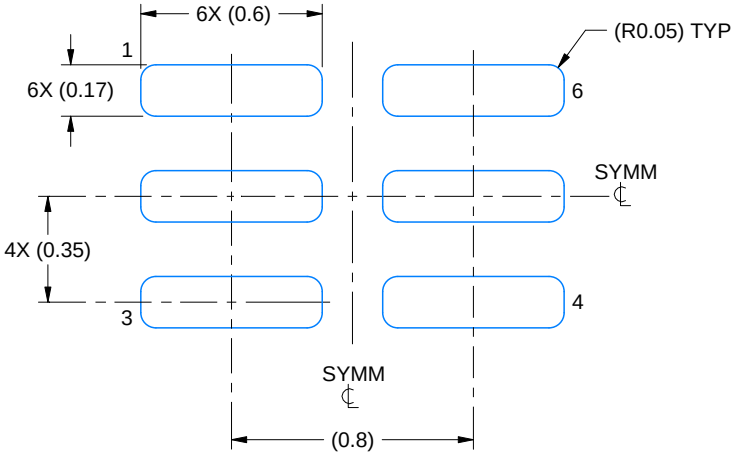

LAND PATTERN EXAMPLE
EXPOSED METAL SHOWN
SCALE:40X

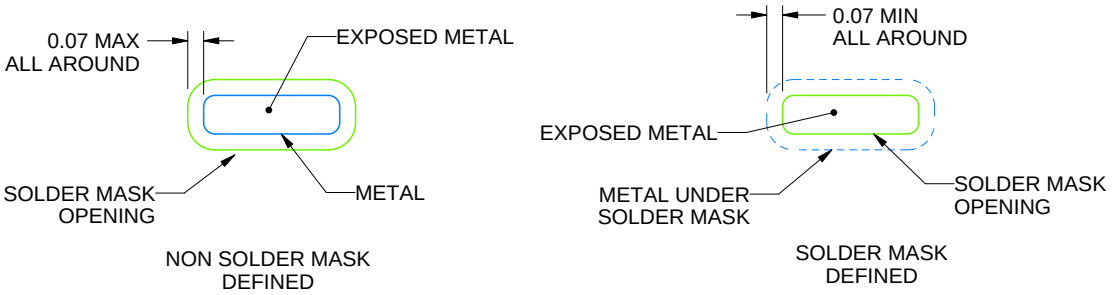

SOLDER MASK DETAILS

4220597/A 06/2017

NOTES: (continued)

4. For more information, see Texas Instruments literature number SLUA271 (www.ti.com/lit/slua271).

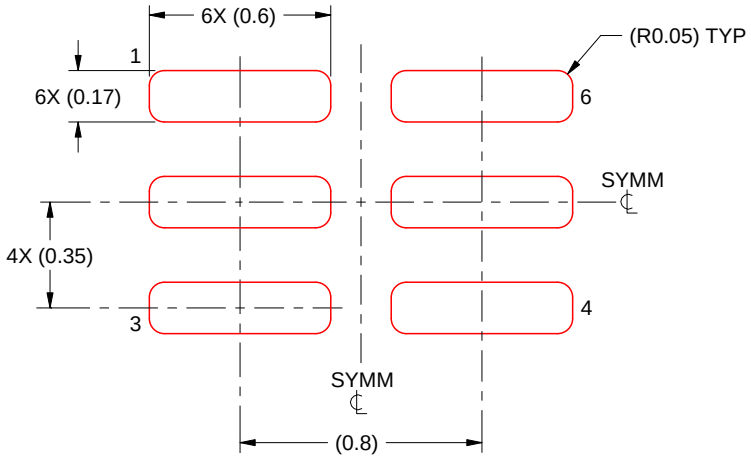

SOLDER PASTE EXAMPLE
BASED ON 0.125 mm THICK STENCIL

PRINTED SOLDER COVERAGE BY AREA UNDER PACKAGE
SCALE:40X

4220597/A 06/2017

4. Laser cutting apertures with trapezoidal walls and rounded corners may offer better paste release. IPC-7525 may have alternate design recommendations.

IMPORTANT NOTICE AND DISCLAIMER

TI PROVIDES TECHNICAL AND RELIABILITY DATA (INCLUDING DATA SHEETS), DESIGN RESOURCES (INCLUDING REFERENCE DESIGNS), APPLICATION OR OTHER DESIGN ADVICE, WEB TOOLS, SAFETY INFORMATION, AND OTHER RESOURCES “AS IS” AND WITH ALL FAULTS, AND DISCLAIMS ALL WARRANTIES, EXPRESS AND IMPLIED, INCLUDING WITHOUT LIMITATION ANY IMPLIED WARRANTIES OF MERCHANTABILITY, FITNESS FOR A PARTICULAR PURPOSE OR NON-INFRINGEMENT OF THIRD PARTY INTELLECTUAL PROPERTY RIGHTS.

These resources are intended for skilled developers designing with TI products. You are solely responsible for (1) selecting the appropriate TI products for your application, (2) designing, validating and testing your application, and (3) ensuring your application meets applicable standards, and any other safety, security, regulatory or other requirements.

These resources are subject to change without notice. TI grants you permission to use these resources only for development of an application that uses the TI products described in the resource. Other reproduction and display of these resources is prohibited. No license is granted to any other TI intellectual property right or to any third party intellectual property right. TI disclaims responsibility for, and you will fully indemnify TI and its representatives against, any claims, damages, costs, losses, and liabilities arising out of your use of these resources.

TI’s products are provided subject to TI’s Terms of Sale or other applicable terms available either on ti.com or provided in conjunction with such TI products. TI’s provision of these resources does not expand or otherwise alter TI’s applicable warranties or warranty disclaimers for TI products.

TI objects to and rejects any additional or different terms you may have proposed.

Mailing Address: Texas Instruments, Post Office Box 655303, Dallas, Texas 75265
Copyright © 2022, Texas Instruments Incorporated