TLC694x 16 通道 32/48 路复用 16 位 ES-PWM 恒定电流 LED 驱动器

1 特性

- 电源电压范围
  - V_{CC} 电压范围：3V 至 5.5V
  - V_{LED} 电压范围：高达 V_{CC} + 0.3V
- 16 个恒定电流阱通道
  - 0.3mA 至 25mA (3V ≤ V_{CC} ≤ 5.5V)
  - 通道电流偏差：±1%（典型值）
  - 器件电流偏差：±1%（典型值）
  - 膝点电压低：10mA 时为 0.3V（典型值）
- 7 位（128 级）全局亮度控制功能 (BC)
- 16 位（65,536 级）增强频谱 PWM 灰度控制
- 内置存储器支持 TLC6946 32 路复用，支持 TLC6948 48 路复用
- 增强的 LED 显示性能
  - 改善了低灰度均匀性
  - 低灰度耦合问题消除
  - 去除了重影和毛虫问题
- 高速串行数据接口
  - 数据移位时钟：33MHz（最大值）
  - 灰度控制时钟：33MHz（最大值）
  - 支持双边灰度控制
- 诊断和保护
  - LED 开路检测 (LOD)
  - IREF 电阻器短路保护 (ISP)
  - 热关断 (TSD)
- 智能省电模式

2 应用

- 单色、多色、全色 LED 显示
- 高刷新率 LED 视频显示
- 高密度、小间距 LED 矩阵显示

3 说明

在高密度、小间距 LED 面板 应用中，人们对多通道 LED 驱动器的性能要求在不断提高，以期实现高多路复用、高 PWM 分辨率和高刷新率。为了满足严格的显示质量要求，LED 驱动器必须能够解决不同 LED 矩阵应用场景中的各种问题。

TLC694x 器件是一款 16 通道、恒定电流阱 LED 驱动器。每个通道都有独立可调的 65,536 级 PWM 灰度控制。所有 16 个通道的最大恒定电流值由一个具有 128 级全局亮度控制的外部电阻设置，电流范围为 0.3mA 至 25mA。

器件信息(1)

器件型号	封装	封装尺寸（标称值）
TLC6946	SSOP (24)	8.65mm × 3.90mm
	VQFN (24)	4.00mm x 4.00mm
TLC6948	SSOP (24)	8.65mm × 3.90mm
	VQFN (24)	4.00mm × 4.00mm

(1) 如需了解所有可用封装，请参阅数据表末尾的可订购产品附录。

T48 路多路复用 LC6948典型应用原理图

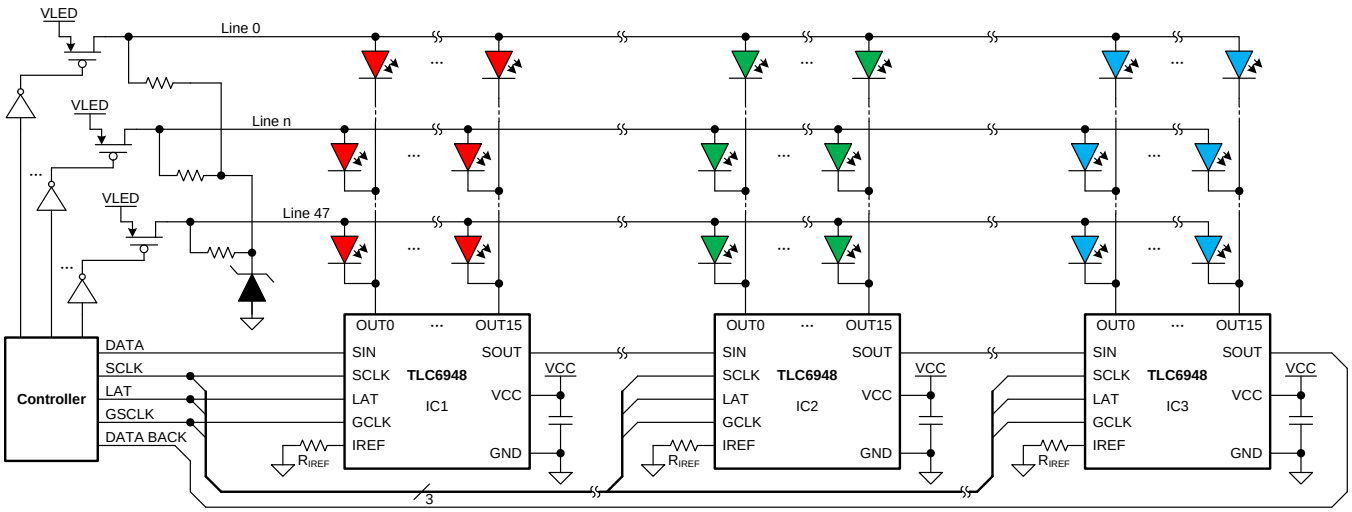

本文档旨在为方便起见，提供有关 TI 产品中文版本的信息，以确认产品的概要。 有关适用的官方英文版本的最新信息，请访问 www.ti.com，其内容始终优先。 TI 不保证翻译的准确性和有效性。 在实际设计之前，请务必参考最新版本的英文版本。

目录

1 特性 ... 1
2 应用 ... 1
3 说明 ... 1
4 修订历史记录 ... 2
5 说明 （续） ... 3
6 **Pin Configuration and Functions** ... 4
7 **Specifications** ... 6
7.1 Absolute Maximum Ratings ... 6
7.2 ESD Ratings ... 6
7.3 Recommended Operating Conditions ... 6
7.4 Thermal Information ... 7
7.5 Electrical Characteristics ... 7
7.6 Switching Characteristics ... 9
7.7 Typical Characteristics ... 11
8 **Parameter Measurement Information** ... 13
8.1 Pin Equivalent Input and Output Schematic Diagrams ... 13
9 **Detailed Description** ... 14
9.1 Overview ... 14
9.2 Functional Block Diagram ... 15
9.3 Feature Description ... 16
9.4 Device Functional Modes ... 18
10 **Application and Implementation** ... 19
10.1 Application Information ... 19
10.2 Typical Application ... 19
11 **Power Supply Recommendations** ... 22
12 **Layout** ... 22
12.1 Layout Guidelines ... 22
12.2 Layout Examples ... 23
13 器件和文档支持 ... 25
13.1 文档支持 ... 25
13.2 相关链接 ... 25
13.3 接收文档更新通知 ... 25
13.4 社区资源 ... 25
13.5 商标 ... 25
13.6 静电放电警告 ... 25
13.7 术语表 ... 25
14 机械、封装和可订购信息 ... 25

4 修订历史记录

Changes from Original (June 2018) to Revision A **Page**

- 首次发布生产数据数据表 ... 1

版权 © 2018–2019, Texas Instruments Incorporated

5 说明 （续）

TLC694x 器件集成了增强型电路来解决小间距 LED 显示应用中的 各种显示问题：低灰度均匀性问题、耦合问题、重影问题和卡特彼勒问题。

TLC694x 器件 具有 LED 开路检测功能，错误检测结果可以通过串行数据接口读取。热关断和 IREF 电阻短路保护可确保实现更高的系统可靠性。TLC694x 器件还具有智能省电模式，可以在所有输出关断的情况下将总电流消耗设置为 1mA（典型值）。

Copyright © 2018–2019, Texas Instruments Incorporated

6 Pin Configuration and Functions

DBQ Package
24-Pin SSOP
Top View

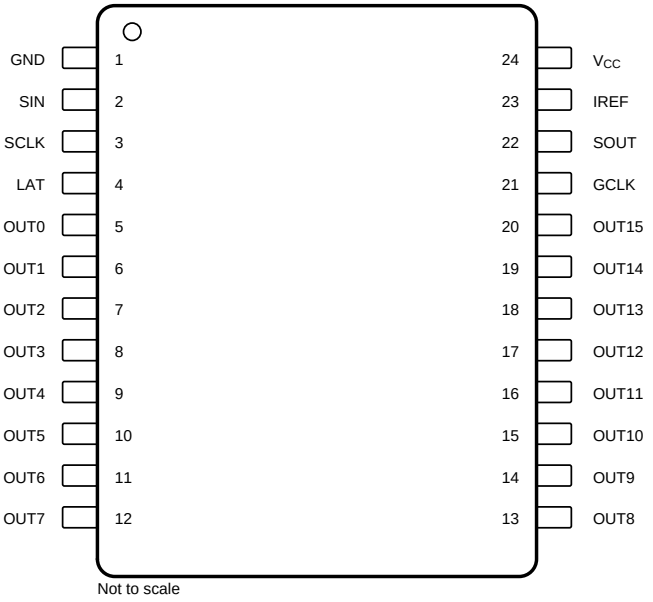

Not to scale

RGE Package
24-Pin VQFN With Exposed Thermal Pad
Top View

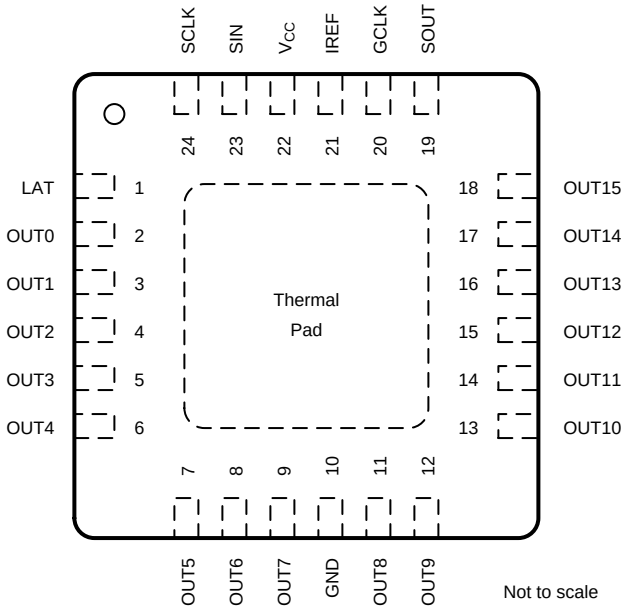

Not to scale

Pin Functions

PIN			I/O	DESCRIPTION
NAME	NO.			
	DBQ	RGE		
GCLK	21	20	I	Grayscale (GS) pulse-width modulation (PWM) reference-clock-signal input pin. In the default operating mode, each GCLK rising edge increments the GS counter for PWM control. GCLK supports dual-edge operation.
GND	1	10	—	Power-ground reference
IREF	23	21	I	Pin for setting the maximum constant-current value. Connecting an external resistor between IREF and GND sets the maximum current for each constant-current output channel. When this pin is connected directly to GND, all outputs are forced off. The external resistor should be placed close to the device.
LAT	4	1	I	Data latch pin. The falling edge of LAT latches the data from the common shift register into the GS data memory or the function control register.

Copyright © 2018–2019, Texas Instruments Incorporated

Pin Functions (continued)

PIN			I/O	DESCRIPTION
NAME	NO.			
	DBQ	RGE		
OUT0	5	2	O	Constant-current output. Each output can be tied together with others to increase the constant current. A different voltage can be applied to each output.
OUT1	6	3	O	
OUT2	7	4	O	
OUT3	8	5	O	
OUT4	9	6	O	
OUT5	10	7	O	
OUT6	11	8	O	
OUT7	12	9	O	
OUT8	13	11	O	
OUT9	14	12	O	
OUT10	15	13	O	
OUT11	16	14	O	
OUT12	17	15	O	
OUT13	18	16	O	
OUT14	19	17	O	
OUT15	20	18	O	
SCLK	3	24	I	Clock-signal input pin. Serial data present on SIN are shifted to the LSB of the internal 16-bit common shift register on the SCLK rising edge. All data in the shift register are shifted toward the MSB of the internal 16-bit common shift register on each SCLK rising edge.
SIN	2	23	I	Serial-data input pin of the internal 16-bit common shift register. When SIN is high, the LSB of the internal 16-bit common shift register is set to 1 on the SCLK input rising edge. When SIN is low, the LSB of the internal 16-bit common shift register is set to 0 on the SCLK input rising edge.
SOUT	22	19	O	Serial data output pin of the internal 16-bit common shift register. The MSB of the internal 16-bit common shift register appears on SOUT.
V_{CC}	24	22	I	Power supply pin
Thermal pad	—	—	—	Internally connected to GND in the RGE package only. The thermal pad and the GND pin must be connected together on the board.

Copyright © 2018–2019, Texas Instruments Incorporated

7 Specifications

7.1 Absolute Maximum Ratings

over operating free-air temperature range (unless otherwise noted)(1) (2)

		MIN	MAX	UNIT
Voltage	V_{CC}	–0.3	6	V
	GCLK, IREF, LAT, SCLK, SIN, SOUT	–0.3	V_{CC} + 0.3	V
	OUT0 to OUT15	–0.3	V_{CC} + 0.3	V
Current	OUT0 to OUT15	0	27	mA
Operating junction temperature, T_J		–40	150	°C
Storage temperature, T_{stg}		–55	150	°C

(1) Stresses beyond those listed under *Absolute Maximum Ratings* may cause permanent damage to the device. Theseare stress ratings only, which do not imply functional operation of the device at these or anyother conditions beyond those indicated under *Recommended OperatingConditions*. Exposure to absolute-maximum-rated conditions for extended periods mayaffect device reliability.
(2) All voltage values are with respect to GND.

7.2 ESD Ratings

			VALUE	UNIT
$V_{(ESD)}$	Electrostatic discharge	Human-body model (HBM), per ANSI/ESDA/JEDEC JS-001(1)	±7000	V
		Charged-device model (CDM), per JEDEC specification JESD22-C101(2)	±1000	

(1) JEDEC document JEP155 states that 500-V HBM allows safemanufacturing with a standard ESD control process.
(2) JEDEC document JEP157 states that 250-V CDM allows safemanufacturing with a standard ESD control process.

7.3 Recommended Operating Conditions

over operating free-air temperature range (unless otherwise noted)

			MIN	NOM	MAX	UNIT
V_{CC}	Supply voltage	Supply voltage	3		5.5	V
V_{OUTn}	Voltage applied to OUT0 to OUT15	Voltage applied to OUT0 to OUT15	0		VCC	V
VIH	High-level input voltage	GCLK, LAT, SCLK, SIN	0.7 × VCC		VCC	V
V_{IL}	Low-level input voltage	GCLK, LAT, SCLK, SIN	0		0.3 × VCC	V
I_{OH}	High-level output current	SOUT			–2	mA
I_{OL}	Low-level output current	SOUT			2	mA
$I_{OLC, max}$	Maximum constant-output sink current	OUT0 to OUT15	0.3		25	mA
f_{SCLK}	Data-shift clock frequency	SCLK			33	MHz
f_{GCLK}	Grayscale control clock frequency	GCLK			33	MHz
$f_{GCLK,B}$	Grayscale control clock frequency for dual-edge operation	GCLK			25	MHz
$t_{w(H0)}$	Pulse width duration	SCLK	10			ns
$t_{w(L0)}$	Pulse width duration	SCLK	10			ns
$t_{w(H1)}$	Pulse width duration	GCLK	10			ns
$t_{w(L1)}$	Pulse width duration	GCLK	10			ns
$t_{w(H2)}$	Pulse width duration	GCLK (for dual-edge operation)	18			ns
$t_{w(L2)}$	Pulse width duration	GCLK (for dual-edge operation)	18			ns
$t_{su(0)}$	Setup time	SIN to SCLK↑	2			ns
$t_{su(1)}$	Setup time	LAT ↑ to SCLK ↑	5			ns
$t_{su(2)}$	Setup time	LAT ↓ to SCLK ↑	5			ns
$t_{su(3)}$	Setup time	LAT ↓ to SCLK ↑ ,read data from SOUT	50			ns
$t_{su(4)}$	Setup time	LAT ↓ (WRTGS) to LAT ↓ (WRTGS)	1.5			µs

Copyright © 2018–2019, Texas Instruments Incorporated

Recommended Operating Conditions (continued)

over operating free-air temperature range (unless otherwise noted)

			MIN	NOM	MAX	UNIT
$t_{su(5)}$	Setup time	LAT ↓ (WRTGS) to LAT ↓ (VSYNC)	1.5			µs
$t_{su(6)}$	Setup time	LAT ↓ (VSYNC) to GCLK ↑	2.5			µs
$t_{su(7)}$	Setup time	LAT ↓ (VSYNC) to LAT ↓ (WRTGS)	2.5			µs
$t_{su(8)}$	Setup time	Last LAT (non-0 GS data latched) ↓ to the first GCLK ↑ of next frame (wake up from power-save mode)	50			µs
t_{LSW}	Line switching time	Last GCLK ↓ to the first GCLK ↑ of next line	1			µs
$t_{h(0)}$	Hold time	SCLK ↑ to SIN	2			ns
$t_{h(1)}$	Hold time	SCLK ↑ to LAT ↑	2			ns
$t_{h(2)}$	Hold time	SCLK ↑ to LAT ↓	10			ns
T_A	Operating ambient temperature	Operating ambient temperature	–40		85	°C
T_J	Operating junction temperature	Operating junction temperature	–40		125	°C

7.4 Thermal Information

THERMAL METRIC(1)		TLC6946		UNIT
		DBQ (SSOP)	RGE (VQFN)	
		24 PINS	24 PINS	
$R_{\theta JA}$	Junction-to-ambient thermal resistance	87.2	35.6	°C/W
$R_{\theta JC(top)}$	Junction-to-case (top) thermal resistance	42.3	34.7	°C/W
$R_{\theta JB}$	Junction-to-board thermal resistance	41.4	15.2	°C/W
ψ_{JT}	Junction-to-top characterization parameter	9.2	0.7	°C/W
ψ_{JB}	Junction-to-board characterization parameter	41	15.2	°C/W
$R_{\theta JC(bot)}$	Junction-to-case (bottom) thermal resistance	N/A	5	°C/W

(1) For more information about traditional and new thermalmetrics, see the *Semiconductor and IC Package Thermal Metrics* application report.

7.5 Electrical Characteristics

V_{CC} = 3 V to 5.5 V and T_A = –40°C to 85°C; typical values are at V_{CC} = V_{LED} = 3.5 V, T_A = 25°C, over recommended operating conditions (unless otherwise noted)

PARAMETER		TEST CONDITIONS	MIN	TYP	MAX	UNIT
V_{OH}	High-level output voltage	I_{OH} = –2 mA at SOUT	V_{CC} – 0.4		V_{CC}	V
V_{OL}	Low-level output voltage	I_{OL} = 2 mA at SOUT			0.4	V
V_{IREF}	Reference voltage	BC = 00h, R_{IREF} = 10.7 kΩ (I_{OUTn} = 0.3-mA target)		0.8		V
$V_{(LOD)}$	LED open-detection threshold	All OUTn = on, LODVTH = 00b	0.12	0.2	0.28	V
		All OUTn = on, LODVTH = 01b	0.42	0.5	0.58	V
		All OUTn = on, LODVTH = 10b	0.82	0.9	0.98	V
		All OUTn = on, LODVTH = 11b	1.12	1.2	1.28	V
$V_{(KNEE)}$	Knee voltage (OUT0 to OUT15)	All OUTn = on, BC = 36h, R_{IREF} = 1.27 kΩ (I_{OUTn} = 10-mA target)		0.3		V
ΔIOLC0	Constant-current error (channel-to-channel)(1)	All OUTn = on, BC = 00h,V_{OUTn} = 1 V, R_{IREF} = 10.7 kΩ (I_{OUTn} = 0.3-mA target), T_A = 25°C, includes the V_{IREF} tolerance		±1%	±3.5%	

(1) The deviation of each output from average of all channels constant current. The deviation is calculated by the formula.

$$\Delta(\%) = \left[\frac{IOUTn}{\frac{IOUT0 + IOUT1 + ... + IOUT14 + IOUT15}{16}} - 1 \right] \times 100$$

Copyright © 2018–2019, Texas Instruments Incorporated

Electrical Characteristics (continued)

V_{CC} = 3 V to 5.5 V and T_A = –40°C to 85°C; typical values are at V_{CC} = V_{LED} = 3.5 V, T_A = 25°C, over recommended operating conditions (unless otherwise noted)

PARAMETER		TEST CONDITIONS	MIN	TYP	MAX	UNIT
ΔI_{OLC1}	Constant-current error (device-to-device)(2)	All OUTn = on, BC = 00h, V_{OUTn} = 1 V, R_{IREF} = 10.7 kΩ (I_{OUTn} = 0.3-mA target), T_A = 25°C, includes the V_{IREF} tolerance		±1%	±2%	
ΔI_{OLC2}	Constant-current error (channel-to-channel)(1)	All OUTn = on, BC = 2Ah, V_{OUTn} = 1 V, R_{IREF} = 10.7 kΩ (I_{OUTn} = 1-mA target), T_A = 25°C, includes the V_{IREF} tolerance		±1%	±3%	
ΔI_{OLC3}	Constant-current error (device-to-device)(2)	All OUTn = on, BC = 2Ah, V_{OUTn} = 1 V, R_{IREF} = 10.7 kΩ (I_{OUTn} = 1-mA target), T_A = 25°C, includes the V_{IREF} tolerance		±1%	±2.5%	
ΔI_{OLC4}	Constant-current error (channel-to-channel)(1)	All OUTn = on, BC = 36h, V_{OUTn} = 1 V, R_{IREF} = 1.27 kΩ (I_{OUTn} = 10-mA target), T_A = 25°C, includes the V_{IREF} tolerance		±1%	±2.5%	
ΔI_{OLC5}	Constant-current error (device-to-device)(2)	All OUTn = on, BC = 36h, V_{OUTn} = 1 V, R_{IREF} = 1.27 kΩ (I_{OUTn} = 10-mA target), T_A = 25°C, includes the V_{IREF} tolerance		±1%	±2.5%	
ΔI_{OLC6}	Constant-current error (channel-to-channel)(1)	All OUTn = on, BC = 7Eh, V_{OUTn} = 1 V, R_{IREF} = 1.02 kΩ (I_{OUTn} = 25-mA target), T_A = 25°C, includes the V_{IREF} tolerance		±1%	±2%	
ΔI_{OLC7}	Constant-current error (device-to-device)(2)	All OUTn = on, BC = 7Eh, V_{OUTn} = 1 V, R_{IREF} = 1.02 kΩ (I_{OUTn} = 25-mA target), T_A = 25°C, includes the V_{IREF} tolerance		±1%	±2%	
ΔI_{OLC8}	Line regulation(3)	All OUTn = on, V_{CC} = 3 V to 5.5 V, V_{OUTn} = 1 V		±1	±2	%/V
ΔI_{OLC9}	Load regulation(4)	All OUTn = on, V_{OUTn} = 1 V to 3 V		±1	±2	%/V
$V_{IL(ISP)}$	IREF resistor short-protection enter threshold		0.15	0.195		V
$V_{IH(ISP)}$	IREF resistor short-protection release threshold			0.325	0.4	V
$T_{(TSD)}$	Thermal shutdown threshold(5)			170		°C
$T_{(HYS)}$	Thermal shutdown hysteresis(5)			15		°C
I_I	SCLK or SIN Input current	V_I = V_{CC} or GND at SCLK or SIN	–1		1	µA

(2) The deviation of the average of constant current from the ideal constant current value.

$$\Delta(\%) = \left[\frac{\frac{IOUT0 + IOUT1 + ... + IOUT14 + IOUT15}{16} - \text{Ideal Output Current}}{\text{Ideal Output Current}} \right] \times 100$$

,Ideal current is calculated by the following equation

$$\text{Ideal Output}(mA) = \text{Gain} \times \left(\frac{V_{IREF}}{R_{IREF(\Omega)}} \right) \times \left(\frac{1}{8} + \frac{BC}{144} \right)$$

(3) Line regulation is calculated by the following equation

$$\Delta(\%V) = \left[\frac{(\text{IOUTn at VCC} = 5.5V) - (\text{IOUTn at VCC} = 3V)}{(\text{IOUTn at VCC} = 3V)} \right] \times \frac{100}{5.5V - 3V}$$

(4) Load regulation is calculated by the following equation

$$\Delta(\%V) = \left[\frac{(\text{IOUTn at VOUTn} = 3V) - (\text{IOUTn at VOUTn} = 1V)}{(\text{IOUTn at VOUTn} = 1V)} \right] \times \frac{100}{3V - 1V}$$

(5) Specified by design

Copyright © 2018–2019, Texas Instruments Incorporated

Electrical Characteristics (continued)

V_{CC} = 3 V to 5.5 V and T_A = –40°C to 85°C; typical values are at V_{CC} = V_{LED} = 3.5 V, T_A = 25°C, over recommended operating conditions (unless otherwise noted)

PARAMETER		TEST CONDITIONS	MIN	TYP	MAX	UNIT
$I_{CC(0)}$	Supply current(5)	GCLK = LAT = SCLK = SIN = GND, GSn = 0000h, BC = 00h, PCHG_EN = 0, V_{OUTn} = V_{CC}, R_{IREF} = open	3	4.5	6	mA
$I_{CC(1)}$		GCLK = LAT = SCLK = SIN = GND, GSn = 0000h, BC = 36h, PCHG_EN = 0, V_{OUTn} is floating, R_{IREF} = 1.27 kΩ (I_{OUTn} = 10-mA target)	4	6.5	8	mA
$I_{CC(2)}$		GCLK = LAT = SCLK = SIN = GND, GSn = 0000h, BC = 7Eh, PCHG_EN = 0, V_{OUTn} is floating, R_{IREF} = 1.27 kΩ (I_{OUTn} = 20-mA target)	4	7.5	9	mA
$I_{CC(3)}$		LAT = SCLK = SIN = GND, GCLK = 33 MHz, GSn = FFFFh, BC = 36h, PCHG_EN = 0, V_{OUTn} = 1 V, R_{IREF} = 1.27 kΩ (I_{OUTn} = 10-mA target)	4.7	7	10	mA
$I_{CC(4)}$		LAT = SCLK = SIN = GND, GCLK = 33 MHz, GSn = FFFFh, BC = 7Eh, PCHG_EN = 0, V_{OUTn} = 1 V, R_{IREF} = 1.27 kΩ (I_{OUTn} = 20-mA target)	4.7	7.7	10	mA
$I_{CC(6)}$		In power-save mode, PCHG_EN = 0, R_{IREF} = 1.60 kΩ		1	1.5	mA
R_{DW}	Pulldown resistor	LAT	250	480	750	kΩ
		GCLK	250	480	750	

7.6 Switching Characteristics

V_{CC} = 3 V to 5.5 V and T_A = –40°C to85°C; Typical values are at V_{CC} = 3.3 V, T_A = 25°C,V_{LED} = 5 V, over recommended operating conditions (unless otherwisenoted)

PARAMETER		TEST CONDITIONS	MIN	TYP	MAX	UNIT
$t_{r(0)}$	Rise time(1)	SOUT		2		ns
$t_{r(1)}$		OUTn, BC = 7Eh, V_{OUTn} = 1 V, R_{IREF} = 1.02 kΩ (I_{OUTn} = 25-mA target), T_A = 25°C, R_L = 160 Ω		20		ns
$t_{f(0)}$	Fall time(1)	SOUT		2		ns
$t_{f(1)}$		OUTn, BC = 7Eh, V_{OUTn} = 1 V, R_{IREF} = 1.02 kΩ (I_{OUTn} = 25-mA target), T_A = 25°C, R_L = 160 Ω		15		ns
$t_{pd(0)}$	Propagation delay(1)	SCLK↑ to SOUT↑↓, SEL_TD0 = 00b		5		ns
		SCLK↑ to SOUT↑↓, SEL_TD0 = 01b		10		ns
		SCLK↑ to SOUT↑↓, SEL_TD0 = 10b		20		ns
		SCLK↓ to SOUT↑↓, SEL_TD0 = 11b		5		ns
$t_{pd(1)}$		LAT↓ to SOUT, read LOD information		25	50	ns

(1) Specified by design

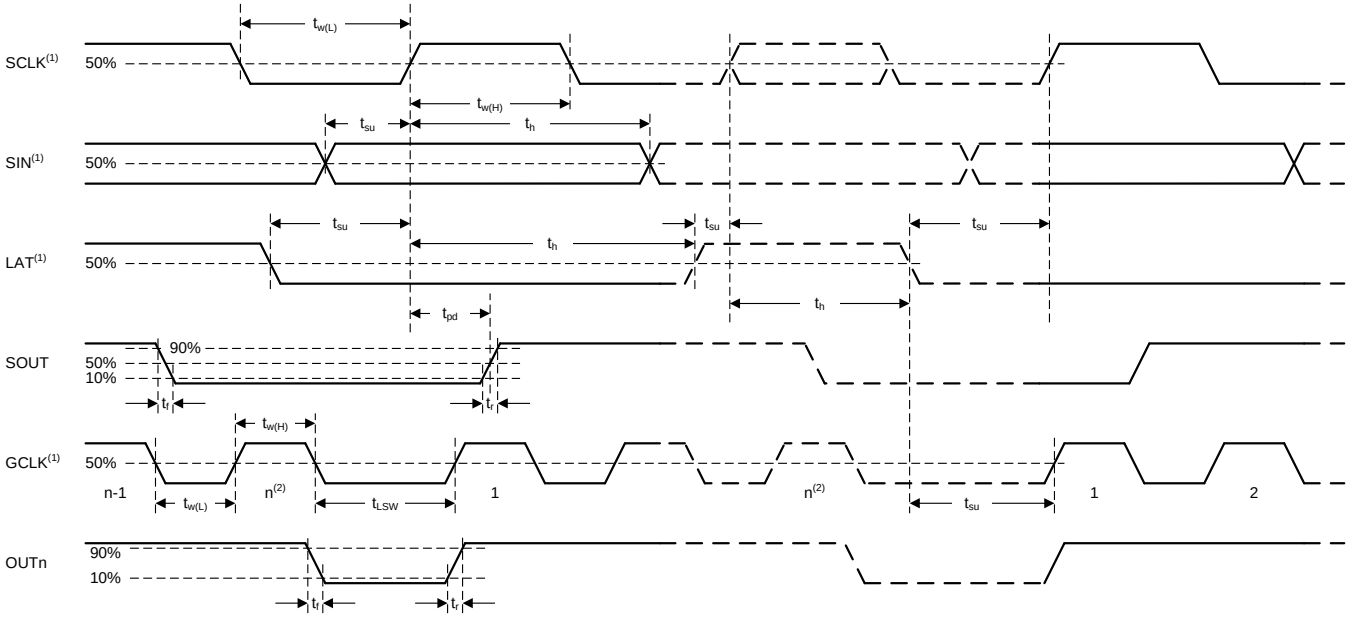

(1) Pulse rise and fall times are 1 ns–3 ns

(2) The last GCLK of each display segment in the sub period

图 1. Timing Diagram

版权 © 2018–2019, Texas Instruments Incorporated

7.7 Typical Characteristics

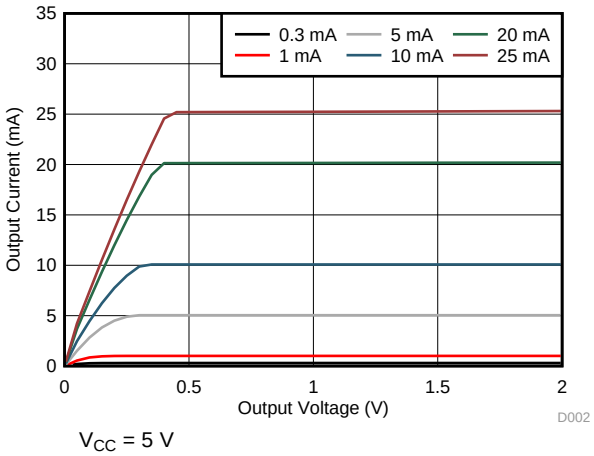

图 2. Channel Sink Current vs OUTn Voltage

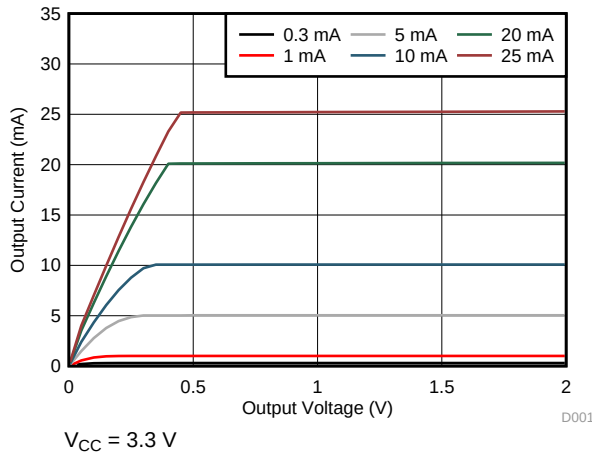

图 3. Channel Sink Current vs OUTn Voltage

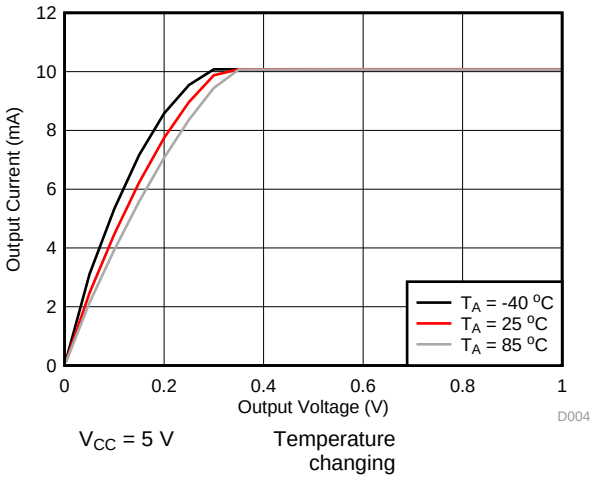

图 4. Channel Sink Current vs OUTn Voltage

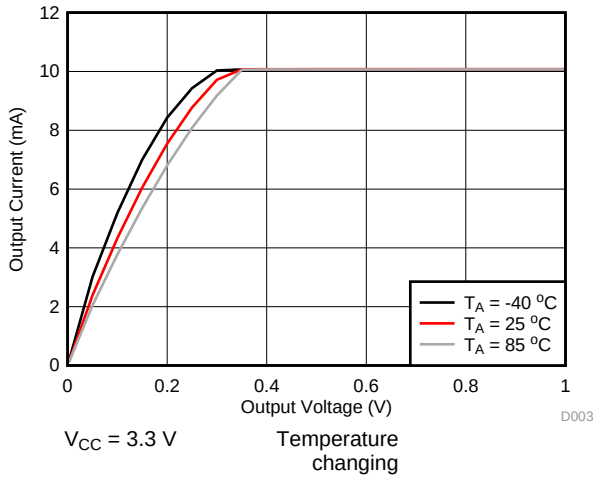

图 5. Channel Sink Current vs OUTn Current

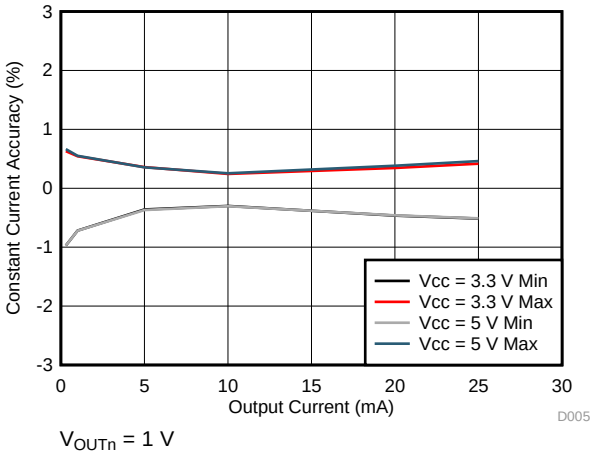

图 6. Channel to Channel Accuracy vs OUTn Current

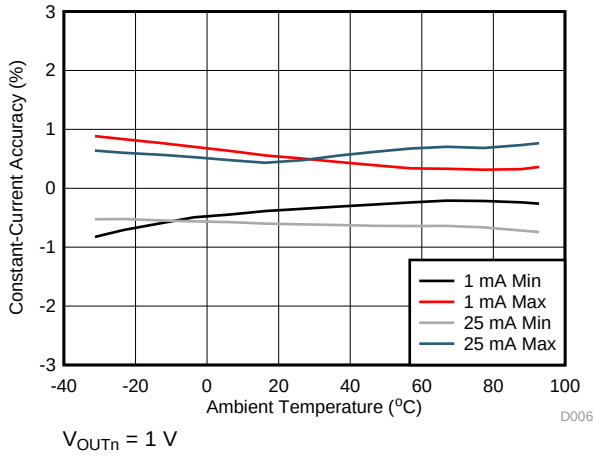

图 7. Channel to Channel Accuracy vs Temperature

Typical Characteristics (接下页)

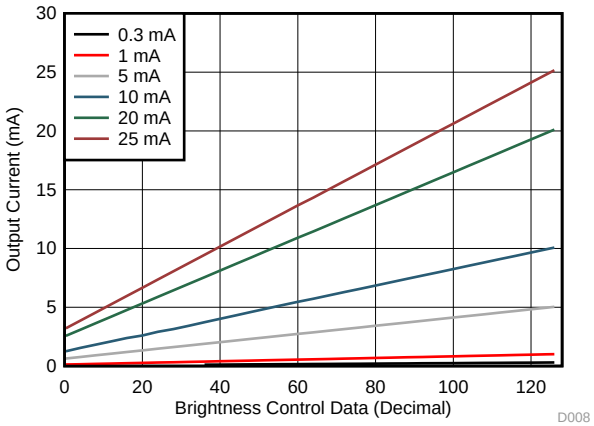

V_{CC} = 5 V V_{OUTn} = 1 V

图 8. Channel Sink Current vs Brightness Control (BC)

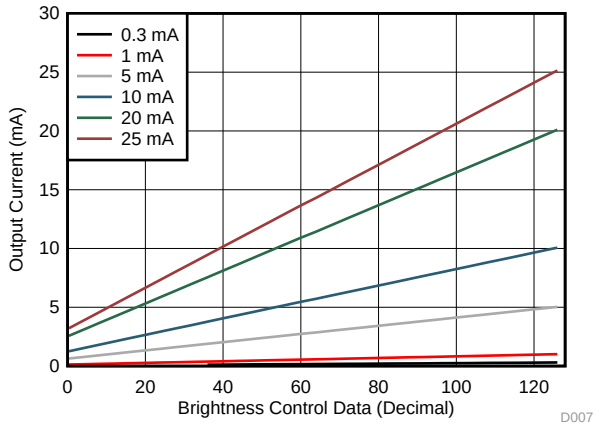

V_{CC} = 3.3 V V_{OUTn} = 1 V

图 9. Channel Sink Current vs Brightness Control (BC)

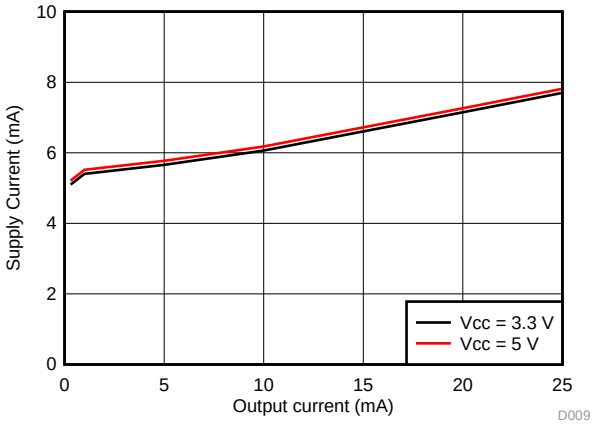

V_{OUTn} = 1 V GCLK = 33 MHz GSn = FFFFh

图 10. Supply Current (I_{CC}) vs Channel Sink Current

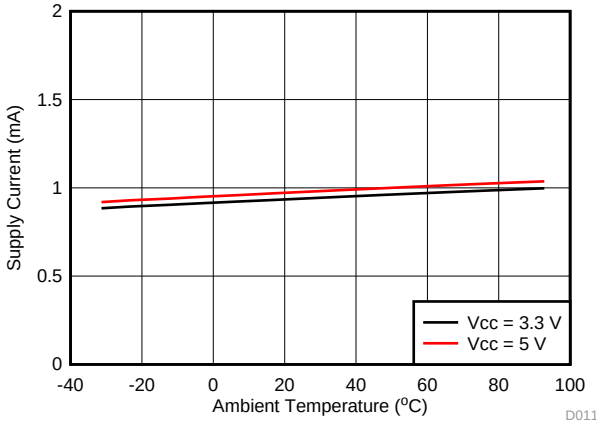

V_{OUTn} = 1 V GCLK = 33 MHz GSn = 0000h
BC = 36h R_{IREF} = 1.27 kΩ (10-mA target)

图 11. Supply Current (I_{CC}) in Power-Save Mode vs Temperature

版权 © 2018–2019, Texas Instruments Incorporated

8 Parameter Measurement Information

8.1 Pin Equivalent Input and Output Schematic Diagrams

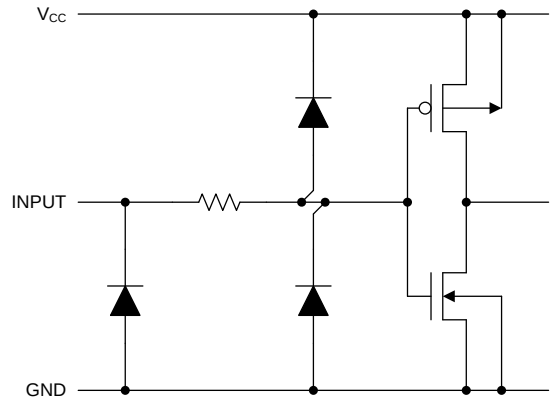

图 12. SIN, SCLK

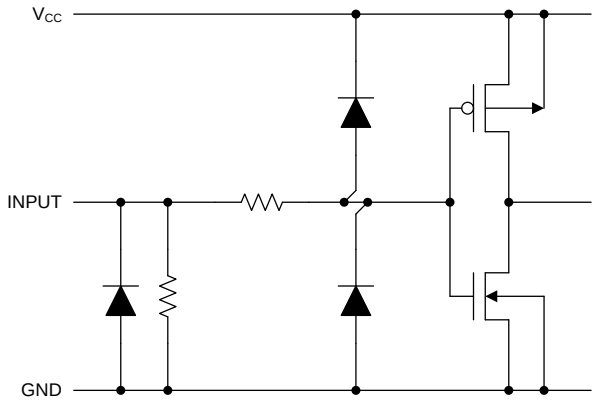

图 13. LAT, GCLK

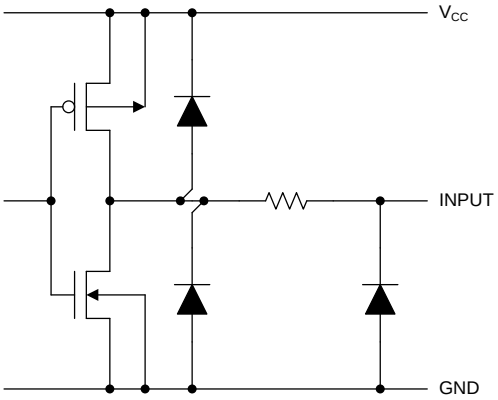

图 14. SOUT

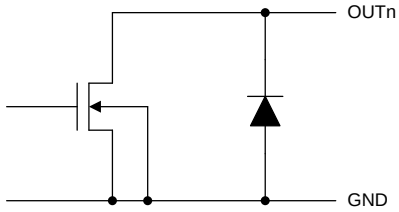

图 15. OUT0 Through OUT15

9 Detailed Description

9.1 Overview

The TLC694x device is a 16-channel constant-current-sink LED driver supporting 1- to 32-, 48-multiplexing. Each channel has an individually adjustable 65,536-step pulse-width modulation (PWM) grayscale (GS) control. The TLC6946 device implements 16-Kbit display memory and the TLC6948 device implements 24-Kbit display memory to increase the visual refresh rate and to decrease the grayscale data-writing frequency.

The TLC694x device supports current from 0.3 mA to 25 mA for each channel, with typical 1% channel-to-channel current deviation and typical 1% device-to-device current deviation. The maximum current value of all 16 channels is set by an external IREF resistor and can be adjusted by the 128-step global brightness control (BC). The device also implements low-grayscale enhancement technology to solve the coupling issue and improve the display quality in low-grayscale conditions. These features make the TLC694x device a candidate for high-density-multiplexing LED-matrix-display and LED-panel applications.

The TLC694x device integrates enhanced circuits to solve the various display issues in fine-pitch LED display applications: the low-grayscale uniformity issue, coupling issue, ghosting issue, and caterpillar issue. The TLC694x device features an LED-open detection function, and the error detection results can be read via a serial data-interface port. Thermal shutdown and I_{REF}-resistor short protection ensure a higher system reliability. The TLC694x device also has a smart power-save mode that sets the total current consumption to 1 mA (typical) when all outputs are off.

版权 © 2018–2019, Texas Instruments Incorporated

9.2 Functional Block Diagram

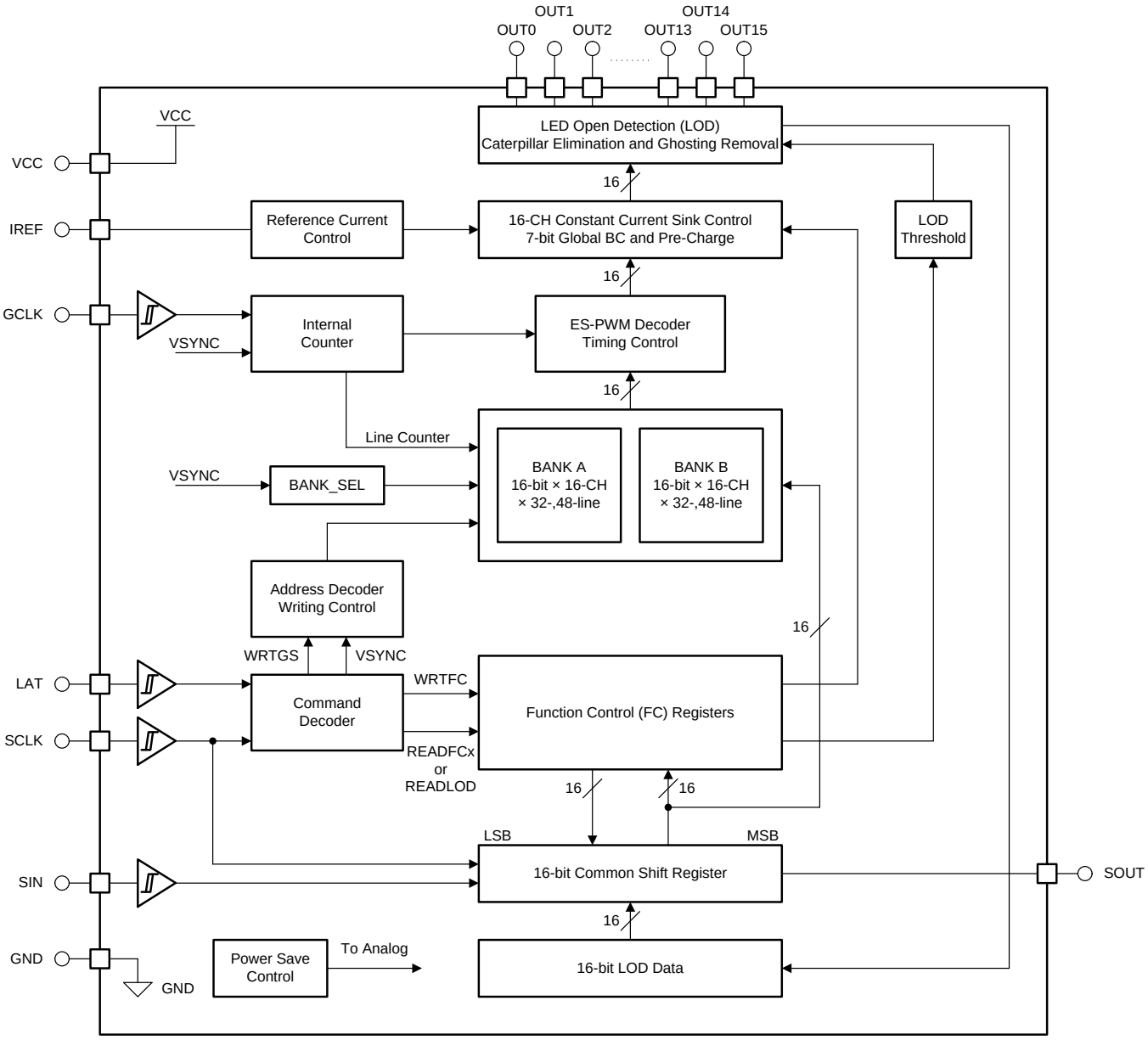

9.3 Feature Description

9.3.1 Built-In 16Kb Display Memory (SRAM)

The TLC6946 device integrates 16K bits of SRAM to support 1- to 32-multiplexing and the TLC6948 device integrates 24K bits of SRAM to support 1- to 48-multiplexing. SRAM is divided into two BANKs: BANK A and BANK B. While BANK A is displaying, BANK B is ready to receive the data of the next frame. While BANK B is displaying, BANK A is ready to receive the data of next frame.

9.3.2 GCLK Dual-Edge Operation

The TLC694x device uses the rising edge or both edges of GCLK. The selection is made by setting the GCLK_EDGE bit in the function control register. By default, the TLC6946 device uses the GCLK rising edge, and the maximum input GCLK frequency is 33 MHz. By setting GCLK_EDGE = 1, the TLC694x device operates at both GCLK edges (rising and falling), and the maximum internal GCLK frequency is 50 MHz with external 25MHz input.

9.3.3 Programmable Constant-Sink Channel Current

9.3.3.1 Global Brightness Control (BC)

The TLC694x device is able to adjust the output current of all constant-current outputs simultaneously. This function is called global brightness control (BC). The global BC for all outputs is programmed with a 7-bit word, thus all output currents can be adjusted in 128 steps from 12.5% to 100.69% for a given current-programming resistor, R_{IREF} (See 表 1). BC data can be set through the serial interface. When the BC data changes, the output current also changes immediately. When the device is powered on, the BC data in the function control register is set to 36h as the default value.

表 1. Global BC Data vs Constant-Current Ratio and Set Current Value

BC DATA			GAIN	RATIO OF GAIN / GAIN_MAX (AT MAX BC)	I_{OUT} (mA) (I_{OLCmax}= 25 mA, TYP)	I_{OUT} (mA) (I_{OLCmax}= 2.4 mA, TYP)
BINARY	DECIMAL	HEX				
000 0000	0	00	4	12.5%	3.13	0.3
000 0001	1	01	4.22	13.19%	3.3	0.32
000 0010	2	02	4.44	13.88%	3.47	0.33
...	...	...	...	...	...	...
011 0101	53	35	15.78	49.31%	12.33	1.18
011 0110 (Default)	***54 (Default)***	***36 (Default)***	***16***	***50%***	***12.5***	***1.2***
011 0111	55	37	16.22	50.69%	12.67	1.22
...	...	...	...	...	...	...
111 1101	125	7D	31.78	99.31%	24.83	2.38
111 1110	126	7E	32	100%	25	2.4
111 1111	127	7F	32.22	100.69%	25.17	2.42

9.3.3.2 Select R_{IREF} for a Given BC

The maximum current per channel, I_{OLCmax}, is determined by resistor R_{IREF}, placed between the IREF and GND pins. The voltage on IREF is typically 0.8 V. R_{IREF} can be calculated by 公式 1.

$$R_{IREF}(k\Omega) = \frac{V_{IREF}(V)}{I_{OLCmax}(mA)} \times Gain = \frac{V_{IREF}(V)}{I_{OLCmax}(mA)} \times 32 \times \left(\frac{1}{8} + \frac{BC}{144}\right) \quad (1)$$

where

- V_{IREF} is the internal reference voltage on I_{REF} (0.8 V)
- I_{OLCmax} is the maximum current for each channel
- Gain is the current gain at BC = 7E (See 表 1)

版权 © 2018–2019, Texas Instruments Incorporated

R_{IREF} must be between 1.02 kΩ and 10.7 kΩ in order to hold the channel sink current I_{OLC} between 25 mA (typical) and 0.3 mA (typical). Otherwise, the output may be unstable.

表 2. Maximum Constant Current vs External Resistor R_{IREF}

I_{OLCmax} (mA)	R_{IREF} (kΩ, typical)
25	1.02
20	1.28
15	1.71
10	2.56
5	5.12
2.4	10.7

9.3.4 Grayscale (GS) Function (PWM Control)

The TLC694x device can adjust the brightness of each output channel using a pulse-width-modulation (PWM) control scheme. The architecture of 16 bits per channel results in 65536 brightness steps, from 0% up to 100% brightness. The on-time (t_{OUT_ON}) of each output (OUTn) can be calculated by 公式 2.

$$t_{OUT_ON} = t_{GCLK} \times GSn \quad (2)$$

where GSn is the grayscale of channel OUTn

The TLC694x device implements an enhanced spectrum (ES) PWM control. The ES-PWM control can be selected with two different modes: 8-bit MSB + 8-bit LSB (8+8) mode, and 9-bit MSB + 7-bit LSB (9+7) mode. See *TLC6946 Technical Reference Manual* for more details.

9.3.5 Serial Data Interface

The TLC6948 has a flexible serial interface that can be connected to microcontrollers or digital signal processors in various ways. Only three pins are needed to input data into the device. More than two TLC6948s can be connected in series by connecting an SOUT pin from one device to the SIN pin of the next device. The SOUT pin can also be connected to the controller to read back data from the TLC6948 device.

9.3.6 LED-Open Detection (LOD)

The LED-open detection (LOD) function detects faults caused by an open circuit in any LED string or a short from OUTn to ground with low impedance. It does this by comparing the OUTn voltage to the LOD-detection threshold-voltage level set by LODVTH in the function control register. If the OUTn voltage is lower than the programmed voltage, the corresponding output LOD bit is set to 1 to indicate an open LED. Otherwise, the output of that LOD bit is 0. LOD data output by the detection circuit are valid only during the *on* period of that OUTn output channel.

9.3.7 Caterpillar Removal

The TLC694x device implements an internal circuit that can eliminate the caterpillar issue caused by an open LED. The caterpillar effect is a common issue for LED panels. The caterpillar removal function is enabled by setting LODRM_EN to 1 (default value after device powered on) in the function control register. When this function is enabled, the device automatically detects the open LED, and the corresponding channel does not turn on until device reset.

9.3.8 Precharge FET

The TLC694x internal precharge FET can prevent ghosting of multiplexed LED modules. One cause of this phenomenon is the charging current from parasitic capacitance on OUTn through the LED when the supply voltage switches from one common line to the next common line. To prevent this unwanted charging current, the TLC694x device uses an internal FET to pull up OUTn during the common-line switching period. As a result, no charging current flows through LED and ghosting is eliminated.

版权 © 2018–2019, Texas Instruments Incorporated

9.3.9 Thermal Shutdown

The thermal shutdown (TSD) function turns off all device constant-current outputs when the junction temperature (T_J) exceeds 170°C (typical). It resumes normal operation when T_J falls below 155°C (typical).

9.3.10 IREF Resistor Short Protection (ISP)

The IREF resistor short protection (ISP) function prevents unwanted large currents from flowing though the constant-current output when the IREF resistor is shorted accidently. The TLC694x device turns off all output channels when the IREF pin voltage is lower than 0.19 V (typical). When the IREF pin voltage goes higher than 0.325 V (typical), the TLC694x device resumes normal operation.

9.4 Device Functional Modes

9.4.1 Normal Operating Mode

The TLC694x device is fully functional when V_{CC} reaches 3 V and is below 5.5 V. After power on, all OUTn of the TLC694x device are turned off. All the internal counters and function control registers are initialized. Write the proper grayscale data and function control data to enable normal device operation.

9.4.2 Power-Save Mode (PSM)

The power-save mode (PSM) is enabled by setting PSM_EN to 1 in the function control register.

When powered on, the default value of this bit is 0. When this function is enabled, if all the GS data received for the next frame are 0, then device enters power-save mode during the display of the next frame. When the device is in power-save mode, it resumes normal mode when it detects non-zero GS data input. In power-save mode, part of analog circuits are not operational; the device total current consumption, I_{CC}, is 1 mA(typical).

版权 © 2018–2019, Texas Instruments Incorporated

10 Application and Implementation

注

Information in the following applications sections is not part of the TI component specification, and TI does not warrant its accuracy or completeness. TI's customers are responsible for determining suitability of components for their purposes. Customers should validate and test their design implementation to confirm system functionality.

10.1 Application Information

The TLC6948 device is a 16-channel constant-current sink LED driver supporting 1- to 48-multiplexing. Each channel has an individually adjustable 65,536-step pulse-width-modulation (PWM) grayscale (GS) control. The TLC6948 device implements 24 Kbits of display memory to increase the visual refresh rate and to decrease the grayscale data writing frequency. This integrated memory makes TLC6948 a potential for high-density, fine-pitch LED matrix applications.

10.2 Typical Application

The TLC6948 is typically connected in series to drive the LED matrix with only a few controller ports. 图 16 shows a typical application diagram with TLC6948 devices connected in cascade for an LED matrix.

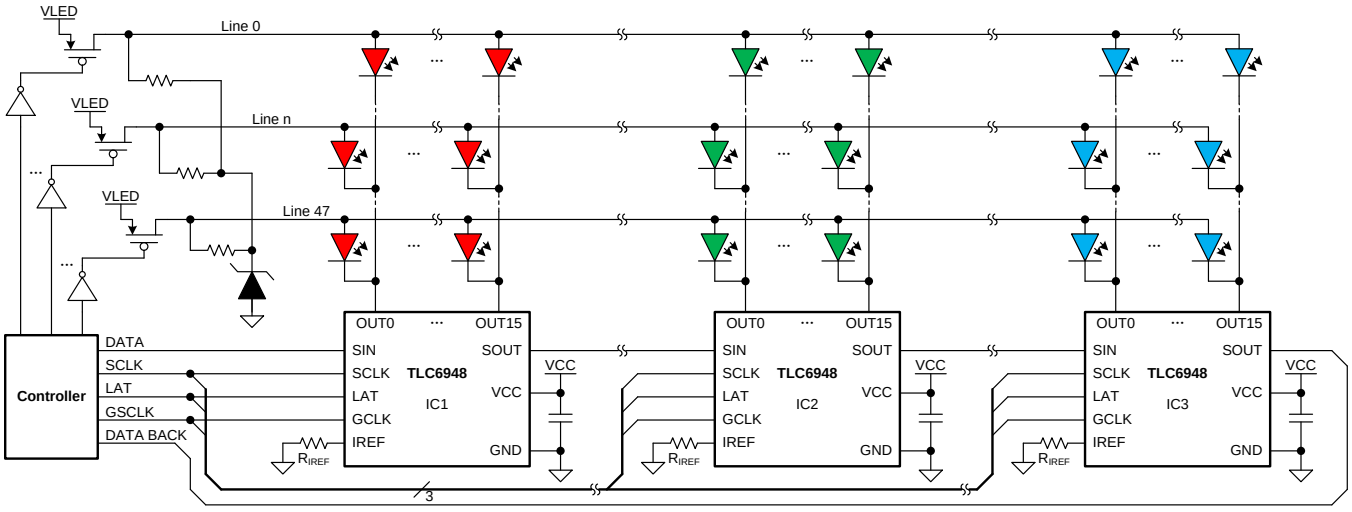

图 16. Cascading Three TLC6948 Devices

10.2.1 Design Requirements

For this design example, use the following as the input parameters.

表 3. Design Parameters

DESIGN PARAMETER	EXAMPLE VALUE
V_{CC} and V_{LED} voltage	3 V to 5.5 V
SIN, SCLK, LAT, and GCLK voltage range	Low level = GND, high level = V_{CC}
The maximum LED forward voltage, $V_{(F)}$	Red LED 2V, green and blue LED 3V
The maximum current for each color LED, I_{OLCmax}	Red LED 10mA, green LED 6mA, blue LED 4mA.

10.2.2 Detailed Design Procedures

10.2.2.1 Power Supply Voltage

The LED power supply voltage V_{LED} must be higher than $V_{(F)}$ + $V_{(KNEE)}$. The device power supply voltage, V_{CC} should be equal or higher than V_{LED}. One example value is V_{LED} = V_{CC}= 3.8 V. See *TLC6946 Technical Reference Manual* for more details.

10.2.2.2 Channel Current and Brightness Control

See *Global Brightness Control (BC)* and *Select R_{IREF} for a Given BC*. Select the reference-current-setting resistor R_{IREF} to set the maximum channel current for each color LED. Select the BC data for the best white balance of the red, green, and blue LED lamp. See *TLC6946 Technical Reference Manual* for more details.

10.2.2.3 SCLK and GCLK Frequency

SCLK is the serial data shift-in clock signal; and GCLK is the PWM-control reference-clock signal. 公式 3 shows the minimum frequency requirement for GCLK and SCLK. See *TLC6946 Technical Reference Manual* for more details.

$$f_{GCLK} = m \times n \times f_{VR}$$
$$f_{SCLK} = N \times n \times 256 \times f_{FPS} \quad (3)$$

where

- f_{GCLK} is the minimum GCLK frequency for single-edge operating mode
- f_{SCLK} is the minimum SCLK frequency
- m is the GCLK number of each sub-period, determined by the PWM mode selected
- f_{VR} is the visual refresh rate of the entire cascading series
- N is the number of cascaded TLC6948 devices
- n is the number of scan lines
- f_{FPS} is the frame rate

版权 © 2018–2019, Texas Instruments Incorporated

10.2.3 Application Curves

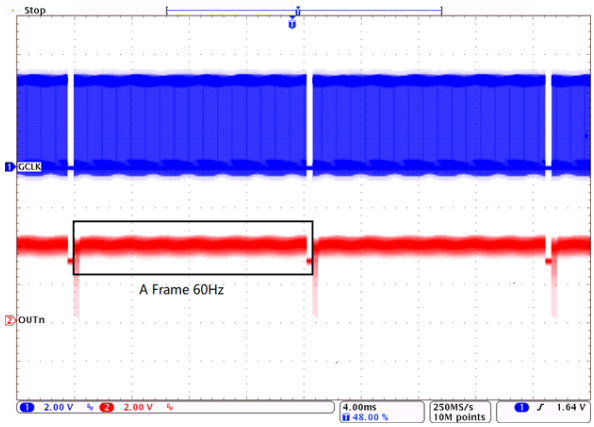

图 17. OUTn Waveform for ES-PWM Mode (GSn = 0001h)

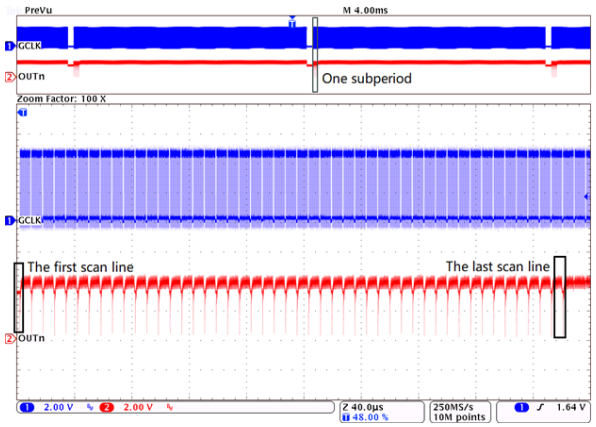

图 18. OUTn Waveform for ES-PWM Mode Zooming in One Sub-period (GSn = 0001h)

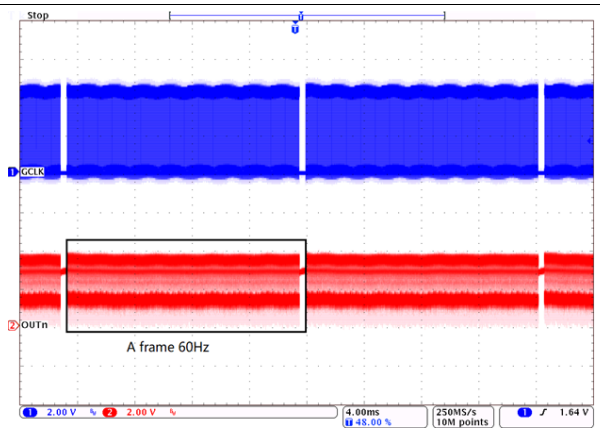

图 19. OUTn Waveform for ES-PWM Mode (GSn = FFFFh)

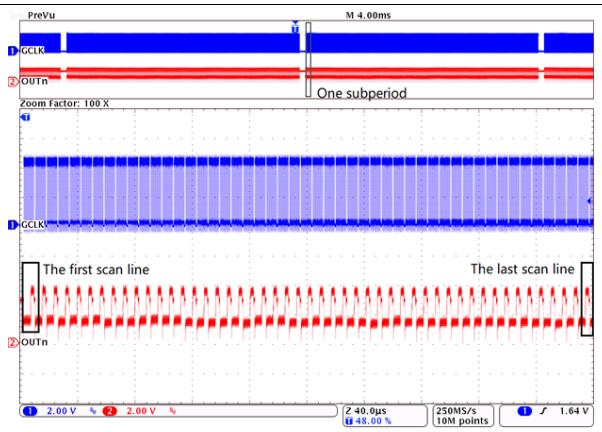

图 20. OUTn Waveform for ES-PWM Mode Zooming in One Sub-period (GSn = FFFFh)

11 Power Supply Recommendations

Decouple the V_{CC} power supply voltage by placing a 0.1-μF ceramic capacitor close to the V_{CC} pin and GND plane. Depending on panel size, several equally distributed electrolytic capacitors must be placed on the board for a well-regulated LED supply voltage V_{LED}. V_{LED} voltage ripple must be less than 5% of its nominal value.

12 Layout

12.1 Layout Guidelines

Place the decoupling capacitor near the V_{CC} pin and GND plane.

Place the current-programming resistor, R_{IREF}, close to the IREF pin and the GND pin.

Make the GND trace as wide as possible for large GND currents.

Routing between the LED cathode and the device OUTn pin must be as short and straight as possible to reduce wire inductance.

The thermal pad (QFN package) must be connected to the GND plane. Because the thermal pad is used as a power ground pin internally, there is a large current flow through this pad when all channels turn on. Furthermore, connect the thermal pad to a heat sink layer by thermal vias to reduce device temperature. One suggested thermal via pattern is shown in *Layout Examples*. For more information about suggested thermal via pattern and via size, see *PowerPAD Thermally Enhanced Package*.

MOSFETs must be placed in the in the middle of the board, which should be laid out as symmetrically as possible.

版权 © 2018–2019, Texas Instruments Incorporated

12.2 Layout Examples

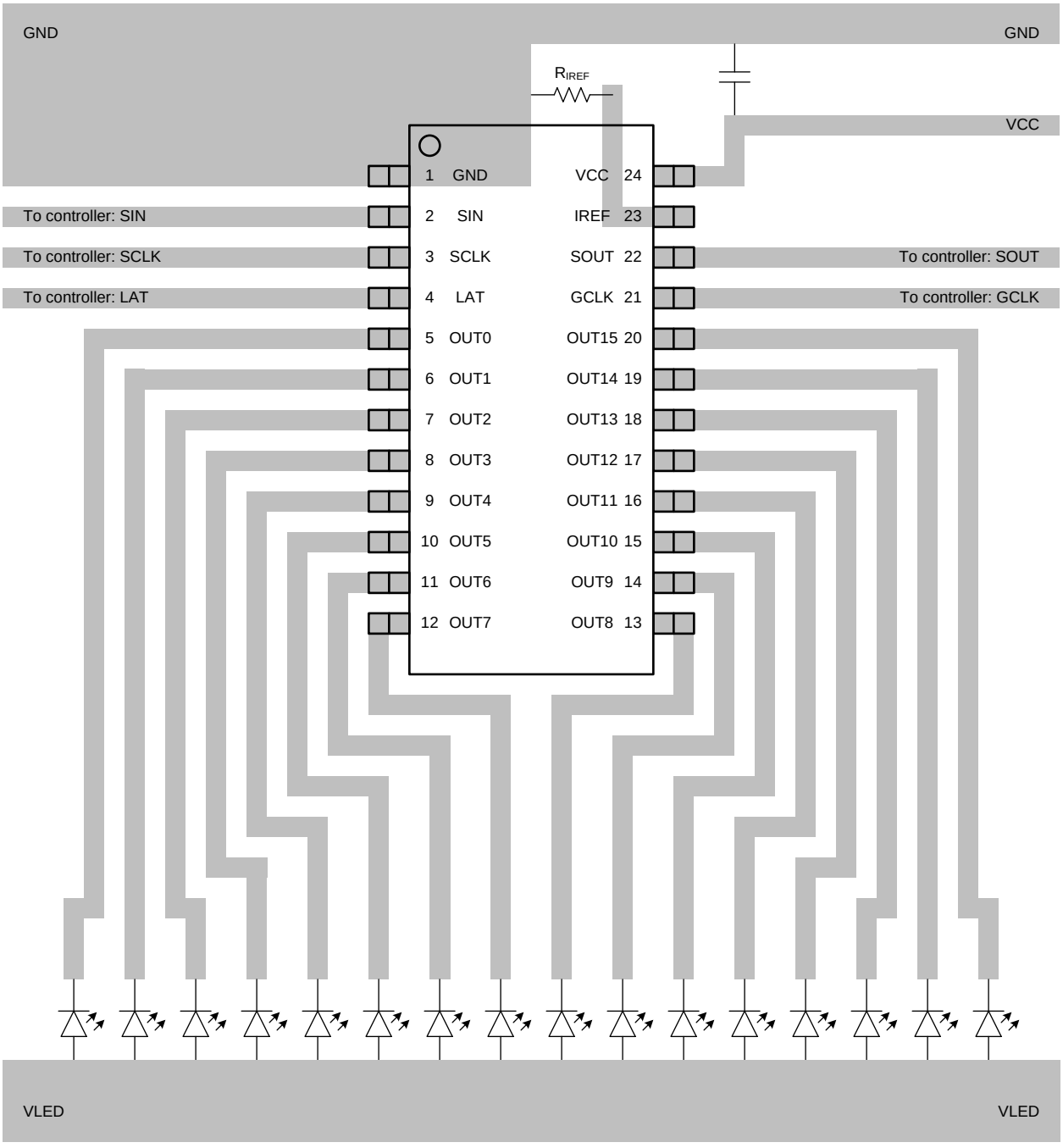

Copyright © 2017, Texas Instruments Incorporated

图 21. SSOP-24 Package Layout Example

Layout Examples (接下页)

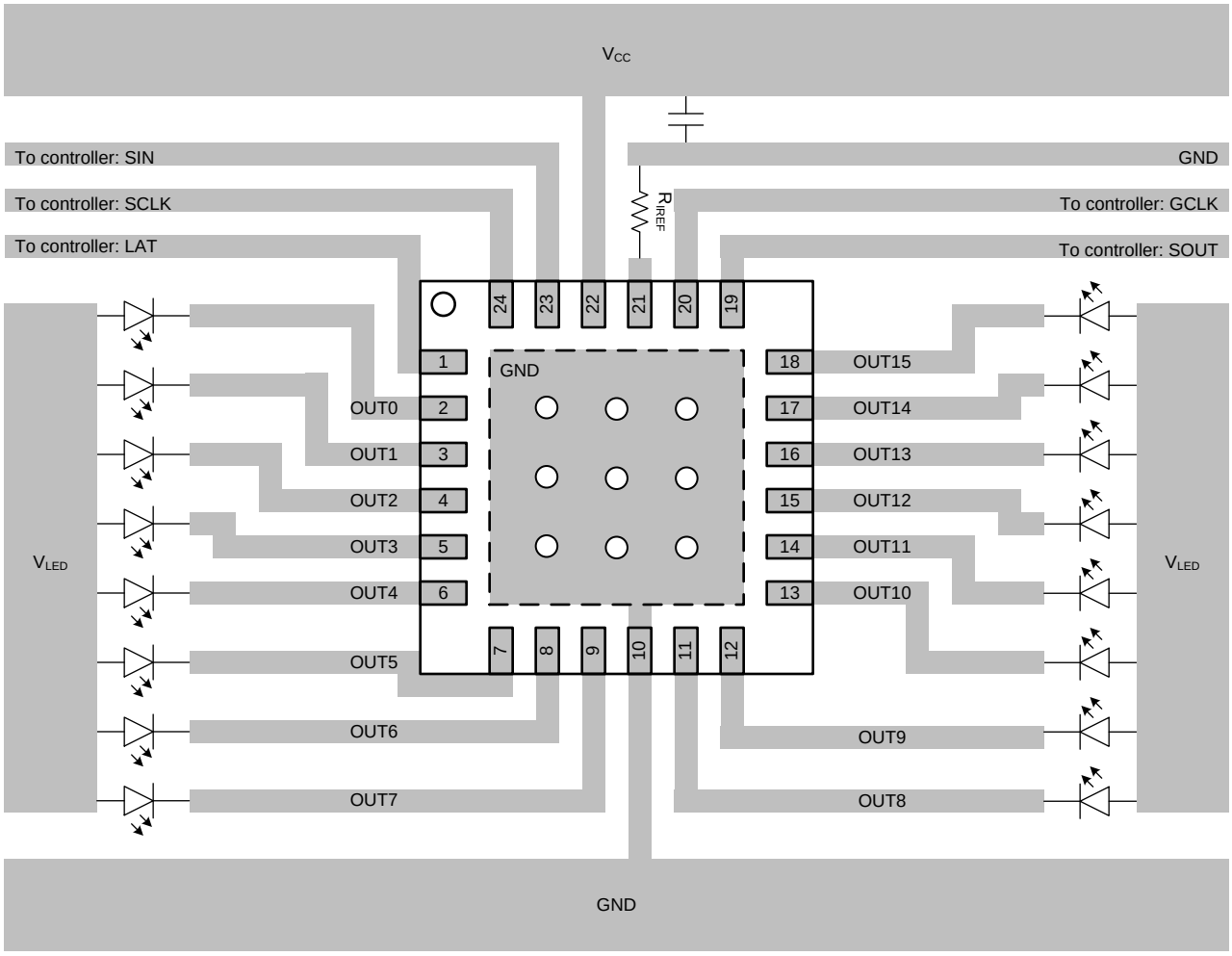

Copyright © 2018, Texas Instruments Incorporated

图 22. VQFN-24 Package Layout Example

版权 © 2018–2019, Texas Instruments Incorporated

13 器件和文档支持

13.1 文档支持

13.1.1 相关文档

请参阅如下相关文档：

- *《TLC694x 16 通道 LED 驱动器技术参考手册》*
- *《半导体和 IC 封装热指标》*

13.2 相关链接

表 4 列出了快速访问链接。类别包括技术文档、支持和社区资源、工具与软件，以及立即订购快速访问。

表 4. 相关链接

器件	产品文件夹	立即订购	技术文档	工具与软件	支持和社区
TLC6946	请单击此处	请单击此处	请单击此处	请单击此处	请单击此处
TLC6948	请单击此处	请单击此处	请单击此处	请单击此处	请单击此处

13.3 接收文档更新通知

要接收文档更新通知，请导航至 TI.com.cn 上的器件产品文件夹。单击右上角的*通知我*进行注册，即可每周接收产品信息更改摘要。有关更改的详细信息，请查看任何已修订文档中包含的修订历史记录。

13.4 社区资源

下列链接提供到 TI 社区资源的连接。链接的内容由各个分销商“按照原样”提供。这些内容并不构成 TI 技术规范，并且不一定反映 TI 的观点；请参阅 TI 的 《使用条款》。

TI E2E™ 在线社区 ***TI 的工程师对工程师 (E2E) 社区。*** **此社区的创建目的在于促进工程师之间的协作。在 e2e.ti.com 中，您可以咨询问题、分享知识、拓展思路并与同行工程师一道帮助解决问题。**

设计支持 ***TI 参考设计支持*** **可帮助您快速查找有帮助的 E2E 论坛、设计支持工具以及技术支持的联系信息。**

13.5 商标

E2E is a trademark of Texas Instruments.
All other trademarks are the property of their respective owners.

13.6 静电放电警告



ESD 可能会损坏该集成电路。德州仪器 (TI) 建议通过适当的预防措施处理所有集成电路。如果不遵守正确的处理措施和安装程序，可能会损坏集成电路。

ESD 的损坏小至导致微小的性能降级，大至整个器件故障。 精密的集成电路可能更容易受到损坏，这是因为非常细微的参数更改都可能会导致器件与其发布的规格不相符。

13.7 术语表

SLYZ022 — *TI 术语表*。

这份术语表列出并解释术语、缩写和定义。

14 机械、封装和可订购信息

以下页面包含机械、封装和可订购信息。这些信息是适用于指定器件的最新数据。数据如有变更，恕不另行通知，且不会对此文档进行修订。如需获取此数据表的浏览器版本，请查看左侧的导航面板。

PACKAGING INFORMATION

Orderable Device	Status (1)	Package Type	Package Drawing	Pins	Package Qty	Eco Plan (2)	Lead finish/ Ball material (6)	MSL Peak Temp (3)	Op Temp (°C)	Device Marking (4/5)	Samples
TLC6946DBQR	ACTIVE	SSOP	DBQ	24	2500	RoHS & Green	NIPDAU	Level-3-260C-168 HR	-40 to 85	TLC6946	Samples
TLC6946RGER	ACTIVE	VQFN	RGE	24	3000	RoHS & Green	NIPDAU	Level-1-260C-UNLIM	-40 to 85	TLC 6946	Samples
TLC6948DBQR	ACTIVE	SSOP	DBQ	24	2500	RoHS & Green	NIPDAU	Level-3-260C-168 HR	-40 to 85	TLC6948	Samples
TLC6948RGER	ACTIVE	VQFN	RGE	24	3000	RoHS & Green	NIPDAU	Level-1-260C-UNLIM	-40 to 85	TLC 6948	Samples

(1) The marketing status values are defined as follows:
ACTIVE: Product device recommended for new designs.
LIFEBUY: TI has announced that the device will be discontinued, and a lifetime-buy period is in effect.
NRND: Not recommended for new designs. Device is in production to support existing customers, but TI does not recommend using this part in a new design.
PREVIEW: Device has been announced but is not in production. Samples may or may not be available.
OBSOLETE: TI has discontinued the production of the device.

(2) **RoHS:** TI defines "RoHS" to mean semiconductor products that are compliant with the current EU RoHS requirements for all 10 RoHS substances, including the requirement that RoHS substance do not exceed 0.1% by weight in homogeneous materials. Where designed to be soldered at high temperatures, "RoHS" products are suitable for use in specified lead-free processes. TI may reference these types of products as "Pb-Free".
RoHS Exempt: TI defines "RoHS Exempt" to mean products that contain lead but are compliant with EU RoHS pursuant to a specific EU RoHS exemption.
Green: TI defines "Green" to mean the content of Chlorine (Cl) and Bromine (Br) based flame retardants meet JS709B low halogen requirements of <=1000ppm threshold. Antimony trioxide based flame retardants must also meet the <=1000ppm threshold requirement.

(3) MSL, Peak Temp. - The Moisture Sensitivity Level rating according to the JEDEC industry standard classifications, and peak solder temperature.

(4) There may be additional marking, which relates to the logo, the lot trace code information, or the environmental category on the device.

(5) Multiple Device Markings will be inside parentheses. Only one Device Marking contained in parentheses and separated by a "~" will appear on a device. If a line is indented then it is a continuation of the previous line and the two combined represent the entire Device Marking for that device.

(6) Lead finish/Ball material - Orderable Devices may have multiple material finish options. Finish options are separated by a vertical ruled line. Lead finish/Ball material values may wrap to two lines if the finish value exceeds the maximum column width.

Important Information and Disclaimer: The information provided on this page represents TI's knowledge and belief as of the date that it is provided. TI bases its knowledge and belief on information provided by third parties, and makes no representation or warranty as to the accuracy of such information. Efforts are underway to better integrate information from third parties. TI has taken and

continues to take reasonable steps to provide representative and accurate information but may not have conducted destructive testing or chemical analysis on incoming materials and chemicals.
TI and TI suppliers consider certain information to be proprietary, and thus CAS numbers and other limited information may not be available for release.

In no event shall TI's liability arising out of such information exceed the total purchase price of the TI part(s) at issue in this document sold by TI to Customer on an annual basis.

TAPE AND REEL INFORMATION

REEL DIMENSIONS

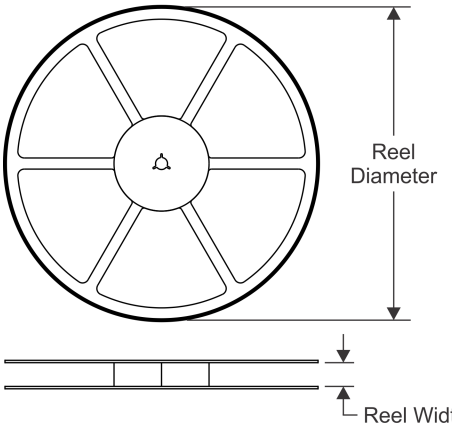

TAPE DIMENSIONS

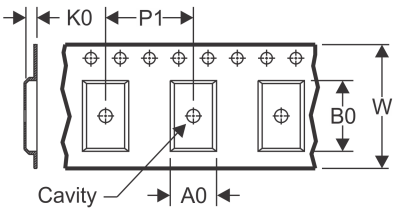

A0	Dimension designed to accommodate the component width
B0	Dimension designed to accommodate the component length
K0	Dimension designed to accommodate the component thickness
W	Overall width of the carrier tape
P1	Pitch between successive cavity centers

QUADRANT ASSIGNMENTS FOR PIN 1 ORIENTATION IN TAPE

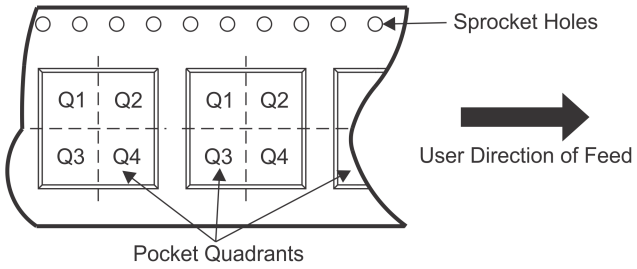

*All dimensions are nominal

Device	Package Type	Package Drawing	Pins	SPQ	Reel Diameter (mm)	Reel Width W1 (mm)	A0 (mm)	B0 (mm)	K0 (mm)	P1 (mm)	W (mm)	Pin1 Quadrant
TLC6946DBQR	SSOP	DBQ	24	2500	330.0	16.4	6.5	9.0	2.1	8.0	16.0	Q1
TLC6946RGER	VQFN	RGE	24	3000	330.0	12.4	4.25	4.25	1.15	8.0	12.0	Q2
TLC6948DBQR	SSOP	DBQ	24	2500	330.0	16.4	6.5	9.0	2.1	8.0	16.0	Q1
TLC6948RGER	VQFN	RGE	24	3000	330.0	12.4	4.25	4.25	1.15	8.0	12.0	Q2

TAPE AND REEL BOX DIMENSIONS

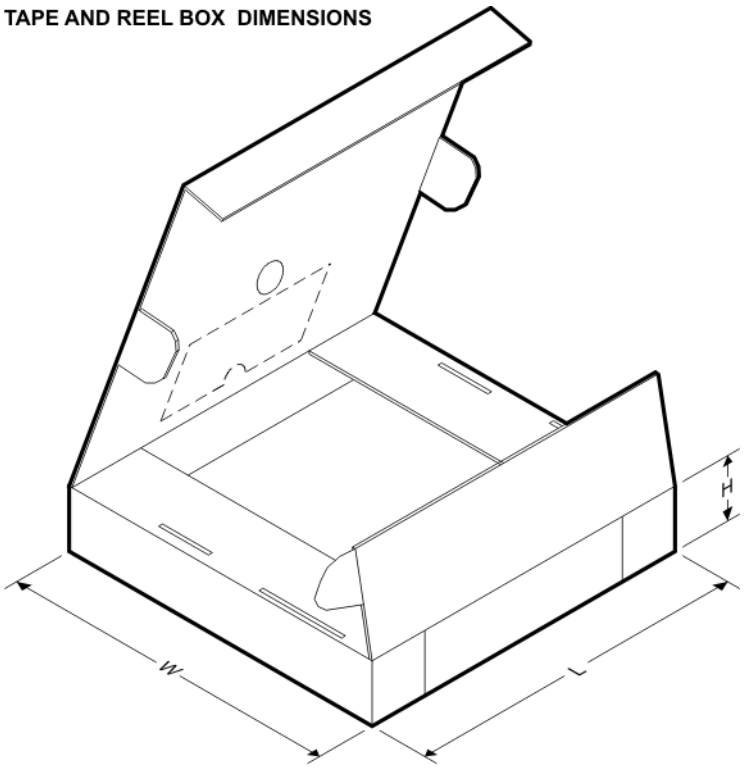

*All dimensions are nominal

Device	Package Type	Package Drawing	Pins	SPQ	Length (mm)	Width (mm)	Height (mm)
TLC6946DBQR	SSOP	DBQ	24	2500	853.0	449.0	35.0
TLC6946RGER	VQFN	RGE	24	3000	367.0	367.0	35.0
TLC6948DBQR	SSOP	DBQ	24	2500	853.0	449.0	35.0
TLC6948RGER	VQFN	RGE	24	3000	367.0	367.0	35.0

GENERIC PACKAGE VIEW

RGE 24 VQFN - 1 mm max height

PLASTIC QUAD FLATPACK - NO LEAD

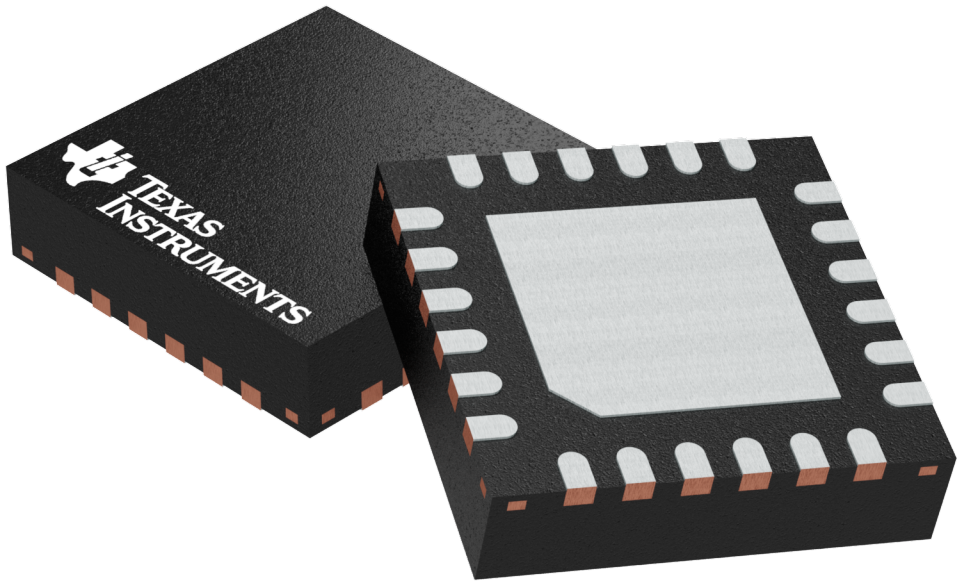

Images above are just a representation of the package family, actual package may vary.
Refer to the product data sheet for package details.

4204104/H

PACKAGE OUTLINE

RGE0024H

VQFN - 1 mm max height

PLASTIC QUAD FLATPACK- NO LEAD

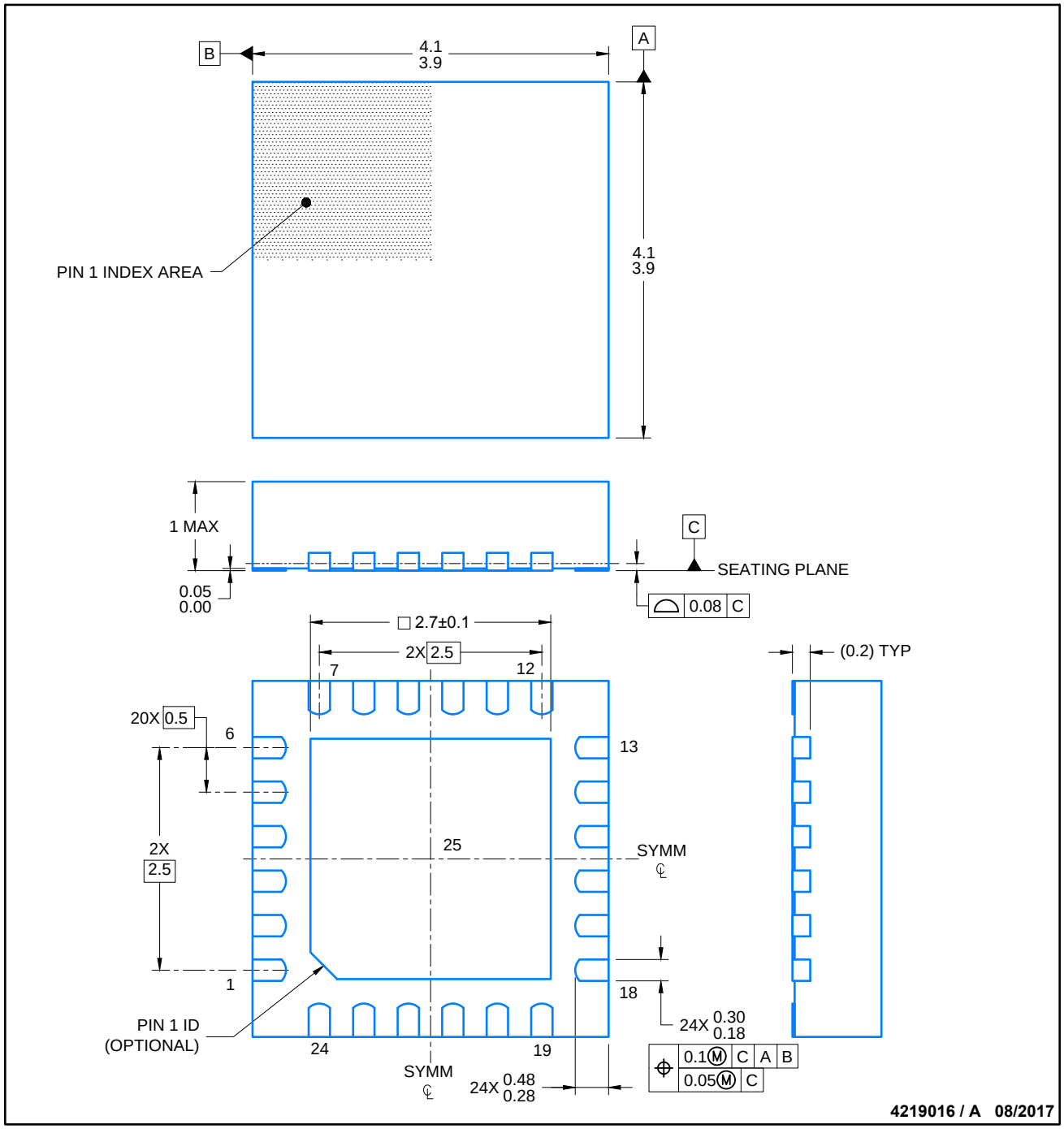

NOTES:

1. All linear dimensions are in millimeters. Any dimensions in parenthesis are for reference only. Dimensioning and tolerancing per ASME Y14.5M.
2. This drawing is subject to change without notice.
3. The package thermal pad must be soldered to the printed circuit board for thermal and mechanical performance.

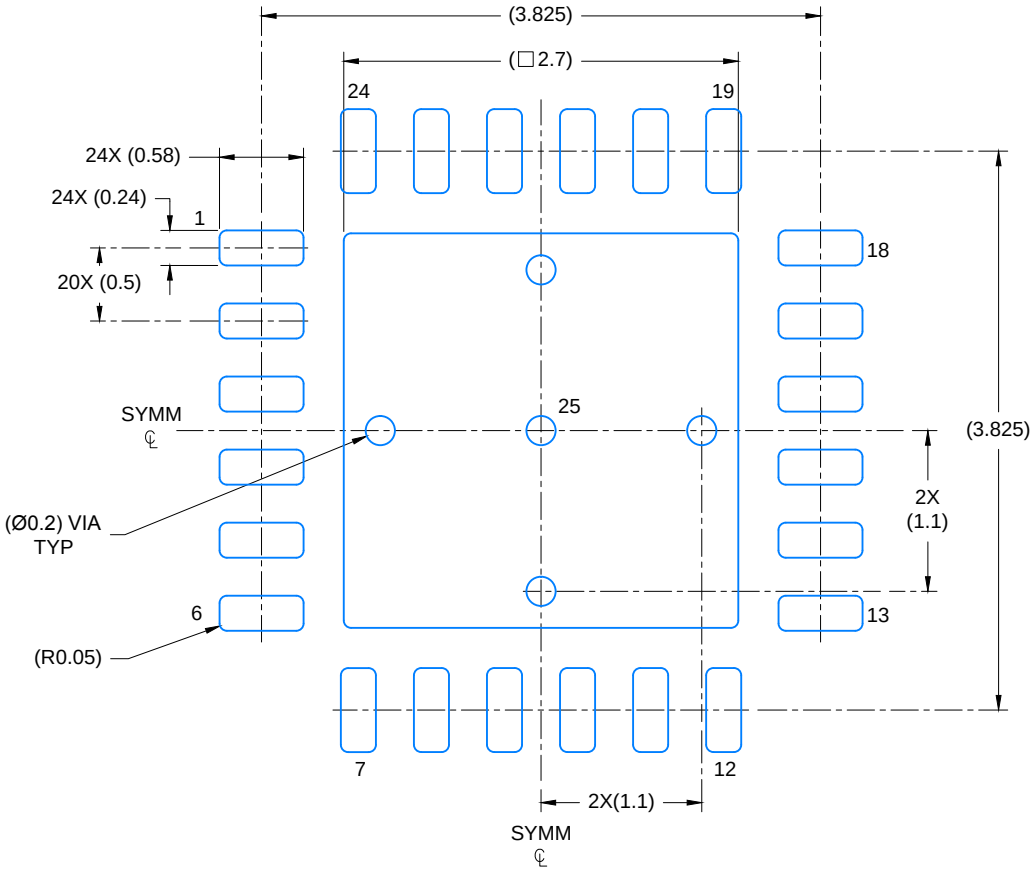

LAND PATTERN EXAMPLE

SCALE: 20X

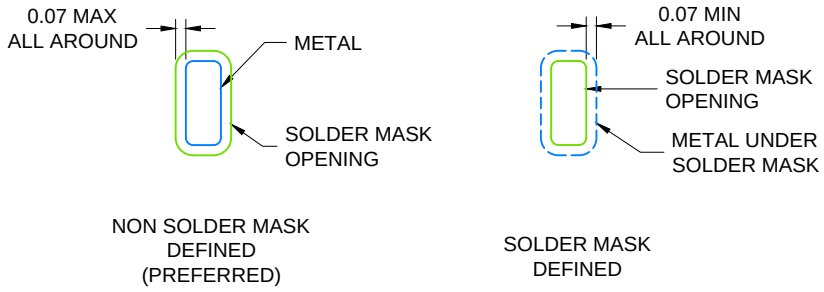

SOLDER MASK DETAILS

4219016 / A 08/2017

NOTES: (continued)

4. This package is designed to be soldered to a thermal pad on the board. For more information, see Texas Instruments literature number SLUA271 (www.ti.com/lit/slua271).
5. Solder mask tolerances between and around signal pads can vary based on board fabrication site.

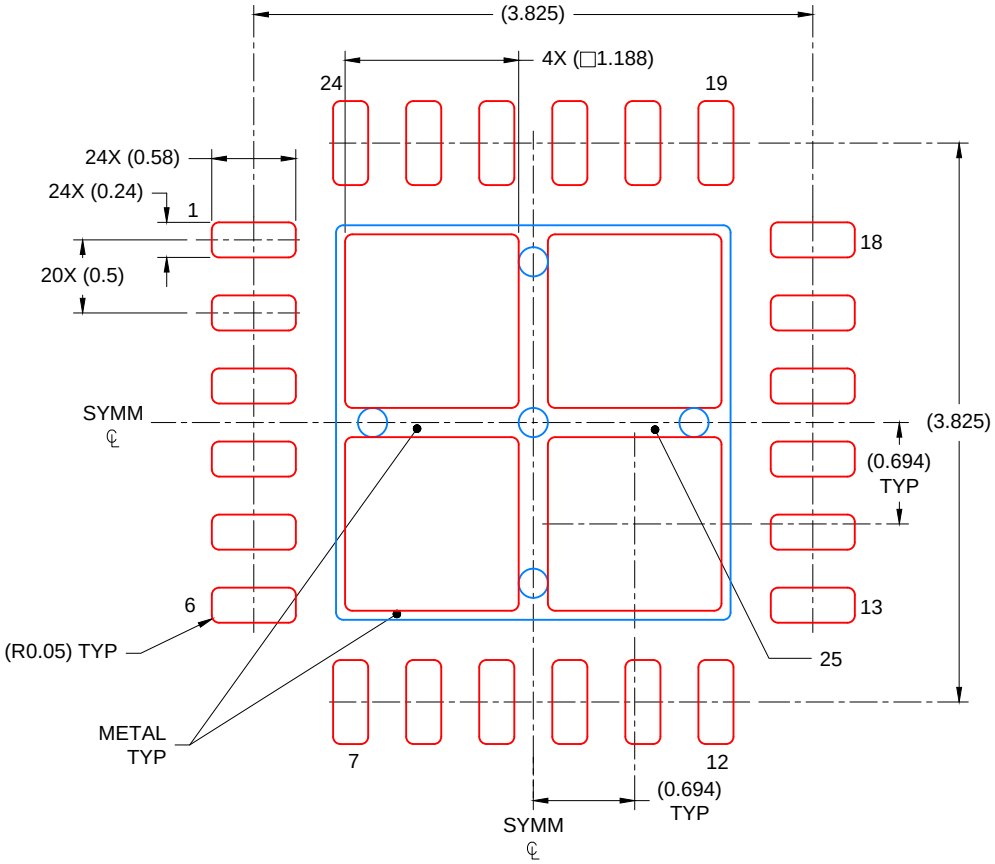

SOLDER PASTE EXAMPLE
BASED ON 0.125 mm THICK STENCIL

EXPOSED PAD
78% PRINTED COVERAGE BY AREA
SCALE: 20X

4219016 / A 08/2017

NOTES: (continued)

6. Laser cutting apertures with trapezoidal walls and rounded corners may offer better paste release. IPC-7525 may have alternate design recommendations..

DBQ (R–PDSO–G24) PLASTIC SMALL–OUTLINE PACKAGE

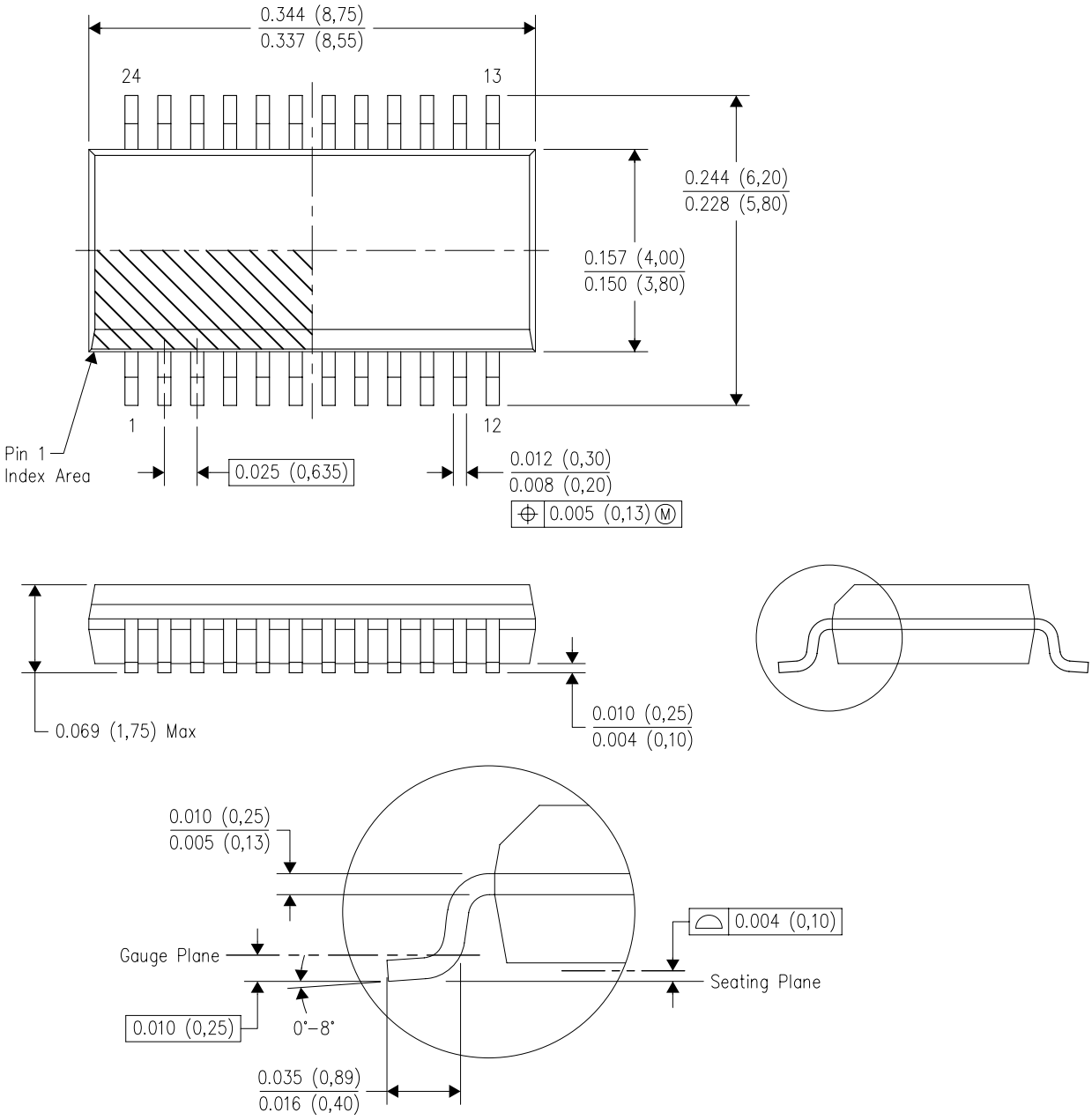

NOTES:
A. All linear dimensions are in inches (millimeters).
B. This drawing is subject to change without notice.
C. Body dimensions do not include mold flash or protrusion not to exceed 0.006 (0,15) per side.
D. Falls within JEDEC MO–137 variation AE.

重要声明和免责声明

TI 提供技术和可靠性数据（包括数据表）、设计资源（包括参考设计）、应用或其他设计建议、网络工具、安全信息和其他资源，不保证没有瑕疵且不做出任何明示或暗示的担保，包括但不限于对适销性、某特定用途方面的适用性或不侵犯任何第三方知识产权的暗示担保。

这些资源可供使用 TI 产品进行设计的熟练开发人员使用。您将自行承担以下全部责任：(1) 针对您的应用选择合适的 TI 产品，(2) 设计、验证并测试您的应用，(3) 确保您的应用满足相应标准以及任何其他安全、安保或其他要求。这些资源如有变更，恕不另行通知。TI 授权您仅可将这些资源用于研发本资源所述的 TI 产品的应用。严禁对这些资源进行其他复制或展示。您无权使用任何其他 TI 知识产权或任何第三方知识产权。您应全额赔偿因在这些资源的使用中对 TI 及其代表造成的任何索赔、损害、成本、损失和债务，TI 对此概不负责。

TI 提供的产品受 TI 的销售条款 (https:www.ti.com.cn/zh-cn/legal/termsofsale.html) 或 ti.com.cn 上其他适用条款/TI 产品随附的其他适用条款的约束。TI 提供这些资源并不会扩展或以其他方式更改 TI 针对 TI 产品发布的适用的担保或担保免责声明。

邮寄地址：上海市浦东新区世纪大道 1568 号中建大厦 32 楼，邮政编码：200122
Copyright © 2021 德州仪器半导体技术（上海）有限公司