500-mA PEAK STEP-UP, STEP-DOWN, INVERTING SWITCHING VOLTAGE REGULATOR

SLVS009F − JUNE 1976 − REVISED FEBRUARY 2005

- **High Efficiency . . . 60% or Greater**
- **Peak Switch Current . . . 500 mA**
- **Input Current Limit Protection**
- **TTL-Compatible Inhibit**
- **Adjustable Output Voltage**
- **Input Regulation . . . 0.2% Typ**
- **Output Regulation . . . 0.4% Typ**
- **Soft Start-Up Capability**
- **Can be Used in Buck, Boost, and Inverting Configurations**

D, N, OR PW PACKAGE
(TOP VIEW)

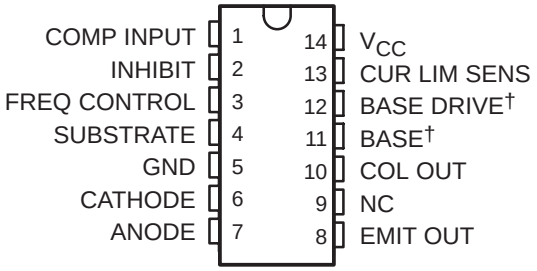

NC − No internal connection
† BASE (11) and BASE DRIVE (12) are used for device testing only. They normally are not used in circuit applications of the device.

description/ordering information

The TL497A incorporates all the active functions required in the construction of switching voltage regulators. It also can be used as the control element to drive external components for high-power-output applications. The TL497A was designed for ease of use in step-up, step-down, or voltage-inversion applications requiring high efficiency.

The TL497A is a fixed-on-time variable-frequency switching-voltage-regulator control circuit. The switch-on time is programmed by a single external capacitor connected between FREQ CONTROL and GND. This capacitor, C_T, is charged by an internal constant-current generator to a predetermined threshold. The charging current and the threshold vary proportionally with V_{CC}. Thus, the switch-on time remains constant over the specified range of input voltage (4.5 V to 12 V). Typical on times for various values of C_T are as follows:

TIMING CAPACITOR, C_T (pF)	200	250	350	400	500	750	1000	1500	2000
ON TIME (µs)	19	22	26	32	44	56	80	120	180

The output voltage is controlled by an external resistor ladder network (R1 and R2 in Figures 1, 2, and 3) that provides a feedback voltage to the comparator input. This feedback voltage is compared to the reference voltage of 1.2 V (relative to SUBSTRATE) by the high-gain comparator. When the output voltage decays below the value required to maintain 1.2 V at the comparator input, the comparator enables the oscillator circuit, which charges and discharges C_T as described above. The internal pass transistor is driven on during the charging of C_T. The internal transistor can be used directly for switching currents up to 500 mA. Its collector and emitter are uncommitted, and it is current driven to allow operation from the positive supply voltage or ground. An internal Schottky diode matched to the current characteristics of the internal transistor also is available for blocking or commutating purposes. The TL497A also has on-chip current-limit circuitry that senses the peak currents in the switching regulator and protects the inductor against saturation and the pass transistor against overstress. The current limit is adjustable and is programmed by a single sense resistor, R_{CL}, connected between V_{CC} and CUR LIM SENS. The current-limit circuitry is activated when 0.7 V is developed across R_{CL}. External gating is provided by the INHIBIT input. When the INHIBIT input is high, the output is turned off.

Simplicity of design is a primary feature of the TL497A. With only six external components (three resistors, two capacitors, and one inductor), the TL497A operates in numerous voltage-conversion applications (step-up, step-down, invert) with as much as 85% of the source power delivered to the load. The TL497A replaces the TL497 in all applications.

The TL497AC is characterized for operation from 0°C to 70°C. The TL497AI is characterized for operation from −40°C to 85°C.

Please be aware that an important notice concerning availability, standard warranty, and use in critical applications of Texas Instruments semiconductor products and disclaimers thereto appears at the end of this data sheet.

PRODUCTION DATA information is current as of publication date. Products conform to specifications per the terms of Texas Instruments standard warranty. Production processing does not necessarily include testing of all parameters.

Copyright © 2005, Texas Instruments Incorporated

AVAILABLE OPTIONS

T_A	PACKAGED DEVICES			CHIP FORM (Y)
	SMALL-OUTLINE (D)	PLASTIC DIP (N)	SHRINK SMALL-OUTLINE (PW)	
0°C to 70°C	TL497ACD	TL497ACN	TL497ACPW	TL497AY
−40°C to 85°C	TL497AID	TL497AIN	—	—

The D and PW packages are only taped and reeled. Add the suffix R to the device type (e.g., TL497ACPWR). Chip forms are tested at 25°C.

functional block diagram

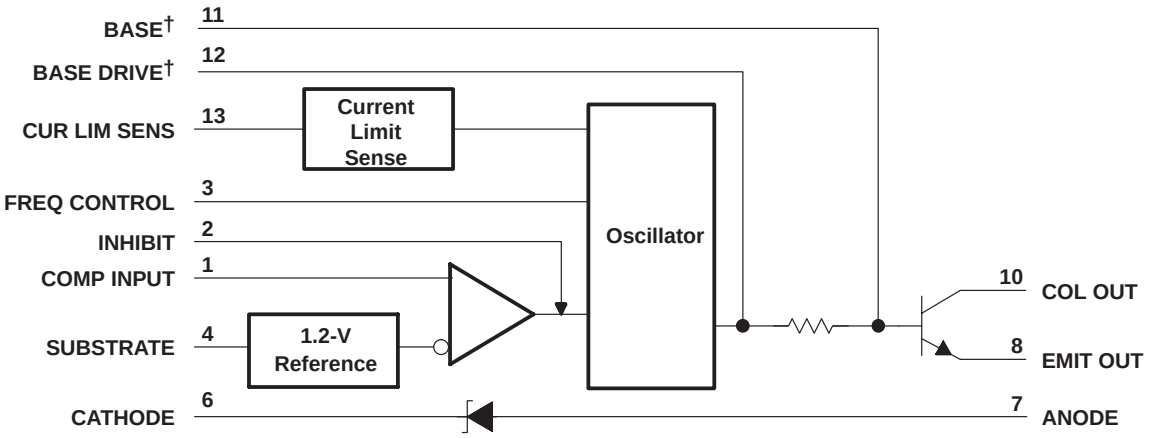

† BASE and BASE DRIVE are used for device testing only. They normally are not used in circuit applications of the device.

absolute maximum ratings over operating free-air temperature range (unless otherwise noted)†

Supply voltage, V_{CC} (see Note 1) . . . . . 15 V
Output voltage, V_O . . . . . 35 V
Input voltage, V_I(COMP INPUT) . . . . . 5 V
Input voltage, V_I(INHIBIT) . . . . . 5 V
Diode reverse voltage . . . . . 35 V
Power switch current . . . . . 750 mA
Diode forward current . . . . . 750 mA
Package thermal impedance, θ_{JA} (see Notes 2 and 3): D package . . . . . 86°C/W
N package . . . . . 101°C/W
PW package . . . . . 113°C/W
Lead temperature 1,6 mm (1/16 inch) from case for 60 seconds . . . . . 260°C
Storage temperature range, T_{stg} . . . . . −65°C to 150°C

†Stresses beyond those listed under “absolute maximum ratings” may cause permanent damage to the device. These are stress ratings only, and functional operation of the device at these or any other conditions beyond those indicated under “recommended operating conditions” is not implied. Exposure to absolute-maximum-rated conditions for extended periods may affect device reliability.

NOTES:
1. All voltage values, except diode voltages, are with respect to network ground terminal.
2. Maximum power dissipation is a function of T_J(max), θ_{JA}, and T_A. The maximum allowable power dissipation at any allowable ambient temperature is $P_D = (T_J(max) - T_A)/\theta_{JA}$. Operating at the absolute maximum T_J of 150°C can impact reliability.
3. The package thermal impedance is calculated in accordance with JESD 51, except for through-hole packages, which use a trace length of zero.

recommended operating conditions

			MIN	MAX	UNIT
Supply voltage, V_{CC}			4.5	12	V
High-level input voltage, V_{IH}	INHIBIT pin		2.5		V
Low-level input voltage, V_{IL}	INHIBIT pin			0.8	V
Output voltage	Step-up configuration (see Figure 1)		$V_I + 2$	30	V
	Step-down configuration (see Figure 2)		V_{ref}	$V_I - 1$	
	Inverting regulator (see Figure 3)		$-V_{ref}$	−25	
Power switch current				500	mA
Diode forward current				500	mA
Operating free-air temperature range, T_A		TL497AC	0	70	°C
		TL497AI	−40	85	

electrical characteristics over recommended operating conditions, V_{CC} = 6 V (unless otherwise noted)

PARAMETER	TEST CONDITIONS		T_A†	TL497AC			TL497AI			UNIT
				MIN	TYP‡	MAX	MIN	TYP‡	MAX	
High-level input current, INHIBIT	$V_{I(I)}$ = 5 V		Full range		0.8	1.5		0.8	1.5	mA
Low-level input current, INHIBIT	$V_{I(I)}$ = 0 V		Full range		5	10		5	20	µA
Comparator reference voltage	V_I = 4.5 V to 6 V		Full range	1.08	1.2	1.32	1.14	1.2	1.26	V
Comparator input bias current	V_I = 6 V		Full range		40	100		40	100	µA
Switch on-state voltage	V_I = 4.5 V	I_O = 100 mA	25°C		0.13	0.2		0.13	0.2	V
		I_O = 500 mA	Full range			0.85			1	
Switch off-state current	V_I = 4.5 V, V_O = 30 V		25°C		10	50		10	50	µA
			Full range			200			500	
Sense voltage, CUR LIM SENS	V_I = 6 V		25°C	0.45		1	0.45		1	V
Diode forward voltage	I_O = 10 mA		Full range		0.75	0.85		0.75	0.95	V
	I_O = 100 mA		Full range		0.9	1		0.9	1.1	
	I_O = 500 mA		Full range		1.33	1.55		1.33	1.75	
Diode reverse voltage	I_O = 500 µA		Full range				30			V
	I_O = 200 µA		Full range	30						
On-state supply current			25°C		11	14		11	14	mA
			Full range			15			16	
Off-state supply current			25°C		6	9		6	9	mA
			Full range			10			11	

† Full range is 0°C to 70°C for the TL497AC and −40°C to 85°C for the TL497AI.
‡ All typical values are at T_A = 25°C.

electrical characteristics over recommended operating conditions, V_{CC} = 6 V, T_A = 25°C (unless otherwise noted)

PARAMETER	TEST CONDITIONS		TL497AY			UNIT
			MIN	TYP	MAX	
High-level input current, INHIBIT	$V_{I(I)}$ = 5 V			0.8		mA
Low-level input current, INHIBIT	$V_{I(I)}$ = 0 V			5		µA
Comparator reference voltage	V_I = 4.5 V to 6 V			1.2		V
Comparator input bias current	V_I = 6 V			40		µA
Switch on-state voltage	V_I = 4.5 V,	I_O = 100 mA		0.13		V
Switch off-state current	V_I = 4.5 V,	V_O = 30 V		10		µA
Diode forward voltage	I_O = 10 mA			0.75		V
	I_O = 100 mA			0.9		
	I_O = 500 mA			1.33		
On-state supply current				11		mA
Off-state supply current				6		mA

APPLICATION INFORMATION

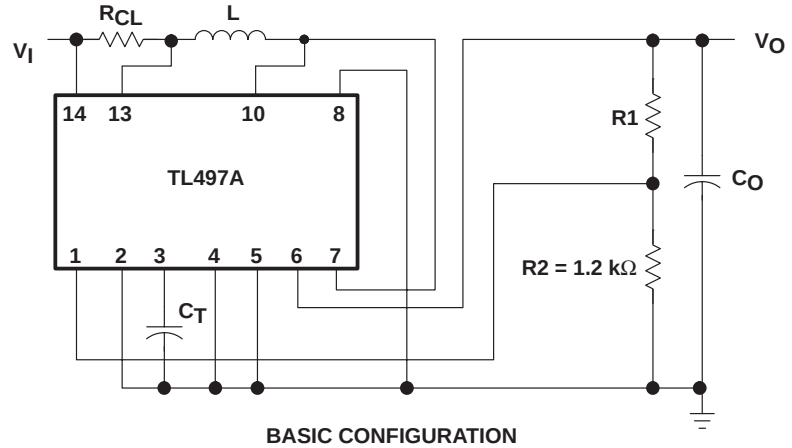

BASIC CONFIGURATION
(Peak Switching Current = $I_{(PK)}$ < 500 mA)

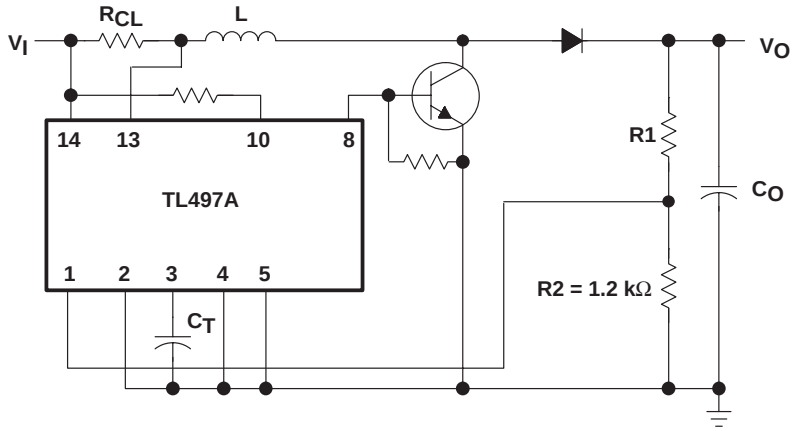

EXTENDED POWER CONFIGURATION
(using external transistor)

DESIGN EQUATIONS

- $I_{(PK)} = 2\, I_O \max\left[\frac{V_O}{V_I}\right]$
- $L\ (\mu H) = \frac{V_I}{I_{(PK)}} t_{on}\ (\mu s)$

Choose L (50 to 500 μH), calculate t_{on} (25 to 150 μs)

- $C_T (pF) \approx 12\, t_{on}\ (\mu s)$
- $R1 = (V_O - 1.2\ V)\ k\Omega$
- $R_{CL} = \frac{0.5\ V}{I_{(PK)}}$
- $C_O\ (\mu F) \approx t_{on} (\mu s) \frac{\left[\frac{V_I}{V_O} I_{(PK)} + I_O\right]}{V_{ripple}\ (PK)}$

Figure 1. Positive Regulator, Step-Up Configurations

APPLICATION INFORMATION

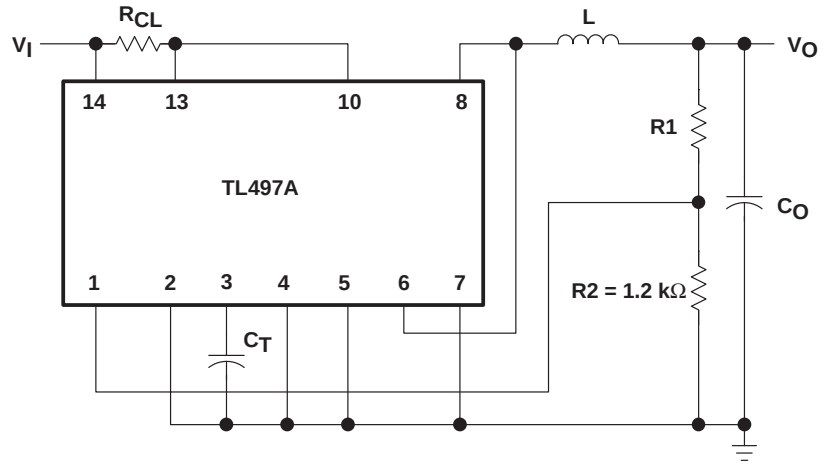

BASIC CONFIGURATION
(Peak Switching Current = $I_{(PK)}$ < 500 mA)

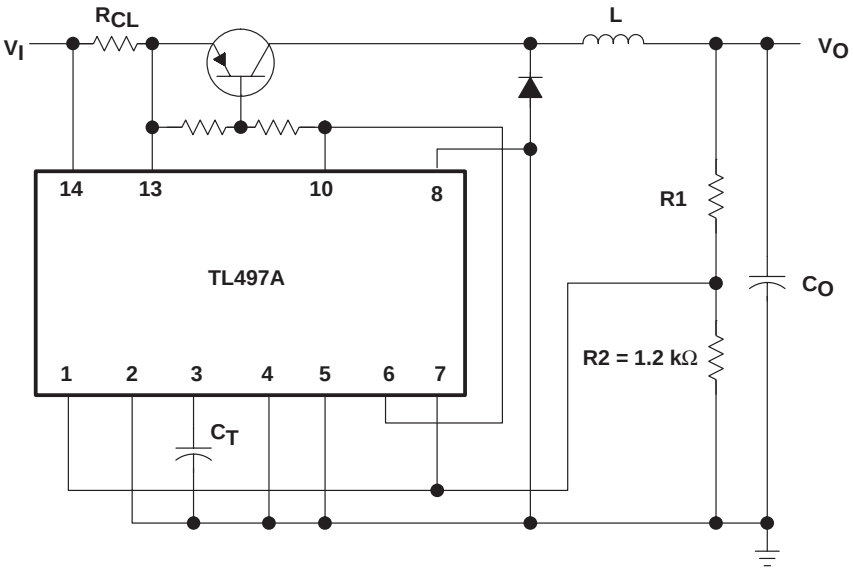

EXTENDED POWER CONFIGURATION
(using external transistor)

DESIGN EQUATIONS

- $I_{(PK)} = 2\, I_O\, max$
- $L\ (\mu H) = \dfrac{V_I - V_O}{I_{(PK)}}\, t_{on}(\mu s)$

Choose L (50 to 500 μH), calculate t_{on} (10 to 150 μs)

- $C_T(pF) \approx 12\, t_{on}(\mu s)$
- $R1 = (V_O - 1.2\ V)\ k\Omega$
- $R_{CL} = \dfrac{0.5\ V}{I_{(PK)}}$
- $C_O\ (\mu F) \approx t_{on}(\mu s) \dfrac{\left[\dfrac{V_I - V_O}{V_O}\, I_{(PK)} + I_O\right]}{V_{ripple}\ (PK)}$

Figure 2. Positive Regulator, Step-Down Configurations

APPLICATION INFORMATION

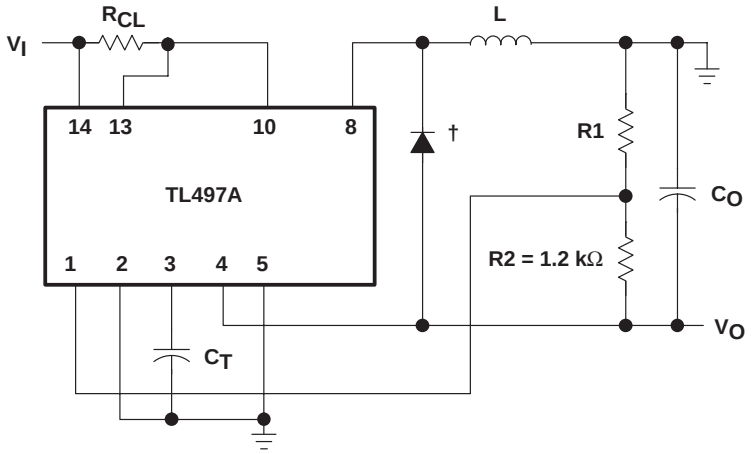

BASIC CONFIGURATION
(Peak Switching Current = $I_{(PK)}$ < 500 mA)

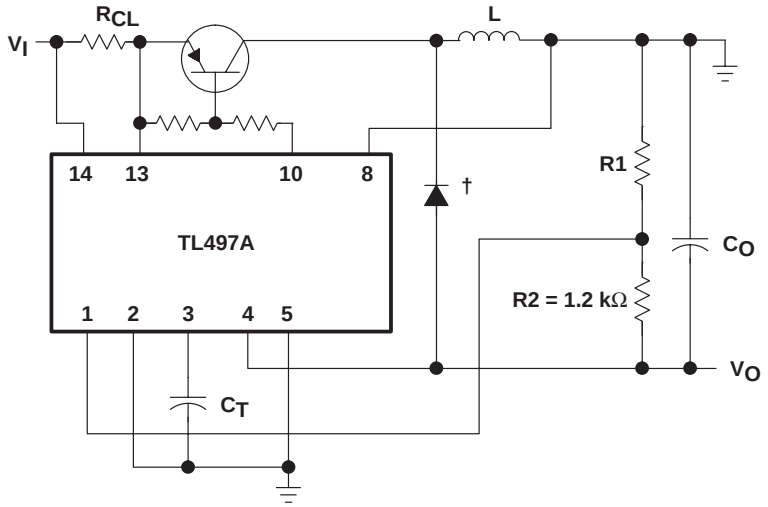

EXTENDED POWER CONFIGURATION
(using external transistor)

† Use external catch diode, e.g., 1N4001, when building an inverting supply with the TL497A.

DESIGN EQUATIONS

- $I_{(PK)} = 2\, I_O \max\left[1 + \frac{|V_O|}{V_I}\right]$
- $L\ (\mu H) = \frac{V_I}{I_{(PK)}} t_{on}(\mu s)$

Choose L (50 to 500 μH), calculate t_{on} (10 to 150 μs)

- $C_T(pF) \approx 12\, t_{on}(\mu s)$
- $R1 = \left(|V_O| - 1.2\ V\right) k\Omega$

  $R_{CL} = \frac{0.5\ V}{I_{(PK)}}$
- $C_O\ (\mu F) \approx t_{on}(\mu s) \frac{\left[\frac{V_I}{|V_O|} I_{(PK)} + I_O\right]}{V_{ripple}\ (PK)}$

Figure 3. Inverting Applications

APPLICATION INFORMATION

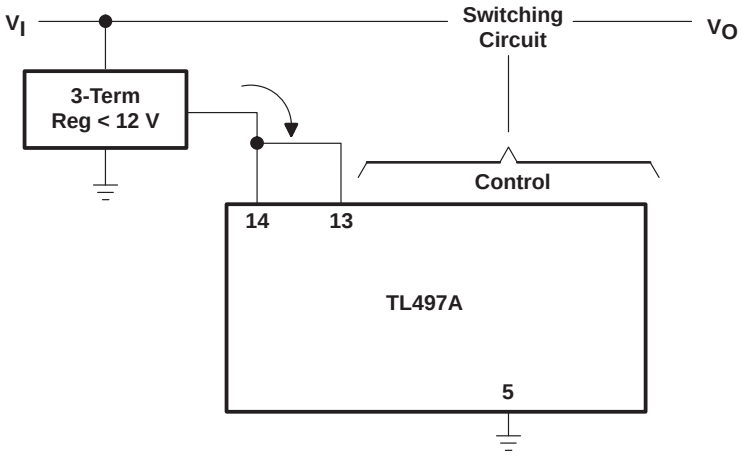

EXTENDED INPUT CONFIGURATION WITHOUT CURRENT LIMIT

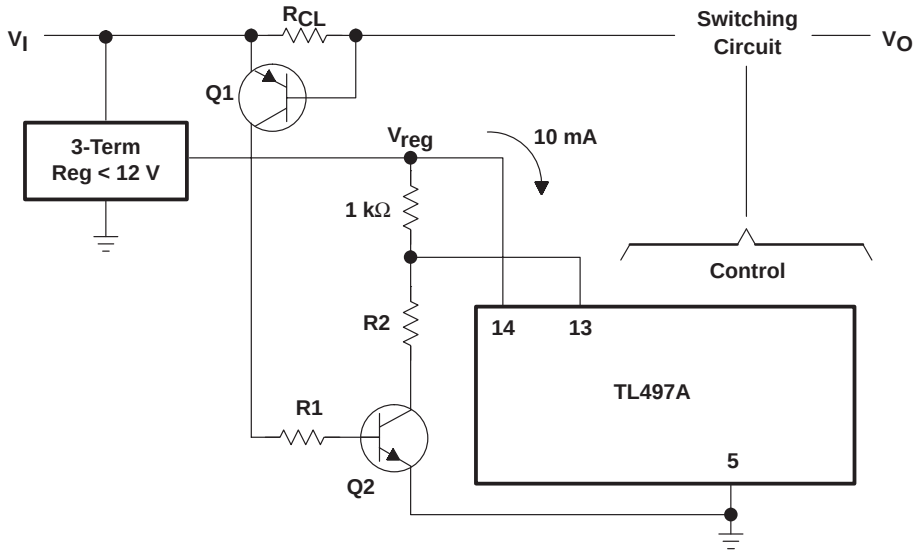

DESIGN EQUATIONS

- $R_{CL} = \frac{V_{BE(Q1)}}{I_{limit\ (PK)}}$
- $R1 + \frac{V_I}{I_{B(Q2)}}$
- $R2 = \left(V_{reg} - 1\right) 10\ k\Omega$

CURRENT LIMIT FOR EXTENDED INPUT CONFIGURATION

Figure 4. Extended Input Voltage Range (V_I > 12 V)

PACKAGING INFORMATION

Orderable Device	Status (1)	Package Type	Package Drawing	Pins	Package Qty	Eco Plan (2)	Lead finish/ Ball material (6)	MSL Peak Temp (3)	Op Temp (°C)	Device Marking (4/5)	Samples
TL497ACD	ACTIVE	SOIC	D	14	50	RoHS & Green	NIPDAU	Level-1-260C-UNLIM	0 to 70	TL497AC	Samples
TL497ACDR	ACTIVE	SOIC	D	14	2500	RoHS & Green	NIPDAU	Level-1-260C-UNLIM	0 to 70	TL497AC	Samples
TL497ACN	ACTIVE	PDIP	N	14	25	RoHS & Green	NIPDAU	N / A for Pkg Type	0 to 70	TL497ACN	Samples
TL497ACNE4	ACTIVE	PDIP	N	14	25	RoHS & Green	NIPDAU	N / A for Pkg Type	0 to 70	TL497ACN	Samples
TL497ACNSR	ACTIVE	SO	NS	14	2000	RoHS & Green	NIPDAU	Level-1-260C-UNLIM	0 to 70	TL497A	Samples
TL497ACPWR	ACTIVE	TSSOP	PW	14	2000	RoHS & Green	NIPDAU	Level-1-260C-UNLIM	0 to 70	T497A	Samples
TL497AID	ACTIVE	SOIC	D	14	50	RoHS & Green	NIPDAU	Level-1-260C-UNLIM	-40 to 85	TL497AI	Samples
TL497AIDR	ACTIVE	SOIC	D	14	2500	RoHS & Green	NIPDAU	Level-1-260C-UNLIM	-40 to 85	TL497AI	Samples
TL497AIN	ACTIVE	PDIP	N	14	25	RoHS & Green	NIPDAU	N / A for Pkg Type	-40 to 85	TL497AIN	Samples

(1) The marketing status values are defined as follows:
ACTIVE: Product device recommended for new designs.
LIFEBUY: TI has announced that the device will be discontinued, and a lifetime-buy period is in effect.
NRND: Not recommended for new designs. Device is in production to support existing customers, but TI does not recommend using this part in a new design.
PREVIEW: Device has been announced but is not in production. Samples may or may not be available.
OBSOLETE: TI has discontinued the production of the device.

(2) **RoHS:** TI defines "RoHS" to mean semiconductor products that are compliant with the current EU RoHS requirements for all 10 RoHS substances, including the requirement that RoHS substance do not exceed 0.1% by weight in homogeneous materials. Where designed to be soldered at high temperatures, "RoHS" products are suitable for use in specified lead-free processes. TI may reference these types of products as "Pb-Free".
RoHS Exempt: TI defines "RoHS Exempt" to mean products that contain lead but are compliant with EU RoHS pursuant to a specific EU RoHS exemption.
Green: TI defines "Green" to mean the content of Chlorine (Cl) and Bromine (Br) based flame retardants meet JS709B low halogen requirements of <=1000ppm threshold. Antimony trioxide based flame retardants must also meet the <=1000ppm threshold requirement.

(3) MSL, Peak Temp. - The Moisture Sensitivity Level rating according to the JEDEC industry standard classifications, and peak solder temperature.

(4) There may be additional marking, which relates to the logo, the lot trace code information, or the environmental category on the device.

(5) Multiple Device Markings will be inside parentheses. Only one Device Marking contained in parentheses and separated by a "~" will appear on a device. If a line is indented then it is a continuation of the previous line and the two combined represent the entire Device Marking for that device.

(6) Lead finish/Ball material - Orderable Devices may have multiple material finish options. Finish options are separated by a vertical ruled line. Lead finish/Ball material values may wrap to two lines if the finish value exceeds the maximum column width.

Important Information and Disclaimer: The information provided on this page represents TI's knowledge and belief as of the date that it is provided. TI bases its knowledge and belief on information provided by third parties, and makes no representation or warranty as to the accuracy of such information. Efforts are underway to better integrate information from third parties. TI has taken and continues to take reasonable steps to provide representative and accurate information but may not have conducted destructive testing or chemical analysis on incoming materials and chemicals. TI and TI suppliers consider certain information to be proprietary, and thus CAS numbers and other limited information may not be available for release.

In no event shall TI's liability arising out of such information exceed the total purchase price of the TI part(s) at issue in this document sold by TI to Customer on an annual basis.

TAPE AND REEL INFORMATION

REEL DIMENSIONS

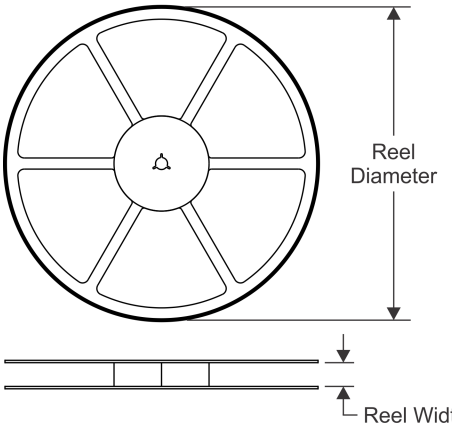

TAPE DIMENSIONS

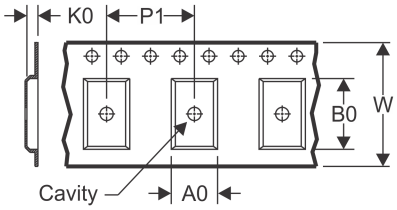

A0	Dimension designed to accommodate the component width
B0	Dimension designed to accommodate the component length
K0	Dimension designed to accommodate the component thickness
W	Overall width of the carrier tape
P1	Pitch between successive cavity centers

QUADRANT ASSIGNMENTS FOR PIN 1 ORIENTATION IN TAPE

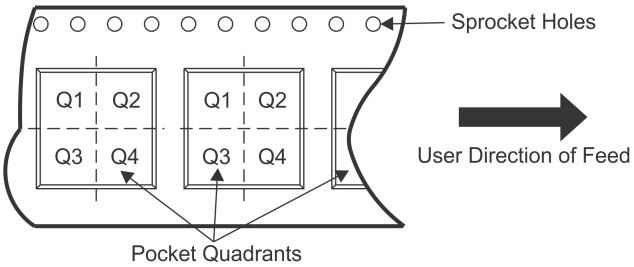

*All dimensions are nominal

Device	Package Type	Package Drawing	Pins	SPQ	Reel Diameter (mm)	Reel Width W1 (mm)	A0 (mm)	B0 (mm)	K0 (mm)	P1 (mm)	W (mm)	Pin1 Quadrant
TL497ACDR	SOIC	D	14	2500	330.0	16.4	6.5	9.0	2.1	8.0	16.0	Q1
TL497ACNSR	SO	NS	14	2000	330.0	16.4	8.2	10.5	2.5	12.0	16.0	Q1
TL497ACPWR	TSSOP	PW	14	2000	330.0	12.4	6.9	5.6	1.6	8.0	12.0	Q1
TL497AIDR	SOIC	D	14	2500	330.0	16.4	6.5	9.0	2.1	8.0	16.0	Q1

TAPE AND REEL BOX DIMENSIONS

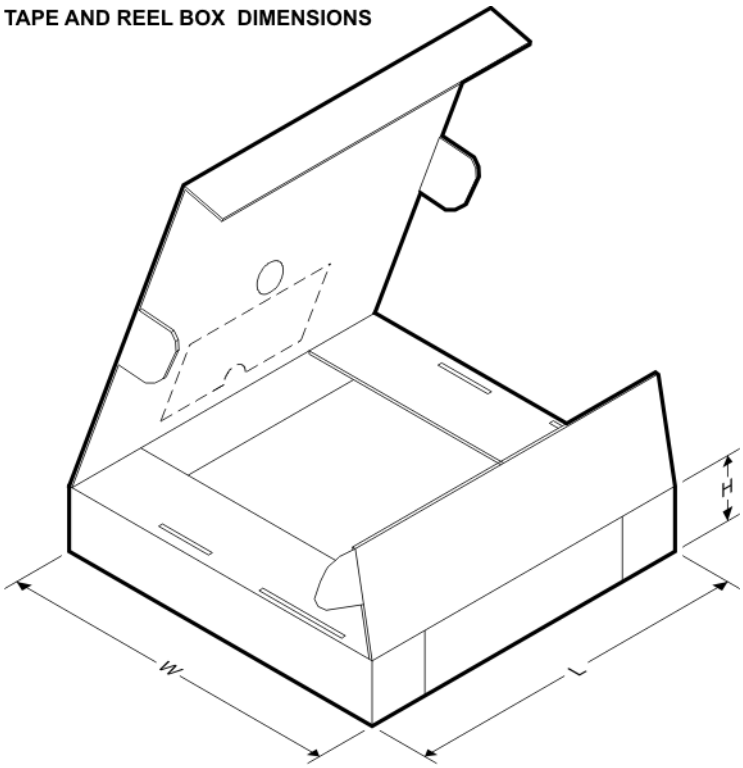

*All dimensions are nominal

Device	Package Type	Package Drawing	Pins	SPQ	Length (mm)	Width (mm)	Height (mm)
TL497ACDR	SOIC	D	14	2500	340.5	336.1	32.0
TL497ACNSR	SO	NS	14	2000	853.0	449.0	35.0
TL497ACPWR	TSSOP	PW	14	2000	853.0	449.0	35.0
TL497AIDR	SOIC	D	14	2500	340.5	336.1	32.0

TUBE

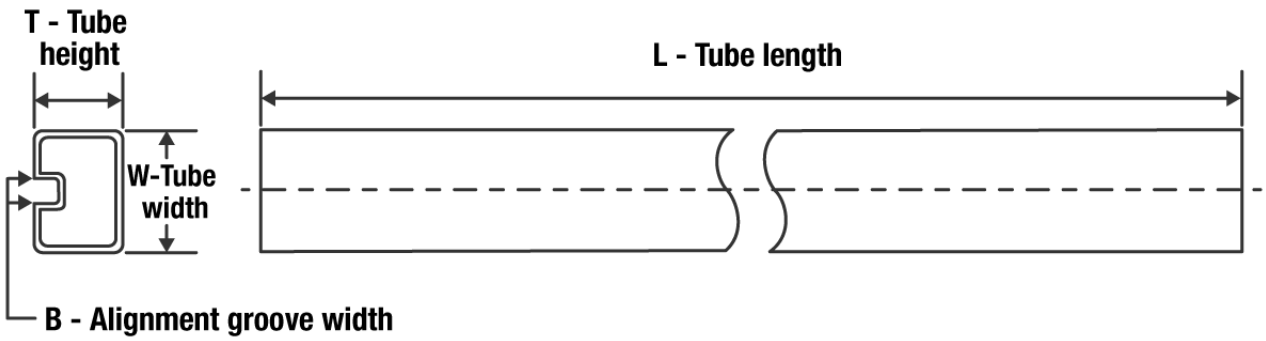

*All dimensions are nominal

Device	Package Name	Package Type	Pins	SPQ	L (mm)	W (mm)	T (µm)	B (mm)
TL497ACD	D	SOIC	14	50	507	8	3940	4.32
TL497ACN	N	PDIP	14	25	506	13.97	11230	4.32
TL497ACN	N	PDIP	14	25	506	13.97	11230	4.32
TL497ACNE4	N	PDIP	14	25	506	13.97	11230	4.32
TL497ACNE4	N	PDIP	14	25	506	13.97	11230	4.32
TL497AID	D	SOIC	14	50	507	8	3940	4.32
TL497AIN	N	PDIP	14	25	506	13.97	11230	4.32

MECHANICAL DATA

NS (R-PDSO-G)** **PLASTIC SMALL-OUTLINE PACKAGE**

14-PINS SHOWN

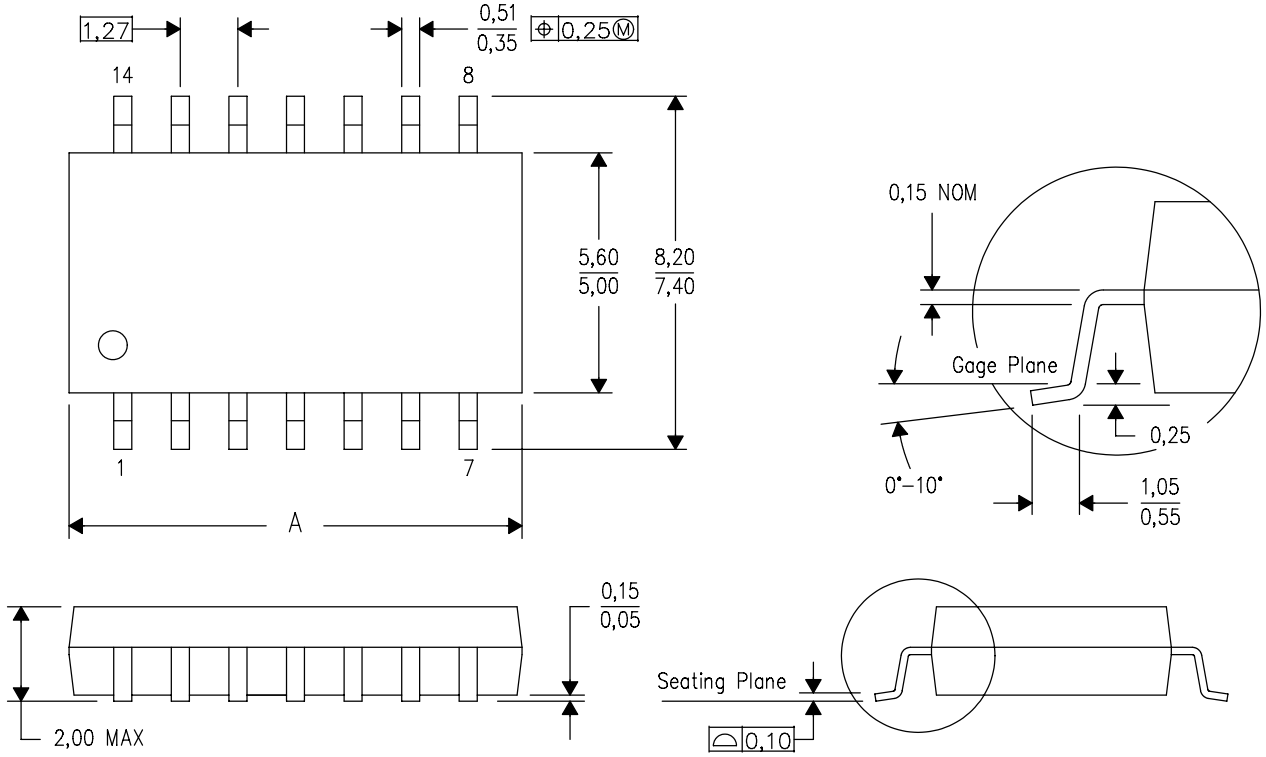

DIM \ PINS **	14	16	20	24
A MAX	10,50	10,50	12,90	15,30
A MIN	9,90	9,90	12,30	14,70

4040062/C 03/03

NOTES:
A. All linear dimensions are in millimeters.
B. This drawing is subject to change without notice.
C. Body dimensions do not include mold flash or protrusion, not to exceed 0,15.

D (R–PDSO–G14) PLASTIC SMALL OUTLINE

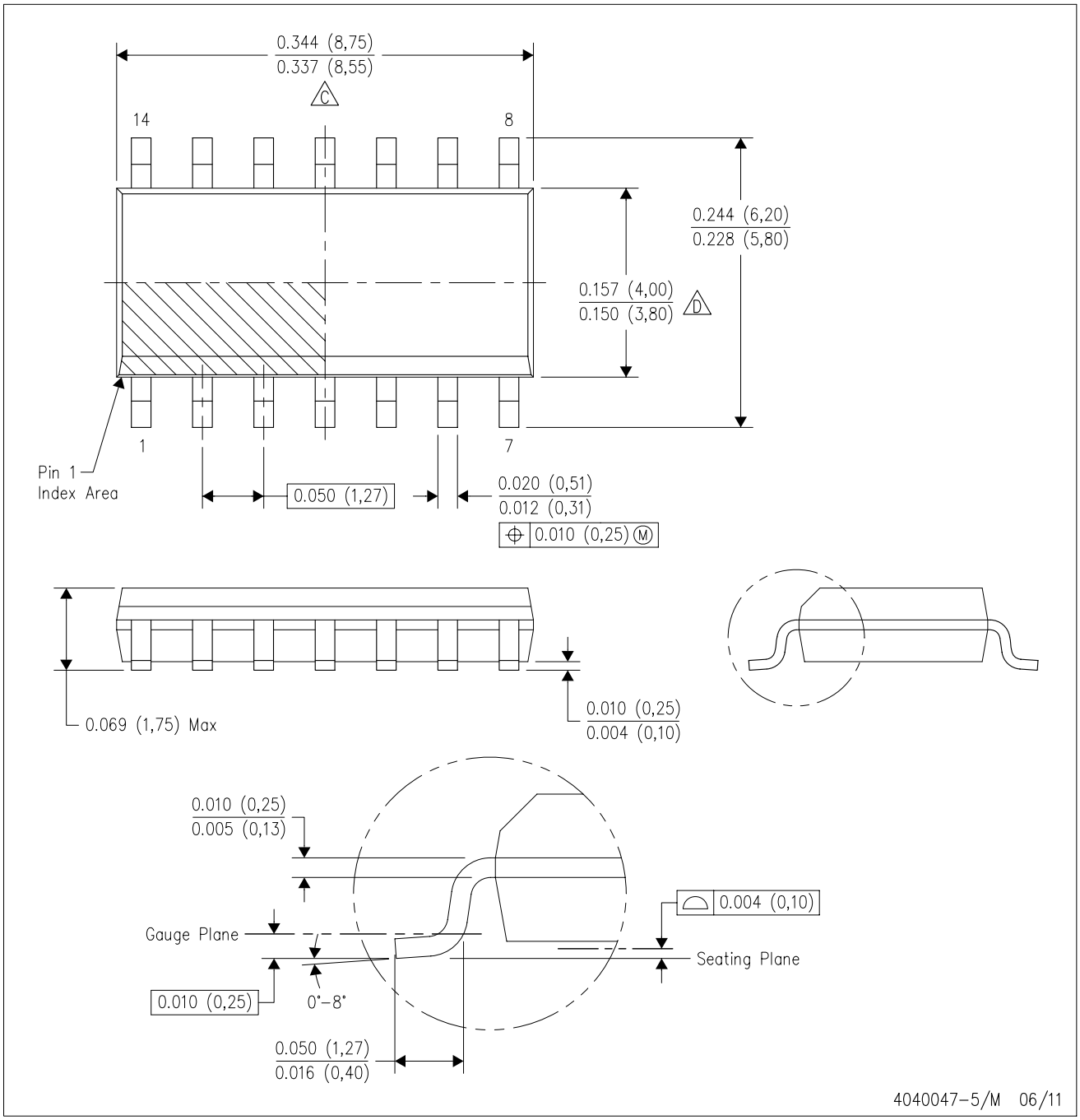

NOTES:
A. All linear dimensions are in inches (millimeters).
B. This drawing is subject to change without notice.
C. Body length does not include mold flash, protrusions, or gate burrs. Mold flash, protrusions, or gate burrs shall not exceed 0.006 (0,15) each side.
D. Body width does not include interlead flash. Interlead flash shall not exceed 0.017 (0,43) each side.
E. Reference JEDEC MS–012 variation AB.

D (R–PDSO–G14) PLASTIC SMALL OUTLINE

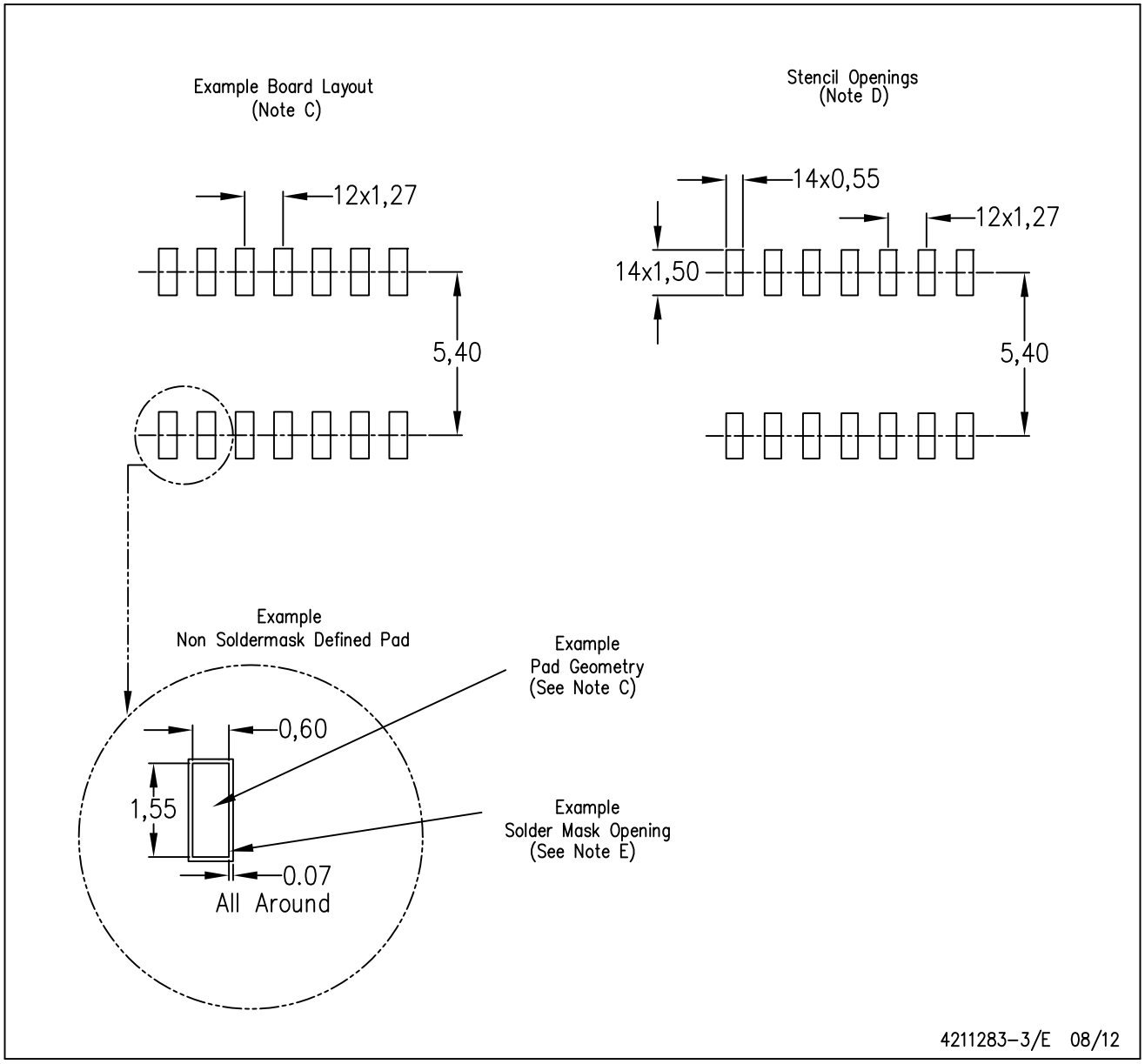

NOTES:
A. All linear dimensions are in millimeters.
B. This drawing is subject to change without notice.
C. Publication IPC–7351 is recommended for alternate designs.
D. Laser cutting apertures with trapezoidal walls and also rounding corners will offer better paste release. Customers should contact their board assembly site for stencil design recommendations. Refer to IPC–7525 for other stencil recommendations.
E. Customers should contact their board fabrication site for solder mask tolerances between and around signal pads.

PW (R–PDSO–G14) PLASTIC SMALL OUTLINE

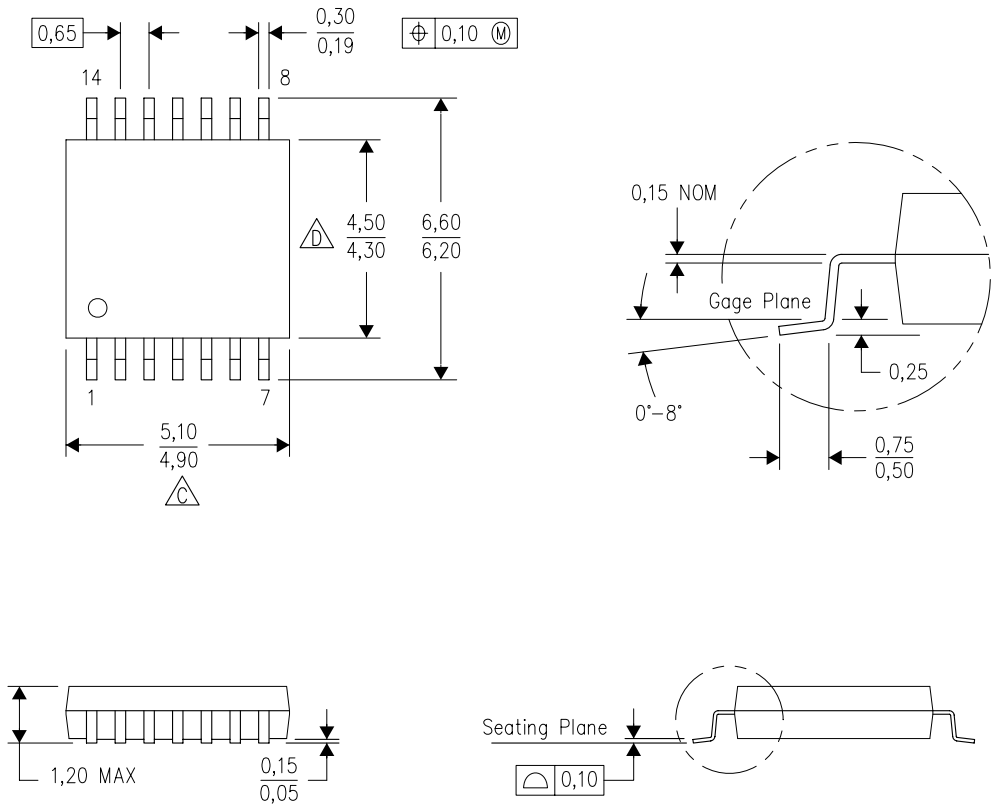

NOTES:
A. All linear dimensions are in millimeters. Dimensioning and tolerancing per ASME Y14.5M–1994.
B. This drawing is subject to change without notice.
C. Body length does not include mold flash, protrusions, or gate burrs. Mold flash, protrusions, or gate burrs shall not exceed 0,15 each side.
D. Body width does not include interlead flash. Interlead flash shall not exceed 0,25 each side.
E. Falls within JEDEC MO–153

PW (R–PDSO–G14) PLASTIC SMALL OUTLINE

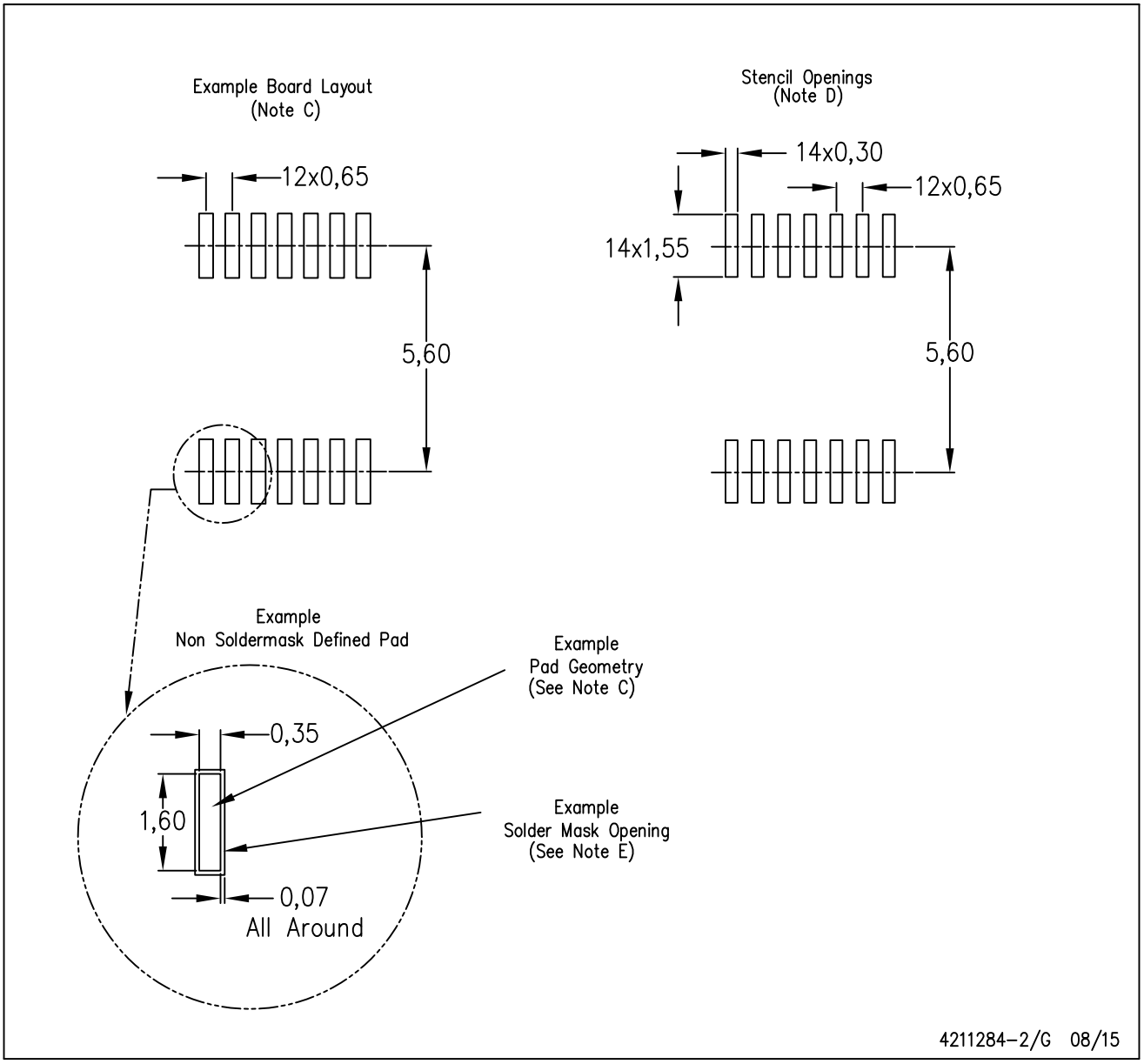

NOTES:
A. All linear dimensions are in millimeters.
B. This drawing is subject to change without notice.
C. Publication IPC–7351 is recommended for alternate designs.
D. Laser cutting apertures with trapezoidal walls and also rounding corners will offer better paste release. Customers should contact their board assembly site for stencil design recommendations. Refer to IPC–7525 for other stencil recommendations.
E. Customers should contact their board fabrication site for solder mask tolerances between and around signal pads.

N (R–PDIP–T**) PLASTIC DUAL–IN–LINE PACKAGE

16 PINS SHOWN

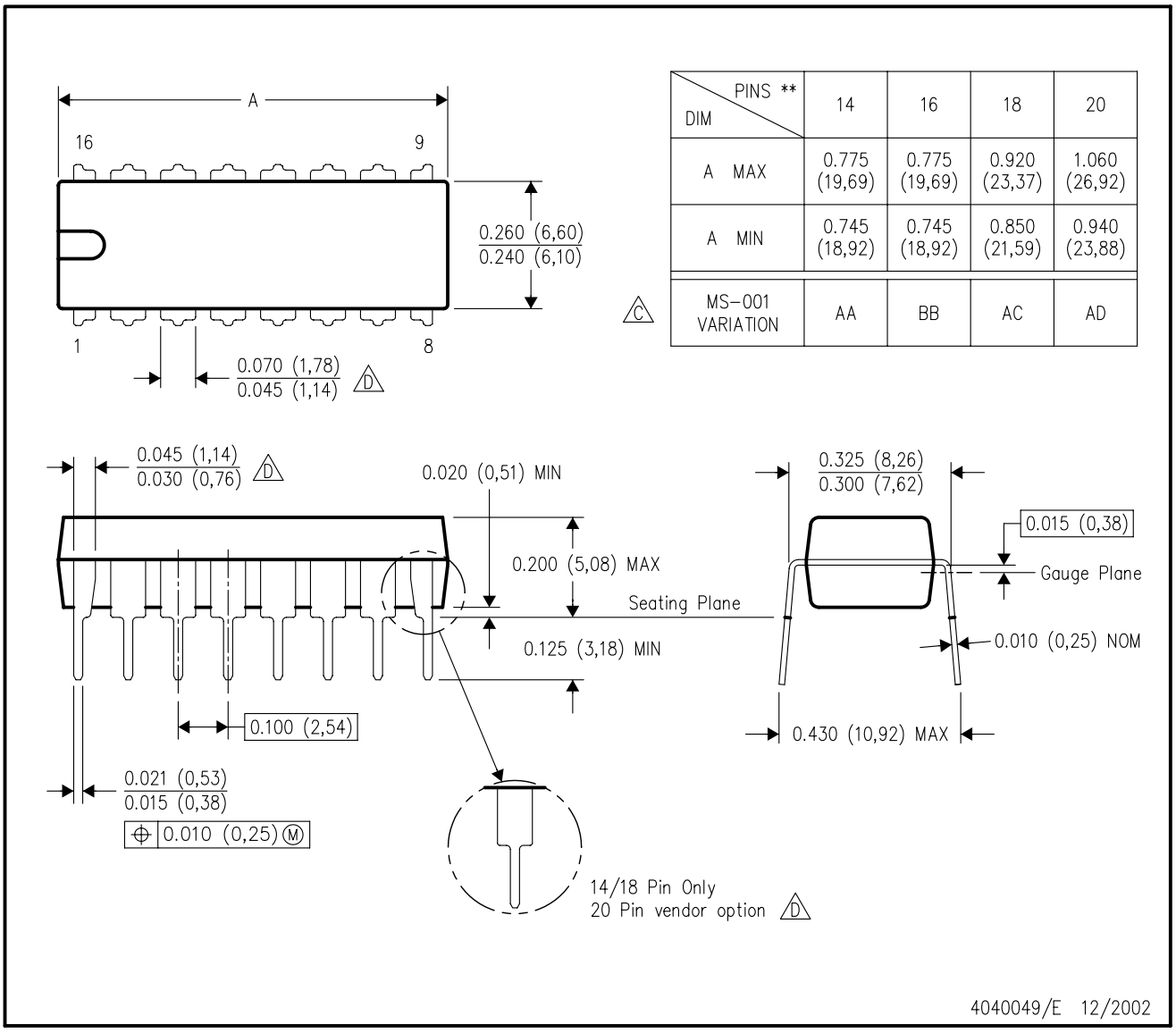

DIM \ PINS **	14	16	18	20
A MAX	0.775 (19,69)	0.775 (19,69)	0.920 (23,37)	1.060 (26,92)
A MIN	0.745 (18,92)	0.745 (18,92)	0.850 (21,59)	0.940 (23,88)
MS–001 VARIATION (C)	AA	BB	AC	AD

NOTES:
A. All linear dimensions are in inches (millimeters).
B. This drawing is subject to change without notice.
C. Falls within JEDEC MS–001, except 18 and 20 pin minimum body length (Dim A).
D. The 20 pin end lead shoulder width is a vendor option, either half or full width.

IMPORTANT NOTICE AND DISCLAIMER

TI PROVIDES TECHNICAL AND RELIABILITY DATA (INCLUDING DATA SHEETS), DESIGN RESOURCES (INCLUDING REFERENCE DESIGNS), APPLICATION OR OTHER DESIGN ADVICE, WEB TOOLS, SAFETY INFORMATION, AND OTHER RESOURCES “AS IS” AND WITH ALL FAULTS, AND DISCLAIMS ALL WARRANTIES, EXPRESS AND IMPLIED, INCLUDING WITHOUT LIMITATION ANY IMPLIED WARRANTIES OF MERCHANTABILITY, FITNESS FOR A PARTICULAR PURPOSE OR NON-INFRINGEMENT OF THIRD PARTY INTELLECTUAL PROPERTY RIGHTS.

These resources are intended for skilled developers designing with TI products. You are solely responsible for (1) selecting the appropriate TI products for your application, (2) designing, validating and testing your application, and (3) ensuring your application meets applicable standards, and any other safety, security, regulatory or other requirements.

These resources are subject to change without notice. TI grants you permission to use these resources only for development of an application that uses the TI products described in the resource. Other reproduction and display of these resources is prohibited. No license is granted to any other TI intellectual property right or to any third party intellectual property right. TI disclaims responsibility for, and you will fully indemnify TI and its representatives against, any claims, damages, costs, losses, and liabilities arising out of your use of these resources.

TI’s products are provided subject to TI’s Terms of Sale or other applicable terms available either on ti.com or provided in conjunction with such TI products. TI’s provision of these resources does not expand or otherwise alter TI’s applicable warranties or warranty disclaimers for TI products.

TI objects to and rejects any additional or different terms you may have proposed.

Mailing Address: Texas Instruments, Post Office Box 655303, Dallas, Texas 75265
Copyright © 2022, Texas Instruments Incorporated