LM185-2.5-N/LM285-2.5-N/LM385-2.5-N Micropower Voltage Reference Diode

Check for Samples: LM185-2.5-N, LM285-2.5-N, LM385-2.5-N

FEATURES

- **±20 mV (±0.8%) max. Initial Tolerance (A Grade)**
- **Operating Current of 20 µA to 20 mA**
- **0.6Ω Dynamic Impedance (A Grade)**
- **Low Temperature Coefficient**
- **Low Voltage Reference—2.5V**
- **1.2V Device and Adjustable Device Also Available—LM185-1.2 Series and LM185 Series, respectively**

DESCRIPTION

The LM185-2.5-N/LM285-2.5-N/LM385-2.5-N are micropower 2-terminal band-gap voltage regulator diodes. Operating over a 20 µA to 20 mA current range, they feature exceptionally low dynamic impedance and good temperature stability. On-chip trimming is used to provide tight voltage tolerance. Since the LM-185-2.5-N band-gap reference uses only transistors and resistors, low noise and good long term stability result.

Careful design of the LM185-2.5-N has made the device exceptionally tolerant of capacitive loading, making it easy to use in almost any reference application. The wide dynamic operating range allows its use with widely varying supplies with excellent regulation.

The extremely low power drain of the LM185-2.5-N makes it useful for micropower circuitry. This voltage reference can be used to make portable meters, regulators or general purpose analog circuitry with battery life approaching shelf life. Further, the wide operating current allows it to replace older references with a tighter tolerance part. For applications requiring 1.2V see LM185-1.2.

The LM185-2.5-N is rated for operation over a −55°C to 125°C temperature range while the LM285-2.5-N is rated −40°C to 85°C and the LM385-2.5-N 0°C to 70°C. The LM185-2.5-N/LM285-2.5-N are available in a hermetic TO package and the LM285-2.5-N/LM385-2.5-N are also available in a low-cost TO-92 molded package, as well as SOIC and SOT-23. The LM185-2.5-N is also available in a hermetic leadless chip carrier package.

Connection Diagram

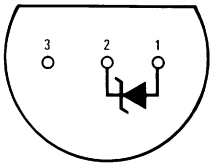

Figure 1. TO-92 Package (Bottom View) See Package Number LP0003A

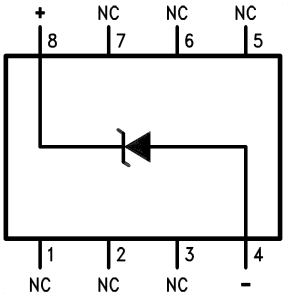

Figure 2. SOIC Package See Package Number D0008A

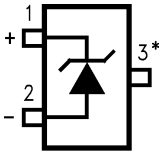

* Pin 3 is attached to the Die Attach Pad (DAP) and should be connected to Pin 2 or left floating.

Figure 3. SOT-23

Please be aware that an important notice concerning availability, standard warranty, and use in critical applications of Texas Instruments semiconductor products and disclaimers thereto appears at the end of this data sheet.

All trademarks are the property of their respective owners.

PRODUCTION DATA information is current as of publication date. Products conform to specifications per the terms of the Texas Instruments standard warranty. Production processing does not necessarily include testing of all parameters.

Copyright © 1999–2013, Texas Instruments Incorporated

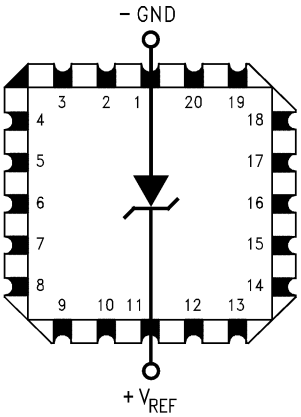

Figure 4. LCCC Leadless Chip Carrier See Package Number NAJ0020A

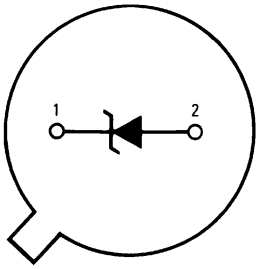

Figure 5. TO Package (Bottom View) See Package Number NDU0002A

These devices have limited built-in ESD protection. The leads should be shorted together or the device placed in conductive foam during storage or handling to prevent electrostatic damage to the MOS gates.

ABSOLUTE MAXIMUM RATINGS(1)(2)(3)

Reverse Current			30 mA
Forward Current			10 mA
Operating Temperature Range(4)	LM185-2.5-N		−55°C to + 125°C
	LM285-2.5-N		−40°C to + 85°C
	LM385-2.5-N		0°C to 70°C
ESD Susceptibility(5)			2kV
Storage Temperature			−55°C to + 150°C
Soldering Information	TO-92 Package (10 sec.)		260°C
	TO Package (10 sec.)		300°C
	SOIC and SOT-23 Package	Vapor Phase (60 sec.)	215°C
		Infrared (15 sec.)	220°C
See http://www.ti.com for other methods of soldering surface mount devices.			

(1) Refer to RETS185H-2.5 for military specifications.
(2) Absolute Maximum Ratings indicate limits beyond which damage to the device may occur. Operating Ratings indicate conditions for which the device is intended to be functional, but do not ensure specific performance limits. For ensured specifications and test conditions, see the Electrical Characteristics. The ensured specifications apply only for the test conditions listed.
(3) If Military/Aerospace specified devices are required, please contact the TI Sales Office/Distributors for availability and specifications.
(4) For elevated temperature operation, $T_{J\ MAX}$ is:
LM185-N: 150°C
LM285-N: 125°C
LM385-N: 100°C
See THERMAL CHARACTERISTICS.
(5) The human body model is a 100 pF capacitor discharged through a 1.5 kΩ resistor into each pin.

THERMAL CHARACTERISTICS

over operating free-air temperature range (unless otherwise noted)

Thermal Resistance	**LM185**	**150°C**	**SOIC-8**	**SOT-23**
	LM285	**125°C**		
	LM385	**100°C**		
	TO-92	**TO**		
θ_{ja} (Junction to Ambient)	180°C/W (0.4″ Leads)	440°C/W	165°C/W	283°C/W
	170°C/W (0.125″ Leads)			
θ_{jc} (Junction to Case)	N/A	80°C/W	N/A	N/A

Copyright © 1999–2013, Texas Instruments Incorporated

ELECTRICAL CHARACTERISTICS

Parameter	Conditions	Typ	LM385A-2.5-N LM385AX-2.5-N LM385AY-2.5-N		Units (Limits)
			Tested Limit(2)	Design Limit(3)	
Reverse Breakdown Voltage	I_R = 100 µA	2.500 **2.500**	2.480 2.520 	 **2.470** **2.530**	V(Min) V(Max) V(Min) V(Max)
Minimum Operating Current		12	18	**20**	µA (Max)
Reverse Breakdown Voltage Change with Current	$I_{MIN} \le I_R \le$ 1mA 1 mA $\le I_R \le$ 20 mA		1 10	**1.5** **20**	mV (Max) mV (Max)
Reverse Dynamic Impedance	I_R = 100 µA, f = 20 Hz	0.2		0.6 **1.5**	Ω
Wideband Noise (rms)	I_R = 100 µA 10 Hz ≤ f ≤ 10 kHz	120			µV
Long Term Stability	I_R = 100 µA, T = 1000 Hr, T_A = 25°C ±0.1°C	20			ppm
Average Temperature Coefficient(4)	$I_{MIN} \le I_R \le$ 20 mA X Suffix Y Suffix All Others		 **30** **50** 	 **150**	 ppm/°C (Max)

(1) Parameters identified with boldface type apply at temperature extremes. All other numbers apply at $T_A = T_J$ = 25°C.
(2) Specified and 100% production tested.
(3) Specified, but not 100% production tested. These limits are not used to calculate average outgoing quality levels.
(4) The average temperature coefficient is defined as the maximum deviation of reference voltage at all measured temperatures between the operating T_{MAX} and T_{MIN}, divided by T_{MAX}–T_{MIN}. The measured temperatures are −55°C, −40°C, 0°C, 25°C, 70°C, 85°C, 125°C.

Copyright © 1999–2013, Texas Instruments Incorporated

ELECTRICAL CHARACTERISTICS

Parameter	Conditions	Typ	LM185-2.5-N / LM185BX-2.5-N / LM185BY-2.5-N / LM285-2.5-N / LM285BX-2.5-N / LM285BY-2.5-N		LM385B-2.5-N / LM385BX-2.5-N / LM385BY-2.5-N		LM385-2.5-N		Units (Limit)
			Tested Limit(1)(2)	Design Limit(3)	Tested Limit(1)	Design Limit(3)	Tested Limit(1)	Design Limit(3)	
Reverse Breakdown Voltage	T_A = 25°C, 20 µA ≤ I_R ≤ 20 mA	2.5	2.462		2.462		2.425		V(Min)
			2.538		2.538		2.575		V(Max)
Minimum Operating Current		13	20	**30**	20	**30**	20	**30**	µA (Max)
	LM385M3-2.5-N						15	**20**	
Reverse Breakdown Voltage Change with Current	20 µA ≤ I_R ≤ 1 mA		1	**1.5**	2.0	**2.5**	2.0	**2.5**	mV (Max)
	1 mA ≤ I_R ≤ 20 mA		10	**20**	20	**25**	20	**25**	mV (Max)
Reverse Dynamic Impedance	I_R = 100 µA, f = 20 Hz	1							Ω
Wideband Noise (rms)	I_R = 100 µA, 10 Hz ≤ f ≤ 10 kHz	120							µV
Long Term Stability	I_R = 100 µA, T = 1000 Hr, T_A = 25°C ±0.1°C	20							ppm
Average Temperature Coefficient(4)	I_R = 100 µA								
	X Suffix		**30**		**30**				ppm/°C
	Y Suffix		**50**		**50**				ppm/°C
	All Others			**150**		**150**		**150**	ppm/°C (Max)

(1) Specified and 100% production tested.
(2) A military RETS electrical specification available on request.
(3) Specified, but not 100% production tested. These limits are not used to calculate average outgoing quality levels.
(4) The average temperature coefficient is defined as the maximum deviation of reference voltage at all measured temperatures between the operating T_{MAX} and T_{MIN}, divided by T_{MAX}–T_{MIN}. The measured temperatures are −55°C, −40°C, 0°C, 25°C, 70°C, 85°C, 125°C.

Copyright © 1999–2013, Texas Instruments Incorporated

TYPICAL PERFORMANCE CHARACTERISTICS

Reverse Characteristics

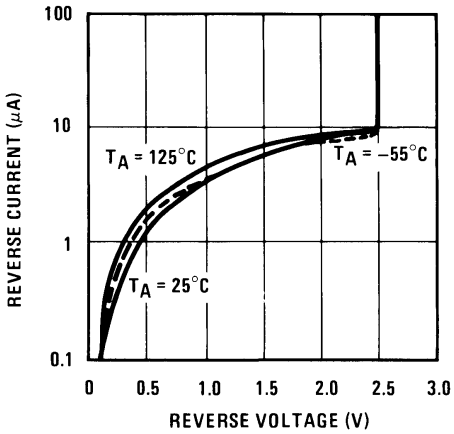

Figure 6.

Reverse Characteristics

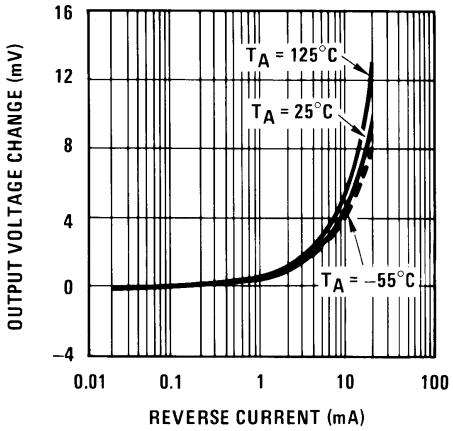

Figure 7.

Forward Characteristics

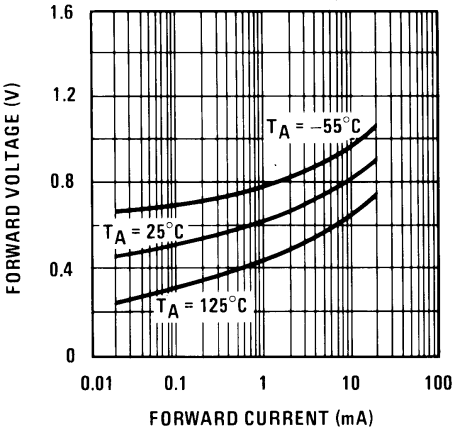

Figure 8.

Temperature Drift

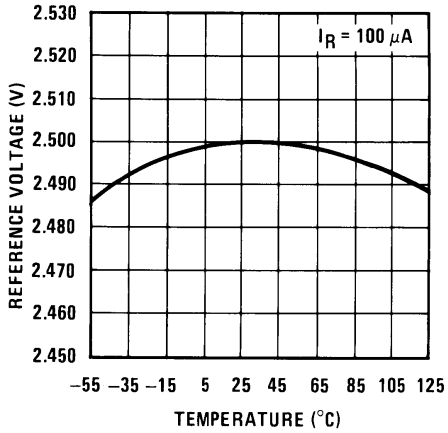

Figure 9.

Reverse Dynamic Impedance

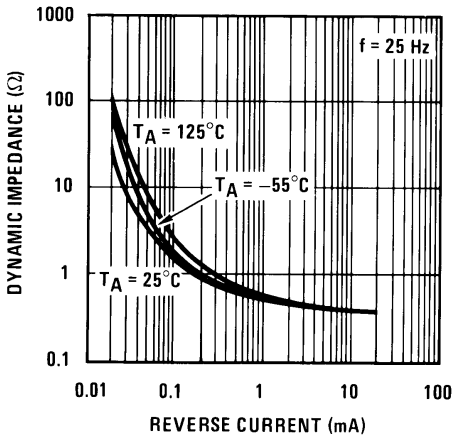

Figure 10.

Reverse Dynamic Impedance

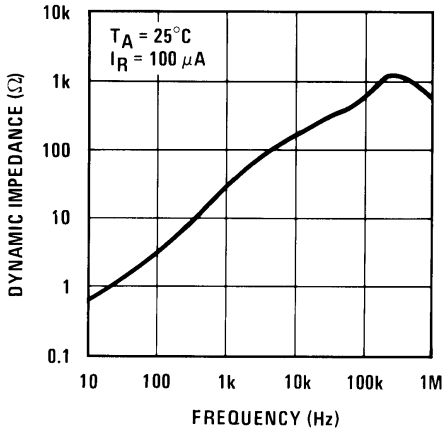

Figure 11.

Copyright © 1999–2013, Texas Instruments Incorporated

TYPICAL PERFORMANCE CHARACTERISTICS (continued)

Noise Voltage

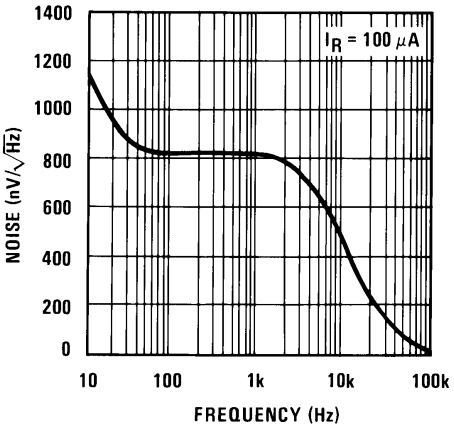

Figure 12.

Filtered Output Noise

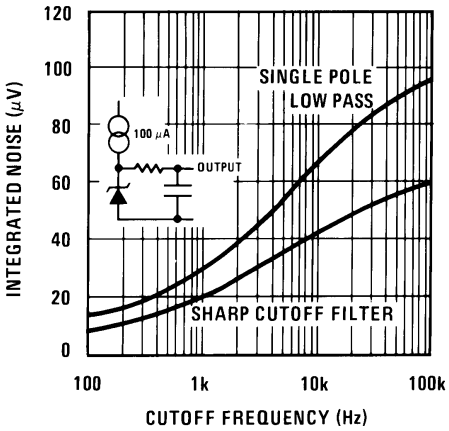

Figure 13.

Response Time

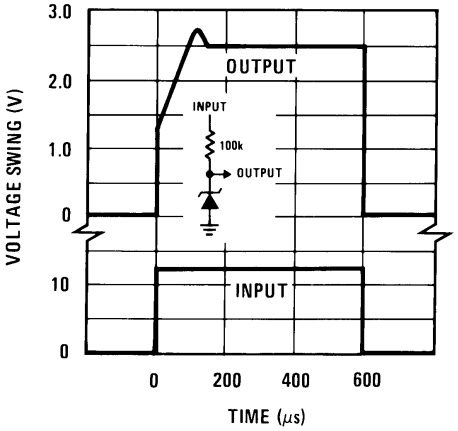

Figure 14.

Copyright © 1999–2013, Texas Instruments Incorporated

APPLICATIONS

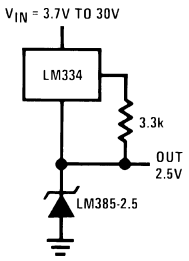

Figure 15. Wide Input Range Reference

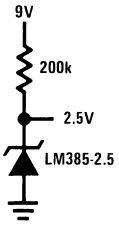

Figure 16. Micropower Reference from 9V Battery

LM385-2.5-N Applications

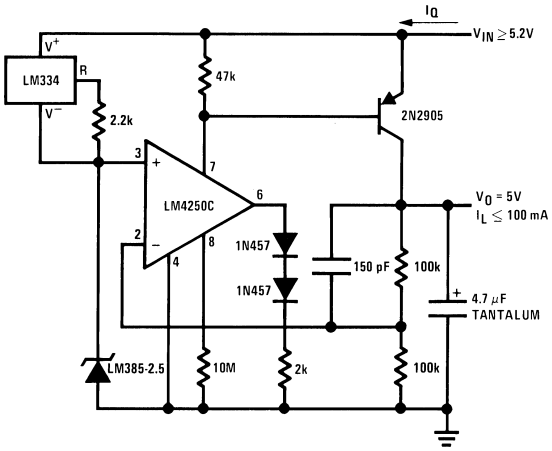

I_Q ≈ 40 μA

Figure 17. Micropower 5V Reference

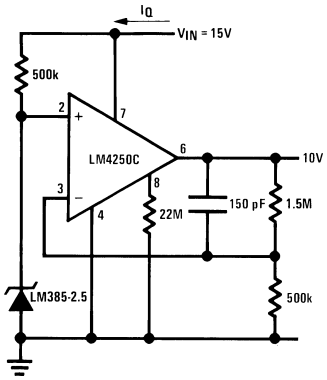

I_Q ≈ 30 μA standby current

Figure 18. Micropower 10V Reference

PRECISION 1 μA to 1 mA CURRENT SOURCES

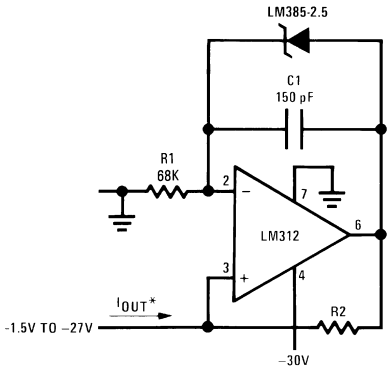

$^*I_{OUT} = \frac{2.5V}{R2}$

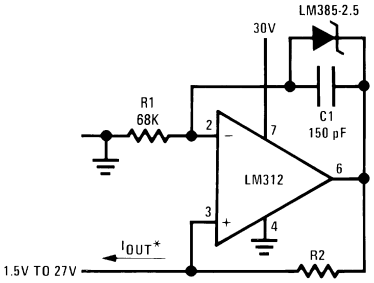

Figure 19.

METER THERMOMETERS

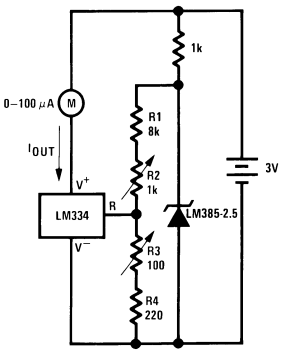

Calibration

1. Short LM385-2.5-N, adjust R3 for I_{OUT}=temp at 1μA/°K.
2. Remove short, adjust R2 for correct reading in centigrade

Figure 20. 0°C–100°C Thermomemter

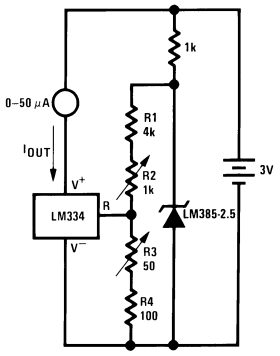

Calibration

1. Short LM385-2.5-N, adjust R3 for I_{OUT}=temp at 1.8 μA/°K
2. Remove short, adjust R2 for correct reading in °F

Figure 21. 0°F–50°F Thermomemter

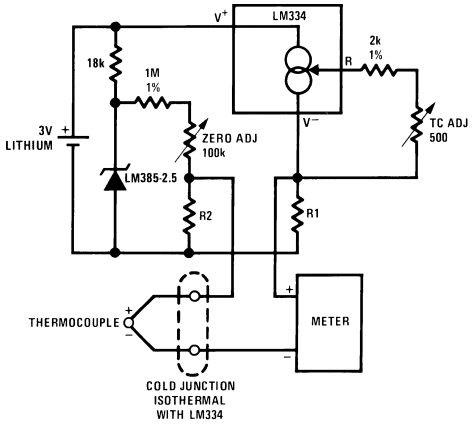

Adjustment Procedure

1. Adjust TC ADJ pot until voltage across R1 equals Kelvin temperature multiplied by the thermocouple Seebeck coefficient.
2. Adjust zero ADJ pot until voltage across R2 equals the thermocouple Seebeck coefficient multiplied by 273.2.

Figure 22. Micropower Thermocouple Cold Junction Compensator

Thermocouple Type[(1)]	Seebeck Coefficient (μV/°C)	R1 (Ω)	R2 (Ω)	Voltage Across R1 @25°C (mV)	Voltage Across R2 (mV)
J	52.3	523	1.24k	15.60	14.32
T	42.8	432	1k	12.77	11.78
K	40.8	412	953Ω	12.17	11.17
S	6.4	63.4	150Ω	1.908	1.766

(1) Typical supply current 50 μA

Copyright © 1999–2013, Texas Instruments Incorporated

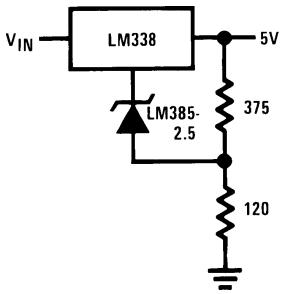

Figure 23. Improving Regulation of Adjstable Regulators

Schematic Diagram

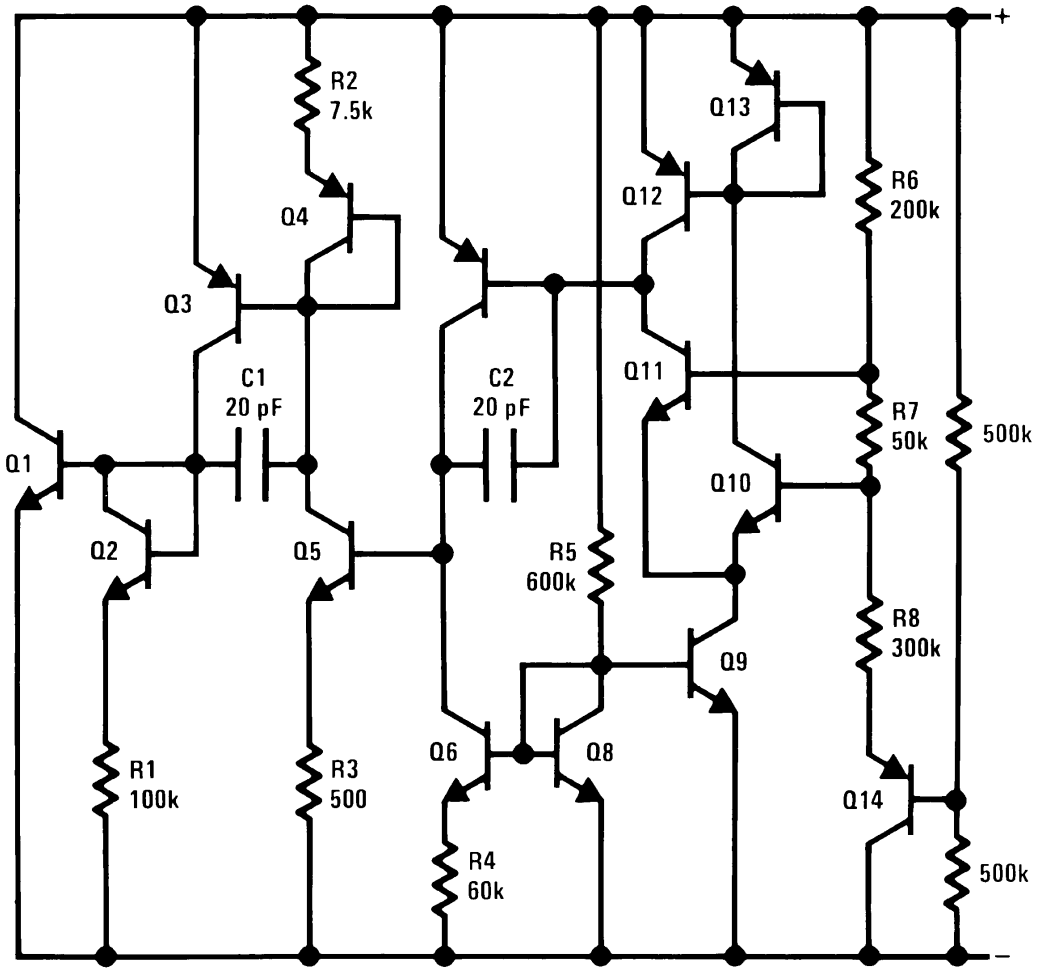

REVISION HISTORY

Changes from Revision C (March 2013) to Revision D	Page
• Changed layout of National Data Sheet to TI format	9

Copyright © 1999–2013, Texas Instruments Incorporated

PACKAGING INFORMATION

Orderable Device	Status (1)	Package Type	Package Drawing	Pins	Package Qty	Eco Plan (2)	Lead finish/ Ball material (6)	MSL Peak Temp (3)	Op Temp (°C)	Device Marking (4/5)	Samples
LM185H-2.5/NOPB	ACTIVE	TO	NDU	2	1000	RoHS & Green	SNAGCU	Level-1-NA-UNLIM	-55 to 125	(LM185H2.5, LM185 H2.5)	Samples
LM285BXM-2.5/NOPB	ACTIVE	SOIC	D	8	95	RoHS & Green	SN	Level-1-260C-UNLIM	-40 to 85	285BX M2.5	Samples
LM285BXMX-2.5/NOPB	ACTIVE	SOIC	D	8	2500	RoHS & Green	SN	Level-1-260C-UNLIM	-40 to 85	285BX M2.5	Samples
LM285BXZ-2.5/NOPB	ACTIVE	TO-92	LP	3	1800	RoHS & Green	Call TI	N / A for Pkg Type	-40 to 85	285BX Z2.5	Samples
LM285BYM-2.5/NOPB	ACTIVE	SOIC	D	8	95	RoHS & Green	SN	Level-1-260C-UNLIM	-40 to 85	285BY M2.5	Samples
LM285BYMX-2.5/NOPB	ACTIVE	SOIC	D	8	2500	RoHS & Green	SN	Level-1-260C-UNLIM	-40 to 85	285BY M2.5	Samples
LM285BYZ-2.5/NOPB	ACTIVE	TO-92	LP	3	1800	RoHS & Green	Call TI	N / A for Pkg Type	-40 to 85	285BY Z2.5	Samples
LM285M-2.5/NOPB	ACTIVE	SOIC	D	8	95	RoHS & Green	SN	Level-1-260C-UNLIM	-40 to 85	LM285 M2.5	Samples
LM285MX-2.5/NOPB	ACTIVE	SOIC	D	8	2500	RoHS & Green	SN	Level-1-260C-UNLIM	-40 to 85	LM285 M2.5	Samples
LM285Z-2.5/LFT7	ACTIVE	TO-92	LP	3	2000	RoHS & Green	Call TI	N / A for Pkg Type		LM285 Z-2.5	Samples
LM285Z-2.5/NOPB	ACTIVE	TO-92	LP	3	1800	RoHS & Green	Call TI	N / A for Pkg Type	-40 to 85	LM285 Z-2.5	Samples
LM385BM-2.5/NOPB	ACTIVE	SOIC	D	8	95	RoHS & Green	SN	Level-1-260C-UNLIM	0 to 70	LM385 BM2.5	Samples
LM385BMX-2.5/NOPB	ACTIVE	SOIC	D	8	2500	RoHS & Green	SN	Level-1-260C-UNLIM	0 to 70	LM385 BM2.5	Samples
LM385BXM-2.5/NOPB	ACTIVE	SOIC	D	8	95	RoHS & Green	SN	Level-1-260C-UNLIM	0 to 70	385BX M2.5	Samples
LM385BXMX-2.5/NOPB	ACTIVE	SOIC	D	8	2500	RoHS & Green	SN	Level-1-260C-UNLIM	0 to 70	385BX M2.5	Samples
LM385BXZ-2.5/NOPB	ACTIVE	TO-92	LP	3	1800	RoHS & Green	Call TI	N / A for Pkg Type	0 to 70	385BX Z-2.5	Samples
LM385BYM-2.5/NOPB	ACTIVE	SOIC	D	8	95	RoHS & Green	SN	Level-1-260C-UNLIM	0 to 70	385BY	Samples

Orderable Device	Status (1)	Package Type	Package Drawing	Pins	Package Qty	Eco Plan (2)	Lead finish/ Ball material (6)	MSL Peak Temp (3)	Op Temp (°C)	Device Marking (4/5)	Samples
										M2.5	
LM385BYMX-2.5/NOPB	ACTIVE	SOIC	D	8	2500	RoHS & Green	SN	Level-1-260C-UNLIM	0 to 70	385BY M2.5	Samples
LM385BYZ-2.5/NOPB	ACTIVE	TO-92	LP	3	1800	RoHS & Green	Call TI	N / A for Pkg Type	0 to 70	385BY Z-2.5	Samples
LM385BZ-2.5/LFT7	ACTIVE	TO-92	LP	3	2000	RoHS & Green	Call TI	N / A for Pkg Type		LM385 BZ2.5	Samples
LM385BZ-2.5/NOPB	ACTIVE	TO-92	LP	3	1800	RoHS & Green	Call TI	N / A for Pkg Type	0 to 70	LM385 BZ2.5	Samples
LM385M-2.5/NOPB	ACTIVE	SOIC	D	8	95	RoHS & Green	SN	Level-1-260C-UNLIM	0 to 70	LM385 M2.5	Samples
LM385M3-2.5	NRND	SOT-23	DBZ	3	1000	Non-RoHS & Green	Call TI	Level-1-260C-UNLIM	0 to 70	R12	
LM385M3-2.5/NOPB	ACTIVE	SOT-23	DBZ	3	1000	RoHS & Green	SN	Level-1-260C-UNLIM	0 to 70	R12	Samples
LM385M3X-2.5/NOPB	ACTIVE	SOT-23	DBZ	3	3000	RoHS & Green	SN	Level-1-260C-UNLIM	0 to 70	R12	Samples
LM385MX-2.5/NOPB	ACTIVE	SOIC	D	8	2500	RoHS & Green	SN	Level-1-260C-UNLIM	0 to 70	LM385 M2.5	Samples
LM385Z-2.5/LFT1	ACTIVE	TO-92	LP	3	2000	RoHS & Green	SN	N / A for Pkg Type		LM385 Z2.5	Samples
LM385Z-2.5/LFT2	ACTIVE	TO-92	LP	3	2000	RoHS & Green	SN	N / A for Pkg Type		LM385 Z2.5	Samples
LM385Z-2.5/NOPB	ACTIVE	TO-92	LP	3	1800	RoHS & Green	Call TI	N / A for Pkg Type	0 to 70	LM385 Z2.5	Samples

(1) The marketing status values are defined as follows:
ACTIVE: Product device recommended for new designs.
LIFEBUY: TI has announced that the device will be discontinued, and a lifetime-buy period is in effect.
NRND: Not recommended for new designs. Device is in production to support existing customers, but TI does not recommend using this part in a new design.
PREVIEW: Device has been announced but is not in production. Samples may or may not be available.
OBSOLETE: TI has discontinued the production of the device.

(2) **RoHS:** TI defines "RoHS" to mean semiconductor products that are compliant with the current EU RoHS requirements for all 10 RoHS substances, including the requirement that RoHS substance do not exceed 0.1% by weight in homogeneous materials. Where designed to be soldered at high temperatures, "RoHS" products are suitable for use in specified lead-free processes. TI may reference these types of products as "Pb-Free".
RoHS Exempt: TI defines "RoHS Exempt" to mean products that contain lead but are compliant with EU RoHS pursuant to a specific EU RoHS exemption.

Green: TI defines "Green" to mean the content of Chlorine (Cl) and Bromine (Br) based flame retardants meet JS709B low halogen requirements of <=1000ppm threshold. Antimony trioxide based flame retardants must also meet the <=1000ppm threshold requirement.

(3) MSL, Peak Temp. - The Moisture Sensitivity Level rating according to the JEDEC industry standard classifications, and peak solder temperature.

(4) There may be additional marking, which relates to the logo, the lot trace code information, or the environmental category on the device.

(5) Multiple Device Markings will be inside parentheses. Only one Device Marking contained in parentheses and separated by a "~" will appear on a device. If a line is indented then it is a continuation of the previous line and the two combined represent the entire Device Marking for that device.

(6) Lead finish/Ball material - Orderable Devices may have multiple material finish options. Finish options are separated by a vertical ruled line. Lead finish/Ball material values may wrap to two lines if the finish value exceeds the maximum column width.

Important Information and Disclaimer: The information provided on this page represents TI's knowledge and belief as of the date that it is provided. TI bases its knowledge and belief on information provided by third parties, and makes no representation or warranty as to the accuracy of such information. Efforts are underway to better integrate information from third parties. TI has taken and continues to take reasonable steps to provide representative and accurate information but may not have conducted destructive testing or chemical analysis on incoming materials and chemicals. TI and TI suppliers consider certain information to be proprietary, and thus CAS numbers and other limited information may not be available for release.

In no event shall TI's liability arising out of such information exceed the total purchase price of the TI part(s) at issue in this document sold by TI to Customer on an annual basis.

TAPE AND REEL INFORMATION

REEL DIMENSIONS

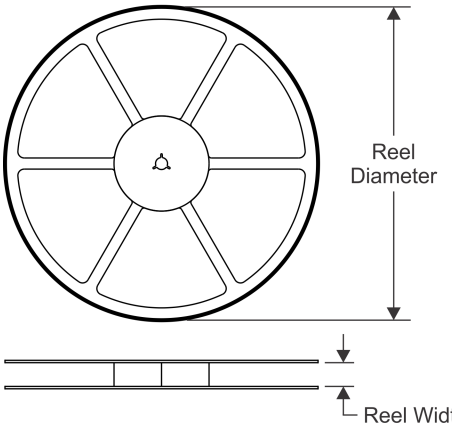

TAPE DIMENSIONS

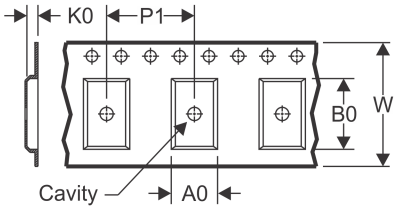

A0	Dimension designed to accommodate the component width
B0	Dimension designed to accommodate the component length
K0	Dimension designed to accommodate the component thickness
W	Overall width of the carrier tape
P1	Pitch between successive cavity centers

QUADRANT ASSIGNMENTS FOR PIN 1 ORIENTATION IN TAPE

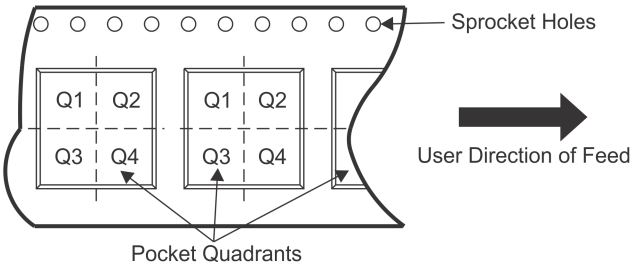

*All dimensions are nominal

Device	Package Type	Package Drawing	Pins	SPQ	Reel Diameter (mm)	Reel Width W1 (mm)	A0 (mm)	B0 (mm)	K0 (mm)	P1 (mm)	W (mm)	Pin1 Quadrant
LM285BXMX-2.5/NOPB	SOIC	D	8	2500	330.0	12.4	6.5	5.4	2.0	8.0	12.0	Q1
LM285BYMX-2.5/NOPB	SOIC	D	8	2500	330.0	12.4	6.5	5.4	2.0	8.0	12.0	Q1
LM285MX-2.5/NOPB	SOIC	D	8	2500	330.0	12.4	6.5	5.4	2.0	8.0	12.0	Q1
LM385BMX-2.5/NOPB	SOIC	D	8	2500	330.0	12.4	6.5	5.4	2.0	8.0	12.0	Q1
LM385BXMX-2.5/NOPB	SOIC	D	8	2500	330.0	12.4	6.5	5.4	2.0	8.0	12.0	Q1
LM385BYMX-2.5/NOPB	SOIC	D	8	2500	330.0	12.4	6.5	5.4	2.0	8.0	12.0	Q1
LM385M3-2.5	SOT-23	DBZ	3	1000	178.0	8.4	3.3	2.9	1.22	4.0	8.0	Q3
LM385M3-2.5/NOPB	SOT-23	DBZ	3	1000	178.0	8.4	3.3	2.9	1.22	4.0	8.0	Q3
LM385M3X-2.5/NOPB	SOT-23	DBZ	3	3000	178.0	8.4	3.3	2.9	1.22	4.0	8.0	Q3
LM385MX-2.5/NOPB	SOIC	D	8	2500	330.0	12.4	6.5	5.4	2.0	8.0	12.0	Q1

TAPE AND REEL BOX DIMENSIONS

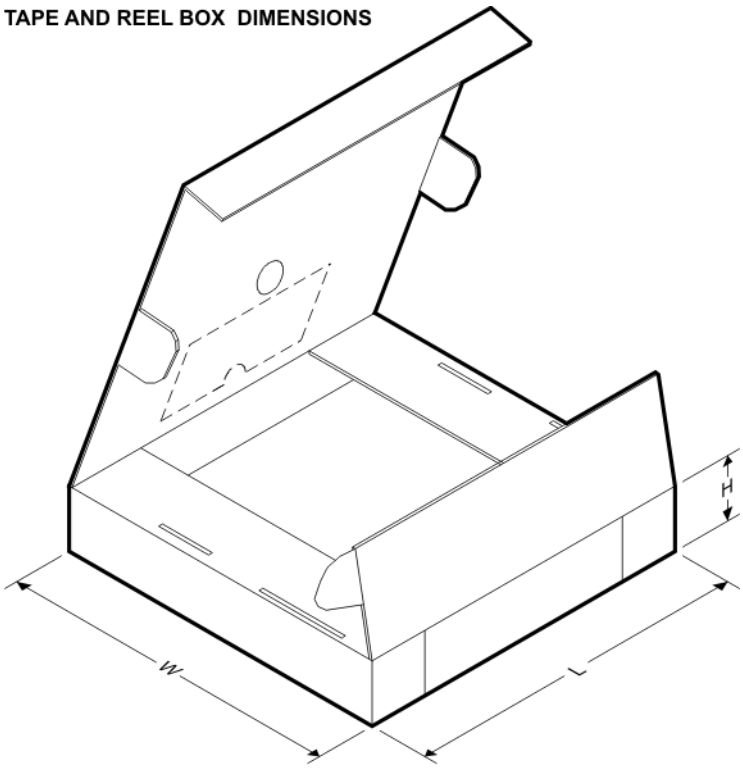

*All dimensions are nominal

Device	Package Type	Package Drawing	Pins	SPQ	Length (mm)	Width (mm)	Height (mm)
LM285BXMX-2.5/NOPB	SOIC	D	8	2500	367.0	367.0	35.0
LM285BYMX-2.5/NOPB	SOIC	D	8	2500	367.0	367.0	35.0
LM285MX-2.5/NOPB	SOIC	D	8	2500	367.0	367.0	35.0
LM385BMX-2.5/NOPB	SOIC	D	8	2500	367.0	367.0	35.0
LM385BXMX-2.5/NOPB	SOIC	D	8	2500	367.0	367.0	35.0
LM385BYMX-2.5/NOPB	SOIC	D	8	2500	367.0	367.0	35.0
LM385M3-2.5	SOT-23	DBZ	3	1000	208.0	191.0	35.0
LM385M3-2.5/NOPB	SOT-23	DBZ	3	1000	208.0	191.0	35.0
LM385M3X-2.5/NOPB	SOT-23	DBZ	3	3000	208.0	191.0	35.0
LM385MX-2.5/NOPB	SOIC	D	8	2500	367.0	367.0	35.0

TUBE

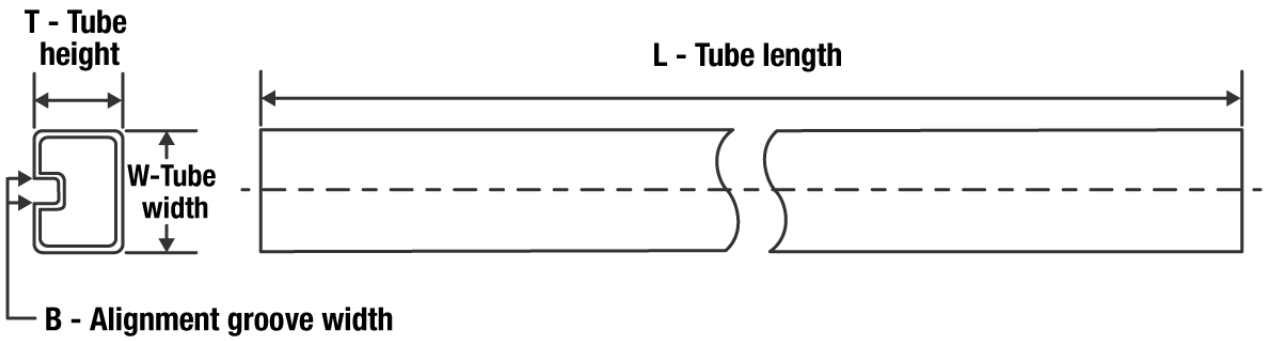

*All dimensions are nominal

Device	Package Name	Package Type	Pins	SPQ	L (mm)	W (mm)	T (µm)	B (mm)
LM285BXM-2.5/NOPB	D	SOIC	8	95	495	8	4064	3.05
LM285BYM-2.5/NOPB	D	SOIC	8	95	495	8	4064	3.05
LM285M-2.5/NOPB	D	SOIC	8	95	495	8	4064	3.05
LM385BM-2.5/NOPB	D	SOIC	8	95	495	8	4064	3.05
LM385BXM-2.5/NOPB	D	SOIC	8	95	495	8	4064	3.05
LM385BYM-2.5/NOPB	D	SOIC	8	95	495	8	4064	3.05
LM385M-2.5/NOPB	D	SOIC	8	95	495	8	4064	3.05

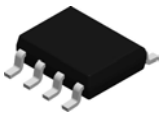

PACKAGE OUTLINE

D0008A

SOIC - 1.75 mm max height

SMALL OUTLINE INTEGRATED CIRCUIT

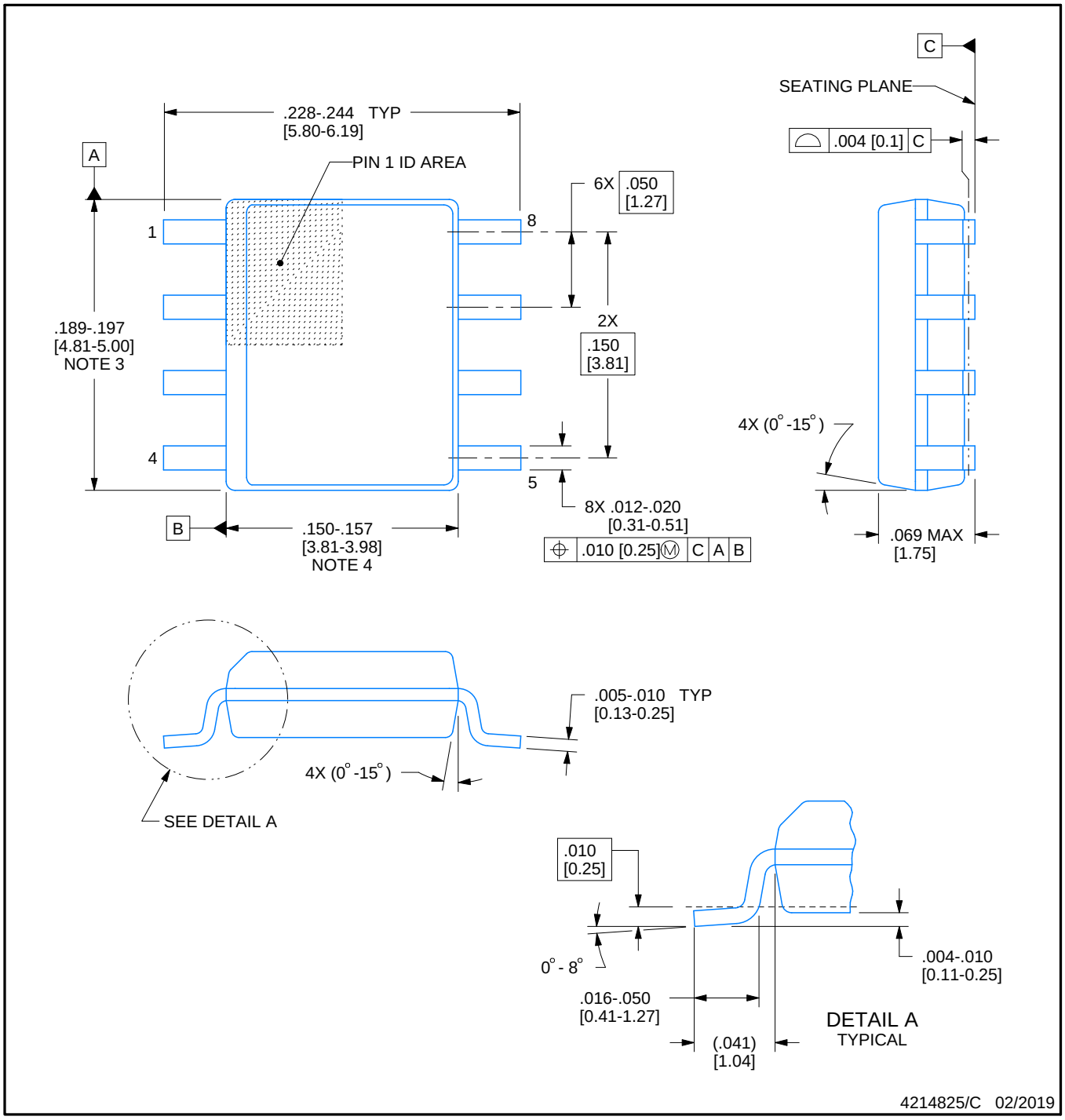

NOTES:

1. Linear dimensions are in inches [millimeters]. Dimensions in parenthesis are for reference only. Controlling dimensions are in inches. Dimensioning and tolerancing per ASME Y14.5M.
2. This drawing is subject to change without notice.
3. This dimension does not include mold flash, protrusions, or gate burrs. Mold flash, protrusions, or gate burrs shall not exceed .006 [0.15] per side.
4. This dimension does not include interlead flash.
5. Reference JEDEC registration MS-012, variation AA.

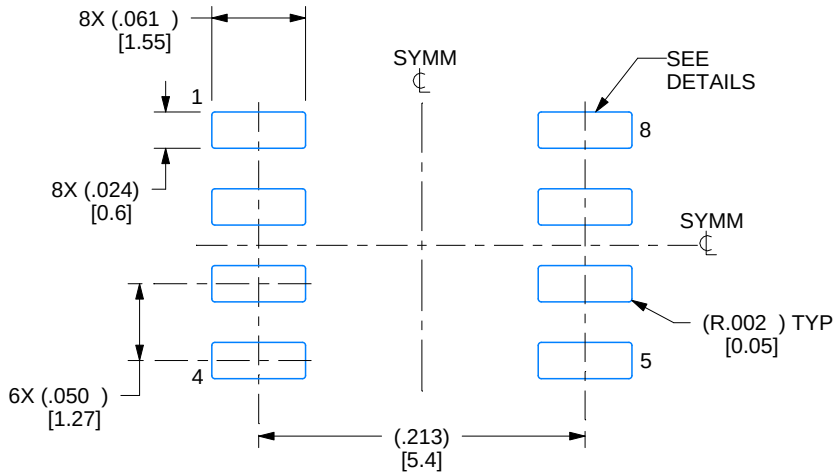

LAND PATTERN EXAMPLE
EXPOSED METAL SHOWN
SCALE:8X

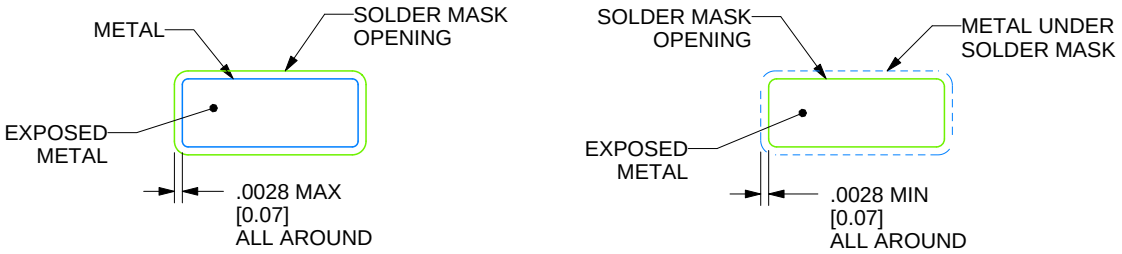

SOLDER MASK DETAILS

4214825/C 02/2019

NOTES: (continued)

6. Publication IPC-7351 may have alternate designs.
7. Solder mask tolerances between and around signal pads can vary based on board fabrication site.

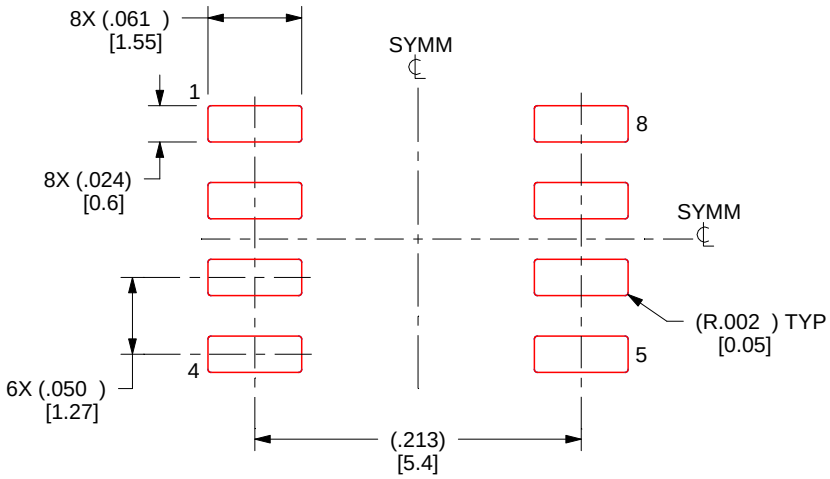

SOLDER PASTE EXAMPLE
BASED ON .005 INCH [0.125 MM] THICK STENCIL
SCALE:8X

4214825/C 02/2019

NOTES: (continued)

8. Laser cutting apertures with trapezoidal walls and rounded corners may offer better paste release. IPC-7525 may have alternate design recommendations.
9. Board assembly site may have different recommendations for stencil design.

Images above are just a representation of the package family, actual package may vary.
Refer to the product data sheet for package details.

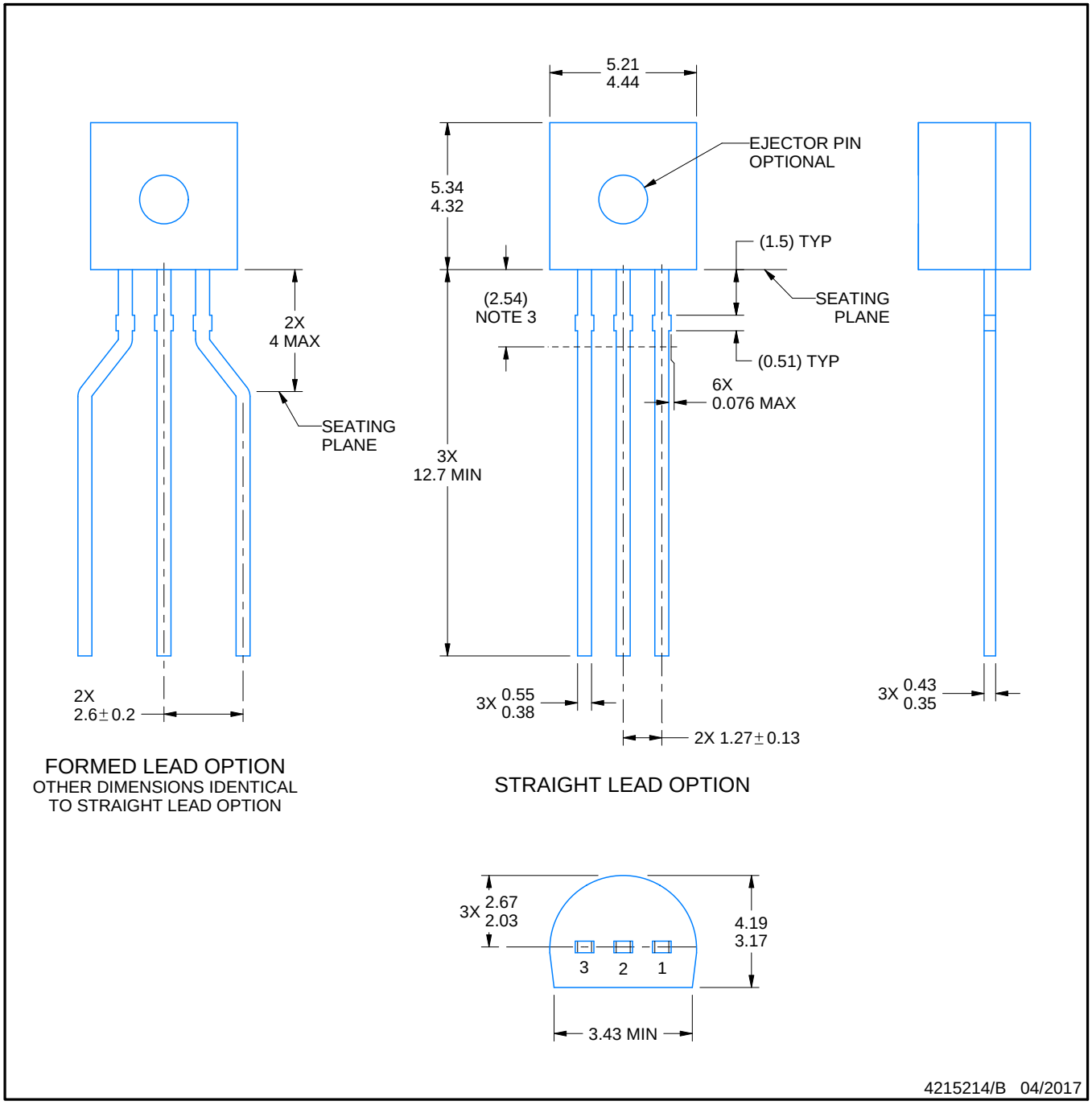

NOTES:

1. All linear dimensions are in millimeters. Any dimensions in parenthesis are for reference only. Dimensioning and tolerancing per ASME Y14.5M.
2. This drawing is subject to change without notice.
3. Lead dimensions are not controlled within this area.
4. Reference JEDEC TO-226, variation AA.
5. Shipping method:
   a. Straight lead option available in bulk pack only.
   b. Formed lead option available in tape and reel or ammo pack.
   c. Specific products can be offered in limited combinations of shipping medium and lead options.
   d. Consult product folder for more information on available options.

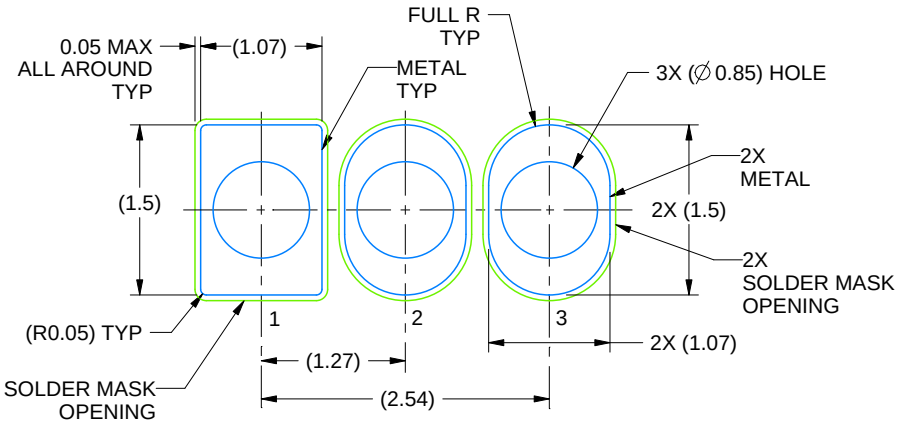

LAND PATTERN EXAMPLE
STRAIGHT LEAD OPTION
NON-SOLDER MASK DEFINED
SCALE:15X

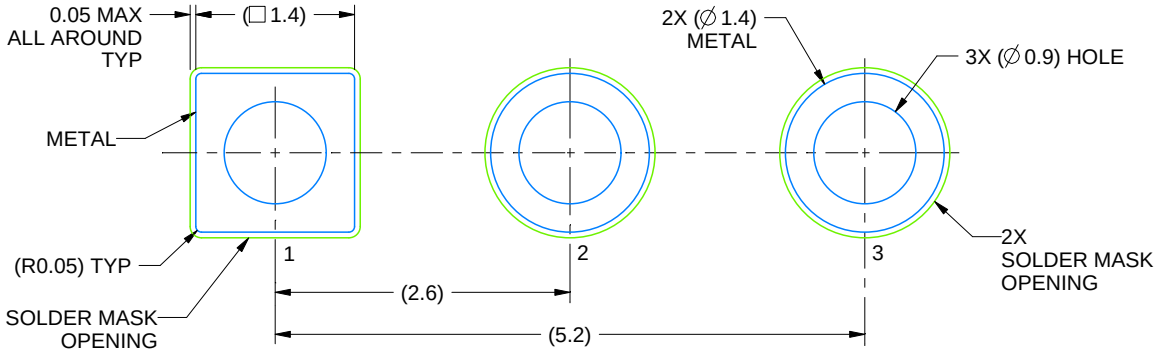

LAND PATTERN EXAMPLE
FORMED LEAD OPTION
NON-SOLDER MASK DEFINED
SCALE:15X

4215214/B 04/2017

TO-92

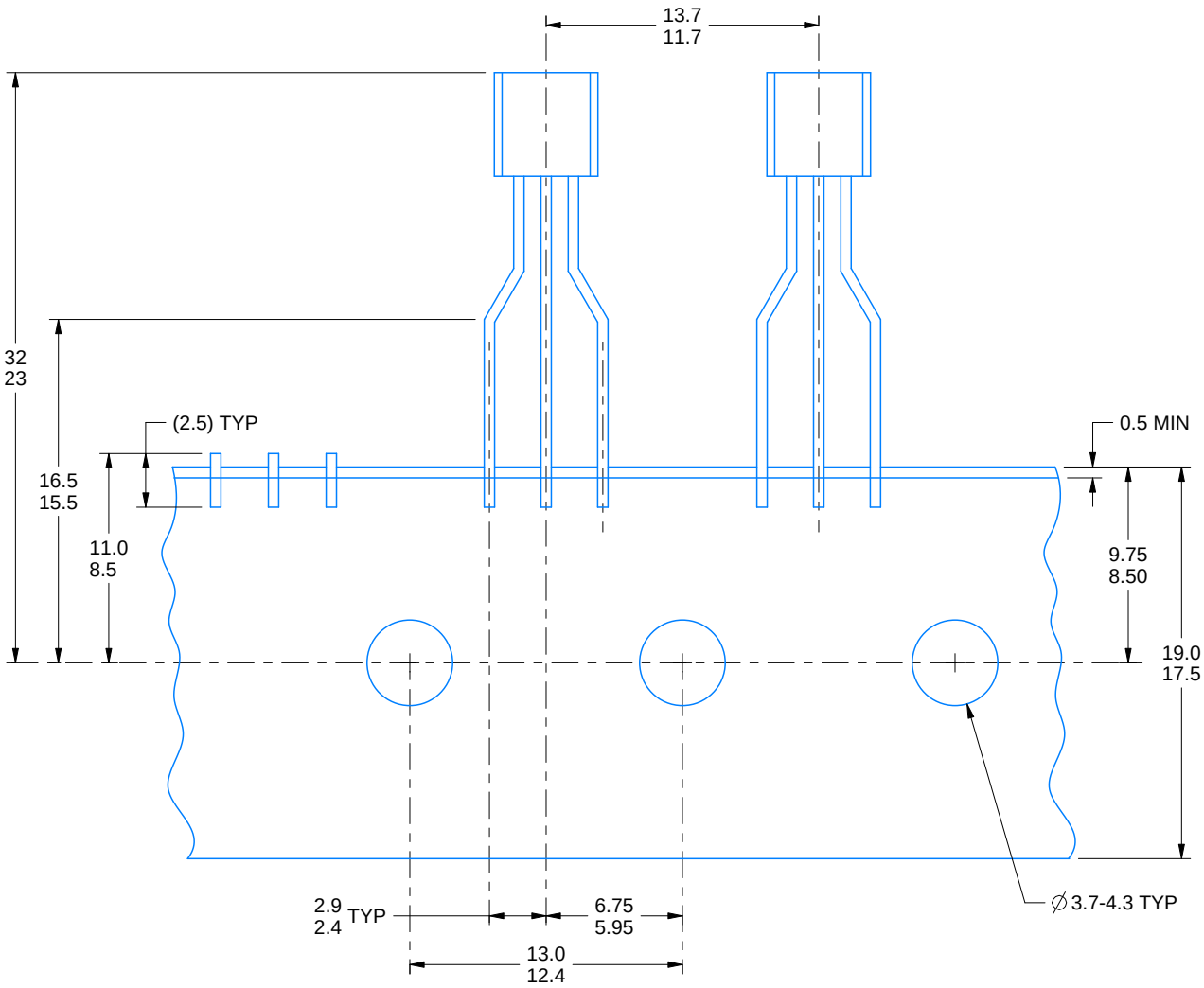

FOR FORMED LEAD OPTION PACKAGE

4215214/B 04/2017

NDU0002A

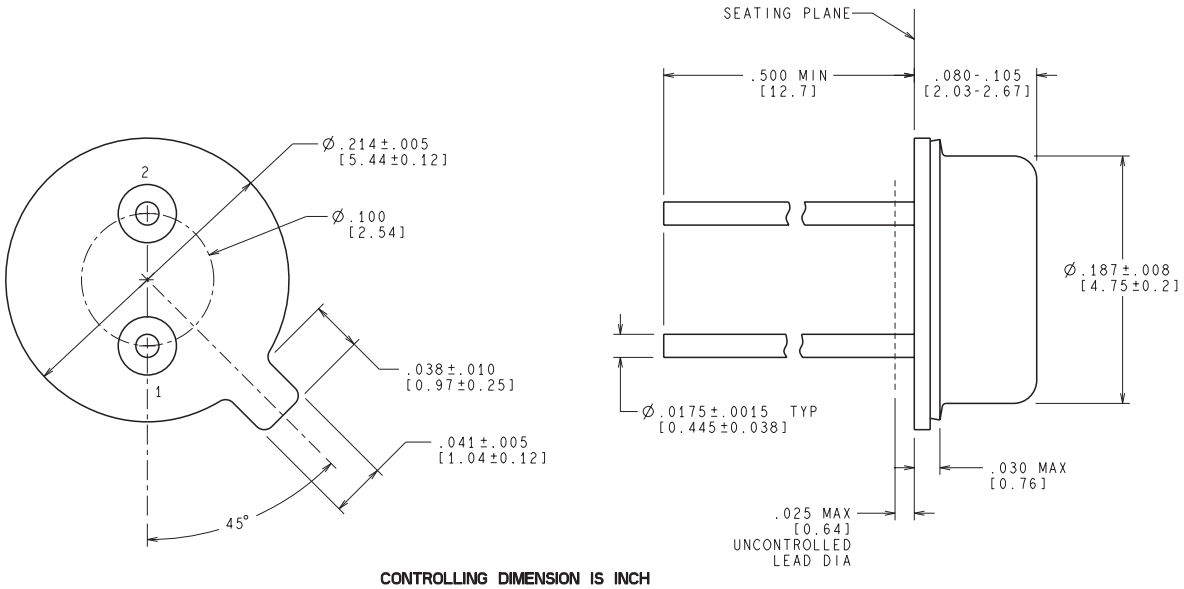

CONTROLLING DIMENSION IS INCH
VALUES IN [ ] ARE MILLIMETERS

H02A (Rev F)

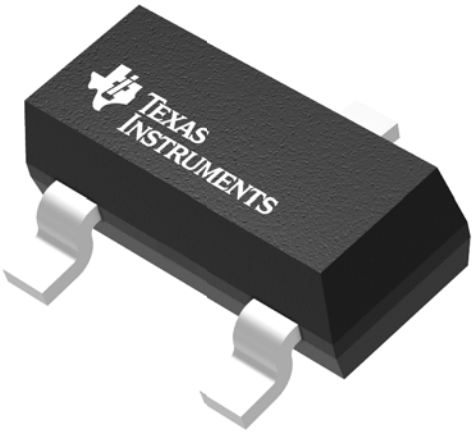

Images above are just a representation of the package family, actual package may vary.
Refer to the product data sheet for package details.

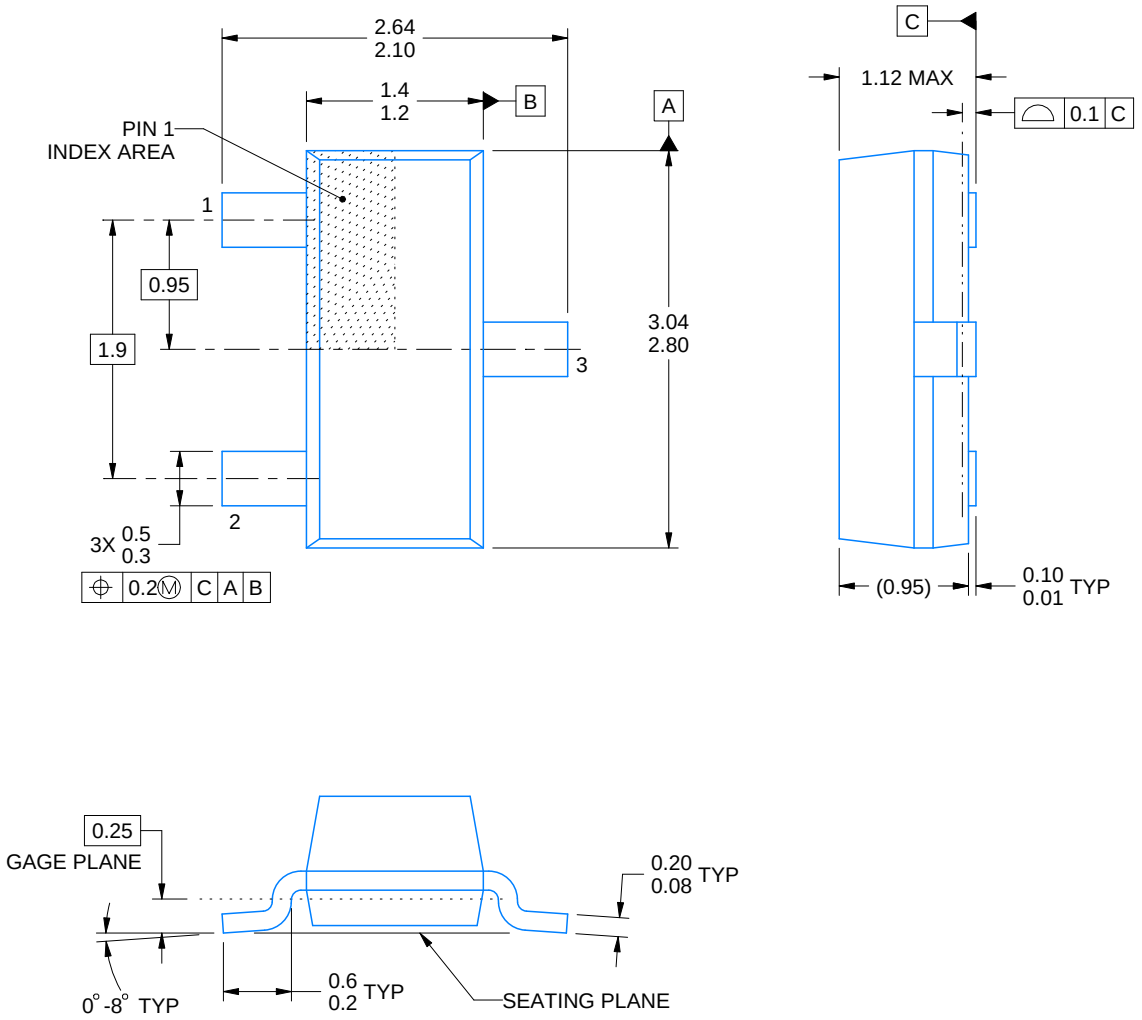

4214838/C 04/2017

NOTES:

1. All linear dimensions are in millimeters. Any dimensions in parenthesis are for reference only. Dimensioning and tolerancing per ASME Y14.5M.
2. This drawing is subject to change without notice.
3. Reference JEDEC registration TO-236, except minimum foot length.

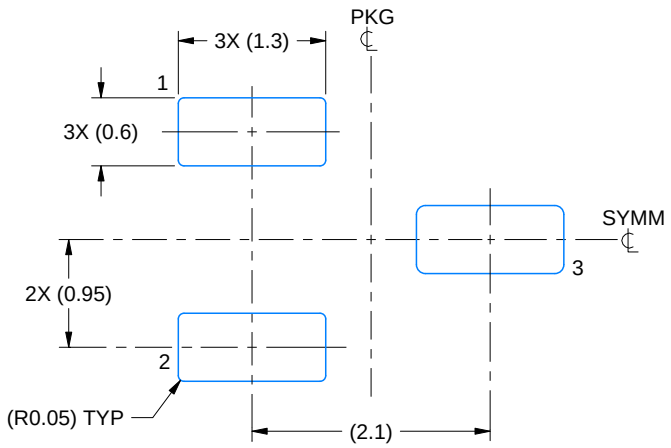

LAND PATTERN EXAMPLE
SCALE:15X

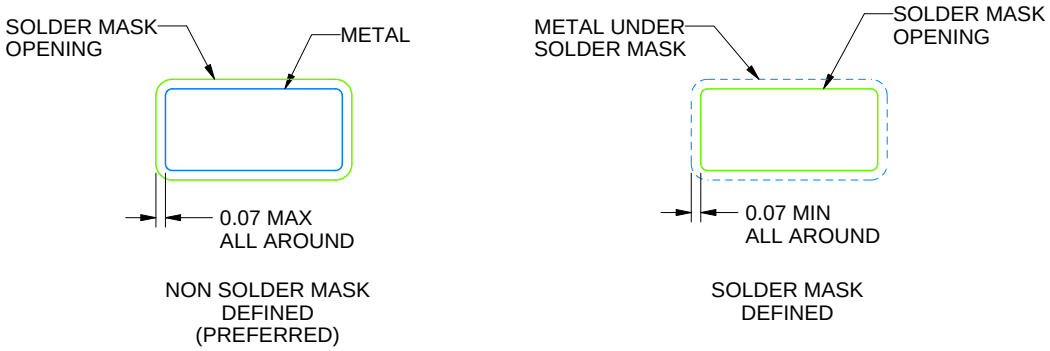

SOLDER MASK DETAILS

4214838/C 04/2017

NOTES: (continued)

4. Publication IPC-7351 may have alternate designs.
5. Solder mask tolerances between and around signal pads can vary based on board fabrication site.

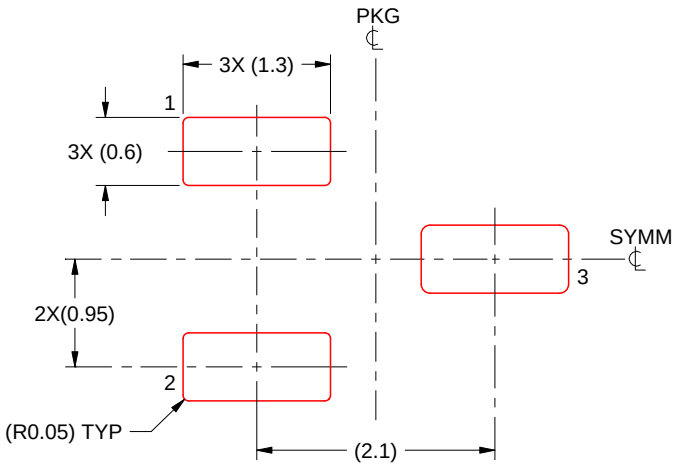

SOLDER PASTE EXAMPLE
BASED ON 0.125 THICK STENCIL
SCALE:15X

4214838/C 04/2017

NOTES: (continued)

6. Laser cutting apertures with trapezoidal walls and rounded corners may offer better paste release. IPC-7525 may have alternate design recommendations.
7. Board assembly site may have different recommendations for stencil design.

IMPORTANT NOTICE AND DISCLAIMER

TI PROVIDES TECHNICAL AND RELIABILITY DATA (INCLUDING DATA SHEETS), DESIGN RESOURCES (INCLUDING REFERENCE DESIGNS), APPLICATION OR OTHER DESIGN ADVICE, WEB TOOLS, SAFETY INFORMATION, AND OTHER RESOURCES “AS IS” AND WITH ALL FAULTS, AND DISCLAIMS ALL WARRANTIES, EXPRESS AND IMPLIED, INCLUDING WITHOUT LIMITATION ANY IMPLIED WARRANTIES OF MERCHANTABILITY, FITNESS FOR A PARTICULAR PURPOSE OR NON-INFRINGEMENT OF THIRD PARTY INTELLECTUAL PROPERTY RIGHTS.

These resources are intended for skilled developers designing with TI products. You are solely responsible for (1) selecting the appropriate TI products for your application, (2) designing, validating and testing your application, and (3) ensuring your application meets applicable standards, and any other safety, security, regulatory or other requirements.

These resources are subject to change without notice. TI grants you permission to use these resources only for development of an application that uses the TI products described in the resource. Other reproduction and display of these resources is prohibited. No license is granted to any other TI intellectual property right or to any third party intellectual property right. TI disclaims responsibility for, and you will fully indemnify TI and its representatives against, any claims, damages, costs, losses, and liabilities arising out of your use of these resources.

TI’s products are provided subject to TI’s Terms of Sale or other applicable terms available either on ti.com or provided in conjunction with such TI products. TI’s provision of these resources does not expand or otherwise alter TI’s applicable warranties or warranty disclaimers for TI products.

TI objects to and rejects any additional or different terms you may have proposed.

Mailing Address: Texas Instruments, Post Office Box 655303, Dallas, Texas 75265
Copyright © 2022, Texas Instruments Incorporated