具有 ±16kV IEC ESD 的 SN65HVD147x 3.3V 全双工 RS-485 收发器

1 特性

- 提供 1/8 单元负载选项
  - 一条总线上多达 256 个节点
- 总线 I/O 保护
  - > ±30kV 人体放电模式 (HBM) 保护
  - > ±16kV IEC 61000-4-2 接触放电
  - > ±4kV IEC61000-4-4 快速瞬态突发
- 扩展的工业温度范围：
  -40°C 至 125°C
- 用于噪声抑制的较大接收器滞后 (70mV)
- 低功耗
  - < 1.1mA 的静态工作电流
  - 低待机电源电流：典型值 10nA，
    低于 5μA（最大值）
- 针对热插拔应用的无干扰加电和断电 保护
- 与 3.3V 或 5V 控制器兼容的 5V 耐压逻辑输入
- 针对以下信号传输速率进行了优化：
  400 kbps (1470, 1471)、20 Mbps (1473, 1474)、
  50 Mbps (1476, 1477)

2 应用

- 工业自动化
- 编码器和解码器
- 楼宇自动化
- 安全和监控网络
- 电信

3 说明

SN65HVD147x 系列全双工收发器特有 RS-485 产品组合中最高的静电放电 (ESD) 保护，从而支持 ±16kV IEC 61000-4-2 接触放电和大于 ±30kV 的人体放电模式 (HBM) ESD 保护。这些 RS-485 收发器具有稳健耐用的 3.3V 驱动器和接收器，并且采用标准小外形尺寸集成电路 (SOIC) 以及小型表面贴装小外形尺寸 (MSOP) 封装。SN65HVD147x 器件的较大接收器滞后提供对传导差分噪声的抗扰度，并且较宽工作温度范围可保证器件在恶劣工作环境中实现稳定。

这些器件的每一个都组装有一个差分驱动器和一个差分接收器，这两个器件由一个 3.3V 单电源供电运行。每个驱动器和接收器都具有用于全双工总线通信设计的独立输入和输出引脚。这些器件均具有宽共模电压范围，因此非常适合长电缆上的多点 应用 。

SN65HVD1471，SN65HVD1474 和 SN65HVD1477 器件无需外部使能引脚即可完全启用。

SN65HVD1470，SN65HVD1473 和 SN65HVD1476 器件具有高电平有效驱动器使能和低电平有效接收器使能。禁用驱动器和接收器可实现少于 5μA 的低待机电流。

这些器件额定运行温度范围为 -40°C 至 125°C。

器件信息(1)

器件型号	封装	封装尺寸（标称值）
SN65HVD1471 SN65HVD1474 SN65HVD1477	MSOP (8)	3.00mm × 3.00mm
	SOIC (8)	4.90mm × 3.91mm
SN65HVD1470 SN65HVD1473 SN65HVD1476	MSOP (10)	3.00mm x 3.00mm
	SOIC (14)	8.65mm x 3.91mm

(1) 如需了解所有可用封装，请参阅数据表末尾的可订购产品附录。

方框图

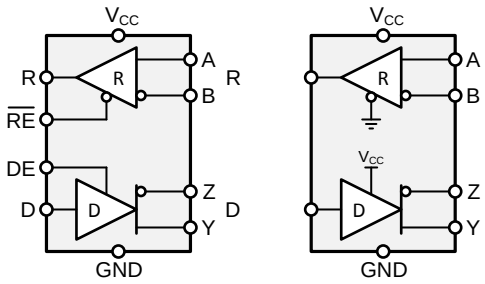

SN65HVD1470, SN65HVD1473, and SN65HVD1476

SN65HVD1471, SN65HVD1474, and SN65HVD1477

本文档旨在为方便起见，提供有关 TI 产品中文版本的信息，以确认产品的概要。 有关适用的官方英文版本的最新信息，请访问 www.ti.com，其内容始终优先。 TI 不保证翻译的准确性和有效性。 在实际设计之前，请务必参考最新版本的英文版本。

目录

1 特性 ... 1
2 应用 ... 1
3 说明 ... 1
4 修订历史记录 ... 2
5 Device Comparison Table ... 3
6 Pin Configuration and Functions ... 3
7 Specifications ... 6
7.1 Absolute Maximum Ratings ... 6
7.2 ESD Ratings ... 6
7.3 Recommended Operating Conditions ... 7
7.4 Thermal Information — D Packages ... 7
7.5 Thermal Information — DGS and DGK Packages ... 7
7.6 Power Dissipation ... 8
7.7 Electrical Characteristics ... 8
7.8 Switching Characteristics — 400 kbps ... 9
7.9 Switching Characteristics — 20 Mbps ... 10
7.10 Switching Characteristics — 50 Mbps ... 10
7.11 Typical Characteristics ... 11
8 Parameter Measurement Information ... 13
9 Detailed Description ... 17
9.1 Overview ... 17
9.2 Functional Block Diagram ... 17
9.3 Feature Description ... 17
9.4 Device Functional Modes ... 17
10 Application and Implementation ... 20
10.1 Application Information ... 20
10.2 Typical Application ... 20
11 Power Supply Recommendations ... 26
12 Layout ... 26
12.1 Layout Guidelines ... 26
12.2 Layout Example ... 27
13 器件和文档支持 ... 28
13.1 器件支持 ... 28
13.2 相关链接 ... 28
13.3 接收文档更新通知 ... 28
13.4 社区资源 ... 28
13.5 商标 ... 28
13.6 静电放电警告 ... 28
13.7 术语表 ... 28
14 机械、封装和可订购信息 ... 28

4 修订历史记录

注：之前版本的页码可能与当前版本有所不同。

Changes from Revision D (October 2014) to Revision E	Page
• Changed the *Pin Configuration* images	3
• Changed the Supply Voltage MAX value From: 5.5 V To 5 V in the *Absolute Maximum Ratings*	6
• Moved Storage Temperature From the ESD table to the *Absolute Maximum Ratings*	6
• Changed the Handling Ratings table to *ESD Ratings*	6
• Added Note: to Supply voltage in the *Recommended Operating Conditions*	7

Changes from Revision C (August 2014) to Revision D	Page
• Updated the MSOP–10 logic diagram	4

Changes from Revision B (July 2014) to Revision C	Page
• Updated the *Device Comparison Table*	3

Changes from Revision A (June 2014) to Revision B	Page
• Updated SN65HVD1470 and SN65HVD1471 specifications to production values	3

Changes from Original (May 2014) to Revision A	Page
• 已更改 器件状态从 *产品预览* 更改为 *生产数据*（混合状态）	1

Copyright © 2014–2019, Texas Instruments Incorporated

5 Device Comparison Table

PART NUMBER(1)	SIGNALING RATE	DUPLEX	ENABLES	PACKAGE	NODES
SN65HVD1470	up to 400 kbps	Full	DE, $\overline{RE}$	SOIC-14 MSOP-10	256
SN65HVD1471	up to 400 kbps	Full	None	SOIC-8 MSOP-8	256
SN65HVD1473	up to 20 Mbps	Full	DE, $\overline{RE}$	SOIC-14 MSOP-10	256
SN65HVD1474	up to 20 Mbps	Full	None	SOIC-8 MSOP-8	256
SN65HVD1476	up to 50 Mbps	Full	DE, $\overline{RE}$	SOIC-14 MSOP-10	96
SN65HVD1477	up to 50 Mbps	Full	None	SOIC-8 MSOP-8	96

(1) For device status, see the *机械、封装和可订购信息* section.

6 Pin Configuration and Functions

SN65HVD1471, SN65HVD1474, SN65HVD1477
8-Pin SOIC, D Package, and 8-Pin MSOP, DGK Package
(Top View)

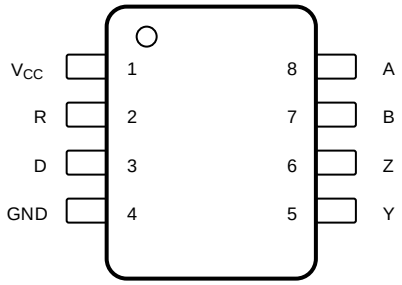

Not to scale

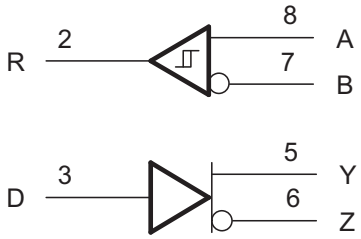

Pin Functions — SOIC-8 and MSOP-8

PIN		TYPE	DESCRIPTION
NAME	NO.		
V_{CC}	1	Supply	3-V to 3.6-V supply
R	2	Digital output	Receive data output
D	3	Digital input	Driver data input
GND	4	Reference potential	Local device ground
Y	5	Bus output	Digital bus output, Y (Complementary to Z)
Z	6	Bus output	Digital bus output, Z (Complementary to Y)
B	7	Bus input	Digital bus input, B (Complementary to A)
A	8	Bus input	Digital bus input, A (Complementary to B)

Copyright © 2014–2019, Texas Instruments Incorporated

SN65HVD1470, SN65HVD1473, SN65HVD1476
10-Pin MSOP, DGS Package
(Top View)

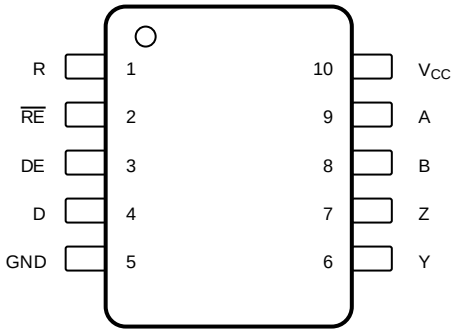

Not to scale

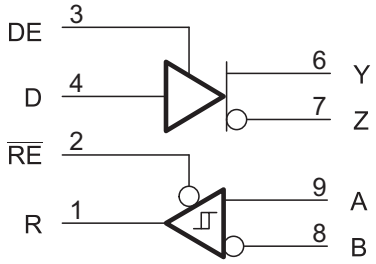

Pin Functions — MSOP–10

PIN		TYPE	DESCRIPTION
NAME	NO.		
R	1	Digital output	Receive data output
$\overline{RE}$	2	Digital input	Receive enable *Low*
DE	3	Digital input	Driver enable *High*
D	4	Digital input	Driver data input
GND	5	Reference potential	Local device ground
Y	6	Bus output	Digital bus output, Y (Complementary to Z)
Z	7	Bus output	Digital bus output, Z (Complementary to Y)
B	8	Bus input	Digital bus input, B (Complementary to A)
A	9	Bus input	Digital bus input, A (Complementary to B)
V_{CC}	10	Supply	3-V to 3.6-V supply

Copyright © 2014–2019, Texas Instruments Incorporated

SN65HVD1470, SN65HVD1473, SN65HVD1476
14-Pin SOIC, D Package
(Top View)

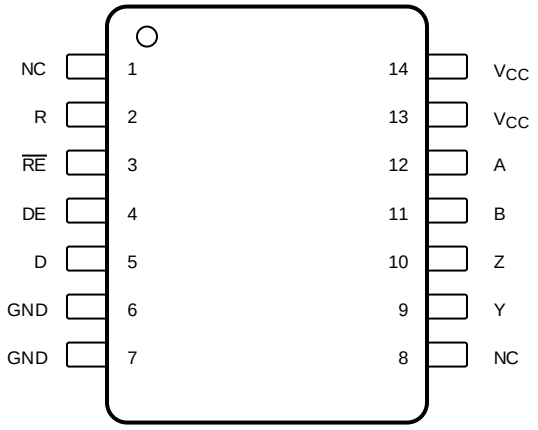

Not to scale

NC = no internal connection

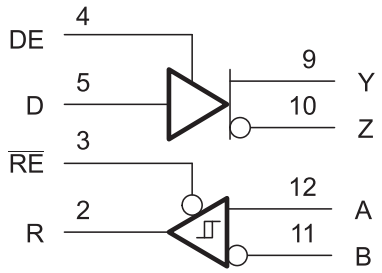

Pin Functions — SOIC-14

PIN		TYPE	DESCRIPTION
NAME	NO.		
NC	1	No connect	Not connected
	8		
R	2	Digital output	Receive data output
$\overline{RE}$	3	Digital input	Receive enable *Low*
DE	4	Digital input	Driver enable *High*
D	5	Digital input	Driver data input
GND	6 (1)	Reference potential	Local device ground
	7 (1)		
Y	9	Bus output	Digital bus output, Y (Complementary to Z)
Z	10	Bus output	Digital bus output, Z (Complementary to Y)
B	11	Bus input	Digital bus input, B (Complementary to A)
A	12	Bus input	Digital bus input, A (Complementary to B)
V_{CC}	13 (2)	Supply	3-V to 3.6-V supply
	14 (2)		

(1) Pin 6 and pin 7 are connected internally.
(2) Pin 13 and pin 14 are connected internally.

Copyright © 2014–2019, Texas Instruments Incorporated

7 Specifications

7.1 Absolute Maximum Ratings

over operating free-air temperature range (unless otherwise noted)[1]

		MIN	MAX	UNIT
Supply voltage	V_{CC}	–0.5	5	V
Voltage	Range at any bus pin (A, B, Y, or Z)	–13	16.5	V
Input voltage	Range at any logic pin (D, DE, or $\overline{RE}$)	–0.3	5.7	V
	Voltage input range, transient pulse, any bus pin (A, B, Y, or Z) through 100 Ω	–100	100	V
Output current	Receiver output	–24	24	mA
Junction temperature, T_J			170	°C
Storage temperature range, T_{stg}		–65	150	°C
Continuous total power dissipation		See the *Thermal Information* table		

(1) Stresses beyond those listed under *absolute maximum ratings* may cause permanent damage to the device. These are stress ratings only and functional operation of the device at these or any other conditions beyond those indicated under *recommended operating conditions* is not implied. Exposure to absolute-maximum-rated conditions for extended periods may affect device reliability.

7.2 ESD Ratings

			VALUE	UNIT
$V_{(ESD)}$	Electrostatic discharge	IEC 61000-4-2 ESD (Contact Discharge), bus pins and GND	±16000	V
		IEC 61000-4-2 ESD (Air-Gap Discharge), bus pins and GND[1][2]	±16000	V
		IEC 61000-4-4 EFT (Fast transient or burst), bus pins and GND	±4000	V
		IEC 60749-26 ESD (Human Body Model), bus pins and GND[2]	±30000	V
		Human body model (HBM), bus pins and GND[3]	±40000	V
		Human body model (HBM), per JEDEC specification JESD22-A114, all pins	±8000	V
		Charged device model (CDM), per JEDEC specification JESD22-C101, all pins	±1500	V
		Machine model (MM), all pins	±30000	V

(1) By inference from contact-discharge results, see the *Application and Implementation* section
(2) Limited by tester capability.
(3) Modeled performance only; based on measured IEC ESD (Contact) capability.

Copyright © 2014–2019, Texas Instruments Incorporated

7.3 Recommended Operating Conditions

	IEC 61000-4-2 ESD (Contact Discharge), bus pins and GND		MIN	NOM	MAX	UNIT
V_{CC}	Supply voltage (1)		3	3.3	3.6	V
V_I	Input voltage at any bus pin (separately or common mode) (2)		–7		12	V
V_{IH}	High-level input voltage (Driver, driver enable, and receiver enable inputs)		2		V_{CC}	V
V_{IL}	Low-level input voltage (Driver, driver enable, and receiver enable inputs)		0		0.8	V
V_{ID}	Differential input voltage		–12		12	V
I_O	Output current, Driver		–60		60	mA
I_O	Output current, Receiver		–8		8	mA
R_L	Differential load resistance		54	60		Ω
C_L	Differential load capacitance			50		pF
$1/t_{UI}$	Signaling rate	HVD1470, HVD1471			400	kbps
		HVD1473, HVD1474			20	Mbps
		HVD1476, HVD1477			50	Mbps
T_A (3)	Operating free-air temperature (See the *Application and Implementation* for thermal information)		–40		125	°C
T_J	Junction Temperature		–40		150	°C

(1) Exposure to conditions beyond the recommended operation maximum for extended periods may affect device reliability.
(2) The algebraic convention, in which the least positive (most negative) limit is designated as minimum is used in this data sheet.
(3) Operation is specified for internal (junction) temperatures up to 150°C. Self-heating because of internal power dissipation should be considered for each application. Maximum junction temperature is internally limited by the thermal shut-down (TSD) circuit which disables the driver outputs when the junction temperature reaches 170°C.

7.4 Thermal Information — D Packages

THERMAL METRIC		D (8 PINS)	D (14 PINS)	UNIT
$R_{\theta JA}$	Junction-to-ambient thermal resistance	110.7	83.3	°C/W
$R_{\theta JC(top)}$	Junction-to-case (top) thermal resistance	54.7	42.9	°C/W
$R_{\theta JB}$	Junction-to-board thermal resistance	51.3	37.8	°C/W
ψ_{JT}	Junction-to-top characterization parameter	9.2	9.3	°C/W
ψ_{JB}	Junction-to-board characterization parameter	50.7	37.5	°C/W
$T_{J(TSD)}$	Thermal shut-down junction temperature	170		°C

7.5 Thermal Information — DGS and DGK Packages

THERMAL METRIC		DGS (10 PINS)	DGK (8 PINS)	UNIT
$R_{\theta JA}$	Junction-to-ambient thermal resistance	165.5	168.7	°C/W
$R_{\theta JC(top)}$	Junction-to-case (top) thermal resistance	37.7	62.2	°C/W
$R_{\theta JB}$	Junction-to-board thermal resistance	86.4	89.5	°C/W
ψ_{JT}	Junction-to-top characterization parameter	1.4	7.4	°C/W
ψ_{JB}	Junction-to-board characterization parameter	84.8	87.9	°C/W
$T_{J(TSD)}$	Thermal shut-down junction temperature	170		°C

Copyright © 2014–2019, Texas Instruments Incorporated

7.6 Power Dissipation

PARAMETER		TEST CONDITIONS		VALUE	UNIT
PD — Power Dissipation driver and receiver enabled, V_{CC} = 3.6 V, T_J = 150°C, 50% duty cycle square-wave signal at signaling rate: • HVD1470 and HVD1471 at 400 kbps • HVD1473 and HVD1474 at 20 Mbps • HVD1476 and HVD1477 at 50 Mbps	Unterminated	R_L = 300 Ω, C_L = 50 pF (driver)	HVD1470, HVD1471	150	mW
			HVD1473, HVD1474	180	
			HVD1476, HVD1477	220	
	RS-422 load	R_L = 100 Ω, C_L = 50 pF (driver)	HVD1470, HVD1471	190	mW
			HVD1473, HVD1474	220	
			HVD1476, HVD1477	250	
	RS-485 load	R_L = 54 Ω, C_L = 50 pF (driver)	HVD1470, HVD1471	230	mW
			HVD1473, HVD1474	255	
			HVD1476, HVD1477	285	

7.7 Electrical Characteristics

over recommended operating range (unless otherwise specified)

PARAMETER			TEST CONDITIONS			MIN	TYP	MAX	UNIT
$\lvert V_{OD}\rvert$	Driver differential output voltage magnitude		R_L = 60 Ω, 375 Ω on each output to –7 V to 12 V, See Figure 15			1.5	2		V
			R_L = 54 Ω (RS-485), See Figure 16			1.5	2		V
			R_L = 100 Ω (RS-422) T_J ≥ 0°C, V_{CC} ≥ 3.2 V, See Figure 16			2			V
$\Delta\lvert V_{OD}\rvert$	Change in magnitude of driver differential output voltage		R_L = 54 Ω, C_L = 50 pF, See Figure 16			–50	0	50	mV
$V_{OC(SS)}$	Steady-state common-mode output voltage		Center of two 27-Ω load resistors, See Figure 16			1	V_{CC} / 2	3	V
ΔV_{OC}	Change in differential driver output common-mode voltage					–50	0	50	mV
$V_{OC(PP)}$	Peak-to-peak driver common-mode output voltage						500		mV
C_{OD}	Differential output capacitance						15		pF
V_{IT+}	Positive-going receiver differential input voltage threshold					See (1)	-70	–20	mV
V_{IT-}	Negative-going receiver differential input voltage threshold					–200	-140	See (1)	mV
V_{hys}	Receiver differential input voltage threshold hysteresis ($V_{IT+} – V_{IT-}$)					40	70		mV
V_{OH}	Receiver high-level output voltage		I_{OH} = –8 mA			2.4	V_{CC}–0.3		V
V_{OL}	Receiver low-level output voltage		I_{OL} = 8 mA				0.2	0.4	V
I_I	Driver input, driver enable, and receiver enable input current					–3		3	µA
I_{OZ}	Receiver output high-impedance current	HVD1470, HVD1473, HVD1476	V_O = 0 V or V_{CC}, $\overline{RE}$ = V_{CC}			–1		1	µA
I_{OS}	Driver short-circuit output current					–150		150	mA
I_I	Bus input current (disabled driver)		V_{CC} = 0 to ROC (max), DE = GND	HVD1470, HVD1473	V_I = 12 V		75	125	µA
					V_I = –7 V	–100	–40		
				HVD1476	V_I = 12 V		240	333	
					V_I = –7 V	–267	–180		
I_{CC}	Supply current (quiescent)		Driver and Receiver enabled	DE = V_{CC}, $\overline{RE}$ = GND, No load			750	1100	µA
			Driver enabled, receiver disabled	DE = V_{CC}, $\overline{RE}$ = V_{CC}, No load			350	650	µA
			Driver disabled, receiver enabled	DE = GND, $\overline{RE}$ = GND, No load			650	800	µA
			Driver and receiver disabled	DE = GND, D = open, $\overline{RE}$ = V_{CC}, No load			0.1	5	µA

(1) Under any specific conditions, V_{IT+} is assured to be at least V_{hys} higher than V_{IT-}.

Copyright © 2014–2019, Texas Instruments Incorporated

Electrical Characteristics (continued)

over recommended operating range (unless otherwise specified)

PARAMETER		TEST CONDITIONS	MIN	TYP	MAX	UNIT
	Supply current (dynamic)	See the *Typical Characteristics* section				
T_{sd}	Thermal Shut-down junction temperature				170	°C

7.8 Switching Characteristics — 400 kbps

400-kbps devices (SN65HVD1470, SN65HVD1471) bit time ≥ 2 µs (over recommended operating conditions)

PARAMETER			TEST CONDITIONS		MIN	TYP	MAX	UNIT
DRIVER								
t_r, t_f	Driver differential output rise/fall time		R_L = 54 Ω, C_L = 50 pF	See Figure 17	100	400	750	ns
t_{PHL}, t_{PLH}	Driver propagation delay					350	550	ns
$t_{SK(P)}$	Driver pulse skew, $\lvert t_{PHL} - t_{PLH} \rvert$						40	ns
t_{PHZ}, t_{PLZ}	Driver disable time	HVD1470		See Figure 18 and Figure 19		50	200	ns
t_{PZH}, t_{PZL}	Driver enable time		Receiver enabled			300	750	ns
			Receiver disabled			3	8	µs
RECEIVER								
t_r, t_f	Receiver output rise/fall time		C_L = 15 pF	See Figure 20		13	25	ns
t_{PHL}, t_{PLH}	Receiver propagation delay time					70	110	ns
$t_{SK(P)}$	Receiver pulse skew, $\lvert t_{PHL} - t_{PLH} \rvert$						7	ns
t_{PLZ}, t_{PHZ}	Receiver disable time	HVD1470				45	60	ns
$t_{PZL(1)}$, $t_{PZH(1)}$ $t_{PZL(2)}$, $t_{PZH(2)}$	Receiver enable time		Driver enabled	See Figure 21		20	115	ns
			Driver disabled	See Figure 22		3	8	µs

Copyright © 2014–2019, Texas Instruments Incorporated

7.9 Switching Characteristics — 20 Mbps

20-Mbps devices (SN65HVD1473, SN65HVD1474) bit time ≥ 50 ns (over recommended operating conditions)

PARAMETER			TEST CONDITIONS		MIN	TYP	MAX	UNIT
DRIVER								
t_r, t_f	Driver differential output rise/fall time		R_L = 54 Ω, C_L = 50 pF	See Figure 17	4	7	14	ns
t_{PHL}, t_{PLH}	Driver propagation delay				4	10	20	ns
$t_{SK(P)}$	Driver pulse skew, $\|t_{PHL} – t_{PLH}\|$					0	4	ns
t_{PHZ}, t_{PLZ}	Driver disable time	HVD1473		See Figure 18 and Figure 19		12	25	ns
t_{PZH}, t_{PZL}	Driver enable time		Receiver enabled			10	20	ns
			Receiver disabled			3	8	µs
RECEIVER								
t_r, t_f	Receiver output rise/fall time		C_L = 15 pF	See Figure 20		5	10	ns
t_{PHL}, t_{PLH}	Receiver propagation delay time					60	90	ns
$t_{SK(P)}$	Receiver pulse skew, $\|t_{PHL} – t_{PLH}\|$					0	5	ns
t_{PLZ}, t_{PHZ}	Receiver disable time	HVD1473				17	25	ns
$t_{pZL(1)}$, $t_{PZH(1)}$ $t_{PZL(2)}$, $t_{PZH(2)}$	Receiver enable time		Driver enabled	See Figure 21		12	90	ns
			Driver disabled	See Figure 22		3	8	µs

7.10 Switching Characteristics — 50 Mbps

50-Mbps devices (SN65HVD1476, SN65HVD1477) bit time ≥ 20 ns (over recommended operating conditions)

PARAMETER			TEST CONDITIONS		MIN	TYP	MAX	UNIT
DRIVER								
t_r, t_f	Driver differential output rise/fall time		R_L = 54 Ω, C_L = 50 pF	See Figure 17	2	3	6	ns
t_{PHL}, t_{PLH}	Driver propagation delay				3	10	16	ns
$t_{SK(P)}$	Driver pulse skew, $\|t_{PHL} – t_{PLH}\|$					0	3.5	ns
t_{PHZ}, t_{PLZ}	Driver disable time	HVD1476		See Figure 18 and Figure 19		10	20	ns
t_{PZH}, t_{PZL}	Driver enable time		Receiver enabled			10	20	ns
			Receiver disabled			3	8	µs
RECEIVER								
t_r, t_f	Receiver output rise/fall time		C_L = 15 pF	See Figure 20	1	3	6	ns
t_{PHL}, t_{PLH}	Receiver propagation delay time					25	40	ns
$t_{SK(P)}$	Receiver pulse skew, $\|t_{PHL} – t_{PLH}\|$					0	2	ns
t_{PLZ}, t_{PHZ}	Receiver disable time	HVD1476				8	15	ns
$t_{pZL(1)}$, $t_{PZH(1)}$ $t_{PZL(2)}$, $t_{PZH(2)}$	Receiver enable time		Driver enabled	See Figure 21		8	90	ns
			Driver disabled	See Figure 22		3	8	µs

Copyright © 2014–2019, Texas Instruments Incorporated

7.11 Typical Characteristics

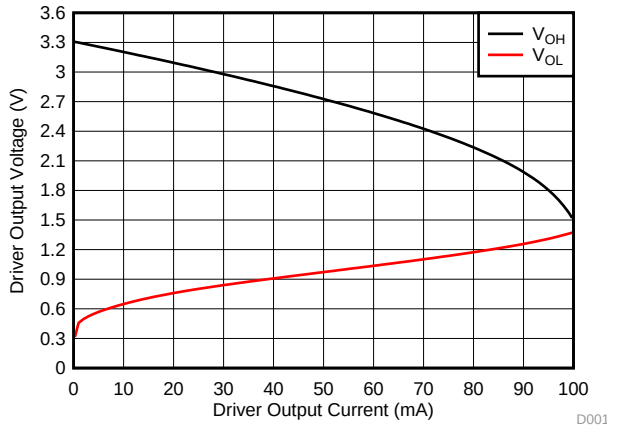

Figure 1. Driver Output Voltage vs Driver Output Current

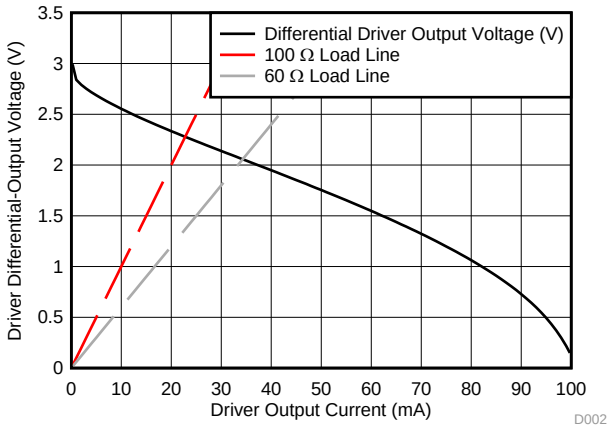

Figure 2. Driver Differential-Output Voltage vs Driver Output Current

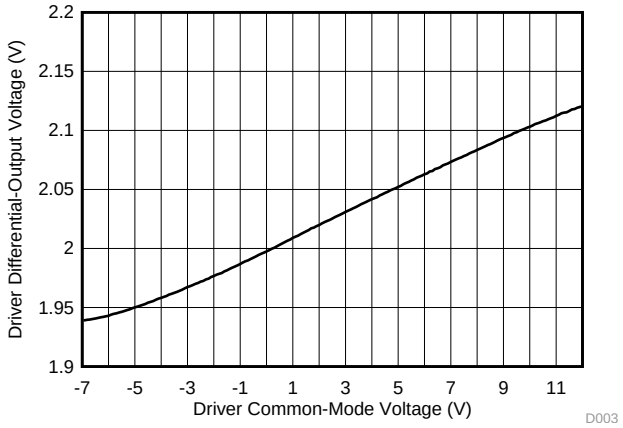

Figure 3. Driver Differential-Output Voltage vs Driver Common-Mode Voltage

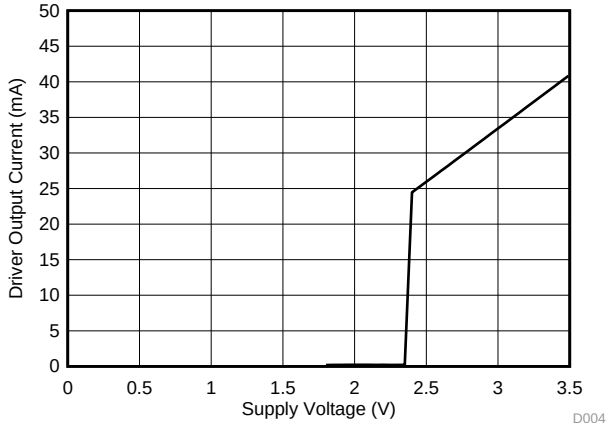

Figure 4. Driver Output Current vs Supply Voltage

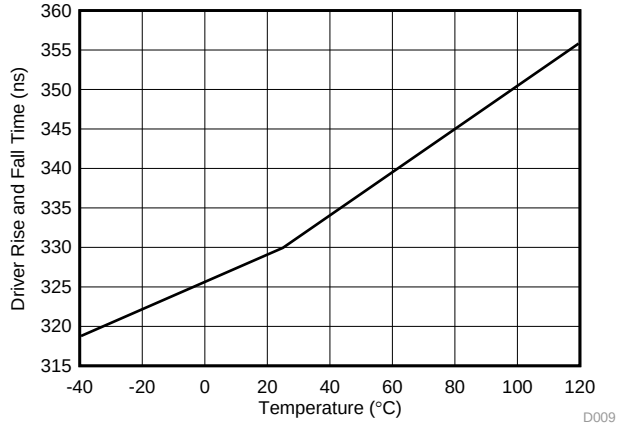

Figure 5. SN65HVD1470, SN65HVD1471 Driver Rise and Fall Time vs Temperature

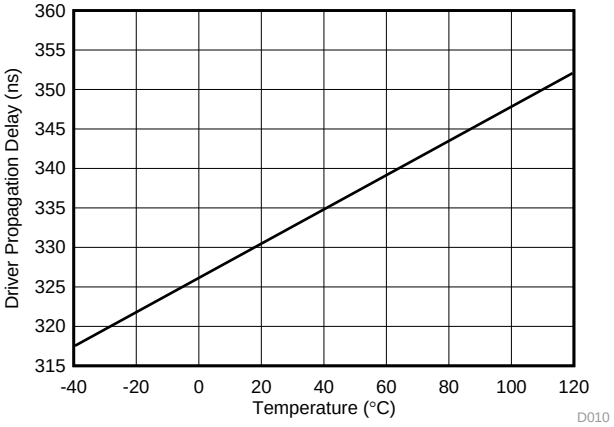

Figure 6. SN65HVD1470, SN65HVD1471 Driver Propagation Delay vs Temperature

Copyright © 2014–2019, Texas Instruments Incorporated

Typical Characteristics (continued)

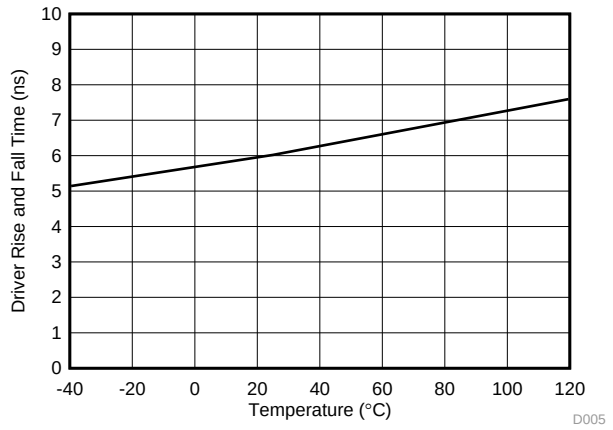

Figure 7. SN65HVD1473, SN65HVD1474 Driver Rise and Fall Time vs Temperature

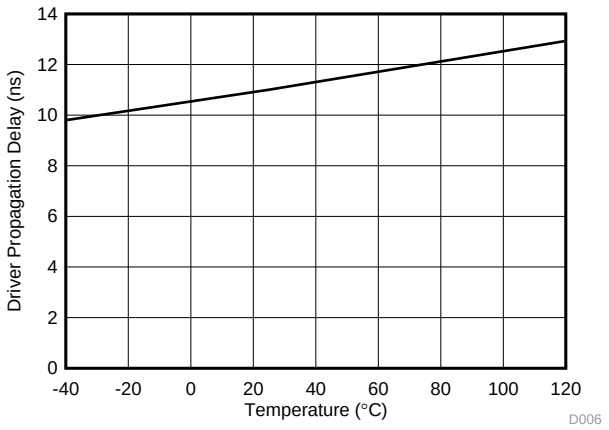

Figure 8. SN65HVD1473, SN65HVD1474 Driver Propagation Delay vs Temperature

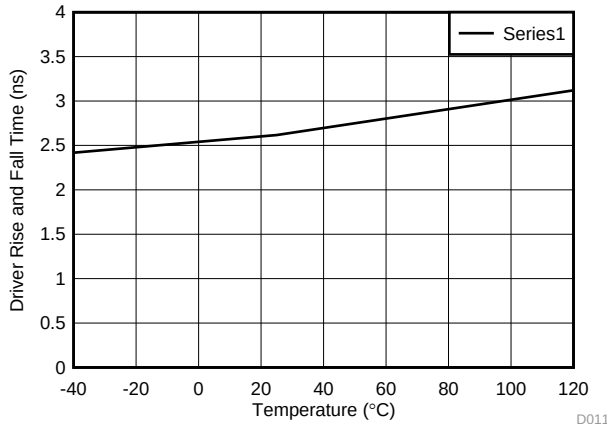

Figure 9. SN65HVD1476, SN65HVD1477 Driver Rise and Fall Time vs Temperature

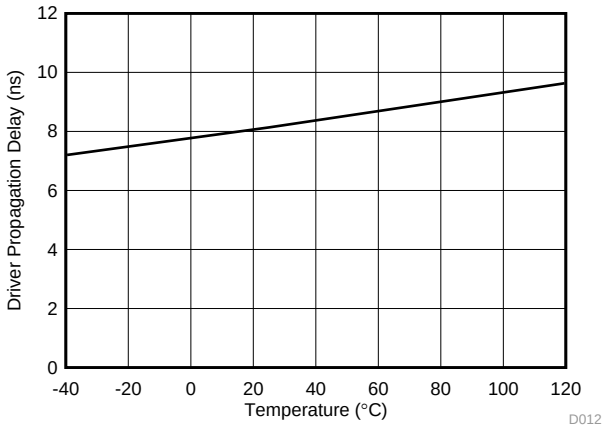

Figure 10. SN65HVD1476, SN65HVD1477 Driver Propagation Delay vs Temperature

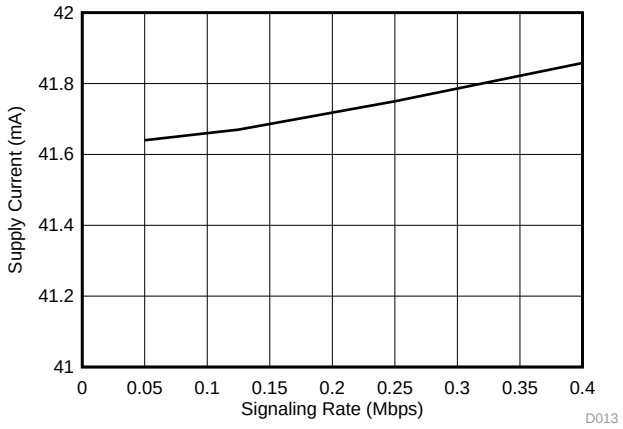

Figure 11. SN65HVD1470, SN65HVD1471 Supply Current vs Signal Rate

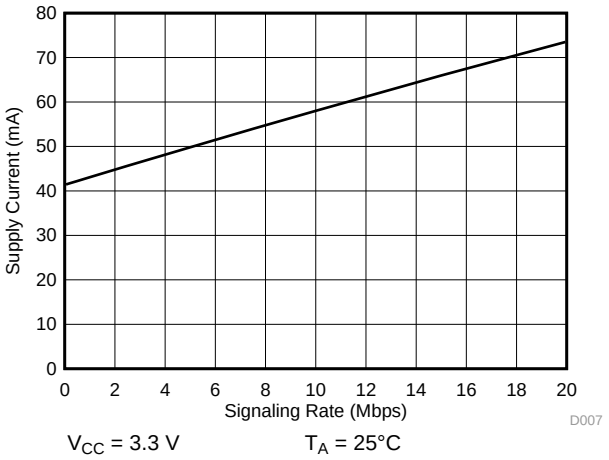

Figure 12. SN65HVD1473, SN65HVD1474 Supply Current vs Signal Rate

Copyright © 2014–2019, Texas Instruments Incorporated

Typical Characteristics (continued)

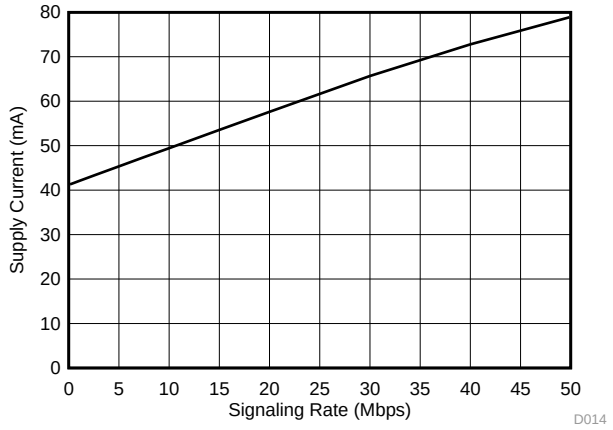

Figure 13. SN65HVD1476, SN65HVD1477 Supply Current vs Signal Rate

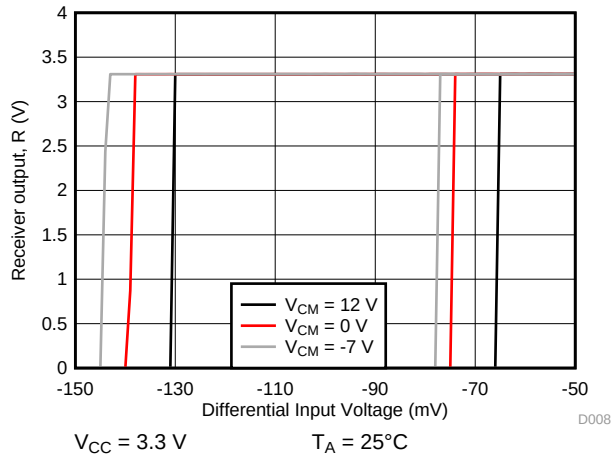

Figure 14. Receiver Output vs Input

8 Parameter Measurement Information

The input generator rate is 100 kbps with 50% duty cycle, than 6-ns rise and fall times, and 50-Ω output impedance.

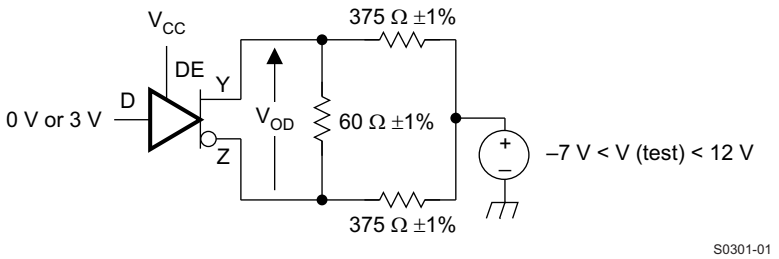

Figure 15. Measurement of Driver Differential Output Voltage With Common-Mode Load

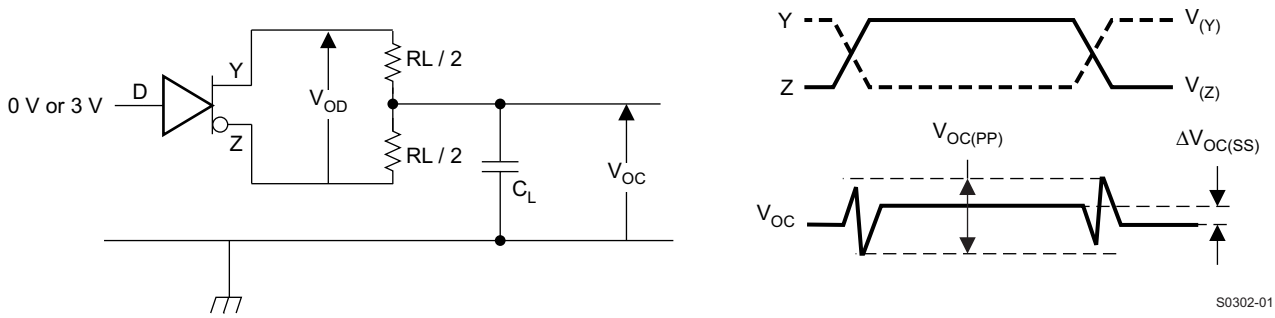

Figure 16. Measurement of Driver Differential and Common-Mode Output With RS-485 Load

Parameter Measurement Information (continued)

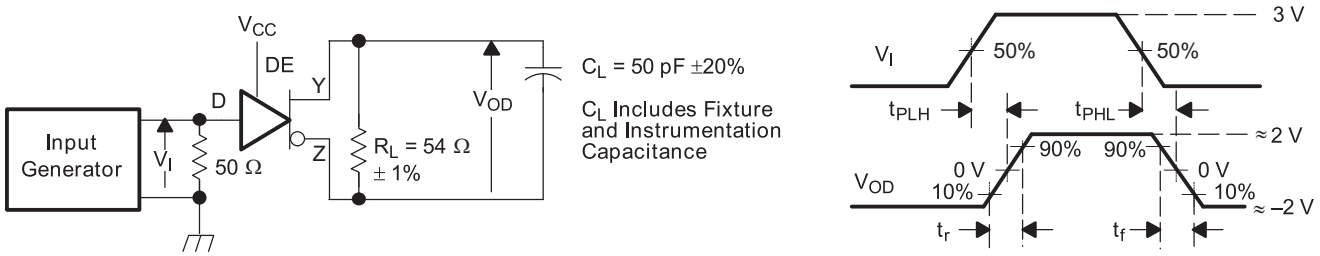

Figure 17. Measurement of Driver Differential Output Rise and Fall Times and Propagation Delays

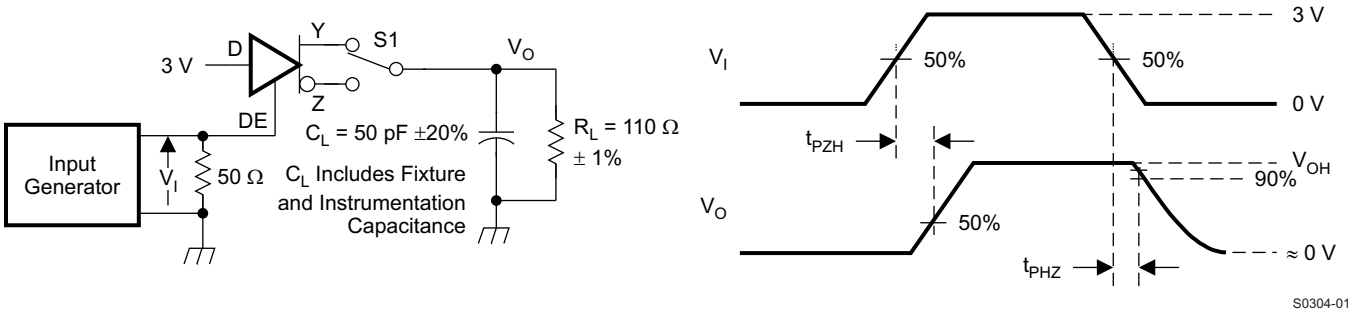

D at 3 V to test non-inverting output, D at 0 V to test inverting output.

Figure 18. Measurement of Driver Enable and Disable Times with Active-High Output and Pulldown Load

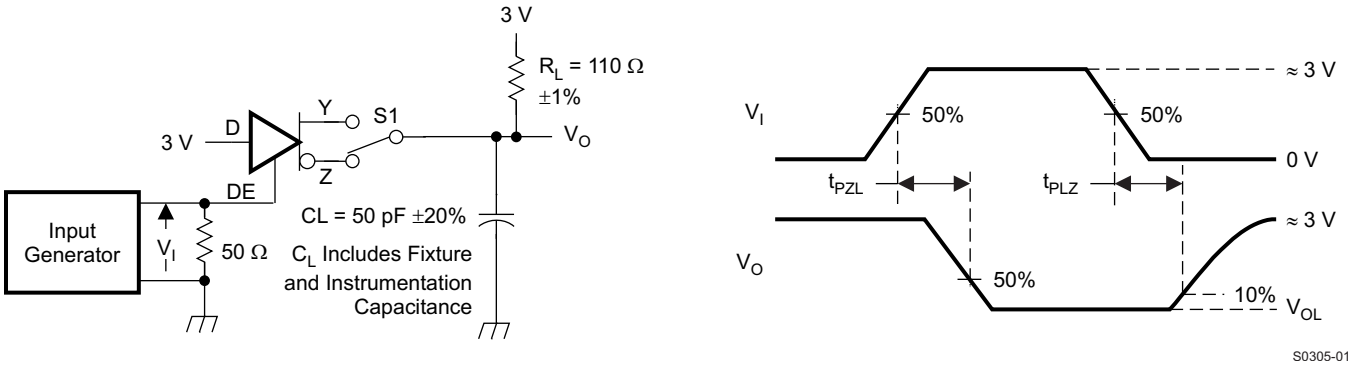

D at 0 V to test non-inverting output, D at 3 V to test inverting output.

Figure 19. Measurement of Driver Enable and Disable Times with Active-Low Output and Pullup Load

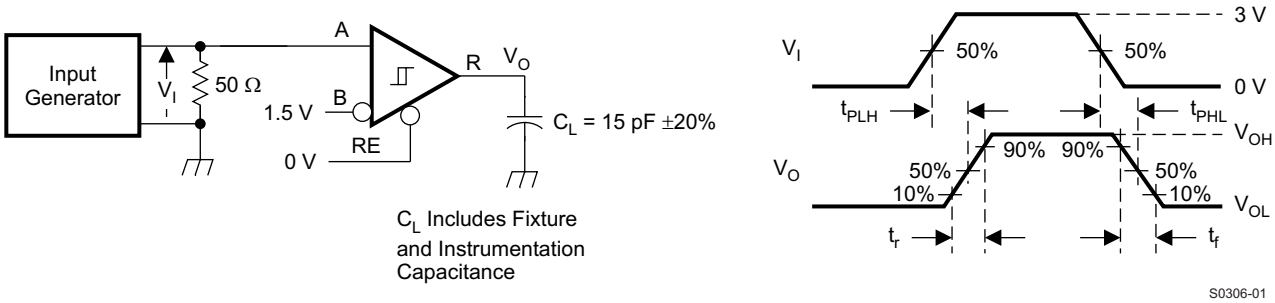

Figure 20. Measurement of Receiver Output Rise and Fall Times and Propagation Delays

Copyright © 2014–2019, Texas Instruments Incorporated

Parameter Measurement Information (continued)

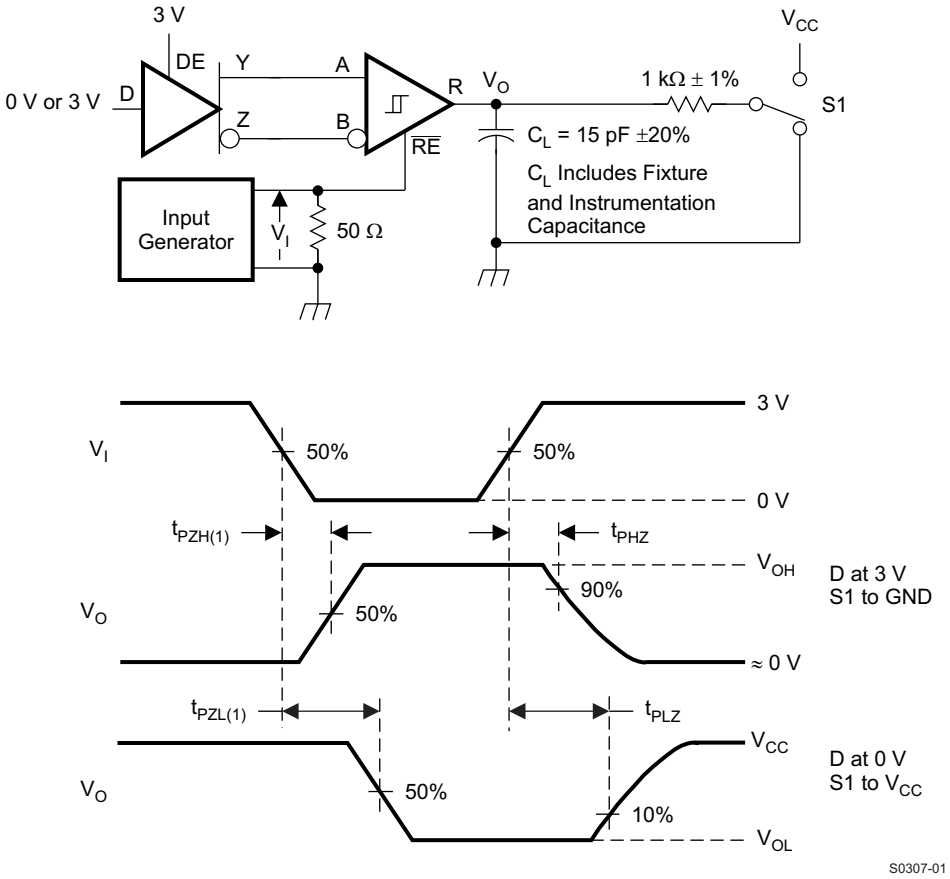

Figure 21. Measurement of Receiver Enable and Disable Times With Driver Enabled

Parameter Measurement Information (continued)

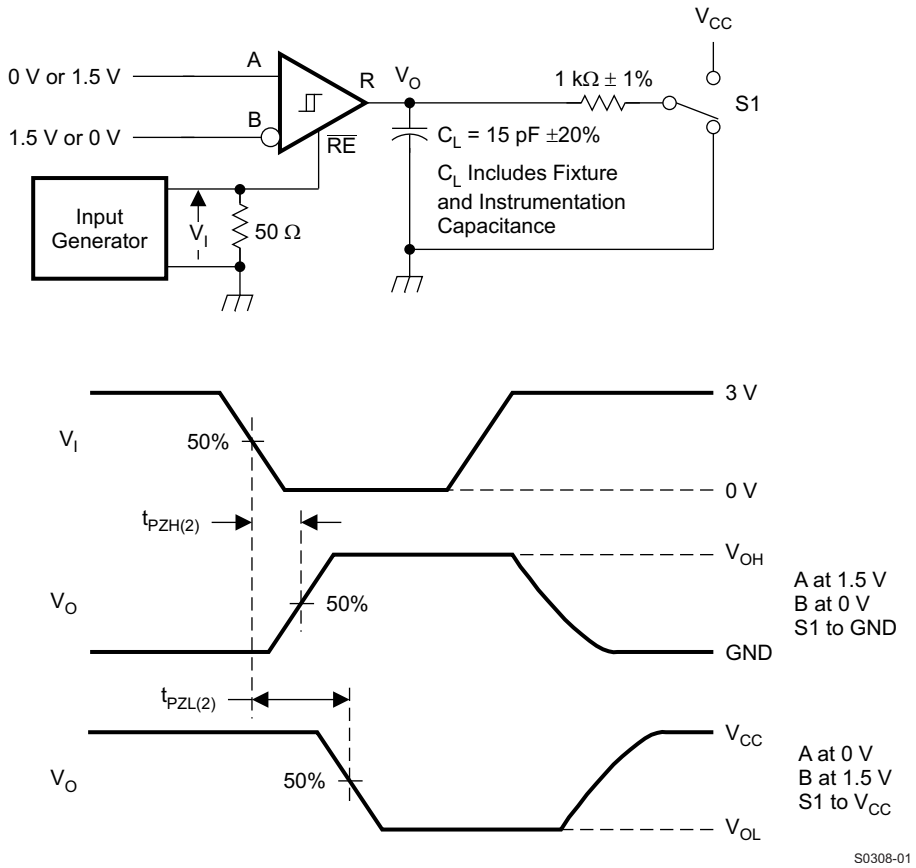

Figure 22. Measurement of Receiver Enable Times With Driver Disabled

Copyright © 2014–2019, Texas Instruments Incorporated

9 Detailed Description

9.1 Overview

The SN65HVD1470, SN65HVD1471, SN65HVD1473, SN65HVD1474, SN65HVD1476, and SN65HVD1477 devices are low-power, full-duplex RS-485 transceivers available in three speed grades suitable for data transmission up to 400 kbps, 20 Mbps, and 50 Mbps.

The SN65HVD1471, SN65HVD1474, and SN65HVD1477 are fully enabled with no external enabling pins. The SN65HVD1470, SN65HVD1473, and SN65HVD1476 have active-high driver enables and active-low receiver enables. A standby current of less than 5 µA can be achieved by disabling both driver and receiver.

9.2 Functional Block Diagram

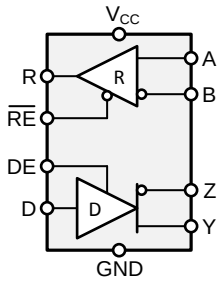

Figure 23. Block Diagram SN65HVD1470, SN65HVD1473, and SN65HVD1476

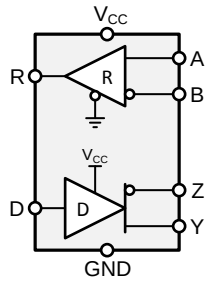

Figure 24. Block Diagram SN65HVD1471, SN65HVD1474, and SN65HVD1477

9.3 Feature Description

Internal ESD protection circuits protect the transceiver against Electrostatic Discharges (ESD) according to IEC61000-4-2 of up to ±16 kV, and against electrical fast transients (EFT) according to IEC61000-4-4 of up to ±4 kV.

The SN65HVD147x full-duplex family provides internal biasing of the receiver input thresholds in combination with large input-threshold hysteresis. At a positive input threshold of V_{IT+} = –20 mV and an input hysteresis of V_{hys} = 40 mV, the receiver output remains logic high under a bus-idle or bus-short condition even in the presence of 120 mV_{PP} differential noise without the need for external failsafe biasing resistors.

Device operation is specified over a wide temperature range from –40°C to 125°C.

9.4 Device Functional Modes

For the SN65HVD1470, SN65HVD1473, and SN65HVD1476, when the driver enable pin, DE, is logic high, the differential outputs Y and Z follow the logic states at data input D. A logic high at D causes Y to turn high and Z to turn low. In this case the differential output voltage defined as $V_{OD} = V_{(Y)} – V_{(Z)}$ is positive. When D is low, the output states reverse, Z turns high, Y becomes low, and V_{OD} is negative.

When DE is low, both outputs turn high-impedance. In this condition the logic state at D is irrelevant. The DE pin has an internal pulldown resistor to ground, thus when left open the driver is disabled (high-impedance) by default. The D pin has an internal pullup resistor to V_{CC}, thus, when left open while the driver is enabled, output Y turns high and Z turns low.

Table 1. Driver Function Table SN65HVD1470, SN65HVD1473, SN65HVD1476

INPUT	ENABLE	OUTPUTS		FUNCTION
D	DE	Y	Z	
H	H	H	L	Actively drives the bus high
L	H	L	H	Actively drives the bus low
X	L	Z	Z	Driver disabled
X	OPEN	Z	Z	Driver disabled by default
OPEN	H	H	L	Actively drives the bus high by default

Copyright © 2014–2019, Texas Instruments Incorporated

When the receiver enable pin, $\overline{RE}$, is logic low, the receiver is enabled. When the differential input voltage defined as $V_{ID} = V_{(A)} – V_{(B)}$ is positive and higher than the positive input threshold, V_{IT+}, the receiver output, R, turns high. When V_{ID} is negative and less than the negative and lower than the negative input threshold, $V_{IT–}$, the receiver output, R, turns low. If V_{ID} is between V_{IT+} and $V_{IT–}$ the output is indeterminate.

When $\overline{RE}$ is logic high or left open, the receiver output is high-impedance and the magnitude and polarity of VID are irrelevant. Internal biasing of the receiver inputs causes the output to go failsafe-high when the transceiver is disconnected from the bus (open-circuit), the bus lines are shorted (short-circuit), or the bus is not actively driven (idle bus).

Table 2. Receiver Function Table SN65HVD1470, SN65HVD1473, SN65HVD1476

DIFFERENTIAL INPUT	ENABLE	OUTPUT	FUNCTION
$V_{ID} = V_{(A)} – V_{(B)}$	$\overline{RE}$	R	
$V_{IT+} < V_{ID}$	L	H	Receives valid bus High
$V_{IT–} < V_{ID} < V_{IT+}$	L	?	Indeterminate bus state
$V_{ID} < V_{IT–}$	L	L	Receives valid bus Low
X	H	Z	Receiver disabled
X	OPEN	Z	Receiver disabled by default
Open-circuit bus	L	H	Fail-safe high output
Short-circuit bus	L	H	Fail-safe high output
Idle (terminated) bus	L	H	Fail-safe high output

For the SN65HVD1471, HVD1474, and HVD1477, the driver and receiver are fully enabled, thus the differential outputs Y and Z follow the logic states at data input D at all times. A logic high at D causes Y to turn high and Z to turn low. In this case the differential output voltage defined as $V_{OD} = V_{(Y)} – V_{(Z)}$ is positive. When D is low, the output states reverse, Z turns high, Y becomes low, and V_{OD} is negative. The D pin has an internal pullup resistor to V_{CC}, thus, when left open while the driver is enabled, output Y turns high and Z turns low.

Table 3. Driver Function Table SN65HVD1471, SN65HVD1474, SN65HVD1477

INPUT	OUTPUTS		FUNCTION
D	Y	Z	
H	H	L	Actively drives the bus High
L	L	H	Actively drives the bus Low
OPEN	H	L	Actively drives the bus High by default

When the differential input voltage defined as $V_{ID} = V_{(A)} – V_{(B)}$ is positive and higher than the positive input threshold, V_{IT+}, the receiver output, R, turns high. When V_{ID} is negative and less than the negative input threshold, $V_{IT–}$, the receiver output, R, turns low. If V_{ID} is between V_{IT+} and $V_{IT–}$ the output is indeterminate. Internal biasing of the receiver inputs causes the output to go failsafe-high when the transceiver is disconnected from the bus (open-circuit), the bus lines are shorted (short-circuit), or the bus is not actively driven (idle bus).

Table 4. Receiver Function Table SN65HVD1471, SN65HVD1474, SN65HVD1477

DIFFERENTIAL INPUT	OUTPUT	FUNCTION
$V_{ID} = V_{(A)} – V_{(B)}$	R	
$V_{IT+} < V_{ID}$	H	Receives valid bus High
$V_{IT–} < V_{ID} < V_{IT+}$	?	Indeterminate bus state
$V_{ID} < V_{IT–}$	L	Receives valid bus Low
Open-circuit bus	H	Fail-safe high output
Short-circuit bus	H	Fail-safe high output
Idle (terminated) bus	H	Fail-safe high output

Copyright © 2014–2019, Texas Instruments Incorporated

9.4.1 Equivalent Circuits

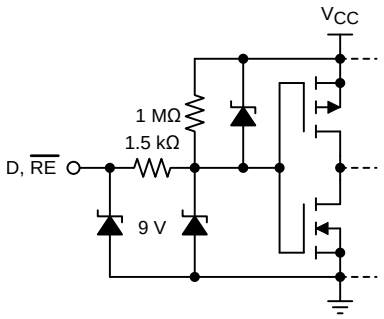

Figure 25. D and $\overline{RE}$ Inputs

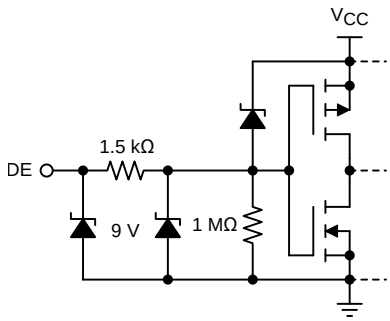

Figure 26. DE Input

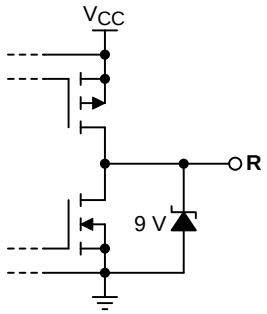

Figure 27. R Output

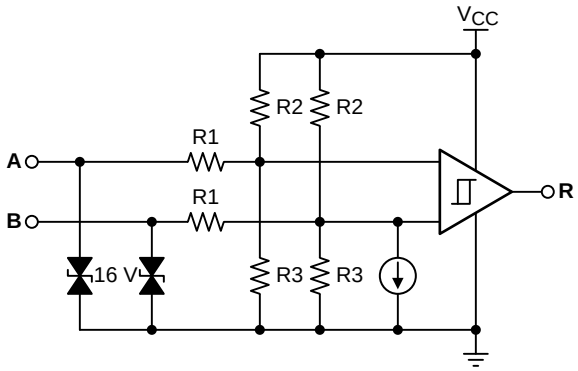

Figure 28. Receiver Inputs

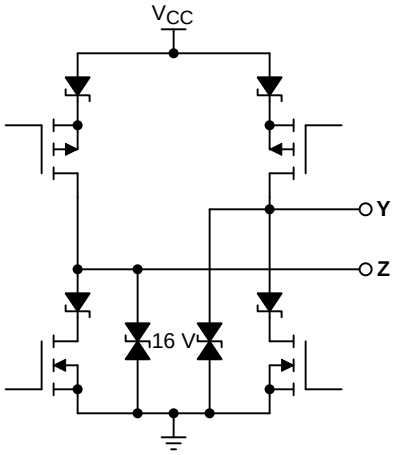

Figure 29. Driver Outputs

10 Application and Implementation

NOTE

Information in the following applications sections is not part of the TI component specification, and TI does not warrant its accuracy or completeness. TI's customers are responsible for determining suitability of components for their purposes. Customers should validate and test their design implementation to confirm system functionality.

10.1 Application Information

The SN65HVD147x family consists of full-duplex RS-485 transceivers commonly used for asynchronous data transmissions. Full-duplex implementation requires two signal pairs (four wires), and allows each node to transmit data on one pair while simultaneously receiving data on the other pair.

To eliminate line reflections, each cable end is terminated with a termination resistor, $R_{(T)}$, whose value matches the characteristic impedance, Z_0, of the cable. This method, known as parallel termination, allows for higher data rates over longer cable length.

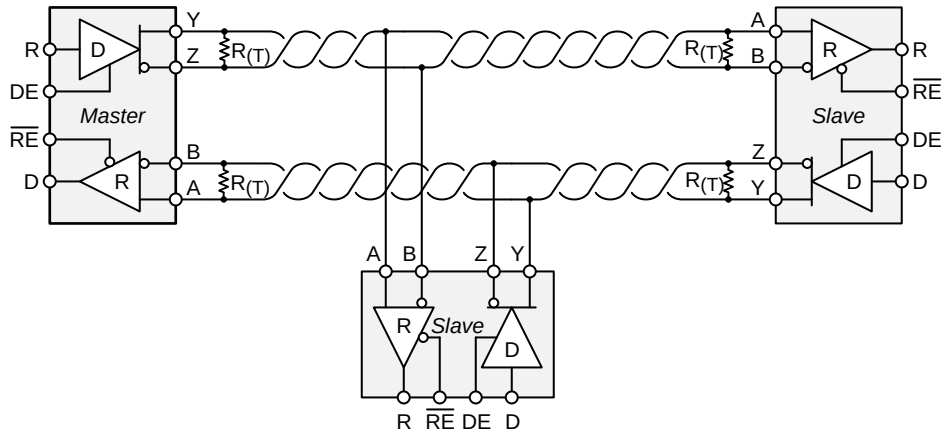

Figure 30. Typical RS-485 Network With SN65HVD147x Full-Duplex Transceivers

10.2 Typical Application

A full-duplex RS-485 network consists of multiple transceivers connecting in parallel to two bus cables. On one signal pair, a master driver transmits data to multiple slave receivers. The master driver and slave receivers may remain fully enabled at all times. On the other signal pair, multiple slave drivers transmit data to the master receiver. To avoid bus contention, the slave drivers must be intermittently enabled and disabled such that only one driver is enabled at any time, as in half-duplex communication. The master receiver may remain fully enabled at all times.

Because the driver may not be disabled, only one driver should be connected to the bus when using the SN65HVD1471, SN65HVD1474, or SN65HVD1477 device.

Figure 31. Full-Duplex Transceiver Configurations

Copyright © 2014–2019, Texas Instruments Incorporated

Typical Application (continued)

10.2.1 Design Requirements

RS-485 is a robust electrical standard suitable for long-distance networking that may be used in a wide range of applications with varying parameter requirements, such as distance, data rate, and number of nodes.

10.2.1.1 Data Rate and Bus Length

There is an inverse relationship between data rate and cable length, which means the higher the data rate, the short the cable length; and conversely, the lower the data rate, the longer the cable length. While most RS-485 systems use data rates between 10 kbps and 100 kbps, some applications require data rates up to 250 kbps at distances of 4000 ft and longer. Longer distances are possible by allowing for small signal jitter of up to 5 or 10%.

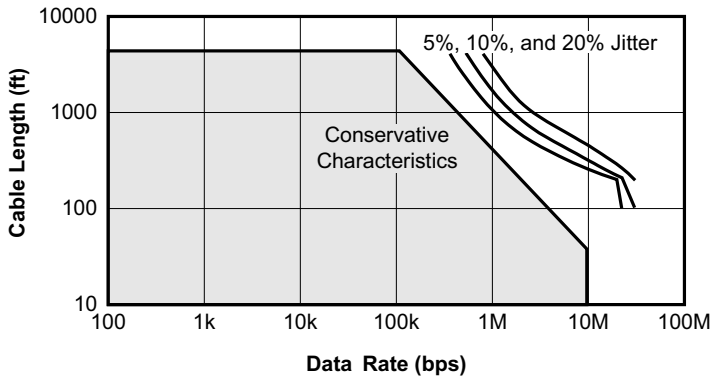

Figure 32. Cable Length vs Data Rate Characteristic

10.2.1.2 Stub Length

When connecting a node to the bus, the distance between the transceiver inputs and the cable trunk, known as the stub, should be as short as possible. Stubs present a non-terminated piece of bus line which can introduce reflections as the length of the stub increases. As a general guideline, the electrical length, or round-trip delay, of a stub should be less than one-tenth of the rise time of the driver, thus giving a maximum physical stub length as shown in Equation 1.

$$L_{(STUB)} \leq 0.1 \times t_r \times v \times c \quad (1)$$

where

- t_r is the 10/90 rise time of the driver
- v is the signal velocity of the cable or trace as a factor of c
- c is the speed of light (3×10^8 m/s)

Per Equation 1, Table 5 lists the maximum cable-stub lengths for the minimum-driver output rise-times of the SN65HVD147x full-duplex family of transceivers for a signal velocity of 78%.

Table 5. Maximum Stub Length

DEVICE	MINIMUM DRIVER OUTPUT RISE TIME (ns)	MAXIMUM STUB LENGTH	
		(m)	(ft)
SN65HVD1470	100	2.34	7.7
SN65HVD1471	100	2.34	7.7
SN65HVD1473	4	0.1	0.3
SN65HVD1474	4	0.1	0.3
SN65HVD1476	2	0.05	0.15
SN65HVD1477	2	0.05	0.15

Copyright © 2014–2019, Texas Instruments Incorporated

10.2.1.3 Bus Loading

The RS-485 standard specifies that a compliant driver must be able to driver 32 unit loads (UL), where 1 unit load represents a load impedance of approximately 12 kΩ. Because the SN65HVD147x family consists of 1/8 UL transceivers, connecting up to 256 receivers to the bus is possible.

10.2.1.4 Receiver Failsafe

The differential receivers of the SN65HVD147x family are *failsafe* to invalid bus states caused by the following:

- Open bus conditions, such as a disconnected connector
- Shorted bus conditions, such as cable damage shorting the twisted-pair together
- Idle bus conditions that occur when no driver on the bus is actively driving

In any of these cases, the differential receiver will output a failsafe logic high state so that the output of the receiver is not indeterminate.

Receiver failsafe is accomplished by offsetting the receiver thresholds such that the *input indeterminate* range does not include zero volts differential. In order to comply with the RS-422 and RS-485 standards, the receiver output must output a high when the differential input V_{ID} is more positive than 200 mV, and must output a Low when V_{ID} is more negative than –200 mV. The receiver parameters which determine the failsafe performance are V_{IT+}, V_{IT-}, and V_{hys} (the separation between V_{IT+} and V_{IT-}). As shown in the Electrical Characteristics table, differential signals more negative than –200 mV will always cause a low receiver output, and differential signals more positive than 200 mV will always cause a high receiver output.

When the differential input signal is close to zero, it is still above the V_{IT+} threshold, and the receiver output will be High. Only when the differential input is more than V_{hys} below V_{IT+} will the receiver output transition to a Low state. Therefore, the noise immunity of the receiver inputs during a bus fault conditions includes the receiver hysteresis value, V_{hys}, as well as the value of V_{IT+}.

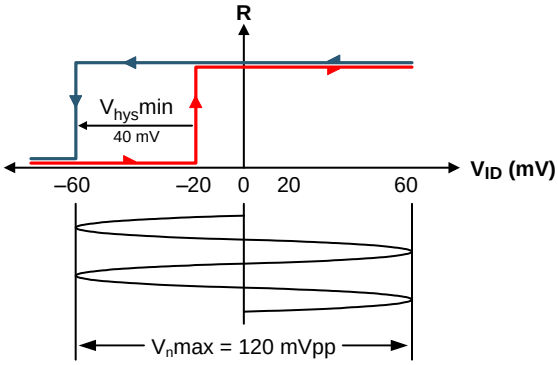

Figure 33. SN65HVD147x Noise Immunity Under Bus Fault Conditions

10.2.1.5 Transient Protection

The bus pins of the SN65HVD147x full-duplex transceiver family include on-chip ESD protection against ±30-kV HBM and ±16-kV IEC 61000-4-2 contact discharge. The International Electrotechnical Commission (IEC) ESD test is far more severe than the HBM ESD test. The 50% higher charge capacitance, $C_{(S)}$, and 78% lower discharge resistance, $R_{(D)}$, of the IEC model produce significantly higher discharge currents than the HBM model.

As stated in the IEC 61000-4-2 standard, contact discharge is the preferred transient protection test method. Although IEC air-gap testing is less repeatable than contact testing, air discharge protection levels are inferred from contact discharge test results.

Copyright © 2014–2019, Texas Instruments Incorporated

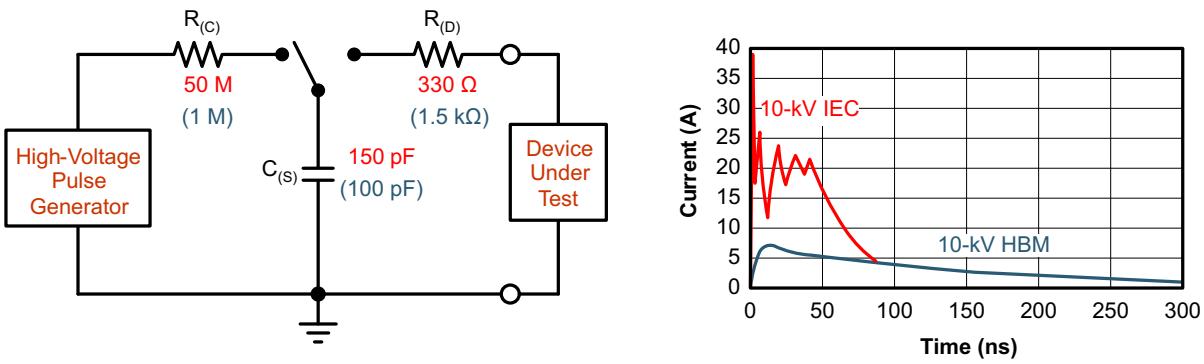

Figure 34. HBM and IEC ESD Models and Currents in Comparison (HBM Values in Parenthesis)

The on-chip implementation of IEC ESD protection significantly increases the robustness of equipment. Common discharge events occur because of human contact with connectors and cables. Designers may choose to implement protection against longer duration transients, typically referred to as surge transients.

EFTs are generally caused by relay-contact bounce or the interruption of inductive loads. Surge transients often result from lightning strikes (direct strike or an indirect strike which induce voltages and currents), or the switching of power systems, including load changes and short circuit switching. These transients are often encountered in industrial environments, such as factory automation and power-grid systems.

Figure 35 compares the pulse-power of the EFT and surge transients with the power caused by an IEC ESD transient. The left hand diagram shows the relative pulse-power for a 0.5kV surge transient and 4-kV EFT transient, both of which dwarf the 10-kV ESD transient visible in the lower-left corner. 500-V surge transients are representative of events that may occur in factory environments in industrial and process automations.

The right hand diagram shows the pulse-power of a 6-kV surge transient, relative to the same 0.5-kV surge transient. 6-kV surge transients are most likely to occur in power generation and power-grid systems.

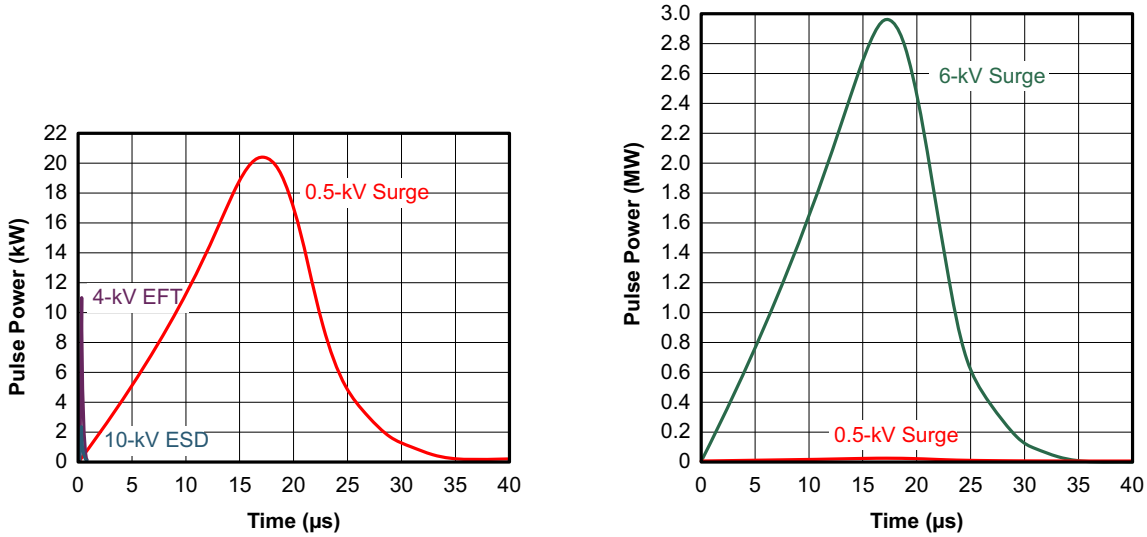

Figure 35. Power Comparison of ESD, EFT, and Surge Transients

In the case of surge transients, high-energy content is characterized by long pulse duration and slow decaying pulse power. The electrical energy of a transient that is dumped into the internal protection cells of a transceiver is converted into thermal energy, which heats and destroys the protection cells, thus destroying the transceiver. Figure 36 shows the large differences in transient energies for single ESD, EFT, surge transients, and an EFT pulse train that is commonly applied during compliance testing.

Copyright © 2014–2019, Texas Instruments Incorporated

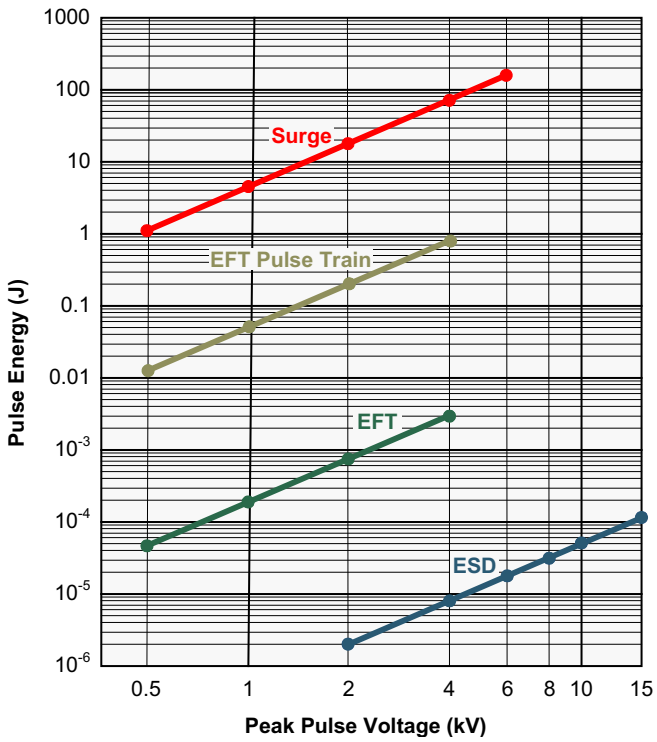

Figure 36. Comparison of Transient Energies

10.2.2 Detailed Design Procedure

In order to protect bus nodes against high-energy transients, the implementation of external transient protection devices is therefore necessary. Figure 37 shows a protection circuit against 16-kV ESD, 4-kV EFT, and 1-kV surge transients.

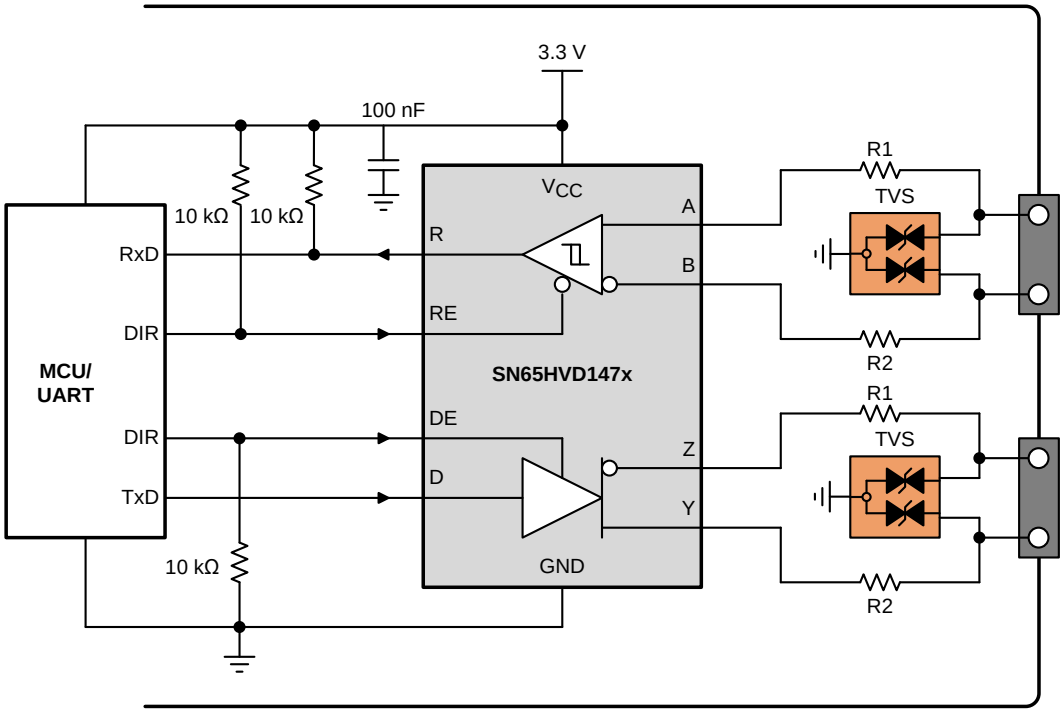

Figure 37. Transient Protection Against ESD, EFT, and Surge transients

Copyright © 2014–2019, Texas Instruments Incorporated

Table 6. Bill of Materials

DEVICE	FUNCTION	ORDER NUMBER	MANUFACTURER
XCVR	3.3-V, full-duplex RS-485 transceiver	SN65HVD147xD	TI
R1	10-Ω, pulse-proof thick-film resistor	CRCW0603010RJNEAHP	Vishay
R2			
TVS	Bidirectional 400-W transient suppressor	CDSOT23-SM712	Bourns

10.2.3 Application Curves

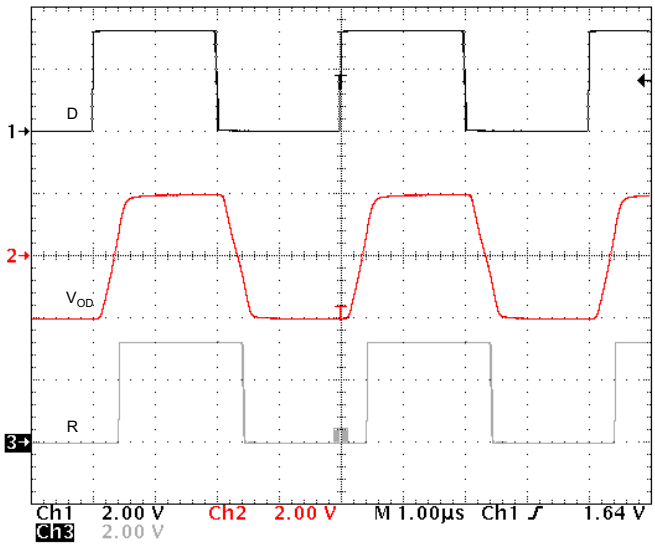

R_L = 60 Ω

Figure 38. SN65HVD1470 and SN65HVD1471, 500 kbps

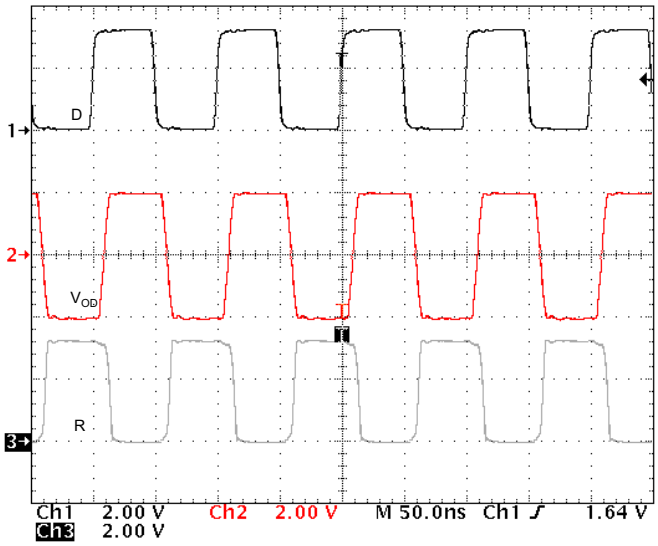

R_L = 60 Ω

Figure 39. SN65HVD1473 and SN65HVD1474, 20 Mbps

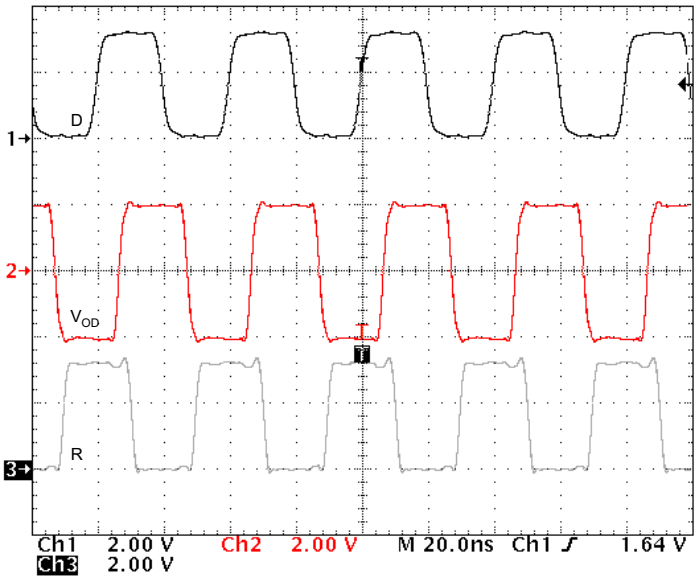

R_L = 60 Ω

Figure 40. SN65HVD1476 and SN65HVD1477, 50 Mbps

11 Power Supply Recommendations

To ensure reliable operation at all data rates and supply voltages, each supply should be buffered with a 100-nF ceramic capacitor located as close to the supply pins as possible. The TPS76333 is a linear voltage regulator suitable for the 3.3-V supply.

12 Layout

12.1 Layout Guidelines

On-chip IEC-ESD protection is good for laboratory and portable equipment but never sufficient for EFT and surge transients occurring in industrial environments. Therefore robust and reliable bus node design requires the use of external transient protection devices.

Because ESD and EFT transients have a wide frequency bandwidth from approximately 3-MHz to 3-GHz, high-frequency layout techniques must be applied during PCB design.

For successful PCB design, begin with the design of the protection circuit (see Figure 41).

1. Place the protection circuitry close to the bus connector to prevent noise transients from penetrating your board.
2. Use V_{CC} and ground planes to provide low-inductance. Note that high-frequency currents follow the path of least inductance and not the path of least impedance.
3. Design the protection components into the direction of the signal path. Do not force the transient currents to divert from the signal path to reach the protection device.
4. Apply 100-nF to 220-nF bypass capacitors as close as possible to the V_{CC}-pins of transceiver, UART, controller ICs on the board (see Figure 41).
5. Use at least two vias for V_{CC} and ground connections of bypass capacitors and protection devices to minimize effective via-inductance (see Figure 41).
6. Use 1-kΩ to 10-kΩ pullup and pulldown resistors for enable lines to limit noise currents in theses lines during transient events (see Figure 41).
7. Insert pulse-proof resistors into the A and B bus lines if the TVS clamping voltage is higher than the specified maximum voltage of the transceiver bus pins. These resistors limit the residual clamping current into the transceiver and prevent it from latching up (see Figure 41).
8. While pure TVS protection is sufficient for surge transients up to 1 kV, higher transients require metal-oxide varistors (MOVs) which reduce the transients to a few hundred volts of clamping voltage, and transient blocking units (TBUs) that limit transient current to less than 1 mA.

版权 © 2014–2019, Texas Instruments Incorporated

12.2 Layout Example

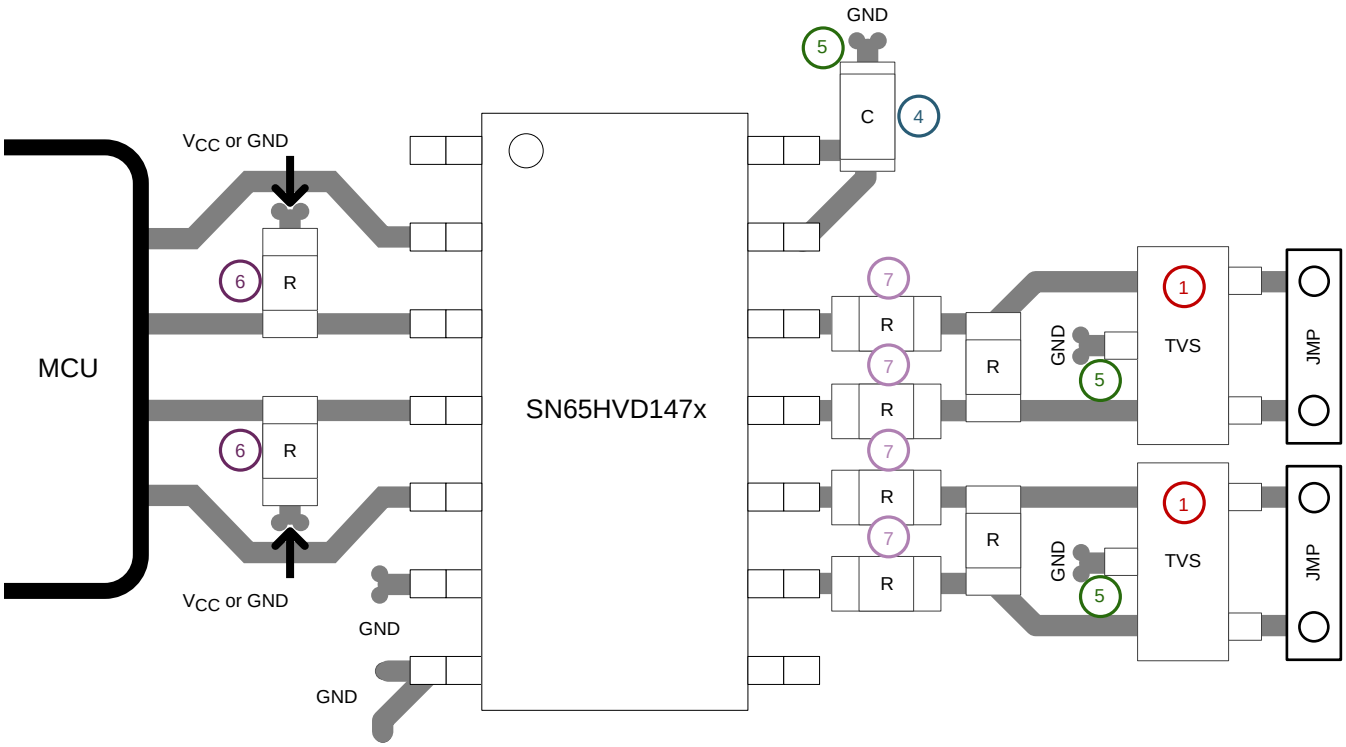

Figure 41. SN65HVD147x Layout Example

13 器件和文档支持

13.1 器件支持

13.1.1 第三方产品免责声明

TI 发布的与第三方产品或服务有关的信息，不能构成与此类产品或服务或保修的适用性有关的认可，不能构成此类产品或服务单独或与任何 TI 产品或服务一起的表示或认可。

13.2 相关链接

下表列出了快速访问链接。类别包括技术文档、支持与社区资源、工具和软件，以及申请样片或购买产品的快速链接。

表 **7.** 相关链接

器件	产品文件夹	样片与购买	技术文档	工具与软件	支持和社区
SN65HVD1470	请单击此处	请单击此处	请单击此处	请单击此处	请单击此处
SN65HVD1471	请单击此处	请单击此处	请单击此处	请单击此处	请单击此处
SN65HVD1473	请单击此处	请单击此处	请单击此处	请单击此处	请单击此处
SN65HVD1474	请单击此处	请单击此处	请单击此处	请单击此处	请单击此处
SN65HVD1476	请单击此处	请单击此处	请单击此处	请单击此处	请单击此处
SN65HVD1477	请单击此处	请单击此处	请单击此处	请单击此处	请单击此处

13.3 接收文档更新通知

要接收文档更新通知，请导航至 TI.com.cn 上的器件产品文件夹。单击右上角的*通知我* 进行注册，即可每周接收产品信息更改摘要。有关更改的详细信息，请查看任何已修订文档中包含的修订历史记录。

13.4 社区资源

下列链接提供到 TI 社区资源的连接。链接的内容由各个分销商“按照原样”提供。这些内容并不构成 TI 技术规范，并且不一定反映 TI 的观点；请参阅 TI 的 《使用条款》。

TI E2E™ Online Community ***TI's Engineer-to-Engineer (E2E) Community.*** Created to foster collaboration among engineers. At e2e.ti.com, you can ask questions, share knowledge, explore ideas and help solve problems with fellow engineers.

Design Support ***TI's Design Support*** Quickly find helpful E2E forums along with design support tools and contact information for technical support.

13.5 商标

E2E is a trademark of Texas Instruments.
All other trademarks are the property of their respective owners.

13.6 静电放电警告

ESD 可能会损坏该集成电路。德州仪器 (TI) 建议通过适当的预防措施处理所有集成电路。如果不遵守正确的处理措施和安装程序，可能会损坏集成电路。

ESD 的损坏小至导致微小的性能降级，大至整个器件故障。 精密的集成电路可能更容易受到损坏，这是因为非常细微的参数更改都可能会导致器件与其发布的规格不相符。

13.7 术语表

SLYZ022 — *TI 术语表*。

这份术语表列出并解释术语、缩写和定义。

14 机械、封装和可订购信息

以下页面包含机械、封装和可订购信息。这些信息是指定器件的最新可用数据。数据如有变更，恕不另行通知，且不会对此文档进行修订。如需获取此数据表的浏览器版本，请查阅左侧的导航栏。

版权 © 2014–2019, Texas Instruments Incorporated

PACKAGING INFORMATION

Orderable Device	Status (1)	Package Type	Package Drawing	Pins	Package Qty	Eco Plan (2)	Lead finish/ Ball material (6)	MSL Peak Temp (3)	Op Temp (°C)	Device Marking (4/5)	Samples
SN65HVD1470D	ACTIVE	SOIC	D	14	50	RoHS & Green	NIPDAU	Level-2-260C-1 YEAR	-40 to 125	HVD1470	Samples
SN65HVD1470DGS	ACTIVE	VSSOP	DGS	10	80	RoHS & Green	NIPDAUAG	Level-1-260C-UNLIM	-40 to 125	1470	Samples
SN65HVD1470DGSR	ACTIVE	VSSOP	DGS	10	2500	RoHS & Green	NIPDAUAG	Level-1-260C-UNLIM	-40 to 125	1470	Samples
SN65HVD1470DR	ACTIVE	SOIC	D	14	2500	RoHS & Green	NIPDAU	Level-2-260C-1 YEAR	-40 to 125	HVD1470	Samples
SN65HVD1471D	ACTIVE	SOIC	D	8	75	RoHS & Green	NIPDAU	Level-1-260C-UNLIM	-40 to 125	VD1471	Samples
SN65HVD1471DGK	ACTIVE	VSSOP	DGK	8	80	RoHS & Green	NIPDAUAG	Level-1-260C-UNLIM	-40 to 125	1471	Samples
SN65HVD1471DGKR	ACTIVE	VSSOP	DGK	8	2500	RoHS & Green	NIPDAUAG	Level-1-260C-UNLIM	-40 to 125	1471	Samples
SN65HVD1471DR	ACTIVE	SOIC	D	8	2500	RoHS & Green	NIPDAU	Level-1-260C-UNLIM	-40 to 125	VD1471	Samples
SN65HVD1473D	ACTIVE	SOIC	D	14	50	RoHS & Green	NIPDAU	Level-2-260C-1 YEAR	-40 to 125	HVD1473	Samples
SN65HVD1473DGS	ACTIVE	VSSOP	DGS	10	80	RoHS & Green	NIPDAUAG	Level-1-260C-UNLIM	-40 to 125	1473	Samples
SN65HVD1473DGSR	ACTIVE	VSSOP	DGS	10	2500	RoHS & Green	NIPDAUAG	Level-1-260C-UNLIM	-40 to 125	1473	Samples
SN65HVD1473DR	ACTIVE	SOIC	D	14	2500	RoHS & Green	NIPDAU	Level-2-260C-1 YEAR	-40 to 125	HVD1473	Samples
SN65HVD1474D	ACTIVE	SOIC	D	8	75	RoHS & Green	NIPDAU	Level-1-260C-UNLIM	-40 to 125	VD1474	Samples
SN65HVD1474DGK	ACTIVE	VSSOP	DGK	8	80	RoHS & Green	NIPDAUAG	Level-1-260C-UNLIM	-40 to 125	1474	Samples
SN65HVD1474DGKR	ACTIVE	VSSOP	DGK	8	2500	RoHS & Green	NIPDAUAG	Level-1-260C-UNLIM	-40 to 125	1474	Samples
SN65HVD1474DR	ACTIVE	SOIC	D	8	2500	RoHS & Green	NIPDAU	Level-1-260C-UNLIM	-40 to 125	VD1474	Samples
SN65HVD1476D	ACTIVE	SOIC	D	14	50	RoHS & Green	NIPDAU	Level-2-260C-1 YEAR	-40 to 125	HVD1476	Samples
SN65HVD1476DGS	ACTIVE	VSSOP	DGS	10	80	RoHS & Green	NIPDAUAG	Level-1-260C-UNLIM	-40 to 125	1476	Samples
SN65HVD1476DGSR	ACTIVE	VSSOP	DGS	10	2500	RoHS & Green	NIPDAUAG	Level-1-260C-UNLIM	-40 to 125	1476	Samples
SN65HVD1476DR	ACTIVE	SOIC	D	14	2500	RoHS & Green	NIPDAU	Level-2-260C-1 YEAR	-40 to 125	HVD1476	Samples

Orderable Device	Status (1)	Package Type	Package Drawing	Pins	Package Qty	Eco Plan (2)	Lead finish/ Ball material (6)	MSL Peak Temp (3)	Op Temp (°C)	Device Marking (4/5)	Samples
SN65HVD1477D	ACTIVE	SOIC	D	8	75	RoHS & Green	NIPDAU	Level-1-260C-UNLIM	-40 to 125	VD1477	Samples
SN65HVD1477DGK	ACTIVE	VSSOP	DGK	8	80	RoHS & Green	NIPDAUAG	Level-1-260C-UNLIM	-40 to 125	1477	Samples
SN65HVD1477DGKR	ACTIVE	VSSOP	DGK	8	2500	RoHS & Green	NIPDAUAG	Level-1-260C-UNLIM	-40 to 125	1477	Samples
SN65HVD1477DR	ACTIVE	SOIC	D	8	2500	RoHS & Green	NIPDAU	Level-1-260C-UNLIM	-40 to 125	VD1477	Samples

(1) The marketing status values are defined as follows:
ACTIVE: Product device recommended for new designs.
LIFEBUY: TI has announced that the device will be discontinued, and a lifetime-buy period is in effect.
NRND: Not recommended for new designs. Device is in production to support existing customers, but TI does not recommend using this part in a new design.
PREVIEW: Device has been announced but is not in production. Samples may or may not be available.
OBSOLETE: TI has discontinued the production of the device.

(2) **RoHS:** TI defines "RoHS" to mean semiconductor products that are compliant with the current EU RoHS requirements for all 10 RoHS substances, including the requirement that RoHS substance do not exceed 0.1% by weight in homogeneous materials. Where designed to be soldered at high temperatures, "RoHS" products are suitable for use in specified lead-free processes. TI may reference these types of products as "Pb-Free".
RoHS Exempt: TI defines "RoHS Exempt" to mean products that contain lead but are compliant with EU RoHS pursuant to a specific EU RoHS exemption.
Green: TI defines "Green" to mean the content of Chlorine (Cl) and Bromine (Br) based flame retardants meet JS709B low halogen requirements of <=1000ppm threshold. Antimony trioxide based flame retardants must also meet the <=1000ppm threshold requirement.

(3) MSL, Peak Temp. - The Moisture Sensitivity Level rating according to the JEDEC industry standard classifications, and peak solder temperature.

(4) There may be additional marking, which relates to the logo, the lot trace code information, or the environmental category on the device.

(5) Multiple Device Markings will be inside parentheses. Only one Device Marking contained in parentheses and separated by a "~" will appear on a device. If a line is indented then it is a continuation of the previous line and the two combined represent the entire Device Marking for that device.

(6) Lead finish/Ball material - Orderable Devices may have multiple material finish options. Finish options are separated by a vertical ruled line. Lead finish/Ball material values may wrap to two lines if the finish value exceeds the maximum column width.

Important Information and Disclaimer: The information provided on this page represents TI's knowledge and belief as of the date that it is provided. TI bases its knowledge and belief on information provided by third parties, and makes no representation or warranty as to the accuracy of such information. Efforts are underway to better integrate information from third parties. TI has taken and continues to take reasonable steps to provide representative and accurate information but may not have conducted destructive testing or chemical analysis on incoming materials and chemicals. TI and TI suppliers consider certain information to be proprietary, and thus CAS numbers and other limited information may not be available for release.

In no event shall TI's liability arising out of such information exceed the total purchase price of the TI part(s) at issue in this document sold by TI to Customer on an annual basis.

TAPE AND REEL INFORMATION

REEL DIMENSIONS

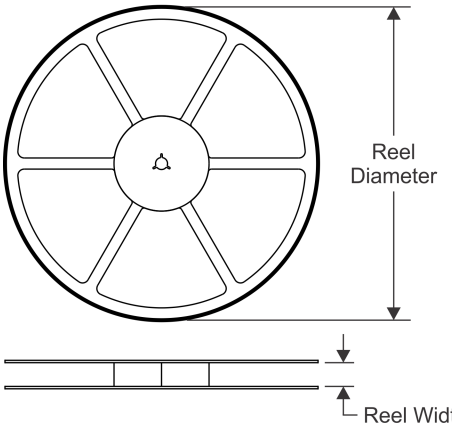

TAPE DIMENSIONS

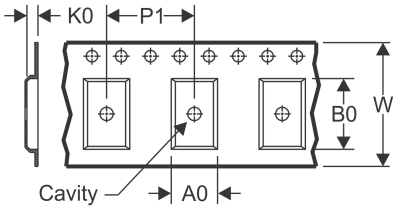

A0	Dimension designed to accommodate the component width
B0	Dimension designed to accommodate the component length
K0	Dimension designed to accommodate the component thickness
W	Overall width of the carrier tape
P1	Pitch between successive cavity centers

QUADRANT ASSIGNMENTS FOR PIN 1 ORIENTATION IN TAPE

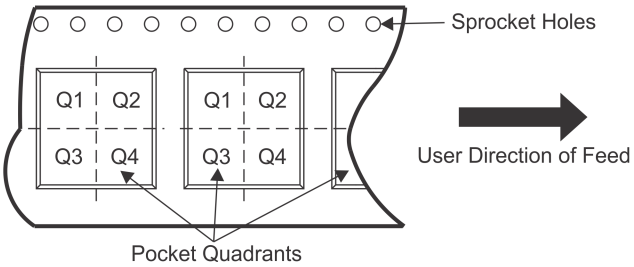

*All dimensions are nominal

Device	Package Type	Package Drawing	Pins	SPQ	Reel Diameter (mm)	Reel Width W1 (mm)	A0 (mm)	B0 (mm)	K0 (mm)	P1 (mm)	W (mm)	Pin1 Quadrant
SN65HVD1470DGSR	VSSOP	DGS	10	2500	330.0	12.4	5.3	3.4	1.4	8.0	12.0	Q1
SN65HVD1470DR	SOIC	D	14	2500	330.0	16.4	6.5	9.0	2.1	8.0	16.0	Q1
SN65HVD1471DGKR	VSSOP	DGK	8	2500	330.0	12.4	5.3	3.4	1.4	8.0	12.0	Q1
SN65HVD1471DR	SOIC	D	8	2500	330.0	12.5	6.4	5.2	2.1	8.0	12.0	Q1
SN65HVD1473DGSR	VSSOP	DGS	10	2500	330.0	12.4	5.3	3.4	1.4	8.0	12.0	Q1
SN65HVD1474DGKR	VSSOP	DGK	8	2500	330.0	12.4	5.3	3.4	1.4	8.0	12.0	Q1
SN65HVD1474DR	SOIC	D	8	2500	330.0	12.4	6.4	5.2	2.1	8.0	12.0	Q1
SN65HVD1476DGSR	VSSOP	DGS	10	2500	330.0	12.4	5.3	3.4	1.4	8.0	12.0	Q1
SN65HVD1476DR	SOIC	D	14	2500	330.0	16.4	6.5	9.0	2.1	8.0	16.0	Q1
SN65HVD1477DGKR	VSSOP	DGK	8	2500	330.0	12.4	5.3	3.4	1.4	8.0	12.0	Q1
SN65HVD1477DR	SOIC	D	8	2500	330.0	12.5	6.4	5.2	2.1	8.0	12.0	Q1

TAPE AND REEL BOX DIMENSIONS

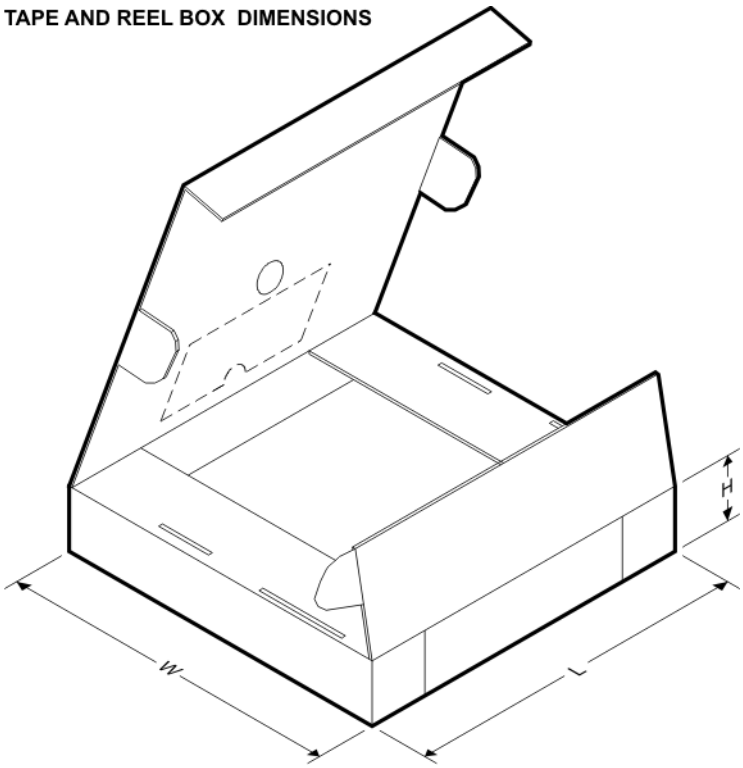

*All dimensions are nominal

Device	Package Type	Package Drawing	Pins	SPQ	Length (mm)	Width (mm)	Height (mm)
SN65HVD1470DGSR	VSSOP	DGS	10	2500	364.0	364.0	27.0
SN65HVD1470DR	SOIC	D	14	2500	340.5	336.1	32.0
SN65HVD1471DGKR	VSSOP	DGK	8	2500	364.0	364.0	27.0
SN65HVD1471DR	SOIC	D	8	2500	340.5	336.1	25.0
SN65HVD1473DGSR	VSSOP	DGS	10	2500	364.0	364.0	27.0
SN65HVD1474DGKR	VSSOP	DGK	8	2500	364.0	364.0	27.0
SN65HVD1474DR	SOIC	D	8	2500	340.5	336.1	25.0
SN65HVD1476DGSR	VSSOP	DGS	10	2500	364.0	364.0	27.0
SN65HVD1476DR	SOIC	D	14	2500	340.5	336.1	32.0
SN65HVD1477DGKR	VSSOP	DGK	8	2500	364.0	364.0	27.0
SN65HVD1477DR	SOIC	D	8	2500	340.5	336.1	25.0

TUBE

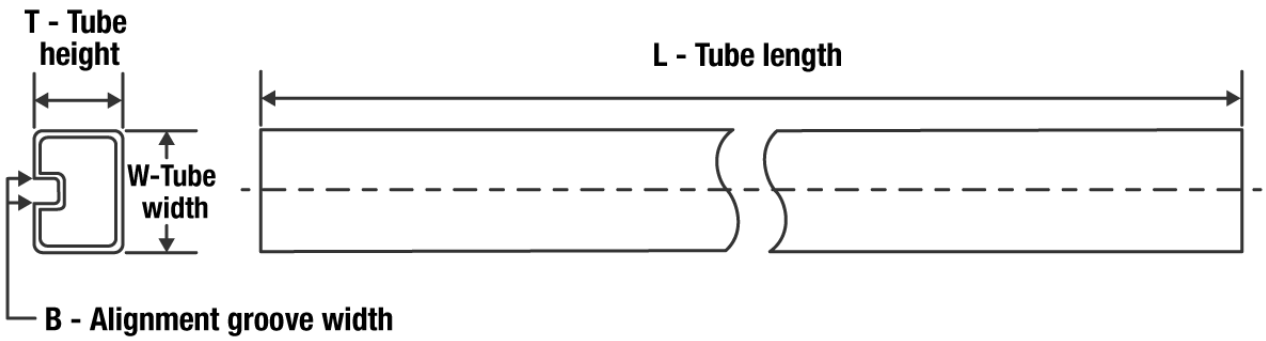

*All dimensions are nominal

Device	Package Name	Package Type	Pins	SPQ	L (mm)	W (mm)	T (µm)	B (mm)
SN65HVD1470D	D	SOIC	14	50	507	7.85	3750	2.24
SN65HVD1470DGS	DGS	VSSOP	10	80	330	6.55	500	2.88
SN65HVD1471D	D	SOIC	8	75	507	8	3940	4.32
SN65HVD1471DGK	DGK	VSSOP	8	80	330	6.55	500	2.88
SN65HVD1473D	D	SOIC	14	50	507	7.85	3750	2.24
SN65HVD1473DGS	DGS	VSSOP	10	80	330	6.55	500	2.88
SN65HVD1474D	D	SOIC	8	75	507	8	3940	4.32
SN65HVD1474DGK	DGK	VSSOP	8	80	330	6.55	500	2.88
SN65HVD1476D	D	SOIC	14	50	507	7.85	3750	2.24
SN65HVD1476DGS	DGS	VSSOP	10	80	330	6.55	500	2.88
SN65HVD1477D	D	SOIC	8	75	507	8	3940	4.32
SN65HVD1477DGK	DGK	VSSOP	8	80	330	6.55	500	2.88

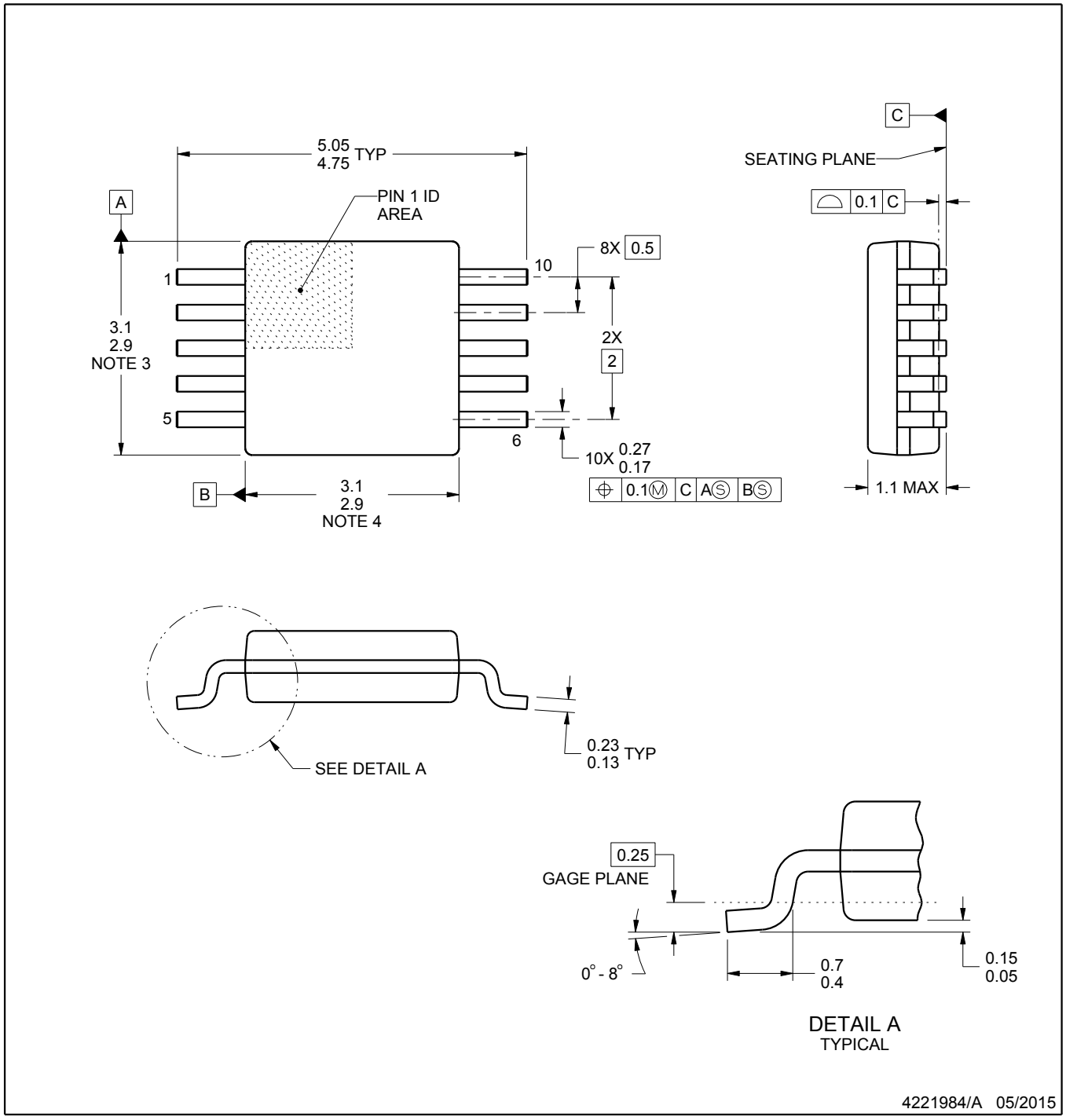

NOTES:

1. All linear dimensions are in millimeters. Any dimensions in parenthesis are for reference only. Dimensioning and tolerancing per ASME Y14.5M.
2. This drawing is subject to change without notice.
3. This dimension does not include mold flash, protrusions, or gate burrs. Mold flash, protrusions, or gate burrs shall not exceed 0.15 mm per side.
4. This dimension does not include interlead flash. Interlead flash shall not exceed 0.25 mm per side.
5. Reference JEDEC registration MO-187, variation BA.

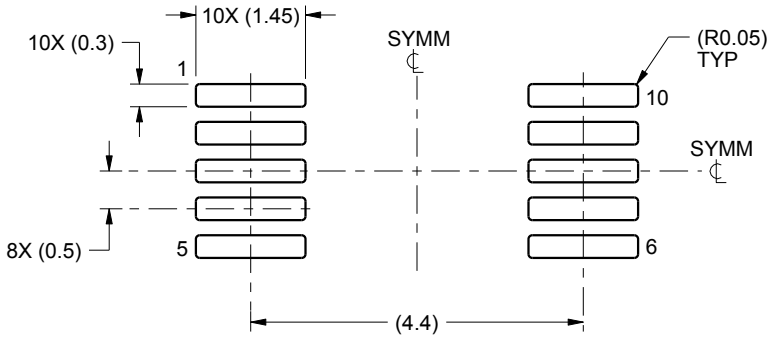

LAND PATTERN EXAMPLE
SCALE:10X

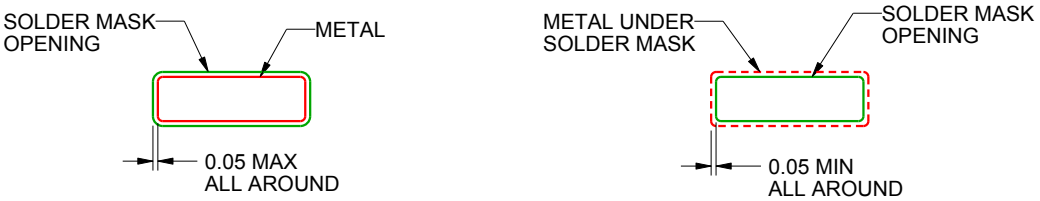

NON SOLDER MASK
DEFINED

SOLDER MASK
DEFINED

SOLDER MASK DETAILS
NOT TO SCALE

4221984/A 05/2015

NOTES: (continued)

6. Publication IPC-7351 may have alternate designs.
7. Solder mask tolerances between and around signal pads can vary based on board fabrication site.

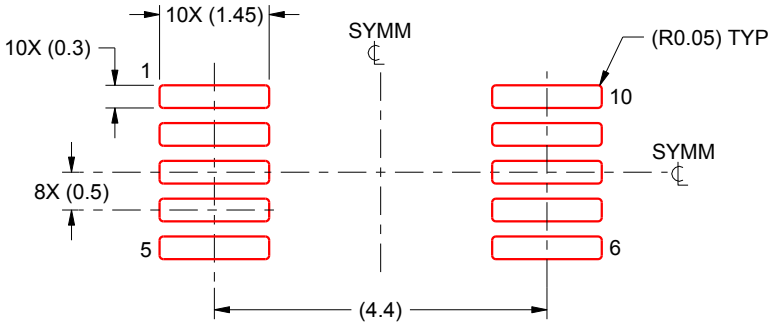

SOLDER PASTE EXAMPLE
BASED ON 0.125 mm THICK STENCIL
SCALE:10X

4221984/A 05/2015

NOTES: (continued)

8. Laser cutting apertures with trapezoidal walls and rounded corners may offer better paste release. IPC-7525 may have alternate design recommendations.
9. Board assembly site may have different recommendations for stencil design.

D (R–PDSO–G14) PLASTIC SMALL OUTLINE

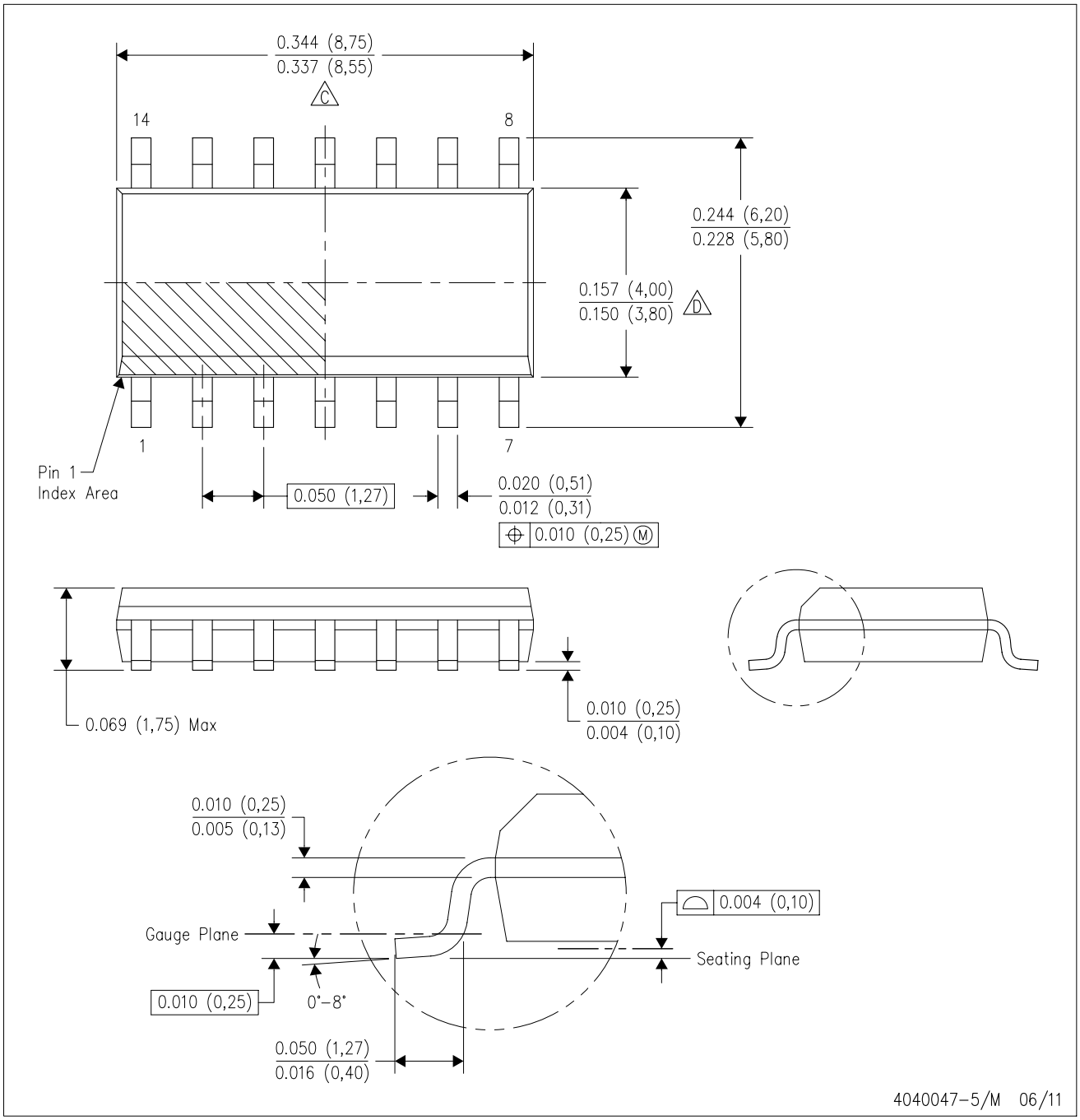

NOTES:
A. All linear dimensions are in inches (millimeters).
B. This drawing is subject to change without notice.
C. Body length does not include mold flash, protrusions, or gate burrs. Mold flash, protrusions, or gate burrs shall not exceed 0.006 (0,15) each side.
D. Body width does not include interlead flash. Interlead flash shall not exceed 0.017 (0,43) each side.
E. Reference JEDEC MS–012 variation AB.

D (R–PDSO–G14) PLASTIC SMALL OUTLINE

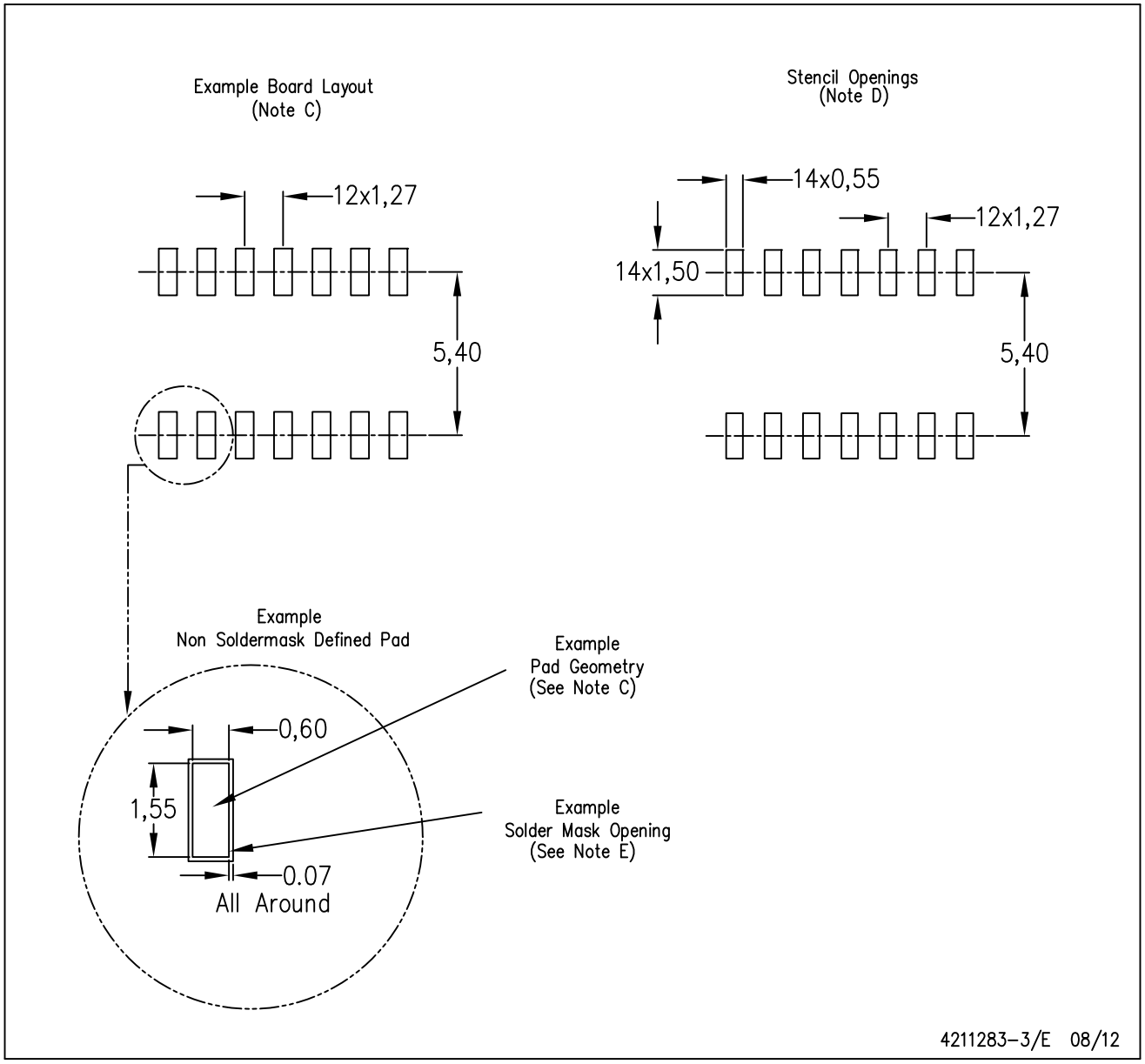

NOTES:
A. All linear dimensions are in millimeters.
B. This drawing is subject to change without notice.
C. Publication IPC–7351 is recommended for alternate designs.
D. Laser cutting apertures with trapezoidal walls and also rounding corners will offer better paste release. Customers should contact their board assembly site for stencil design recommendations. Refer to IPC–7525 for other stencil recommendations.
E. Customers should contact their board fabrication site for solder mask tolerances between and around signal pads.

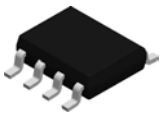

PACKAGE OUTLINE

D0008A

SOIC - 1.75 mm max height

SMALL OUTLINE INTEGRATED CIRCUIT

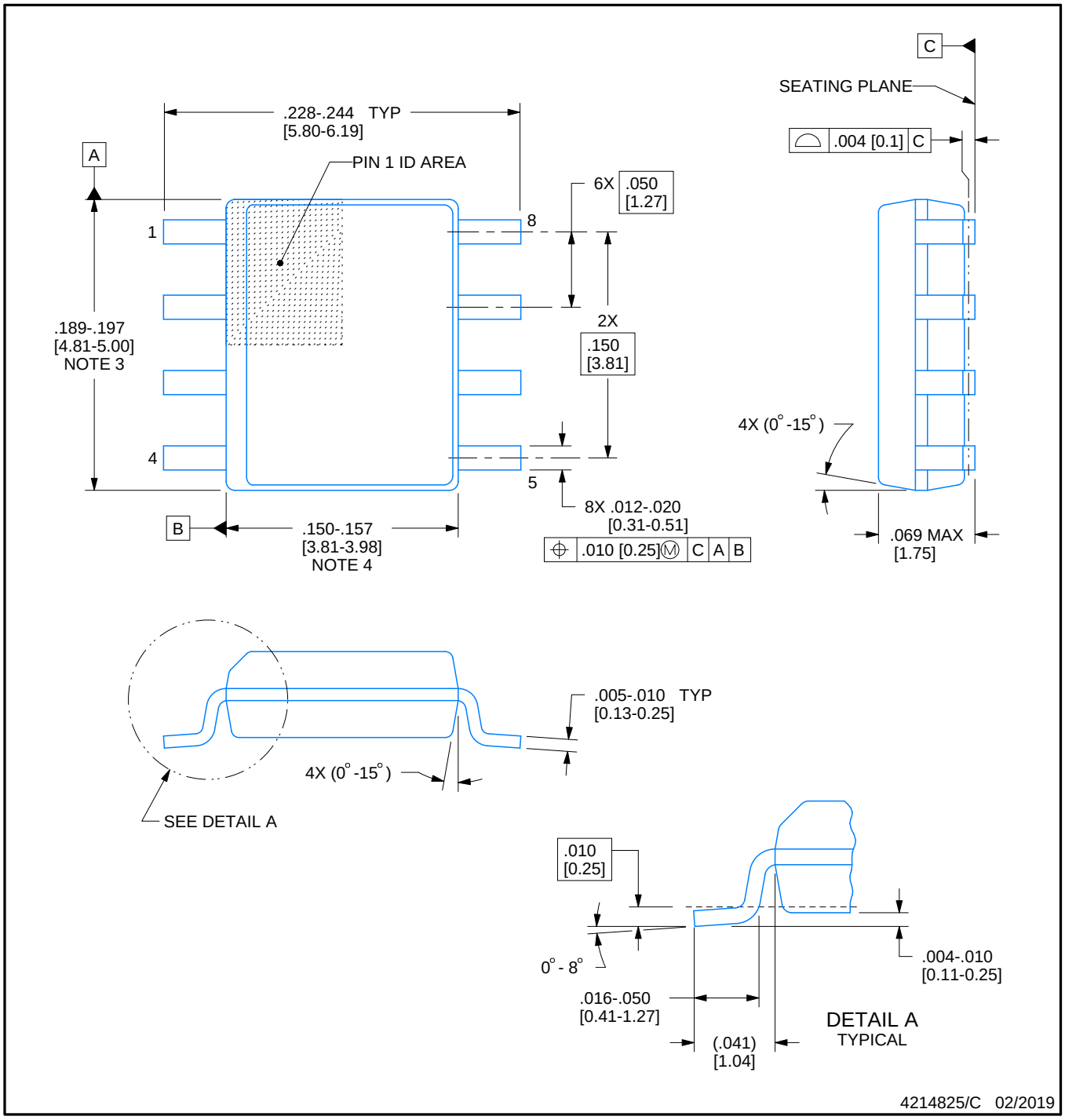

NOTES:

1. Linear dimensions are in inches [millimeters]. Dimensions in parenthesis are for reference only. Controlling dimensions are in inches. Dimensioning and tolerancing per ASME Y14.5M.
2. This drawing is subject to change without notice.
3. This dimension does not include mold flash, protrusions, or gate burrs. Mold flash, protrusions, or gate burrs shall not exceed .006 [0.15] per side.
4. This dimension does not include interlead flash.
5. Reference JEDEC registration MS-012, variation AA.

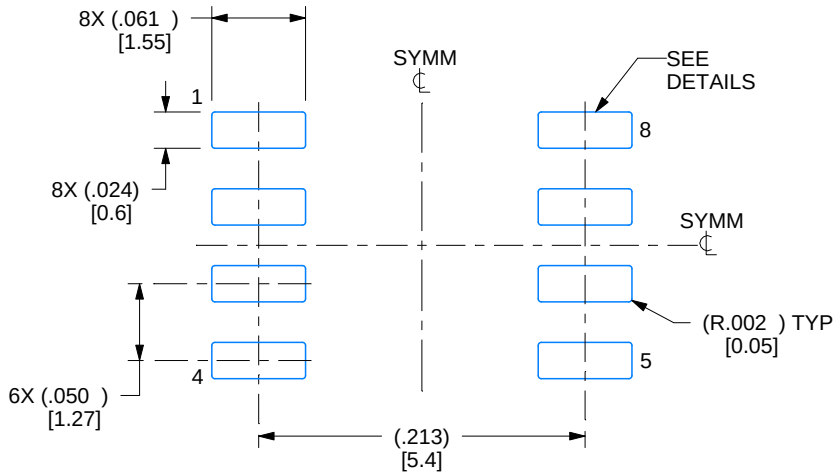

LAND PATTERN EXAMPLE
EXPOSED METAL SHOWN
SCALE:8X

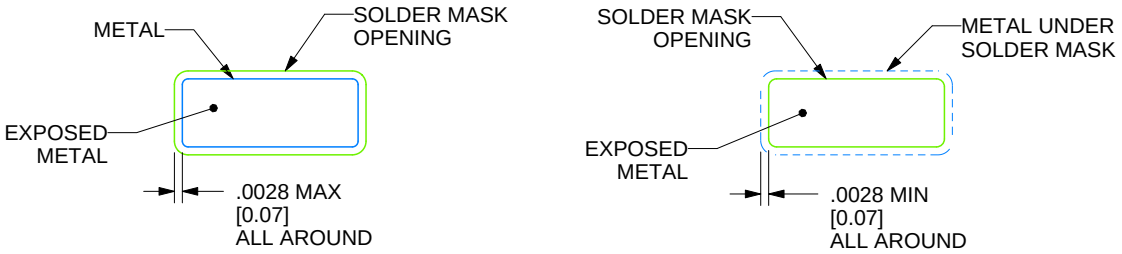

SOLDER MASK DETAILS

4214825/C 02/2019

NOTES: (continued)

6. Publication IPC-7351 may have alternate designs.
7. Solder mask tolerances between and around signal pads can vary based on board fabrication site.

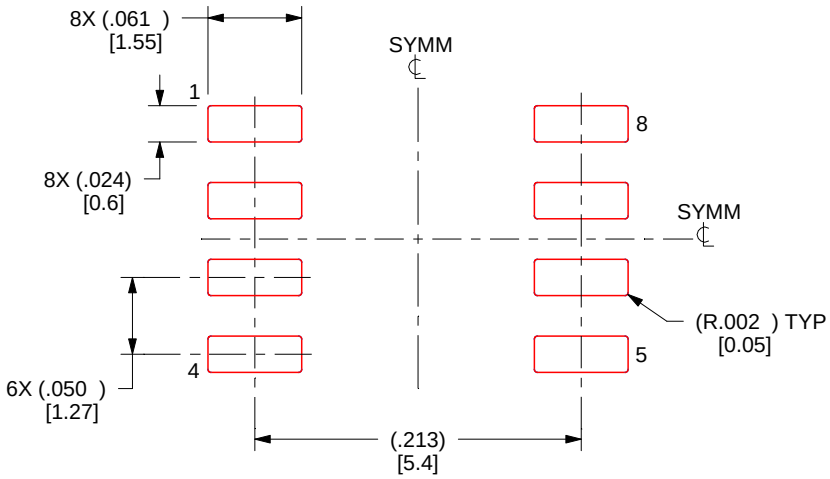

SOLDER PASTE EXAMPLE
BASED ON .005 INCH [0.125 MM] THICK STENCIL
SCALE:8X

4214825/C 02/2019

NOTES: (continued)

8. Laser cutting apertures with trapezoidal walls and rounded corners may offer better paste release. IPC-7525 may have alternate design recommendations.
9. Board assembly site may have different recommendations for stencil design.

DGK (S–PDSO–G8) PLASTIC SMALL–OUTLINE PACKAGE

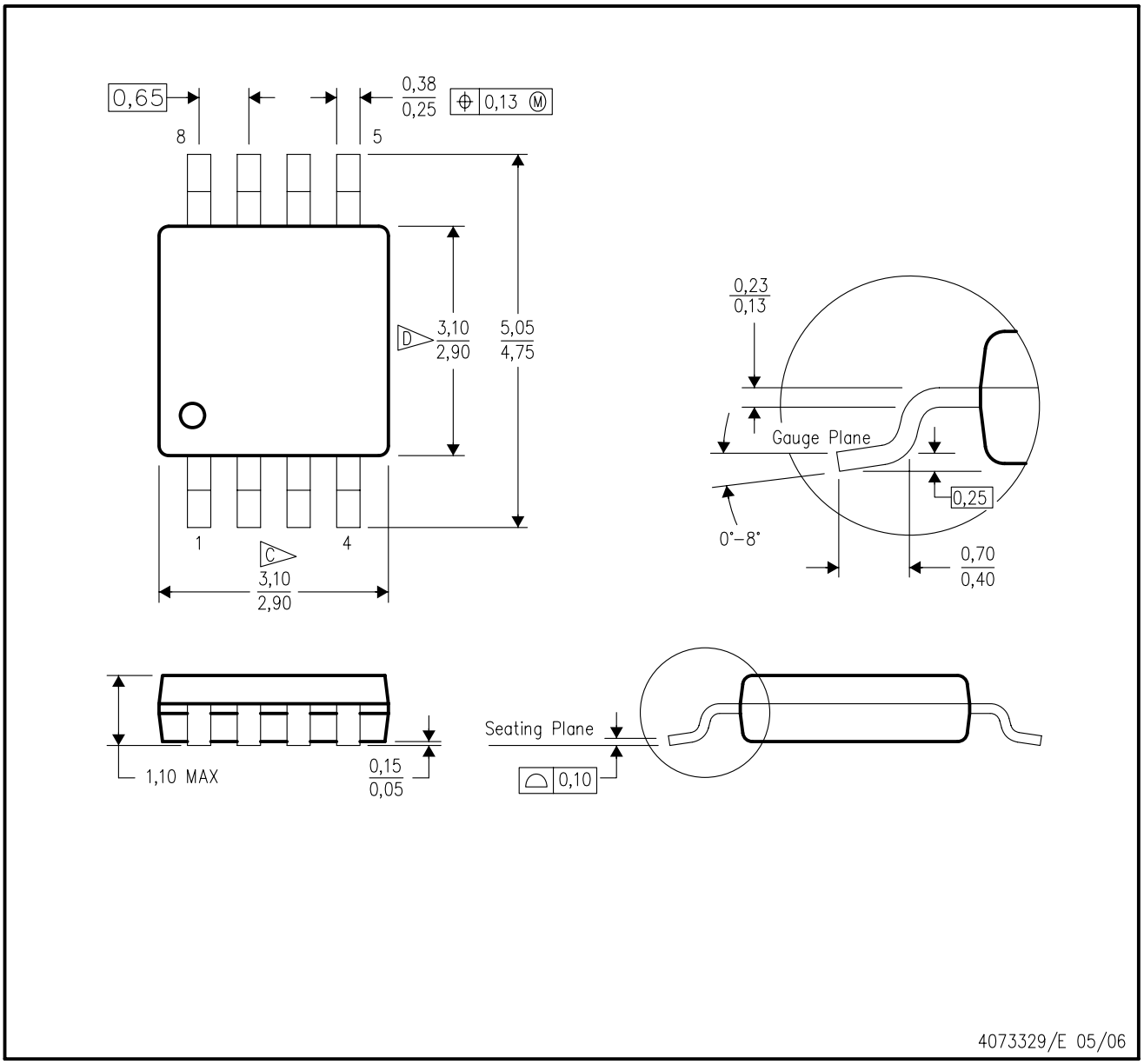

NOTES:
A. All linear dimensions are in millimeters.
B. This drawing is subject to change without notice.
C. Body length does not include mold flash, protrusions, or gate burrs. Mold flash, protrusions, or gate burrs shall not exceed 0.15 per end.
D. Body width does not include interlead flash. Interlead flash shall not exceed 0.50 per side.
E. Falls within JEDEC MO–187 variation AA, except interlead flash.

DGK (S–PDSO–G8) PLASTIC SMALL OUTLINE PACKAGE

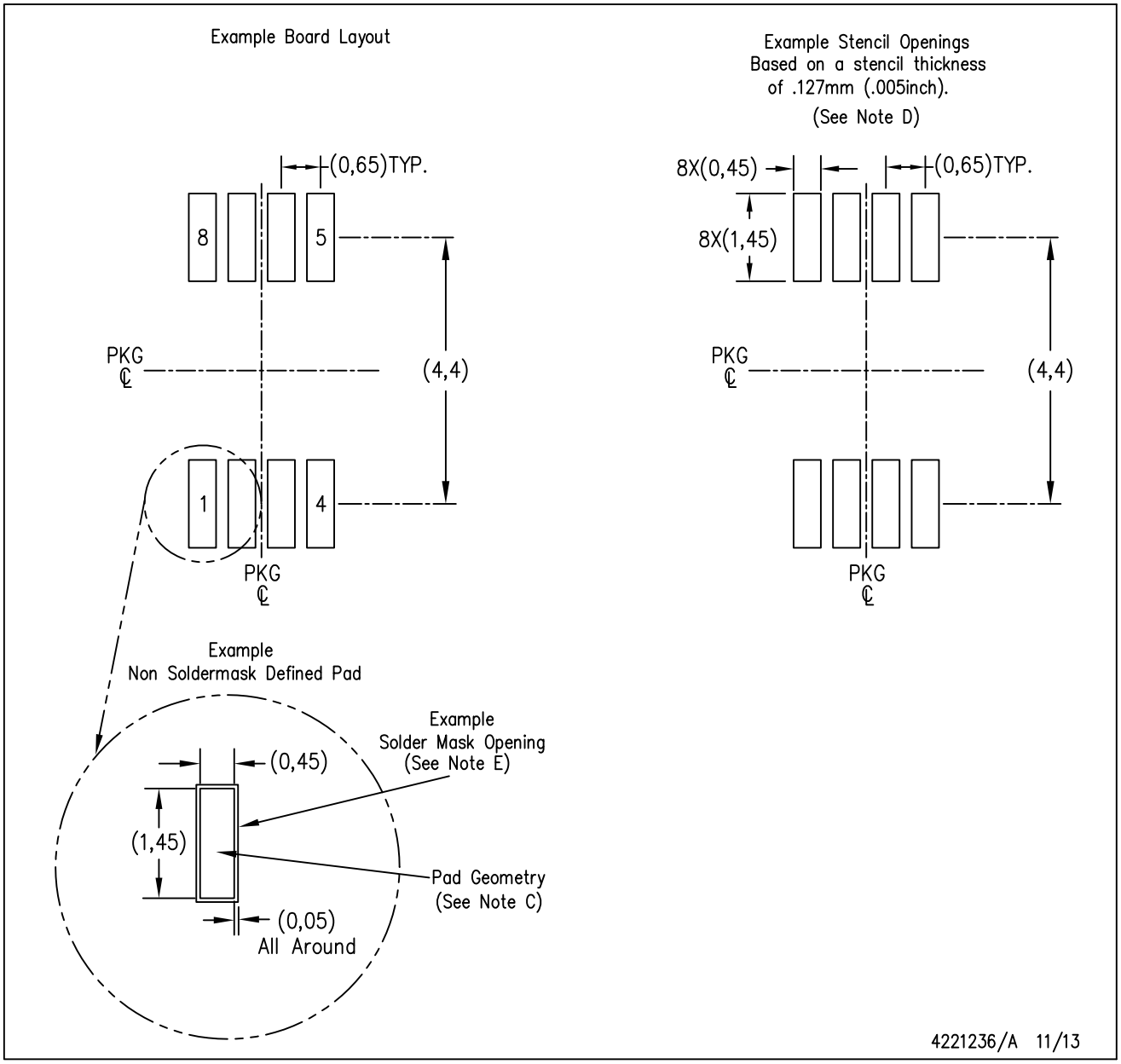

NOTES:
A. All linear dimensions are in millimeters.
B. This drawing is subject to change without notice.
C. Publication IPC–7351 is recommended for alternate designs.
D. Laser cutting apertures with trapezoidal walls and also rounding corners will offer better paste release. Customers should contact their board assembly site for stencil design recommendations. Refer to IPC–7525 for other stencil recommendations.
E. Customers should contact their board fabrication site for solder mask tolerances between and around signal pads.

重要声明和免责声明

TI“按原样”提供技术和可靠性数据（包括数据表）、设计资源（包括参考设计）、应用或其他设计建议、网络工具、安全信息和其他资源，不保证没有瑕疵且不做出任何明示或暗示的担保，包括但不限于对适销性、某特定用途方面的适用性或不侵犯任何第三方知识产权的暗示担保。

这些资源可供使用 TI 产品进行设计的熟练开发人员使用。您将自行承担以下全部责任：(1) 针对您的应用选择合适的 TI 产品，(2) 设计、验证并测试您的应用，(3) 确保您的应用满足相应标准以及任何其他功能安全、信息安全、监管或其他要求。

这些资源如有变更，恕不另行通知。TI 授权您仅可将这些资源用于研发本资源所述的 TI 产品的应用。严禁对这些资源进行其他复制或展示。您无权使用任何其他 TI 知识产权或任何第三方知识产权。您应全额赔偿因在这些资源的使用中对 TI 及其代表造成的任何索赔、损害、成本、损失和债务，TI 对此概不负责。

TI 提供的产品受 TI 的销售条款或 ti.com 上其他适用条款/TI 产品随附的其他适用条款的约束。TI 提供这些资源并不会扩展或以其他方式更改 TI 针对 TI 产品发布的适用的担保或担保免责声明。

TI 反对并拒绝您可能提出的任何其他或不同的条款。

邮寄地址：Texas Instruments, Post Office Box 655303, Dallas, Texas 75265
Copyright © 2022，德州仪器 (TI) 公司