TPS77101/115/118/127/128/133/150 WITH $\overline{\text{RESET}}$ OUTPUT TPS77201/215/218/227/228/233/250 WITH POWER GOOD OUTPUT 150-mA LDO REGULATORS WITH 8-PIN MSOP PACKAGING

SLVS225D – FEBRUARY 2000 – REVISED OCTOBER 2000

- **Open Drain Power-On Reset With 220-ms Delay (TPS771xx)**
- **Open Drain Power-Good (PG) Status Output (TPS772xx)**
- **150-mA Low-Dropout Voltage Regulator**
- **Available in 1.5-V, 1.8-V, 2.7-V, 2.8-V, 3.3-V, 5.0-V Fixed Output and Adjustable Versions**
- **Dropout Voltage Typically 115 mV at 150 mA (TPS77133, TPS77233)**
- **Ultralow 92-µA Quiescent Current (Typ)**
- **8-Pin MSOP (DGK) Package**
- **Low Noise (55 µV_{rms}) Without External Filter (Bypass) Capacitor (TPS77118, TPS77218)**
- **2% Tolerance Over Specified Conditions for Fixed-Output Versions**
- **Fast Transient Response**
- **Thermal Shutdown Protection**

TPS771xx
DGK Package
(TOP VIEW)

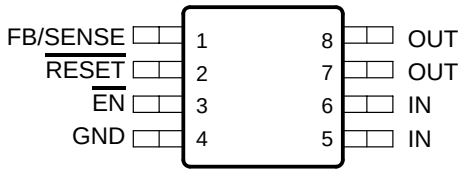

TPS772xx
DGK Package
(TOP VIEW)

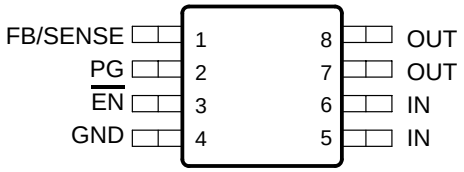

TPS77x33
DROPOUT VOLTAGE
vs
JUNCTION TEMPERATURE

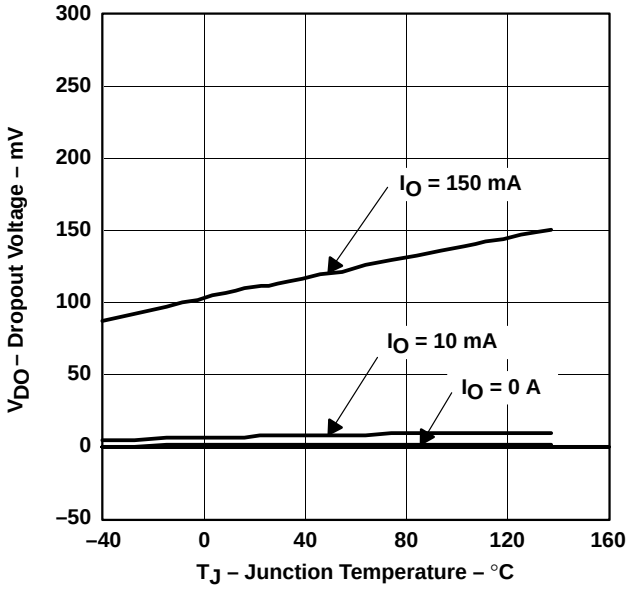

description

The TPS771xx and TPS772xx are low-dropout regulators with integrated power-on reset and power good (PG) function respectively. These devices are capable of supplying 150 mA of output current with a dropout of 115 mV (TPS77133, TPS77233). Quiescent current is 92 µA at full load dropping down to 1 µA when device is disabled. These devices are optimized to be stable with a wide range of output capacitors including low ESR ceramic (10 µF) or low capacitance (1 µF) tantalum capacitors. These devices have extremely low noise output performance (55 µV_{rms}) without using any added filter capacitors. TPS771xx and TPS772xx are designed to have fast transient response for larger load current changes.

The TPS771xx or TPS772xx is offered in 1.5 V, 1.8-V, 2.7-V, 2.8-V, 3.3-V, and 5.0 V fixed-voltage versions and in an adjustable version (programmable over the range of 1.5 V to 5.5 V). Output voltage tolerance is 2% over line, load, and temperature ranges. The TPS771xx and TPS772xx families are available in 8-pin MSOP (DGK) packages.

Because the PMOS device behaves as a low-value resistor, the dropout voltage is very low (typically 115 mV at an output current of 150 mA for 3.3 volt option) and is directly proportional to the output current. Additionally, since the PMOS pass element is a voltage-driven device, the quiescent current is very low and independent of output loading (typically 92 µA over the full range of output current, 0 mA to 150 mA). These two key specifications yield a significant improvement in operating life for battery-powered systems.

Please be aware that an important notice concerning availability, standard warranty, and use in critical applications of Texas Instruments semiconductor products and disclaimers thereto appears at the end of this data sheet.

PRODUCTION DATA information is current as of publication date. Products conform to specifications per the terms of Texas Instruments standard warranty. Production processing does not necessarily include testing of all parameters.

Copyright © 2000, Texas Instruments Incorporated

description (continued)

The device is enabled when the $\overline{\text{EN}}$ pin is connected to a low-level input voltage. This LDO family also features a sleep mode; applying a TTL high signal to $\overline{\text{EN}}$ (enable) shuts down the regulator, reducing the quiescent current to less than 1 µA at T_J = 25°C.

The TPS771xx features an integrated power-on reset, commonly used as a supply voltage supervisor (SVS) or reset output voltage. The $\overline{\text{RESET}}$ output of the TPS771xx initiates a reset in DSP, microcomputer or microprocessor systems at power up and in the event of an undervoltage condition. An internal comparator in the TPS771xx monitors the output voltage of the regulator to detect an undervoltage condition on the regulated output voltage. When OUT reaches 95% of its regulated voltage, $\overline{\text{RESET}}$ will go to a high-impedance state after a 220 ms delay. $\overline{\text{RESET}}$ will go to low-impedance state when OUT is pulled below 95% (i.e. over load condition) of its regulated voltage.

For the TPS772xx, the power good terminal (PG) is an active high output, which can be used to implement a power-on reset or a low-battery indicator. An internal comparator in the TPS772xx monitors the output voltage of the regulator to detect an undervoltage condition on the regulated output voltage. When OUT falls below 82% of its regulated voltage, PG will go to a low-impedance state. PG will go to a high-impedance state when OUT is above 82% of its regulated voltage.

AVAILABLE OPTIONS

T_J	OUTPUT VOLTAGE (V)	PACKAGED DEVICES MSOP (DGK)			
	TYP		TPS771xx SYMBOL		TPS772xx SYMBOL
–40°C to 125°C	5.0	TPS77150DGK	AFV	TPS77250DGK	AGE
	3.3	TPS77133DGK	AFU	TPS77233DGK	AGD
	2.8	TPS77128DGK	AFS	TPS77228DGK	AGB
	2.7	TPS77127DGK	AFR	TPS77227DGK	AGA
	1.8	TPS77118DGK	AFP	TPS77218DGK	AFY
	1.5	TPS77115DGK	AFO	TPS77215DGK	AFX
	Adjustable 1.5 V to 5.5 V	TPS77101DGK	AFN	TPS77201DGK	AFW

NOTE: The TPS77101 and TPS77201 are programmable using an external resistor divider (see application information). The DGK package is available taped and reeled. Add an R suffix to the device type (e.g., TPS77101DGKR).

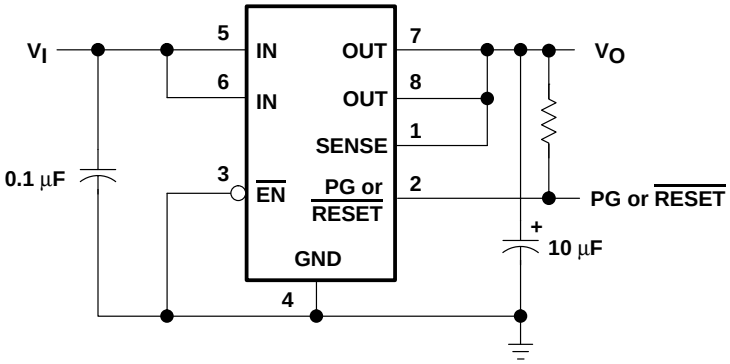

Figure 1. Typical Application Configuration (For Fixed Output Options)

functional block diagrams

adjustable version

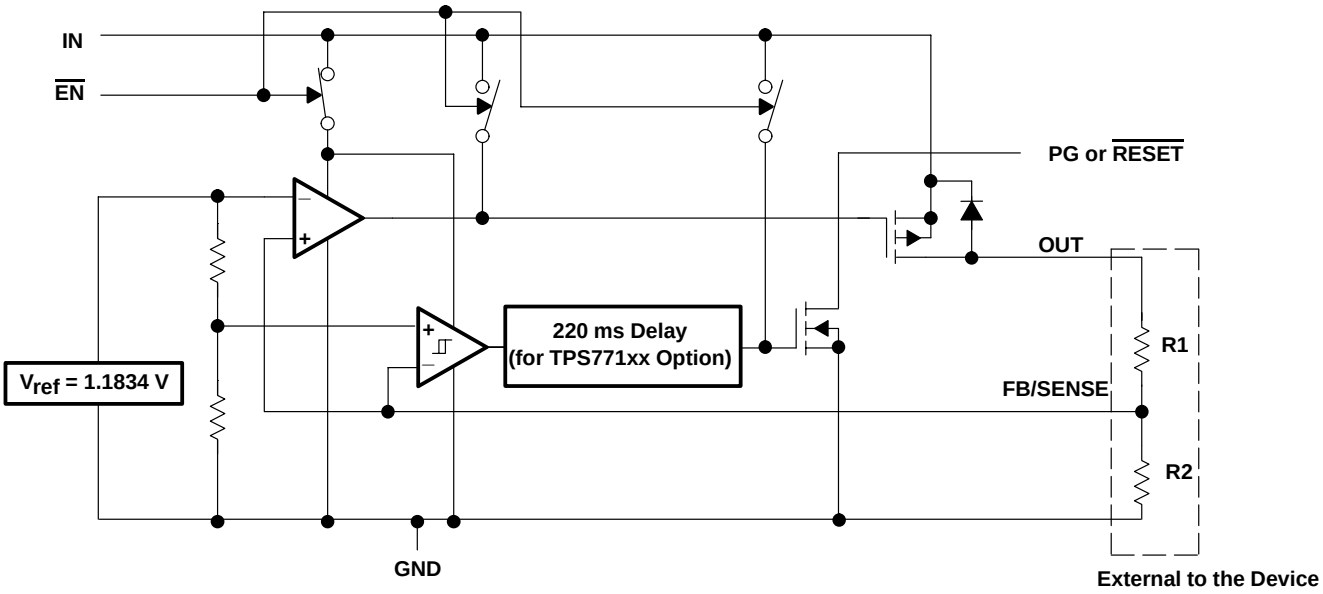

fixed-voltage version

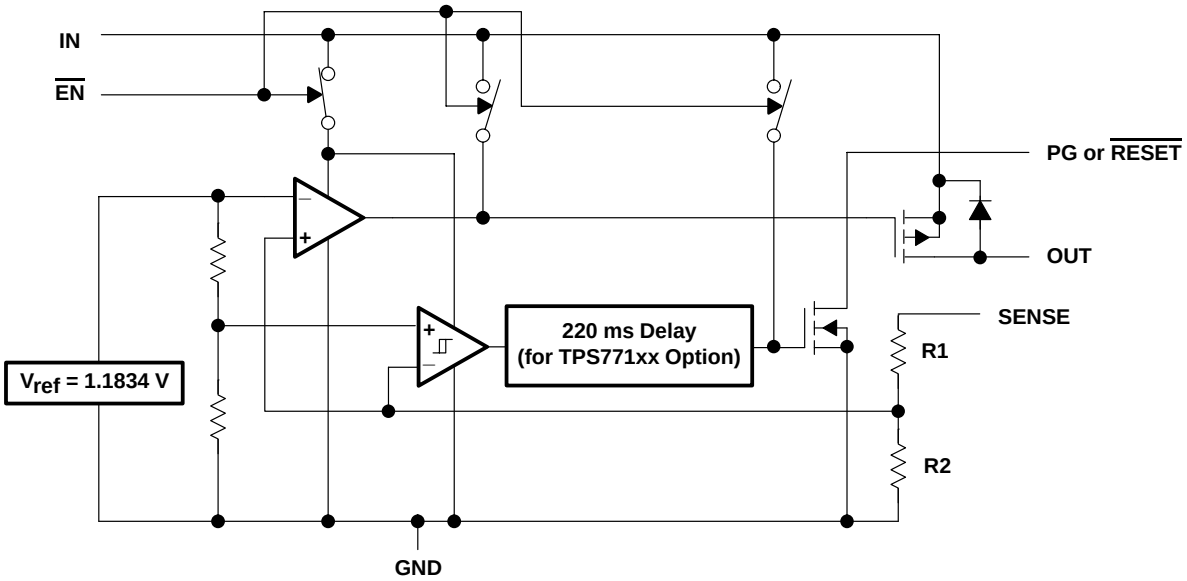

Terminal Functions

TERMINAL NAME	TERMINAL NO.	I/O	DESCRIPTION
TPS771XX			
FB/SENSE	1	I	Feedback input voltage for adjustable device (sense input for fixed options)
$\overline{\text{RESET}}$	2	O	Reset output
$\overline{\text{EN}}$	3	I	Enable input
GND	4		Regulator ground
IN	5, 6	I	Input voltage
OUT	7, 8	O	Regulated output voltage
TPS772XX			
FB/SENSE	1	I	Feedback input voltage for adjustable device (sense input for fixed options)
PG	2	O	Power good
$\overline{\text{EN}}$	3	I	Enable input
GND	4		Regulator ground
IN	5, 6	I	Input voltage
OUT	7, 8	O	Regulated output voltage

TPS771xx $\overline{\text{RESET}}$ timing diagram

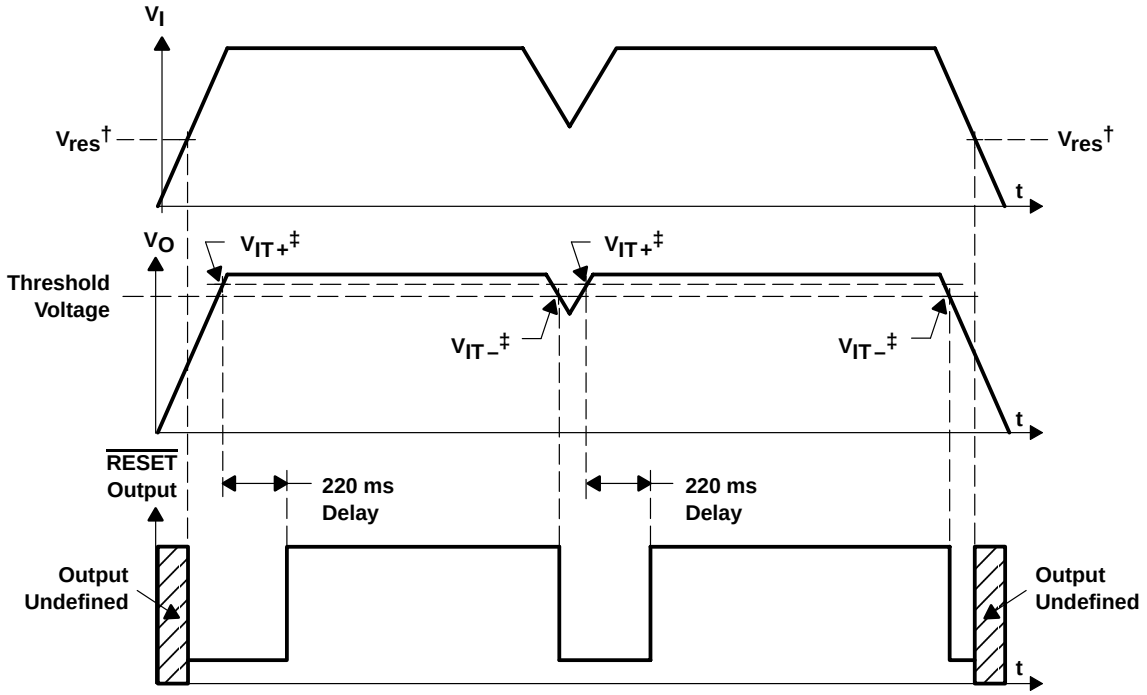

† V_{res} is the minimum input voltage for a valid $\overline{\text{RESET}}$. The symbol V_{res} is not currently listed within EIA or JEDEC standards for semiconductor symbology.

‡ V_{IT} – Trip voltage is typically 5% lower than the output voltage (95%V_O) V_{IT-} to V_{IT+} is the hysteresis voltage.

TPS772xx PG timing diagram

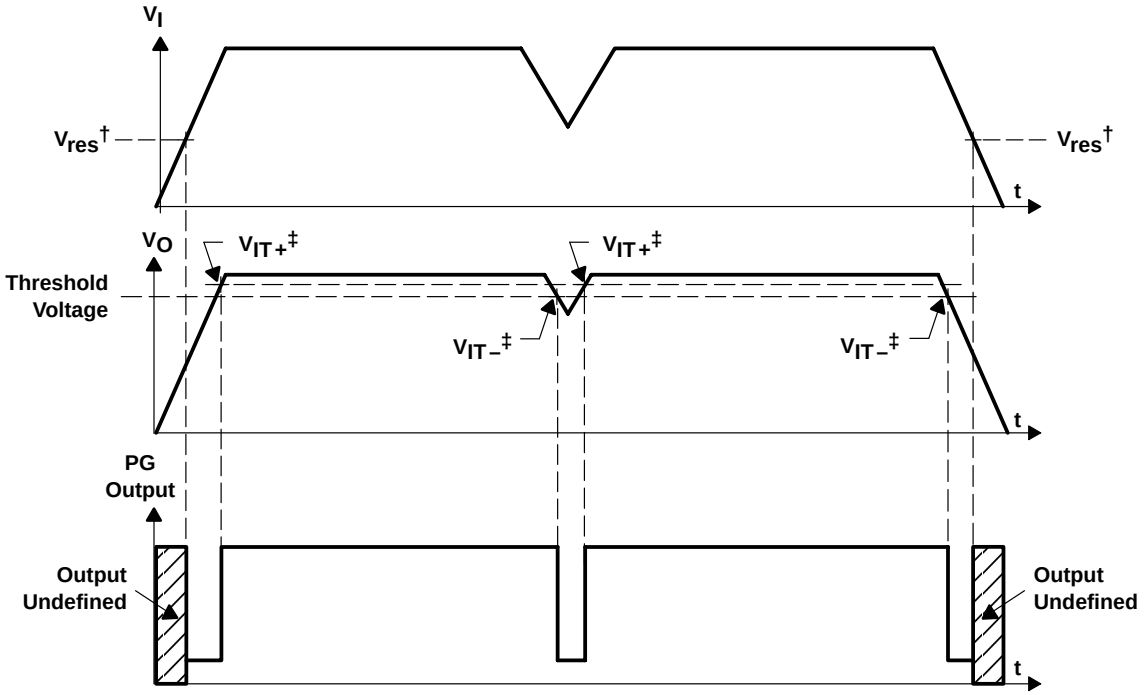

† V_{res} is the minimum input voltage for a valid PG. The symbol V_{res} is not currently listed within EIA or JEDEC standards for semiconductor symbology.

‡ V_{IT} – Trip voltage is typically 18% lower than the output voltage (82%V_O) V_{IT-} to V_{IT+} is the hysteresis voltage.

absolute maximum ratings over operating junction temperature range (unless otherwise noted)†

Input voltage range, V_I, (see Note 1)	–0.3 V to 13.5 V
Voltage range at $\overline{\text{EN}}$	–0.3 V to 16.5 V
Maximum $\overline{\text{RESET}}$ voltage (TPS771xx)	16.5 V
Maximum PG voltage (TPS772xx)	16.5 V
Peak output current	Internally limited
Continuous total power dissipation	See Dissipation Rating Table
Output voltage, V_O (OUT, FB)	5.5 V
Operating virtual junction temperature range, T_J	–40°C to 125°C
Storage temperature range, T_{stg}	–65°C to 150°C
ESD rating, HBM	2 kV

† Stresses beyond those listed under “absolute maximum ratings” may cause permanent damage to the device. These are stress ratings only, and functional operation of the device at these or any other conditions beyond those indicated under “recommended operating conditions” is not implied. Exposure to absolute-maximum-rated conditions for extended periods may affect device reliability.

NOTE 1: All voltage values are with respect to network terminal ground.

DISSIPATION RATING TABLE – FREE-AIR TEMPERATURES

PACKAGE	AIR FLOW (CFM)	θ_{JA} (°C/W)	θ_{JC} (°C/W)	T_A < 25°C POWER RATING	DERATING FACTOR ABOVE T_A = 25°C	T_A = 70°C POWER RATING	T_A = 85°C POWER RATING
DGK	0	266.2	3.84	376 mW	3.76 mW/°C	207 mW	150 mW
	150	255.2	3.92	392 mW	3.92 mW/°C	216 mW	157 mW
	250	242.8	4.21	412 mW	4.12 mW/°C	227 mW	165 mW

recommended operating conditions

	MIN	MAX	UNIT
Input voltage, V_I†	2.7	10	V
Output voltage range, V_O	1.5	5.5	V
Output current, I_O (see Note 2)	0	150	mA
Operating virtual junction temperature, T_J (see Note 2)	–40	125	°C

† To calculate the minimum input voltage for your maximum output current, use the following equation: $V_{I(min)} = V_{O(max)} + V_{DO(max\ load)}$.

NOTE 2: Continuous current and operating junction temperature are limited by internal protection circuitry, but it is not recommended that the device operate under conditions beyond those specified in this table for extended periods of time.

electrical characteristics over recommended operating junction temperature range (–40°C to 125°C), $V_I = V_{O(typ)} + 1$ V, $I_O = 1$ mA, $\overline{EN} = 0$ V, $C_O = 10$ µF (unless otherwise noted)

PARAMETER		TEST CONDITIONS		MIN	TYP	MAX	UNIT
Output voltage (see Notes 3 and 4)	Adjustable voltage	$1.5\ V \le V_O \le 5.5\ V$,	$T_J = 25°C$		V_O		V
		$1.5\ V \le V_O \le 5.5\ V$		$0.98V_O$		$1.02V_O$	
	1.5-V Output	$T_J = 25°C$,	$2.7\ V < V_{IN} < 10\ V$		1.5		V
		$2.7\ V < V_{IN} < 10\ V$		1.470		1.530	
	1.8-V Output	$T_J = 25°C$,	$2.8\ V < V_{IN} < 10\ V$		1.8		
		$2.8\ V < V_{IN} < 10\ V$		1.764		1.836	
	2.7-V Output	$T_J = 25°C$,	$3.7\ V < V_{IN} < 10\ V$		2.7		
		$3.7\ V < V_{IN} < 10\ V$		2.646		2.754	
	2.8-V Output	$T_J = 25°C$,	$3.8\ V < V_{IN} < 10\ V$		2.8		
		$3.8\ V < V_{IN} < 10\ V$		2.744		2.856	
	3.3-V Output	$T_J = 25°C$,	$4.3\ V < V_{IN} < 10\ V$		3.3		
		$4.3\ V < V_{IN} < 10\ V$		3.234		3.366	
	5.0-V Output	$T_J = 25°C$,	$6\ V < V_{IN} < 10\ V$		5.0		V
		$6\ V < V_{IN} < 10\ V$		4.900		5.100	
Quiescent current (GND current) (see Notes 3 and 4)		$T_J = 25°C$			92		µA
						125	
Output voltage line regulation ($\Delta V_O/V_O$) (see Note 5)		$V_O + 1\ V < V_I \le 10\ V$,	$T_J = 25°C$		0.005		%/V
		$V_O + 1\ V < V_I \le 10\ V$				0.05	%/V
Load regulation		$T_J = 25°C$			1		mV
Output noise voltage		BW = 300 Hz to 100 kHz, $T_J = 25°C$, TPS77118, TPS77218			55		µVrms
Output current Limit		$V_O = 0$ V			0.9	1.3	A
Peak output current		2 ms pulse width,	50% duty cycle		400		mA
Thermal shutdown junction temperature					144		°C
Standby current		$\overline{EN} = V_I$,	$T_J = 25°C$			1	µA
		$\overline{EN} = V_I$				3	µA
FB input current	Adjustable voltage	FB = 1.5 V				1	µA
High level enable input voltage				2			V
Low level enable input voltage						0.7	V
Enable input current				–1		1	µA
Power supply ripple rejection (TPS77118, TPS77218)		f = 1 KHz,	$T_J = 25°C$		55		dB

NOTES: 3. Minimum input operating voltage is 2.7 V or $V_{O(typ)} + 1$ V, whichever is greater. Maximum input voltage = 10 V, minimum output current 1 mA.

4. If $V_O < 1.8$ V then $V_{I(max)} = 10$ V, $V_{I(min)} = 2.7$ V:

$$\text{Line regulation (mV)} = (\%/V) \times \frac{V_O\left(V_{I(max)} - 2.7\ V\right)}{100} \times 1000$$

If $V_O > 2.5$ V then $V_{I(max)} = 10$ V, $V_{I(min)} = Vo + 1$ V:

$$\text{Line regulation (mV)} = (\%/V) \times \frac{V_O\left(V_{I(max)} - \left(V_O + 1\right)\right)}{100} \times 1000$$

5. $I_O = 1$ mA to 150 mA

electrical characteristics over recommended operating junction temperature range (–40°C to 125°C), $V_I = V_{O(typ)} + 1$ V, $I_O = 1$ mA, $\overline{EN} = 0$ V, $C_O = 10$ µF (unless otherwise noted) (continued)

PARAMETER			TEST CONDITIONS		MIN	TYP	MAX	UNIT
PG (TPS772xx)	Minimum input voltage for valid PG		$I_{(PG)}$ = 300µA	$V_{(PG)} \le 0.8$ V		1.1		V
	Trip threshold voltage		V_O decreasing		79		85	$\%V_O$
	Hysteresis voltage		Measured at V_O			0.5		$\%V_O$
	Output low voltage		V_I = 2.7 V,	$I_{(PG)}$ = 1mA		0.15	0.4	V
	Leakage current		$V_{(PG)}$ = 5 V				1	µA
Reset (TPS771xx)	Minimum input voltage for valid $\overline{\text{RESET}}$		$I_{(RESET)}$ = 300 µA			1.1		V
	Trip threshold voltage		V_O decreasing		92		98	$\%V_O$
	Hysteresis voltage		Measured at V_O			0.5		$\%V_O$
	Output low voltage		V_I = 2.7 V,	$I_{(RESET)}$ = 1 mA		0.15	0.4	V
	Leakage current		$V_{(RESET)}$ = 5 V				1	µA
	RESET time-out delay					220		ms
V_{DO}	Dropout voltage (see Note 6)	2.8-V Output	I_O = 150 mA,	T_J = 25°C		150		mV
			I_O = 150 mA,				265	
		3.3-V Output	I_O = 150 mA,	T_J = 25°C		115		
			I_O = 150 mA				200	
		5.0-V Output	I_O = 150 mA,	T_J = 25°C		75		
			I_O = 150 mA				115	

NOTE 6: IN voltage equals V_O(typ) – 100 mV; 1.5 V, 1.8 V, and 2.7 V dropout voltage limited by input voltage range limitations (i.e., 3.3 V input voltage needs to drop to 3.2 V for purpose of this test).

TYPICAL CHARACTERISTICS

Table of Graphs

			FIGURE
V_O	Output voltage	vs Output current	2, 3
		vs Junction temperature	4, 5
	Ground current	vs Junction temperature	6
	Power supply rejection ratio	vs Frequency	7
	Output spectral noise density	vs Frequency	8
Z_o	Output impedance	vs Frequency	9
V_{DO}	Dropout voltage	vs Input voltage	10
		vs Junction temperature	11
	Line transient response		12, 14
	Load transient response		13, 15
	Output voltage and enable pulse	vs Time	16
	Equivalent series resistance (ESR)	vs Output current	18 – 21

TYPICAL CHARACTERISTICS

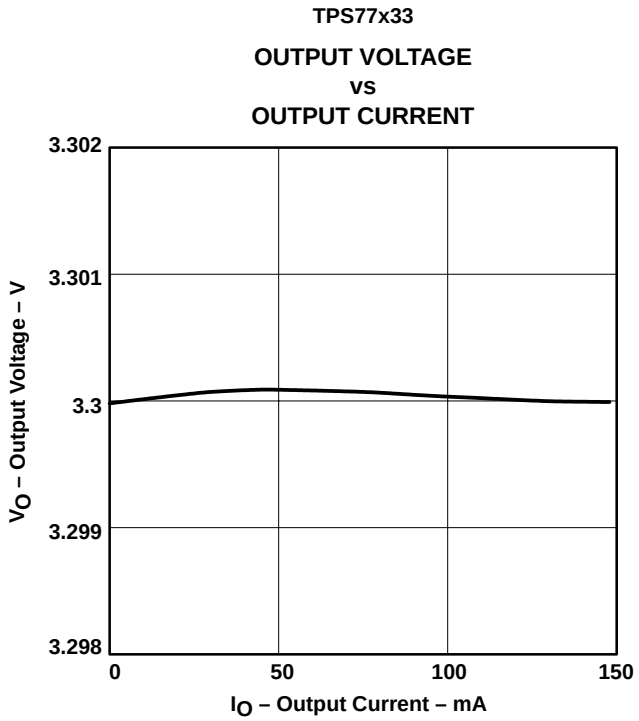

Figure 2

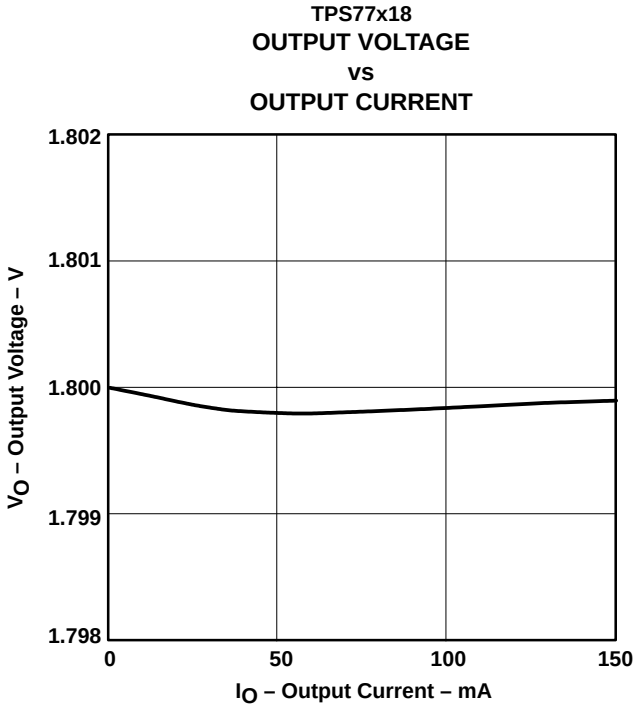

Figure 3

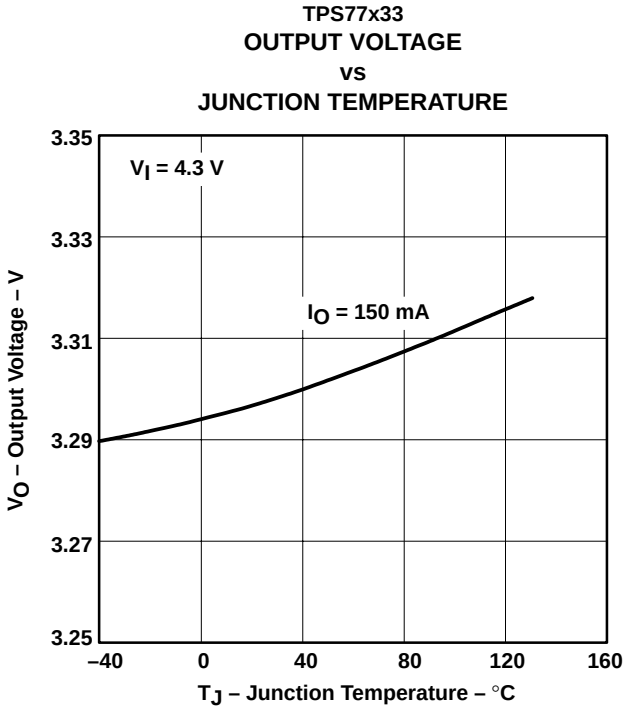

Figure 4

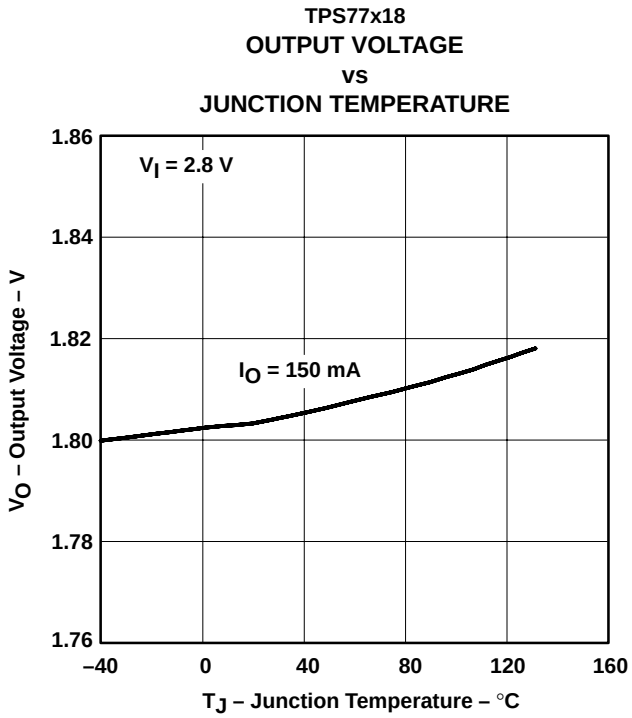

Figure 5

TYPICAL CHARACTERISTICS

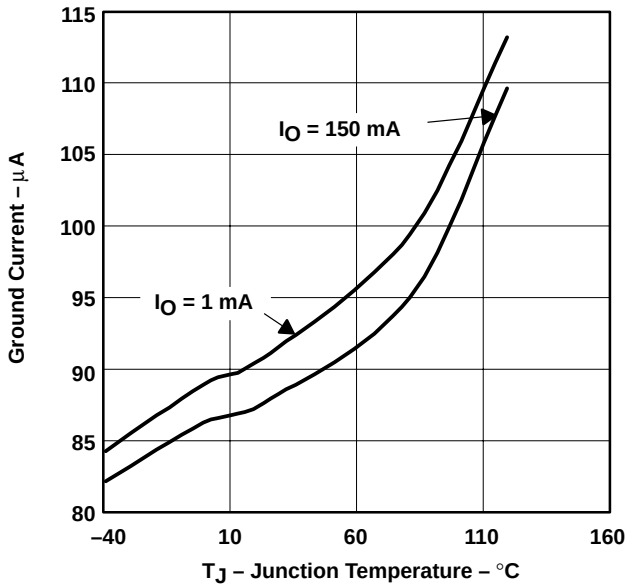

Figure 6

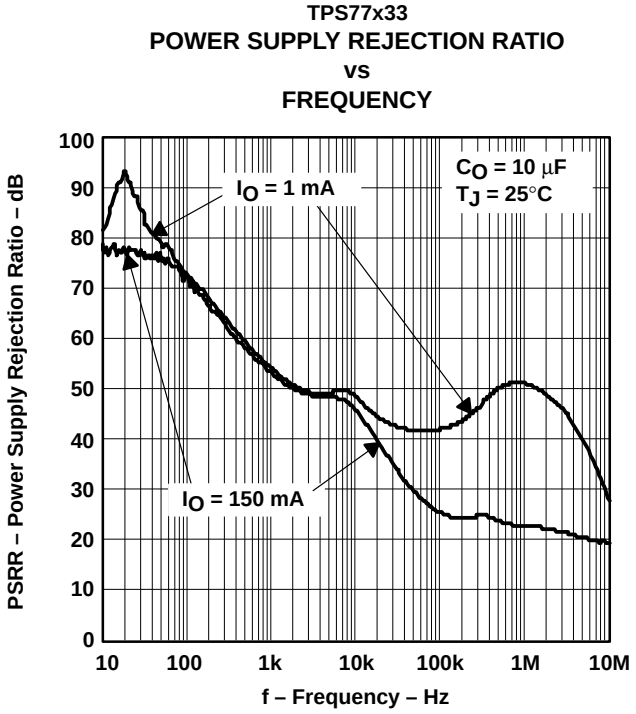

Figure 7

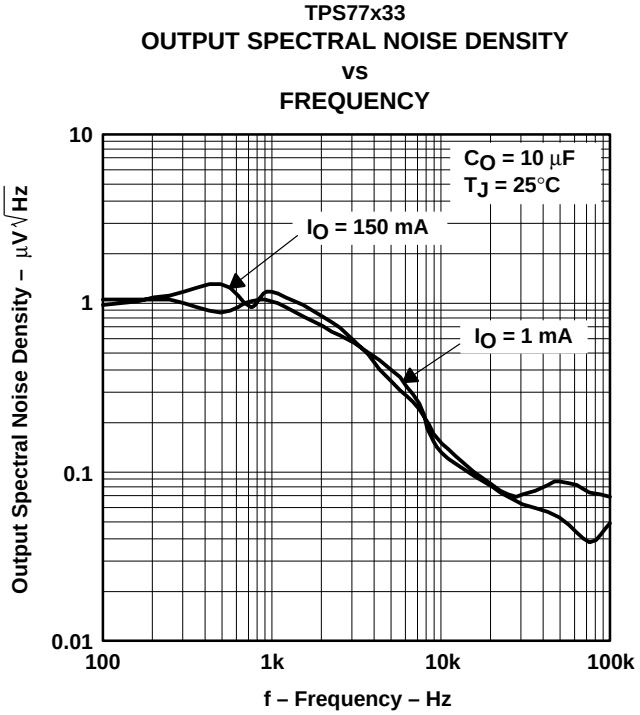

Figure 8

TYPICAL CHARACTERISTICS

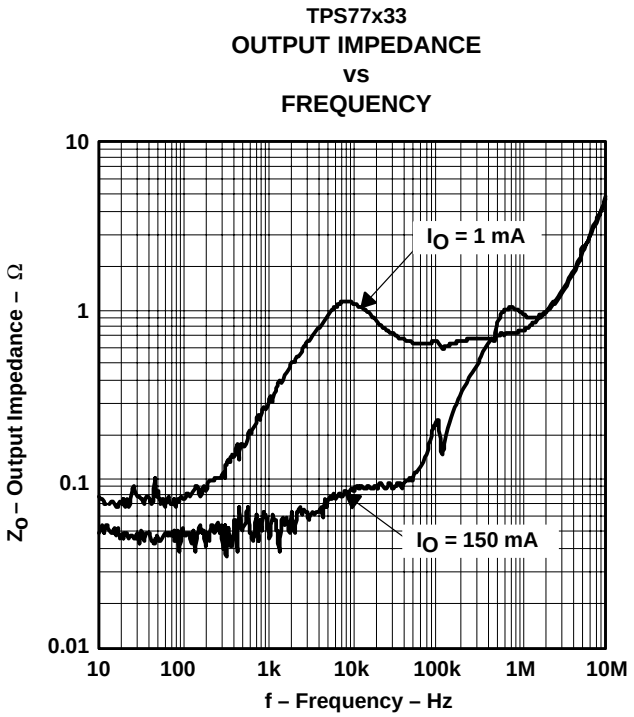

Figure 9

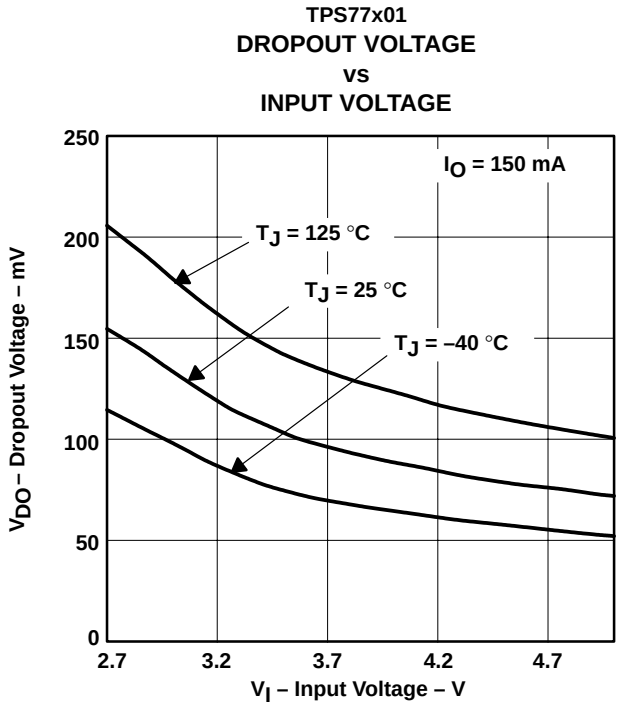

Figure 10

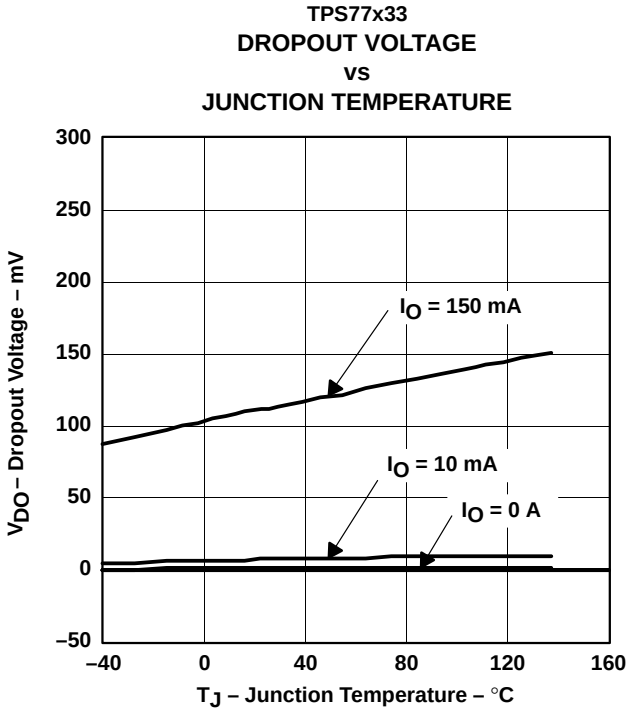

Figure 11

TYPICAL CHARACTERISTICS

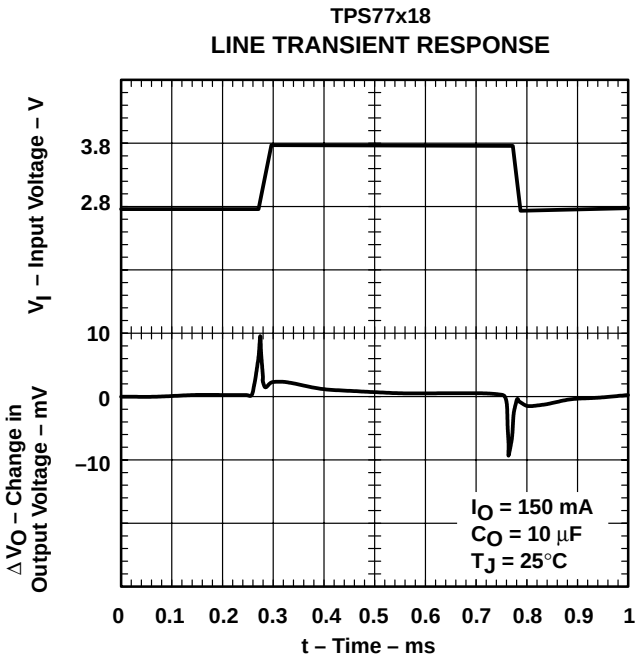

Figure 12

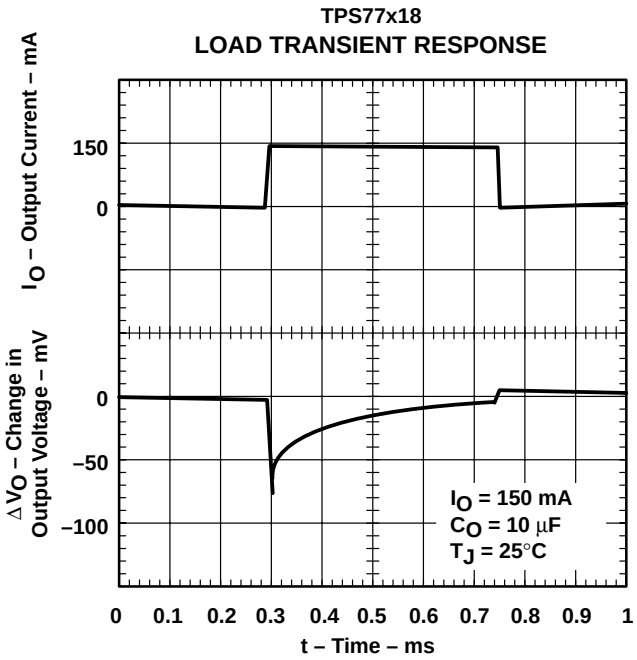

Figure 13

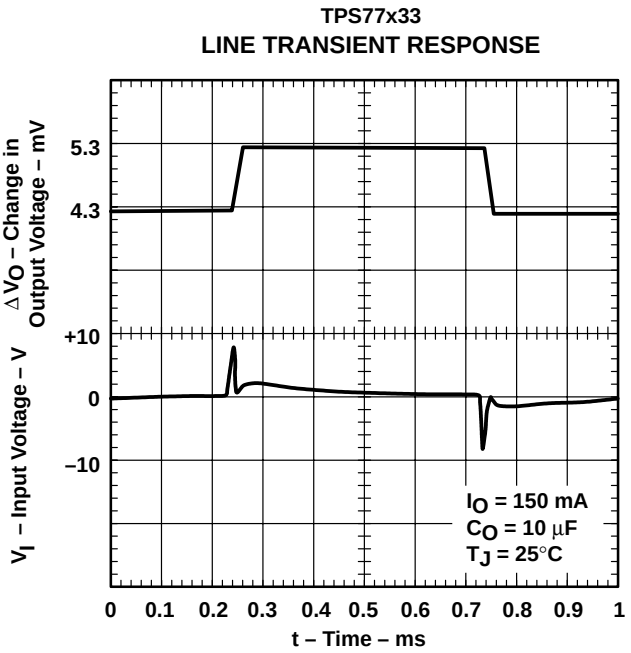

Figure 14

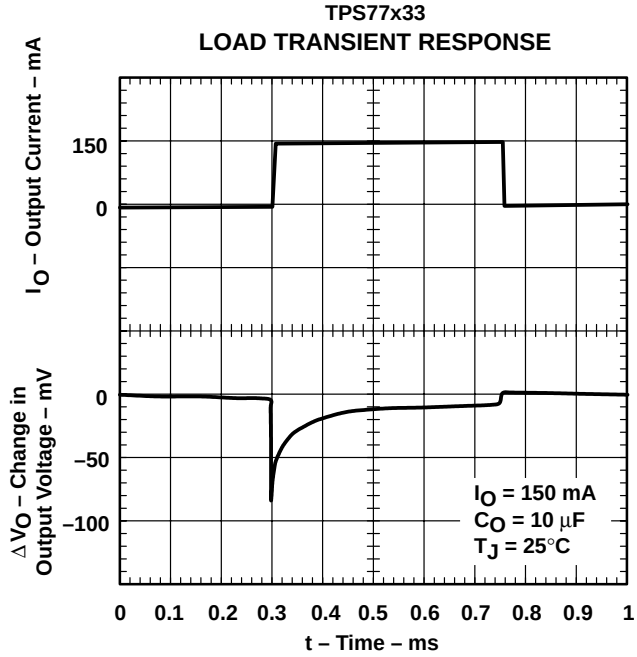

Figure 15

TYPICAL CHARACTERISTICS

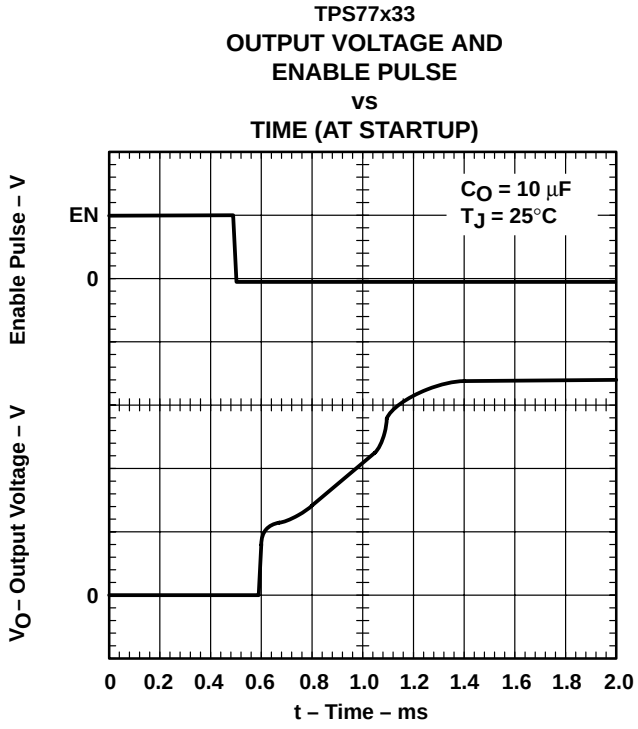

Figure 16

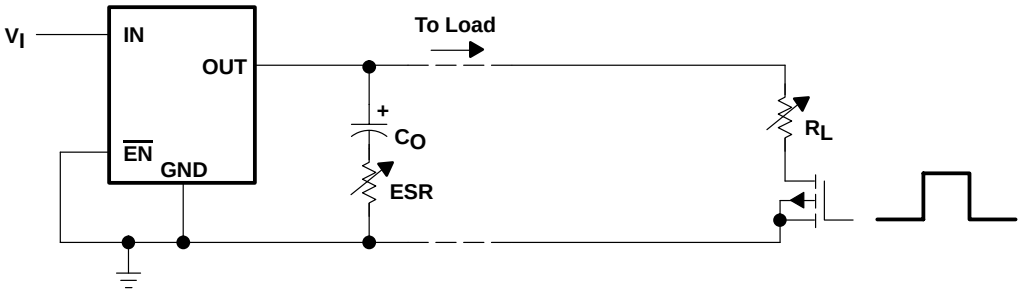

Figure 17. Test Circuit for Typical Regions of Stability (Figures 18 through 21) (Fixed Output Options)

TYPICAL CHARACTERISTICS

TYPICAL REGION OF STABILITY
EQUIVALENT SERIES RESISTANCE†
vs
OUTPUT CURRENT

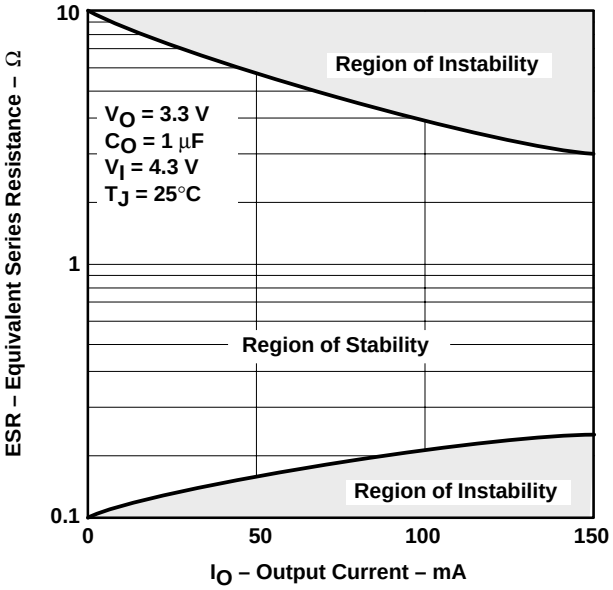

Figure 18

TYPICAL REGION OF STABILITY
EQUIVALENT SERIES RESISTANCE†
vs
OUTPUT CURRENT

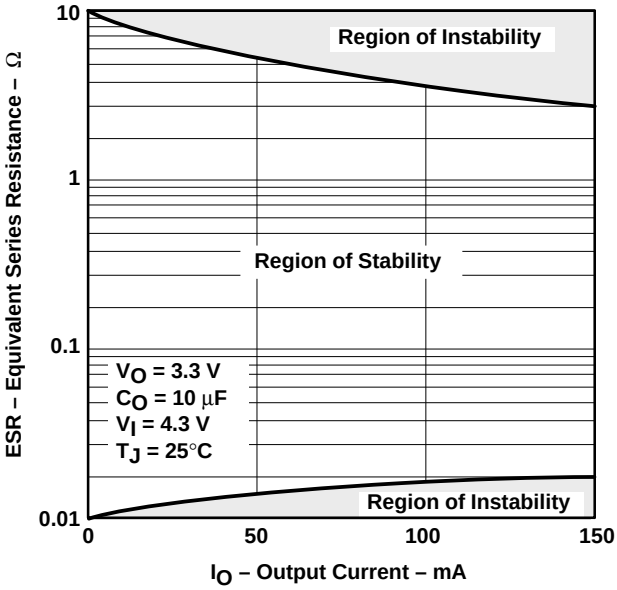

Figure 19

TYPICAL REGION OF STABILITY
EQUIVALENT SERIES RESISTANCE†
vs
OUTPUT CURRENT

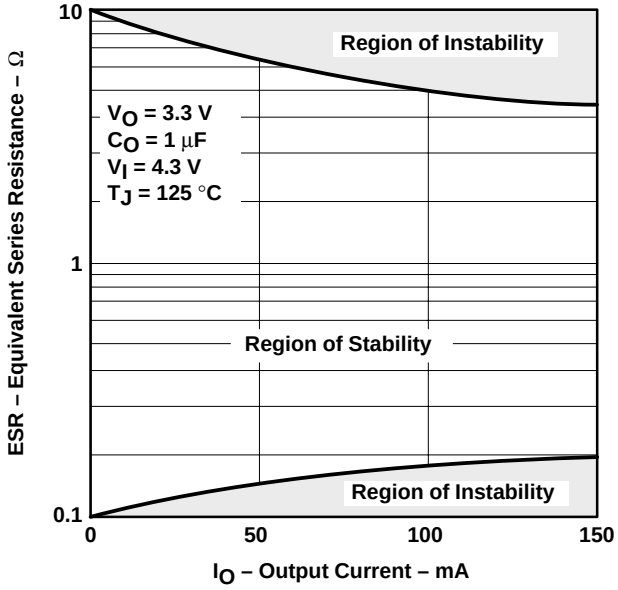

Figure 20

TYPICAL REGION OF STABILITY
EQUIVALENT SERIES RESISTANCE†
vs
OUTPUT CURRENT

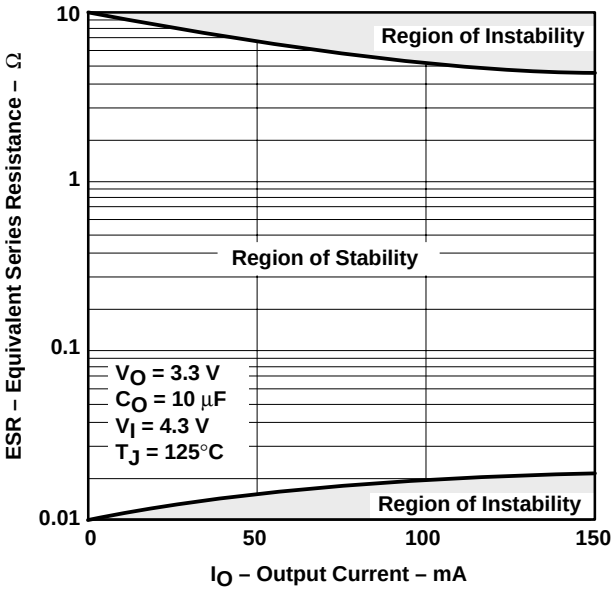

Figure 21

† Equivalent series resistance (ESR) refers to the total series resistance, including the ESR of the capacitor, any series resistance added externally, and PWB trace resistance to C_O.

APPLICATION INFORMATION

pin functions

enable ($\overline{\text{EN}}$)

The $\overline{\text{EN}}$ terminal is an input which enables or shuts down the device. If $\overline{\text{EN}}$ is a logic high, the device will be in shutdown mode. When $\overline{\text{EN}}$ goes to logic low, then the device will be enabled.

power good (PG) (TPS772xx)

The PG terminal is an open drain, active high output that indicates the status of V_{out} (output of the LDO). When V_{out} reaches 82% of the regulated voltage, PG will go to a high-impedance state. It will go to a low-impedance state when V_{out} falls below 82% (i.e. over load condition) of the regulated voltage. The open drain output of the PG terminal requires a pullup resistor.

sense (SENSE)

The SENSE terminal of the fixed-output options must be connected to the regulator output, and the connection should be as short as possible. Internally, SENSE connects to a high-impedance wide-bandwidth amplifier through a resistor-divider network and noise pickup feeds through to the regulator output. It is essential to route the SENSE connection in such a way to minimize/avoid noise pickup. Adding RC networks between the SENSE terminal and V_{out} to filter noise is not recommended because it may cause the regulator to oscillate.

feedback (FB)

FB is an input terminal used for the adjustable-output options and must be connected to an external feedback resistor divider. The FB connection should be as short as possible. It is essential to route it in such a way to minimize/avoid noise pickup. Adding RC networks between FB terminal and V_{out} to filter noise is not recommended because it may cause the regulator to oscillate.

reset ($\overline{\text{RESET}}$) (TPS771xx)

The $\overline{\text{RESET}}$ terminal is an open drain, active low output that indicates the status of V_{out}. When V_{out} reaches 95% of the regulated voltage, $\overline{\text{RESET}}$ will go to a high-impedance state after a 220-ms delay. $\overline{\text{RESET}}$ will go to a low-impedance state when V_{out} is below 95% of the regulated voltage. The open-drain output of the $\overline{\text{RESET}}$ terminal requires a pullup resistor.

APPLICATION INFORMATION

external capacitor requirements

An input capacitor is not usually required; however, a bypass capacitor (0.047 µF or larger) improves load transient response and noise rejection if the TPS771xx or TPS772xx is located more than a few inches from the power supply. A higher-capacitance capacitor may be necessary if large (hundreds of milliamps) load transients with fast rise times are anticipated.

Most low noise LDOs require an external capacitor to further reduce noise. This will impact the cost and board space. The TPS771xx and TPS772xx have very low noise specification requirements without using any external components.

Like all low dropout regulators, the TPS771xx or TPS772xx requires an output capacitor connected between OUT (output of the LDO) and GND (signal ground) to stabilize the internal control loop. The minimum recommended capacitance value is 1 µF provided the ESR meets the requirement in Figures 19 and 21. In addition, a low-ESR capacitor can be used if the capacitance is at least 10 µF and the ESR meets the requirements in Figures 18 and 20. Solid tantalum electrolytic, aluminum electrolytic, and multilayer ceramic capacitors are all suitable, provided they meet the requirements described previously.

Ceramic capacitors have different types of dielectric material with each exhibiting different temperature and voltage variation. The most common types are X5R, X7R, Y5U, Z5U, and NPO. The NPO type ceramic type capacitors are generally the most stable over temperature. However, the X5R and X7R are also relatively stable over temperature (with the X7R being the more stable of the two) and are therefore acceptable to use. The Y5U and Z5U types provide high capacitance in a small geometry, but exhibit large variations over temperature; therefore, the Y5U and Z5U are not generally recommended for use on this LDO. Independent of which type of capacitor is used, one must make certain that at the worst case condition the capacitance/ESR meets the requirement specified in Figures 18 – 21.

APPLICATION INFORMATION

Figure 22 shows the output capacitor and its parasitic impedances in a typical LDO output stage.

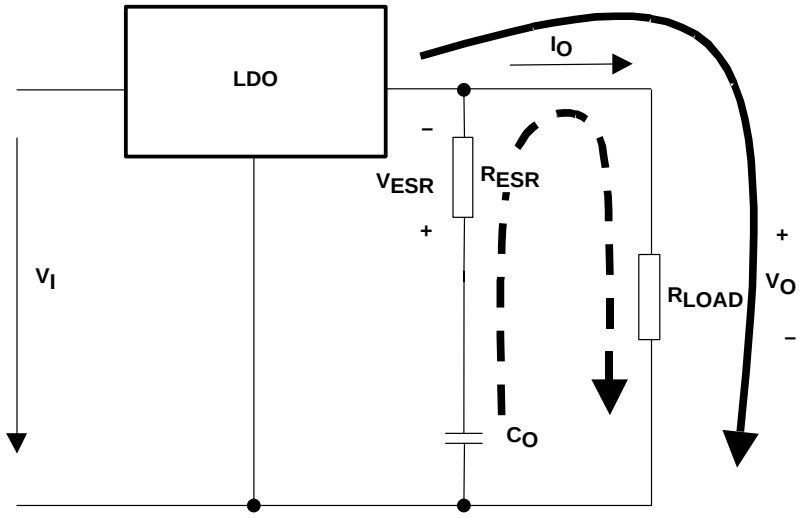

Figure 22. LDO Output Stage With Parasitic Resistances ESR and ESL

In steady state (dc state condition), the load current is supplied by the LDO (solid arrow) and the voltage across the capacitor is the same as the output voltage ($V_{Cout} = V_{out}$). This means no current is flowing into the C_{out} branch. If I_{out} suddenly increases (transient condition), the following occurs:

- The LDO is not able to supply the sudden current need due to its response time (t_1 in Figure 23). Therefore, capacitor C_{out} provides the current for the new load condition (dashed arrow). C_{out} now acts like a battery with an internal resistance, ESR. Depending on the current demand at the output, a voltage drop will occur at R_{ESR}. This voltage is shown as V_{ESR} in Figure 22.
- When C_{out} is conducting current to the load, initial voltage at the load will be $V_{out} = V_{Cout} – V_{ESR}$. Due to the discharge of C_{out}, the output voltage V_{out} will drop continuously until the response time t_1 of the LDO is reached and the LDO will resume supplying the load. From this point, the output voltage starts rising again until it reaches the regulated voltage. This period is shown as t_2 in Figure 23.

The figure also shows the impact of different ESRs on the output voltage. The left brackets show different levels of ESRs where number 1 displays the lowest and number 3 displays the highest ESR.

From above, the following conclusions can be drawn:

- The higher the ESR, the larger the droop at the beginning of load transient.
- The smaller the output capacitor, the faster the discharge time and the bigger the voltage droop during the LDO response period.

APPLICATION INFORMATION

conclusion

To minimize the transient output droop, capacitors must have a low ESR and be large enough to support the minimum output voltage requirement.

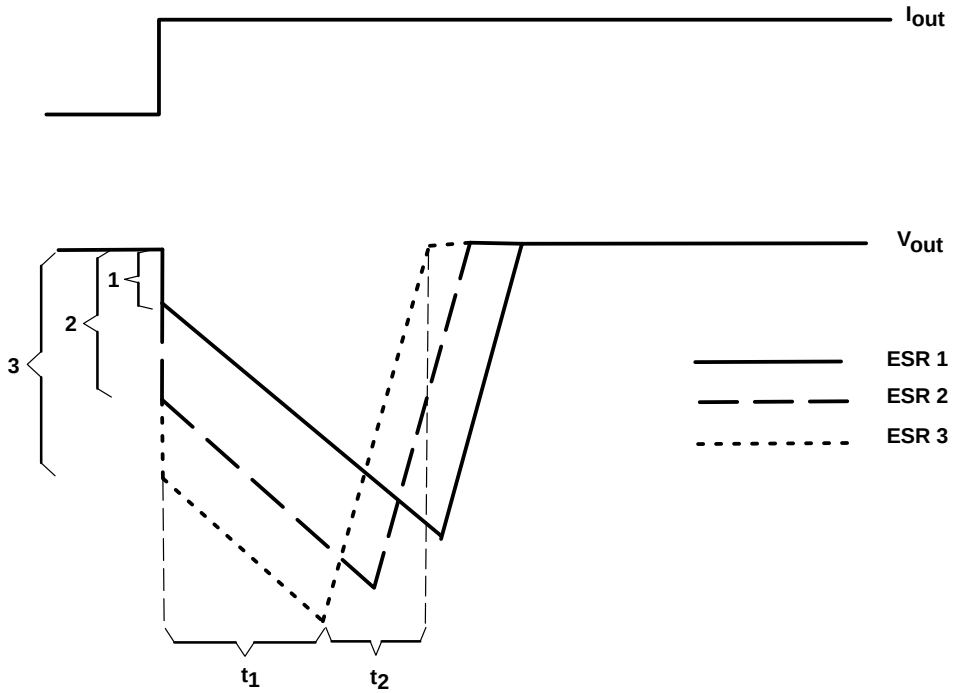

Figure 23. Correlation of Different ESRs and Their Influence to the Regulation of V_{out} at a Load Step From Low-to-High Output Current

APPLICATION INFORMATION

programming the TPS77x01 adjustable LDO regulator

The output voltage of the TPS77x01 adjustable regulator is programmed using an external resistor divider as shown in Figure 24. The output voltage is calculated using:

$$V_O = V_{ref} \times \left(1 + \frac{R1}{R2}\right) \tag{1}$$

Where:

V_{ref} = 1.1834 V typ (the internal reference voltage)

Resistors R1 and R2 should be chosen for approximately 50-µA divider current. Lower value resistors can be used but offer no inherent advantage and waste more power. Higher values should be avoided, as leakage currents at FB increase the output voltage error. The recommended design procedure is to choose R2 = 30.1 kΩ to set the divider current at 50 µA and then calculate R1 using:

$$R1 = \left(\frac{V_O}{V_{ref}} - 1\right) \times R2 \tag{2}$$

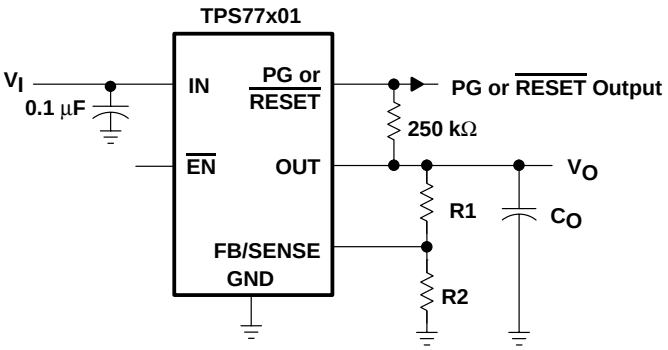

OUTPUT VOLTAGE PROGRAMMING GUIDE

OUTPUT VOLTAGE	R1	R2	UNIT
2.5 V	33.5	30.1	kΩ
3.3 V	53.8	30.1	kΩ
3.6 V	61.5	30.1	kΩ

NOTE: To reduce noise and prevent oscillation, R1 and R2 need to be as close as possible to the FB/SENSE terminal.

Figure 24. TPS77x01 Adjustable LDO Regulator Programming

APPLICATION INFORMATION

regulator protection

The TPS771xx or TPS772xx PMOS-pass transistor has a built-in back diode that conducts reverse currents when the input voltage drops below the output voltage (e.g., during power down). Current is conducted from the output to the input and is not internally limited. When extended reverse voltage is anticipated, external limiting may be appropriate.

The TPS771xx or TPS772xx also features internal current limiting and thermal protection. During normal operation, the TPS771xx or TPS772xx limits output current to approximately 0.9 A. When current limiting engages, the output voltage scales back linearly until the overcurrent condition ends. While current limiting is designed to prevent gross device failure, care should be taken not to exceed the power dissipation ratings of the package. If the temperature of the device exceeds 150°C(typ), thermal-protection circuitry shuts it down. Once the device has cooled below 130°C(typ), regulator operation resumes.

power dissipation and junction temperature

Specified regulator operation is assured to a junction temperature of 125°C; the maximum junction temperature should be restricted to 125°C under normal operating conditions. This restriction limits the power dissipation the regulator can handle in any given application. To ensure the junction temperature is within acceptable limits, calculate the maximum allowable dissipation, $P_{D(max)}$, and the actual dissipation, P_D, which must be less than or equal to $P_{D(max)}$.

The maximum-power-dissipation limit is determined using the following equation:

$$P_{D(max)} = \frac{T_J max - T_A}{R_{\theta JA}}$$

Where:

$T_J max$ is the maximum allowable junction temperature.

$R_{\theta JA}$ is the thermal resistance junction-to-ambient for the package, i.e., 266.2°C/W for the 8-terminal MSOP with no airflow.

T_A is the ambient temperature.

The regulator dissipation is calculated using:

$$P_D = \left(V_I - V_O\right) \times I_O$$

Power dissipation resulting from quiescent current is negligible. Excessive power dissipation will trigger the thermal protection circuit.

PACKAGING INFORMATION

Orderable Device	Status (1)	Package Type	Package Drawing	Pins	Package Qty	Eco Plan (2)	Lead finish/ Ball material (6)	MSL Peak Temp (3)	Op Temp (°C)	Device Marking (4/5)	Samples
TPS77101DGK	ACTIVE	VSSOP	DGK	8	80	RoHS & Green	NIPDAU	Level-1-260C-UNLIM	-40 to 125	AFN	Samples
TPS77101DGKR	ACTIVE	VSSOP	DGK	8	2500	RoHS & Green	NIPDAU	Level-1-260C-UNLIM	-40 to 125	AFN	Samples
TPS77101DGKRG4	ACTIVE	VSSOP	DGK	8	2500	RoHS & Green	NIPDAU	Level-1-260C-UNLIM	-40 to 125	AFN	Samples
TPS77115DGK	ACTIVE	VSSOP	DGK	8	80	RoHS & Green	NIPDAU	Level-1-260C-UNLIM	-40 to 125	AFO	Samples
TPS77115DGKR	ACTIVE	VSSOP	DGK	8	2500	RoHS & Green	NIPDAU	Level-1-260C-UNLIM	-40 to 125	AFO	Samples
TPS77118DGK	ACTIVE	VSSOP	DGK	8	80	RoHS & Green	NIPDAU	Level-1-260C-UNLIM	-40 to 125	AFP	Samples
TPS77128DGK	ACTIVE	VSSOP	DGK	8	80	RoHS & Green	NIPDAU	Level-1-260C-UNLIM	-40 to 125	AFS	Samples
TPS77133DGK	ACTIVE	VSSOP	DGK	8	80	RoHS & Green	NIPDAU | NIPDAUAG	Level-1-260C-UNLIM	-40 to 125	AFU	Samples
TPS77133DGKR	ACTIVE	VSSOP	DGK	8	2500	RoHS & Green	NIPDAU | NIPDAUAG	Level-1-260C-UNLIM	-40 to 125	AFU	Samples
TPS77133DGKRG4	ACTIVE	VSSOP	DGK	8	2500	RoHS & Green	NIPDAU	Level-1-260C-UNLIM	-40 to 125	AFU	Samples
TPS77150DGK	ACTIVE	VSSOP	DGK	8	80	RoHS & Green	NIPDAU	Level-1-260C-UNLIM	-40 to 125	AFV	Samples
TPS77150DGKG4	ACTIVE	VSSOP	DGK	8	80	RoHS & Green	NIPDAU	Level-1-260C-UNLIM	-40 to 125	AFV	Samples
TPS77150DGKR	ACTIVE	VSSOP	DGK	8	2500	RoHS & Green	NIPDAU	Level-1-260C-UNLIM	-40 to 125	AFV	Samples
TPS77201DGK	ACTIVE	VSSOP	DGK	8	80	RoHS & Green	NIPDAU	Level-1-260C-UNLIM	-40 to 125	AFW	Samples
TPS77218DGK	ACTIVE	VSSOP	DGK	8	80	RoHS & Green	NIPDAU	Level-1-260C-UNLIM	-40 to 125	AFY	Samples
TPS77227DGK	ACTIVE	VSSOP	DGK	8	80	RoHS & Green	NIPDAU	Level-1-260C-UNLIM	-40 to 125	AGA	Samples
TPS77233DGK	ACTIVE	VSSOP	DGK	8	80	RoHS & Green	NIPDAU	Level-1-260C-UNLIM	-40 to 125	AGD	Samples
TPS77250DGK	ACTIVE	VSSOP	DGK	8	80	RoHS & Green	NIPDAU	Level-1-260C-UNLIM	-40 to 125	AGE	Samples
TPS77250DGKG4	ACTIVE	VSSOP	DGK	8	80	RoHS & Green	NIPDAU	Level-1-260C-UNLIM	-40 to 125	AGE	Samples

(1) The marketing status values are defined as follows:

ACTIVE: Product device recommended for new designs.
LIFEBUY: TI has announced that the device will be discontinued, and a lifetime-buy period is in effect.
NRND: Not recommended for new designs. Device is in production to support existing customers, but TI does not recommend using this part in a new design.
PREVIEW: Device has been announced but is not in production. Samples may or may not be available.
OBSOLETE: TI has discontinued the production of the device.

(2) **RoHS:** TI defines "RoHS" to mean semiconductor products that are compliant with the current EU RoHS requirements for all 10 RoHS substances, including the requirement that RoHS substance do not exceed 0.1% by weight in homogeneous materials. Where designed to be soldered at high temperatures, "RoHS" products are suitable for use in specified lead-free processes. TI may reference these types of products as "Pb-Free".
RoHS Exempt: TI defines "RoHS Exempt" to mean products that contain lead but are compliant with EU RoHS pursuant to a specific EU RoHS exemption.
Green: TI defines "Green" to mean the content of Chlorine (Cl) and Bromine (Br) based flame retardants meet JS709B low halogen requirements of <=1000ppm threshold. Antimony trioxide based flame retardants must also meet the <=1000ppm threshold requirement.

(3) MSL, Peak Temp. - The Moisture Sensitivity Level rating according to the JEDEC industry standard classifications, and peak solder temperature.

(4) There may be additional marking, which relates to the logo, the lot trace code information, or the environmental category on the device.

(5) Multiple Device Markings will be inside parentheses. Only one Device Marking contained in parentheses and separated by a "~" will appear on a device. If a line is indented then it is a continuation of the previous line and the two combined represent the entire Device Marking for that device.

(6) Lead finish/Ball material - Orderable Devices may have multiple material finish options. Finish options are separated by a vertical ruled line. Lead finish/Ball material values may wrap to two lines if the finish value exceeds the maximum column width.

Important Information and Disclaimer: The information provided on this page represents TI's knowledge and belief as of the date that it is provided. TI bases its knowledge and belief on information provided by third parties, and makes no representation or warranty as to the accuracy of such information. Efforts are underway to better integrate information from third parties. TI has taken and continues to take reasonable steps to provide representative and accurate information but may not have conducted destructive testing or chemical analysis on incoming materials and chemicals. TI and TI suppliers consider certain information to be proprietary, and thus CAS numbers and other limited information may not be available for release.

In no event shall TI's liability arising out of such information exceed the total purchase price of the TI part(s) at issue in this document sold by TI to Customer on an annual basis.

TAPE AND REEL INFORMATION

REEL DIMENSIONS

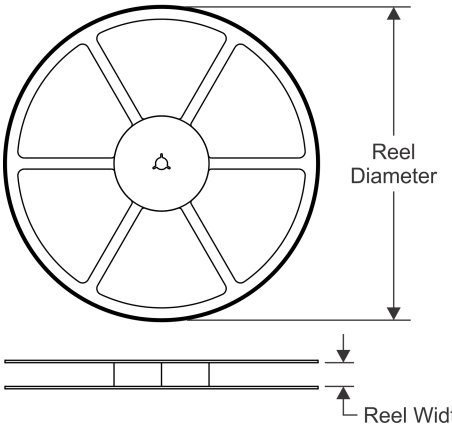

TAPE DIMENSIONS

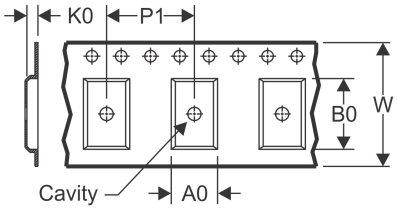

A0	Dimension designed to accommodate the component width
B0	Dimension designed to accommodate the component length
K0	Dimension designed to accommodate the component thickness
W	Overall width of the carrier tape
P1	Pitch between successive cavity centers

QUADRANT ASSIGNMENTS FOR PIN 1 ORIENTATION IN TAPE

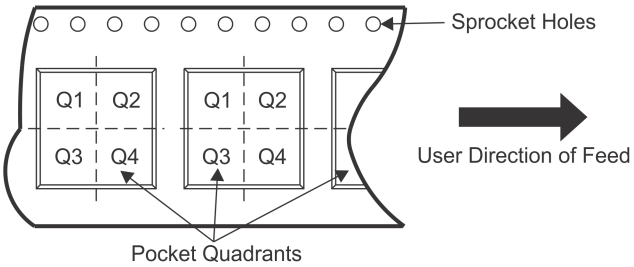

*All dimensions are nominal

Device	Package Type	Package Drawing	Pins	SPQ	Reel Diameter (mm)	Reel Width W1 (mm)	A0 (mm)	B0 (mm)	K0 (mm)	P1 (mm)	W (mm)	Pin1 Quadrant
TPS77101DGKR	VSSOP	DGK	8	2500	330.0	12.4	5.3	3.4	1.4	8.0	12.0	Q1
TPS77115DGKR	VSSOP	DGK	8	2500	330.0	12.4	5.3	3.4	1.4	8.0	12.0	Q1
TPS77133DGKR	VSSOP	DGK	8	2500	330.0	12.4	5.3	3.4	1.4	8.0	12.0	Q1
TPS77150DGKR	VSSOP	DGK	8	2500	330.0	12.4	5.3	3.4	1.4	8.0	12.0	Q1

TAPE AND REEL BOX DIMENSIONS

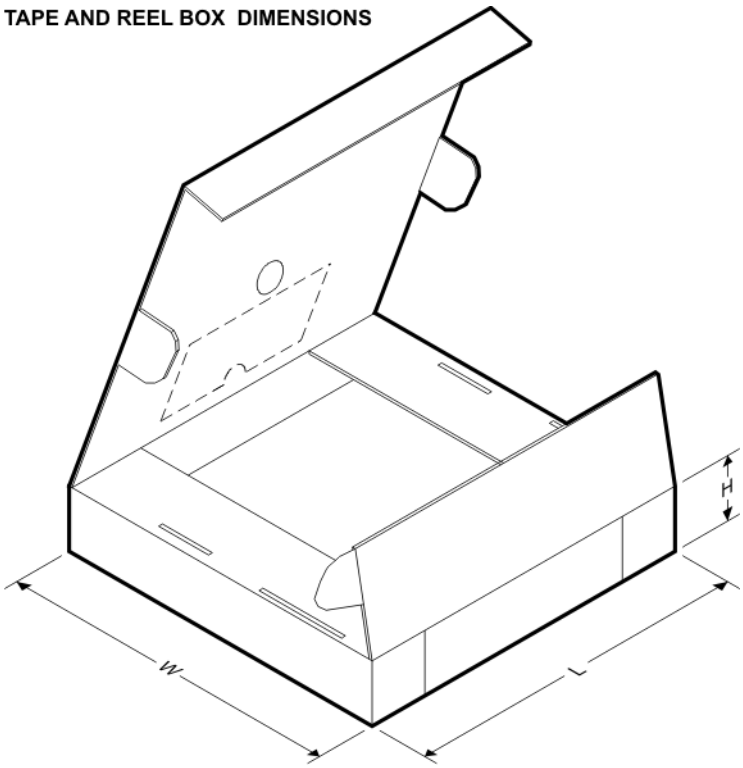

*All dimensions are nominal

Device	Package Type	Package Drawing	Pins	SPQ	Length (mm)	Width (mm)	Height (mm)
TPS77101DGKR	VSSOP	DGK	8	2500	358.0	335.0	35.0
TPS77115DGKR	VSSOP	DGK	8	2500	358.0	335.0	35.0
TPS77133DGKR	VSSOP	DGK	8	2500	358.0	335.0	35.0
TPS77150DGKR	VSSOP	DGK	8	2500	358.0	335.0	35.0

IMPORTANT NOTICE AND DISCLAIMER

TI PROVIDES TECHNICAL AND RELIABILITY DATA (INCLUDING DATASHEETS), DESIGN RESOURCES (INCLUDING REFERENCE DESIGNS), APPLICATION OR OTHER DESIGN ADVICE, WEB TOOLS, SAFETY INFORMATION, AND OTHER RESOURCES “AS IS” AND WITH ALL FAULTS, AND DISCLAIMS ALL WARRANTIES, EXPRESS AND IMPLIED, INCLUDING WITHOUT LIMITATION ANY IMPLIED WARRANTIES OF MERCHANTABILITY, FITNESS FOR A PARTICULAR PURPOSE OR NON-INFRINGEMENT OF THIRD PARTY INTELLECTUAL PROPERTY RIGHTS.

These resources are intended for skilled developers designing with TI products. You are solely responsible for (1) selecting the appropriate TI products for your application, (2) designing, validating and testing your application, and (3) ensuring your application meets applicable standards, and any other safety, security, or other requirements. These resources are subject to change without notice. TI grants you permission to use these resources only for development of an application that uses the TI products described in the resource. Other reproduction and display of these resources is prohibited. No license is granted to any other TI intellectual property right or to any third party intellectual property right. TI disclaims responsibility for, and you will fully indemnify TI and its representatives against, any claims, damages, costs, losses, and liabilities arising out of your use of these resources.

TI’s products are provided subject to TI’s Terms of Sale (https:www.ti.com/legal/termsofsale.html) or other applicable terms available either on ti.com or provided in conjunction with such TI products. TI’s provision of these resources does not expand or otherwise alter TI’s applicable warranties or warranty disclaimers for TI products.

Mailing Address: Texas Instruments, Post Office Box 655303, Dallas, Texas 75265
Copyright © 2021, Texas Instruments Incorporated