INA21x 电压输出、低侧或高侧测量、双向、零漂移系列分流监控器

1 特性

- 宽共模电压范围：-0.3V 至 26 V
- 偏移电压：±35µV（最大值，INA210）（可实现低至 10mV 满量程的分流压降）
- 精度：
  - 增益误差（最大过热误差）：
    - ±0.5%（版本 C）
    - ±1%（版本 A 和 B）
  - 0.5µV/°C 偏移漂移（最大值）
  - 10ppm/°C 增益漂移（最大值）
- 增益选择：
  - INA210：200 V/V
  - INA211：500 V/V
  - INA212：1000 V/V
  - INA213：50 V/V
  - INA214：100 V/V
  - INA215：75 V/V
- 静态电流：100µA（最大值）
- SC70 和薄型 UQFN 封装：所有型号

2 应用

- 笔记本电脑
- 手机
- 电信设备
- 电源管理
- 电池充电器

3 说明

INA21x 为电压输出、分流监控器（也称作电流感测放大器）。该器件通常可针对系统优化提供过流保护和精密电流测量，还常用于闭环反馈电路。该系列器件可感测分流电阻在 –0.3V 至 26V 共模电压范围内的压降，与电源电压无关。共有 6 种固定增益可供选用：50V/V、75V/V、100V/V、200V/V、500V/V 或 1000V/V。该系列器件采用零漂移架构，偏移较低，因此在进行电流感测时能够将分流电阻两端的最大压降保持在 10mV 满量程以下。

该系列器件可由电压为 2.7V 至 26V 的单电源供电，最大电源流耗为 100µA。所有器件版本均在 -40°C 至 +125°C 的扩展运行温度范围内额定运行，采用 SC70 和 UQFN 封装。

器件信息(1)

器件型号	封装	封装尺寸（标称值）
INA21x	SC70 (6)	2.00mm × 1.25mm
	UQFN (10)	1.80mm x 1.40mm

(1) 要了解所有可用封装，请参见数据表末尾的可订购产品附录。

简化电路原理图

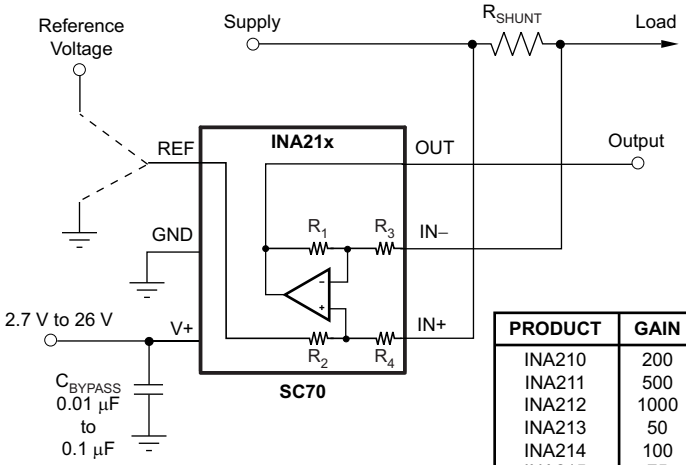

PRODUCT	GAIN	R_3 and R_4	R_1 and R_2
INA210	200	5 kΩ	1 MΩ
INA211	500	2 kΩ	1 MΩ
INA212	1000	1 kΩ	1 MΩ
INA213	50	20 kΩ	1 MΩ
INA214	100	10 kΩ	1 MΩ
INA215	75	13.3 kΩ	1 MΩ

$V_{OUT} = (I_{LOAD} \times R_{SHUNT})$ Gain + V_{REF}

Copyright © 2017, Texas Instruments Incorporated

An IMPORTANT NOTICE at the end of this data sheet addresses availability, warranty, changes, use in safety-critical applications, intellectual property matters and other important disclaimers. PRODUCTION DATA.

目录

1 特性 ... 1
2 应用 ... 1
3 说明 ... 1
4 修订历史记录 ... 2
5 **Pin Configurations and Functions** ... 5
6 **Specifications** ... 6
6.1 Absolute Maximum Ratings ... 6
6.2 ESD Ratings ... 6
6.3 Recommended Operating Conditions ... 6
6.4 Thermal Information ... 7
6.5 Electrical Characteristics ... 8
6.6 Typical Characteristics ... 10
7 **Detailed Description** ... 14
7.1 Overview ... 14
7.2 Functional Block Diagram ... 14
7.3 Feature Description ... 15
7.4 Device Functional Modes ... 16
8 **Application and Implementation** ... 22
8.1 Application Information ... 22
8.2 Typical Applications ... 22
9 **Power Supply Recommendations** ... 25
10 **Layout** ... 25
10.1 Layout Guidelines ... 25
10.2 Layout Example ... 26
11 器件和文档支持 ... 27
11.1 文档支持 ... 27
11.2 相关链接 ... 27
11.3 接收文档更新通知 ... 27
11.4 社区资源 ... 27
11.5 商标 ... 27
11.6 静电放电警告 ... 27
11.7 Glossary ... 27
12 机械、封装和可订购信息 ... 28

4 修订历史记录

注：之前版本的页码可能与当前版本有所不同。

Changes from Revision I (September 2016) to Revision J — **Page**

- 已添加 2017 Copyright® 至首页图片 ... 1
- Deleted *Device Options* table ... 5
- Added Common-mode analog inputs (Versions B and C) to *Absolute Maximum Ratings* table ... 6
- Changed HBM ESD value (Version A) from 4000 to 2000 V in *ESD Ratings* table ... 6
- Changed formatting of *Thermal Information* table note ... 7
- 已删除 *相关文档*部分 ... 27

Changes from Revision H (June 2016) to Revision I — **Page**

- 通篇删除了关于预览器件的注释；所有器件现均正在供货 ... 1

Changes from Revision G (July 2014) to Revision H — **Page**

- 已更改 特性 部分：已删除最后一项要点，已更改封装要点 ... 1
- 已删除最后一项*应用*要点 ... 1
- 已更改*说明*部分 ... 1
- 已更改*器件信息表* ... 1
- Moved storage temperature to *Absolute Maximum Ratings* table ... 6
- Changed *ESD Ratings* table: changed title, changed format to current standards ... 6
- Deleted both *Machine Model* rows from *ESD Ratings* table ... 6
- Changed first sentence referencing 公式 1 in *Input Filtering* section: replaced *seen* with *measured* ... 16
- Changed second sentence referencing 公式 1 in *Input Filtering* section ... 17
- Corrected punctuation and added clarity to first and second paragraphs in *Shutting Down the INA21x Series* section ... 18
- Changed *impressed* to *present* in fourth paragraph of *Shutting Down the INA21x Series* section ... 18

版权 © 2008–2017, Texas Instruments Incorporated

Changes from Revision F (June 2014) to Revision G — **Page**

- 已更改简化原理图：在增益表下添加了公式 1
- Changed $V_{(ESD)}$ *HBM* specifications for version A in Handling Ratings table 6

Changes from Revision E (June 2013) to Revision F — **Page**

- 已更改格式以符合最新的数据表标准；已添加“引脚功能”、“建议运行条件”和“热性能信息”表，*概述*，*功能框图*，*应用信息*，*电源相关建议*以及*布局*部分，移动了现有部分 1
- 已添加 INA215 至文档 1
- 已添加 INA215 分项至第 4 个 特性 要点 1
- 已添加 INA215 至简化原理图表 1
- Added Thermal Information table 6
- Added INA215 to 图 7 10
- Added INA215 to 图 15 11
- Added INA215 to 图 25 18

Changes from Revision D (November 2012) to Revision E — **Page**

Changes from Revision C (August 2012) to Revision D — **Page**

- Changed Frequency Response, *Bandwidth* parameter in Electrical Characteristics table 6

Changes from Revision B (June 2009) to Revision C — **Page**

- Added silicon version B row to Input, *Common-Mode Input Range* parameter in Electrical Characteristics table 6
- Added silicon version B ESD ratings to Abs Max table 6
- Corrected typo in 图 9 10
- Updated 图 12 10
- 已更改 *Input Filtering* section 16
- 已添加 *Improving Transient Robustness* section 21

Changes from Revision A (June 2008) to Revision B — **Page**

- 已添加 RSW 封装至器件图片 1
- 已添加 UQFN 封装至特性分类等级 1
- 已更新首页图片 1
- Added RSW package pin out drawing 5
- Added footnote 3 to *Electrical Characteristics* table 6
- Added UQFN package information to *Temperature Range* section of *Electrical Characteristics* table 6
- 已更改 图 2 to reflect operating temperature range 10
- 已更改 图 4 to reflect operating temperature range 10
- 已更改 图 6 to reflect operating temperature range 10
- 已更改 图 13 to reflect operating temperature range 11
- 已更改 图 14 to reflect operating temperature range 11
- 已添加 RSW description to the *Basic Connections* section 15
- 已更改 60 μV to 100 μV in last sentence of the *Selecting RS* section 15

版权 © 2008–2017, Texas Instruments Incorporated

Changes from Original (May 2008) to Revision A **Page**

- Deleted first footnote of *Electrical Characteristics* table 6
- 已更改 图 7 10
- 已更改 图 15 11

Copyright © 2008–2017, Texas Instruments Incorporated

5 Pin Configurations and Functions

DCK Package
6-Pin SC70
Top View

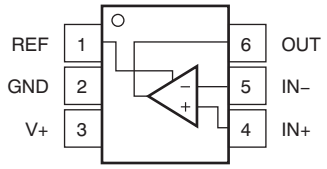

RSW Package
10-Pin Thin UQFN
Top View

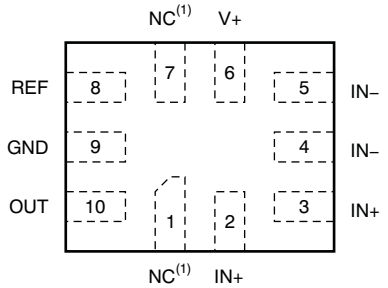

(1) NC denotes no internal connection. These pins can be left floating or connected to any voltage between V– and V+.

Pin Functions

PIN			I/O	DESCRIPTION
NAME	DCK	RSW		
GND	2	9	Analog	Ground
IN–	5	4, 5	Analog input	Connect to load side of shunt resistor
IN+	4	2, 3	Analog input	Connect to supply side of shunt resistor
NC	—	1, 7	—	Not internally connected. Leave floating or connect to ground.
OUT	6	10	Analog output	Output voltage
REF	1	8	Analog input	Reference voltage, 0 V to V+
V+	3	6	Analog	Power supply, 2.7 V to 26 V

Copyright © 2008–2017, Texas Instruments Incorporated

6 Specifications

6.1 Absolute Maximum Ratings

over operating free-air temperature range (unless otherwise noted)[1]

		MIN	MAX	UNIT
Supply voltage, V_S			26	V
Analog inputs, V_{IN+}, V_{IN-}[2]	Differential (V_{IN+}) – (V_{IN-})	–26	26	V
	Common-mode (Version A)[3]	GND – 0.3	26	V
	Common-mode (Version B)[3]	GND – 0.1	26	V
	Common-mode (Version C)[3]	GND – 0.1	26	V
REF input		GND – 0.3	(V_S) + 0.3	V
Output[3]		GND – 0.3	(V_S) + 0.3	V
Input current into any terminal[3]			5	mA
Operating temperature		–55	150	°C
Junction temperature			150	°C
Storage temperature, T_{stg}		–65	150	°C

(1) Stresses beyond those listed under *Absolute Maximum Ratings* may cause permanent damage to the device. These are stress ratings only, which do not imply functional operation of the device at these or any other conditions beyond those indicated under *Recommended Operating Conditions*. Exposure to absolute-maximum-rated conditions for extended periods may affect device reliability.
(2) V_{IN+} and V_{IN-} are the voltages at the IN+ and IN– pins, respectively.
(3) Input voltage at any terminal may exceed the voltage shown if the current at that pin is limited to 5 mA.

6.2 ESD Ratings

			VALUE	UNIT
INA21x, (VERSION A)				
$V_{(ESD)}$	Electrostatic discharge	Human-body model (HBM), per ANSI/ESDA/JEDEC JS-001[1]	±2000	V
		Charged-device model (CDM), per JEDEC specification JESD22-C101[2]	±1000	
INA21x, (VERSIONS B AND C)				
$V_{(ESD)}$	Electrostatic discharge	Human-body model (HBM), per ANSI/ESDA/JEDEC JS-001[1]	±3500	V
		Charged-device model (CDM), per JEDEC specification JESD22-C101[2]	±1000	

(1) JEDEC document JEP155 states that 500-V HBM allows safe manufacturing with a standard ESD control process.
(2) JEDEC document JEP157 states that 250-V CDM allows safe manufacturing with a standard ESD control process.

6.3 Recommended Operating Conditions

over operating free-air temperature range (unless otherwise noted)

		MIN	NOM	MAX	UNIT
V_{CM}	Common-mode input voltage		12		V
V_S	Operating supply voltage		5		V
T_A	Operating free-air temperature	–40		125	°C

Copyright © 2008–2017, Texas Instruments Incorporated

6.4 Thermal Information

THERMAL METRIC[1]		INA21x		UNIT
		DCK (SC70)	RSW (UQFN)	
		6 PINS	10 PINS	
$R_{\theta JA}$	Junction-to-ambient thermal resistance	227.3	107.3	°C/W
$R_{\theta JC(top)}$	Junction-to-case (top) thermal resistance	79.5	56.5	°C/W
$R_{\theta JB}$	Junction-to-board thermal resistance	72.1	18.7	°C/W
ψ_{JT}	Junction-to-top characterization parameter	3.6	1.1	°C/W
ψ_{JB}	Junction-to-board characterization parameter	70.4	18.7	°C/W
$R_{\theta JC(bot)}$	Junction-to-case (bottom) thermal resistance	N/A	N/A	°C/W

(1) For more information about traditional and new thermal metrics, see the *Semiconductor and IC Package Thermal Metrics* application report.

Copyright © 2008–2017, Texas Instruments Incorporated

6.5 Electrical Characteristics

at T_A = 25°C, V_{SENSE} = V_{IN+} – $V_{IN–}$
INA210, INA213, INA214, and INA215: V_S = 5 V, V_{IN+} = 12 V, and V_{REF} = V_S / 2, unless otherwise noted
INA211 and INA212: V_S = 12 V, V_{IN+} = 12 V, and V_{REF} = V_S / 2, unless otherwise noted

PARAMETER			TEST CONDITIONS	MIN	TYP	MAX	UNIT
INPUT							
V_{CM}	Common-mode input range		Version A T_A = –40°C to +125°C	–0.3		26	V
			Versions B and C T_A = –40°C to +125°C	–0.1		26	
CMRR	Common-mode rejection ratio	INA210, INA211, INA212, INA214, INA215	V_{IN+} = 0 V to 26 V V_{SENSE} = 0 mV T_A = –40°C to +125°C	105	140		dB
		INA213	V_{IN+} = 0 V to 26 V V_{SENSE} = 0 mV T_A = –40°C to +125°C	100	120		
V_O	Offset voltage, RTI(1)	INA210, INA211, INA212	V_{SENSE} = 0 mV		±0.55	±35	µV
		INA213	V_{SENSE} = 0 mV		±5	±100	
		INA214, INA215	V_{SENSE} = 0 mV		±1	±60	
dV_{OS}/dT	RTI vs temperature		V_{SENSE} = 0 mV T_A = –40°C to +125°C		0.1	0.5	µV/°C
PSRR	RTI vs power supply ratio		V_S = 2.7 V to 18 V V_{IN+} = 18 V V_{SENSE} = 0 mV		±0.1	±10	µV/V
I_{IB}	Input bias current		V_{SENSE} = 0 mV	15	28	35	µA
I_{IO}	Input offset current		V_{SENSE} = 0 mV		±0.02		µA
OUTPUT							
G	Gain	INA210			200		V/V
		INA211			500		
		INA212			1000		
		INA213			50		
		INA214			100		
		INA215			75		
E_G	Gain error		V_{SENSE} = –5 mV to 5 mV T_A = –40°C to +125°C (Versions A and B)		±0.02%	±1%	
			V_{SENSE} = –5 mV to 5 mV T_A = –40°C to +125°C (Version C)		±0.02%	±0.5%	
	Gain error vs temperature		T_A = –40°C to +125°C		3	10	ppm/°C
	Nonlinearity error		V_{SENSE} = –5 mV to 5 mV		±0.01%		
	Maximum capacitive load		No sustained oscillation		1		nF
VOLTAGE OUTPUT(2)							
	Swing to V+ power-supply rail		R_L = 10 kΩ to GND T_A = –40°C to +125°C		(V+) – 0.05	(V+) – 0.2	V
	Swing to GND		R_L = 10 kΩ to GND T_A = –40°C to +125°C		(V_{GND}) + 0.005	(V_{GND}) + 0.05	V
FREQUENCY RESPONSE							
BW	Bandwidth		C_{LOAD} = 10 pF, INA210		14		kHz
			C_{LOAD} = 10 pF, INA211		7		
			C_{LOAD} = 10 pF, INA212		4		
			C_{LOAD} = 10 pF, INA213		80		
			C_{LOAD} = 10 pF, INA214		30		
			C_{LOAD} = 10 pF, INA215		40		
SR	Slew rate				0.4		V/µs
NOISE, RTI(1)							
	Voltage noise density				25		nV/√Hz

(1) RTI = referred-to-input.
(2) See Typical Characteristic curve, *Output Voltage Swing vs Output Current* (图 10).

Copyright © 2008–2017, Texas Instruments Incorporated

Electrical Characteristics (continued)

at T_A = 25°C, V_{SENSE} = V_{IN+} – $V_{IN–}$
INA210, INA213, INA214, and INA215: V_S = 5 V, V_{IN+} = 12 V, and V_{REF} = V_S / 2, unless otherwise noted
INA211 and INA212: V_S = 12 V, V_{IN+} = 12 V, and V_{REF} = V_S / 2, unless otherwise noted

PARAMETER			TEST CONDITIONS	MIN	TYP	MAX	UNIT
POWER SUPPLY							
V_S	Operating voltage range		T_A = –40°C to +125°C	2.7		26	V
I_Q	Quiescent current		V_{SENSE} = 0 mV		65	100	µA
	I_Q over temperature		T_A = –40°C to +125°C			115	µA
TEMPERATURE RANGE							
	Specified range			–40		125	°C
	Operating range			–55		150	°C
θ_{JA}	Thermal resistance	SC70			250		°C/W
		Thin UQFN			80		°C/W

6.6 Typical Characteristics

The INA210 is used for typical characteristics at T_A = 25°C, V_S = 5 V, V_{IN+} = 12 V, and V_{REF} = V_S / 2, unless otherwise noted.

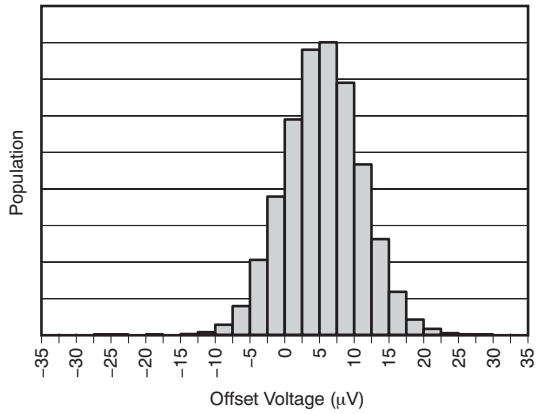

图 1. Input Offset Voltage Production Distribution

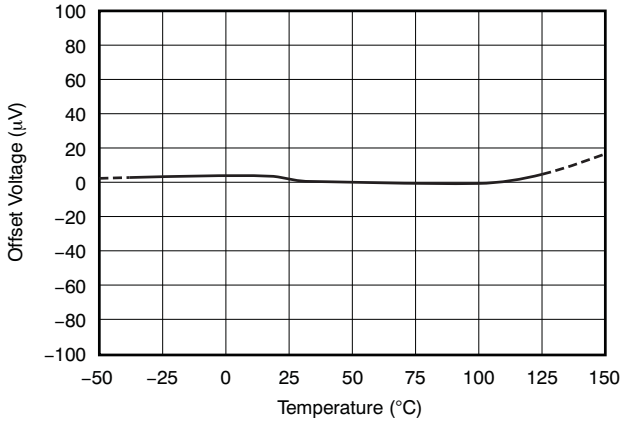

图 2. Offset Voltage vs Temperature

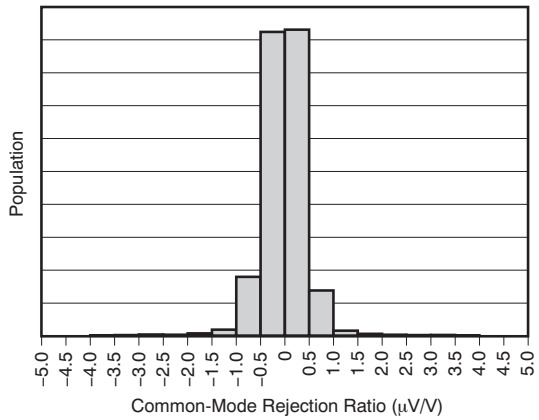

图 3. Common-Mode Rejection Production Distribution

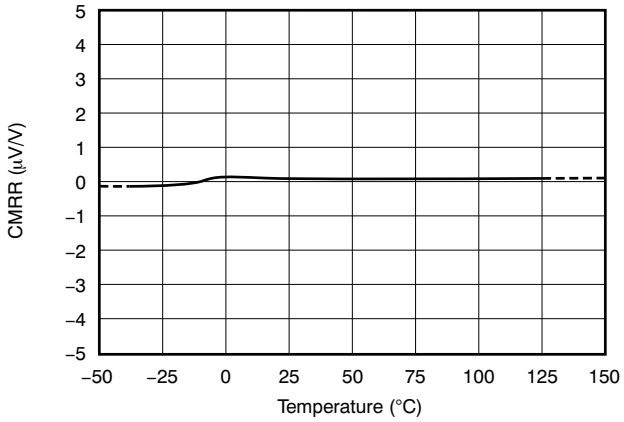

图 4. Common-Mode Rejection Ratio vs Temperature

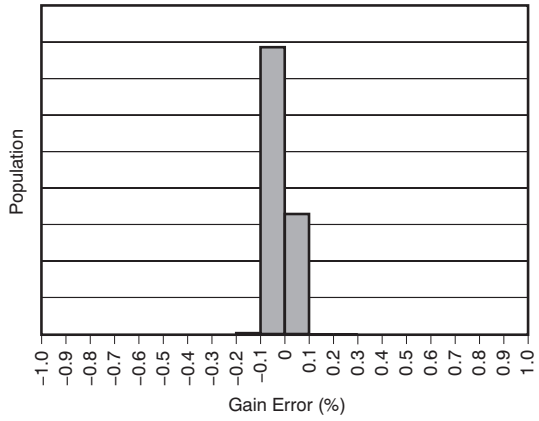

图 5. Gain Error Production Distribution

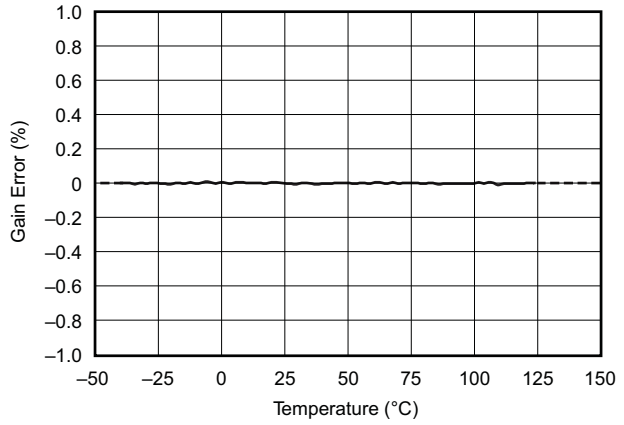

图 6. Gain Error vs Temperature

版权 © 2008–2017, Texas Instruments Incorporated

Typical Characteristics (接下页)

The INA210 is used for typical characteristics at T_A = 25°C, V_S = 5 V, V_{IN+} = 12 V, and V_{REF} = V_S / 2, unless otherwise noted.

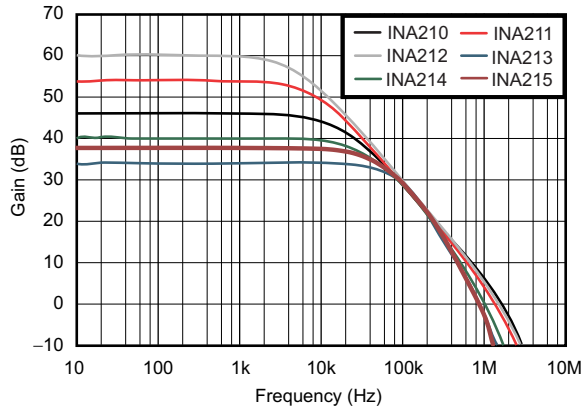

图 7. Gain vs Frequency

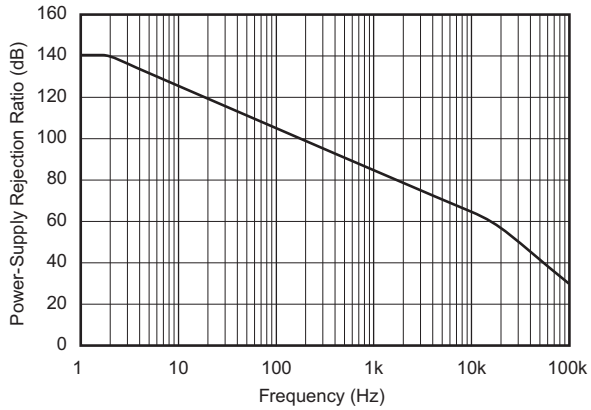

V_S = 5 V + 250-mV sine disturbance

V_{CM} = 0 V　　V_{REF} = 2.5 V　　V_{DIF} = shorted

图 8. Power-Supply Rejection Ratio vs Frequency

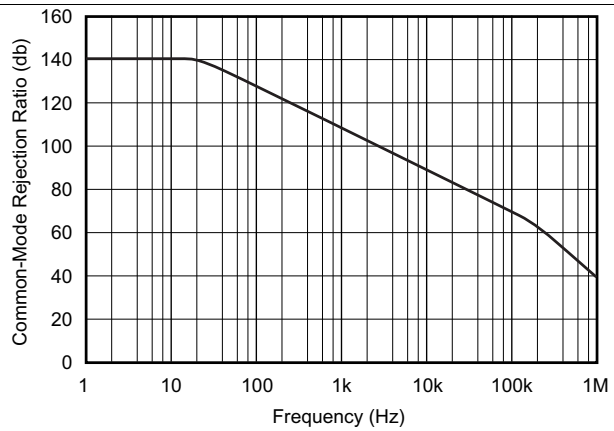

V_S = 5 V　　V_{CM} = 1 V sine　　V_{DIF} = shorted

V_{REF} = 2.5 V

图 9. Common-Mode Rejection Ratio vs Frequency

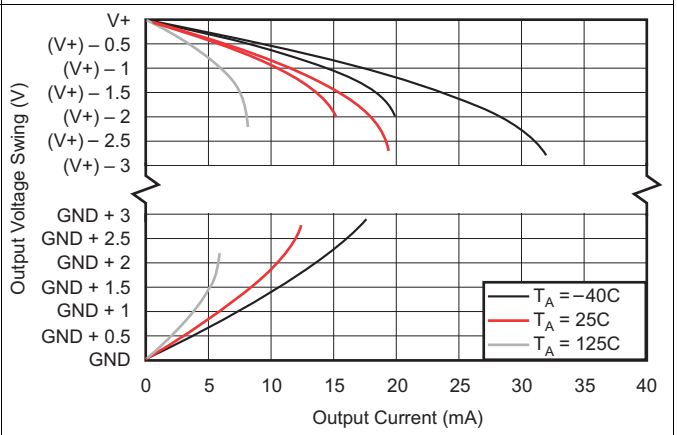

V_S = 2.7 V　　V_S = 2.7 V　　V_S = 5 V to 26 V

V_S = 2.7 V to 26 V

图 10. Output Voltage Swing vs Output Current

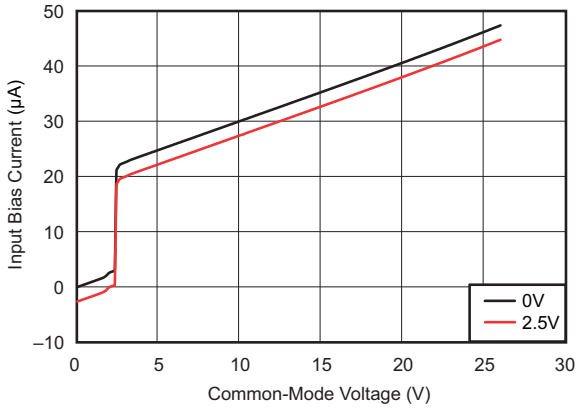

I_{B+}, $I_{B–}$, V_{REF} = 0 V

I_{B+}, $I_{B–}$, V_{REF} = 2.5 V

图 11. Input Bias Current vs Common-Mode Voltage With Supply Voltage = 5 V

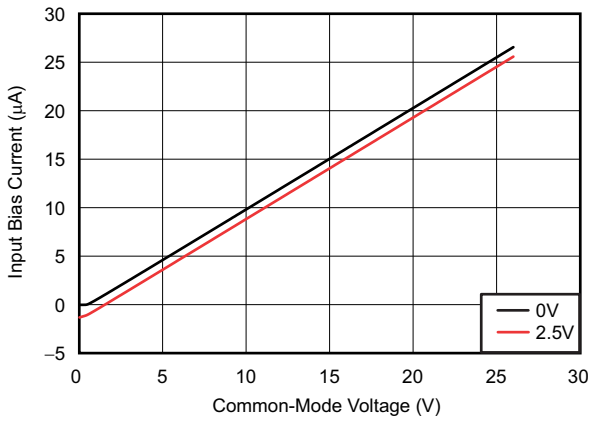

I_{B+}, $I_{B–}$, V_{REF} = 0 V　　I_{B+}, $I_{B–}$, V_{REF} = 2.5 V　　I_{B+}, V_{REF} = 2.5 V

图 12. Input Bias Current vs Common-Mode Voltage With Supply Voltage = 0 V (Shutdown)

Typical Characteristics (接下页)

The INA210 is used for typical characteristics at T_A = 25°C, V_S = 5 V, V_{IN+} = 12 V, and V_{REF} = V_S / 2, unless otherwise noted.

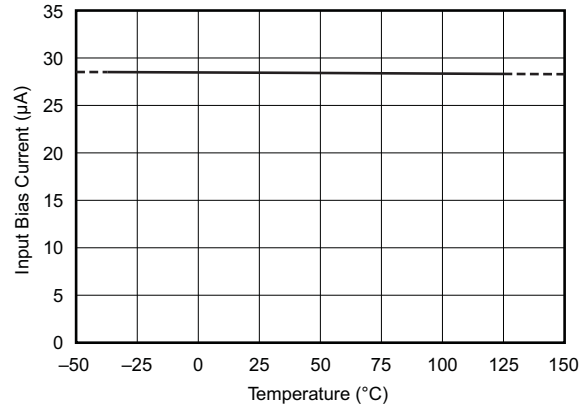

图 13. Input Bias Current vs Temperature

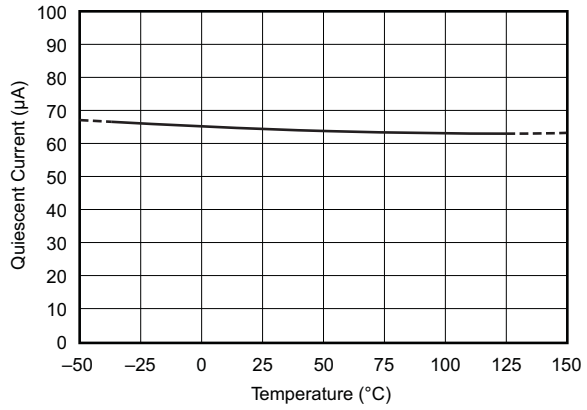

图 14. Quiescent Current vs Temperature

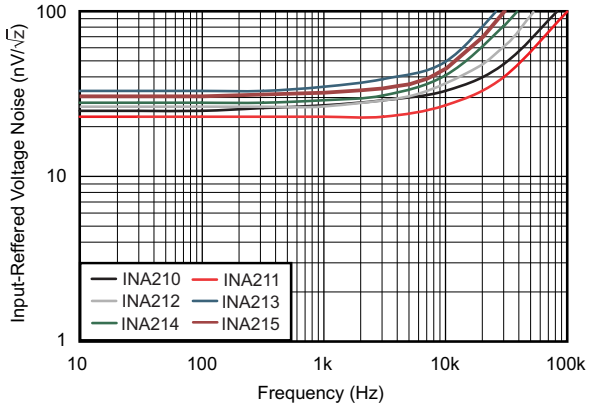

V_S = 2.5 V　　V_{REF} = 0 V　　$V_{IN–}$, V_{IN+} = 0 V

图 15. Input-Referred Voltage Noise vs Frequency

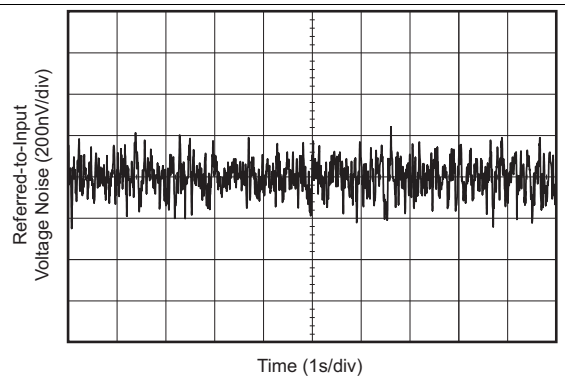

V_S = 2.5 V　　V_{CM} = 0 V　　V_{DIF} = 0 V
V_{REF} = 0 V

图 16. 0.1-Hz to 10-Hz Voltage Noise (Referred-To-Input)

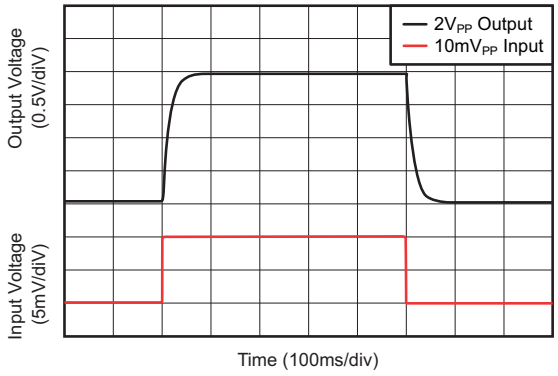

图 17. Step Response (10-mV$_{PP}$ Input Step)

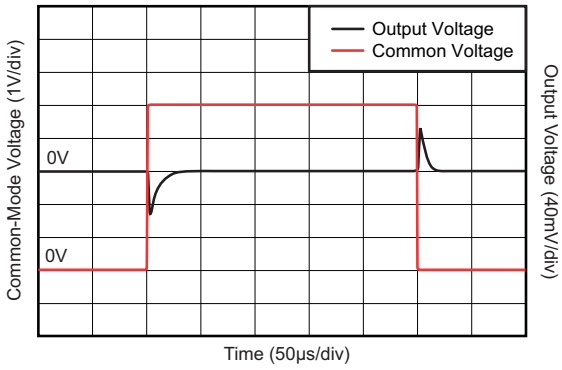

图 18. Common-Mode Voltage Transient Response

版权 © 2008–2017, Texas Instruments Incorporated

Typical Characteristics (接下页)

The INA210 is used for typical characteristics at T_A = 25°C, V_S = 5 V, V_{IN+} = 12 V, and V_{REF} = V_S / 2, unless otherwise noted.

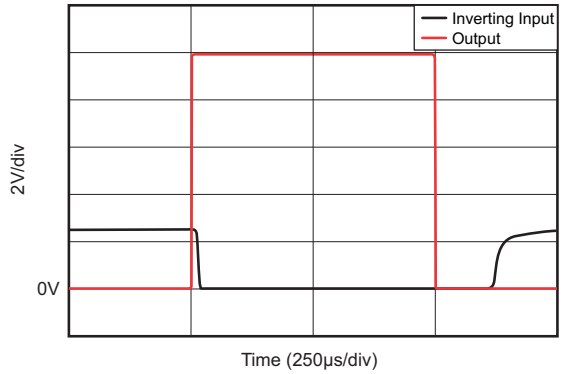

V_S = 5 V V_{CM} = 12 V V_{REF} = 2.5 V

图 19. Inverting Differential Input Overload

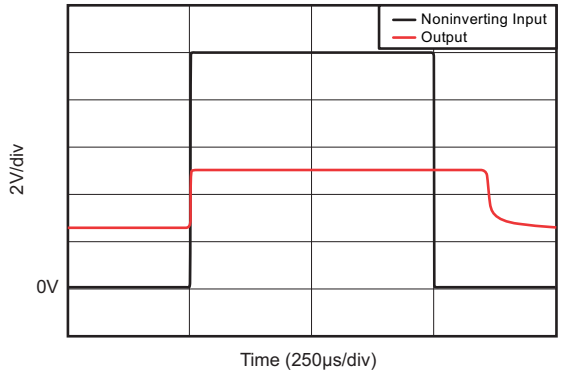

V_S = 5 V V_{CM} = 12 V V_{REF} = 2.5 V

图 20. Noninverting Differential Input Overload

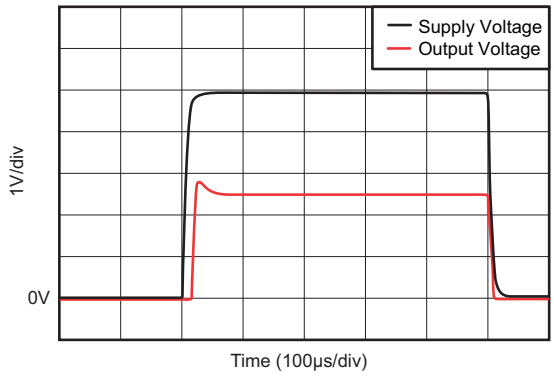

V_S = 5 V 1-kHz step with V_{DIFF} = 0 V V_{REF} = 0 V

图 21. Start-Up Response

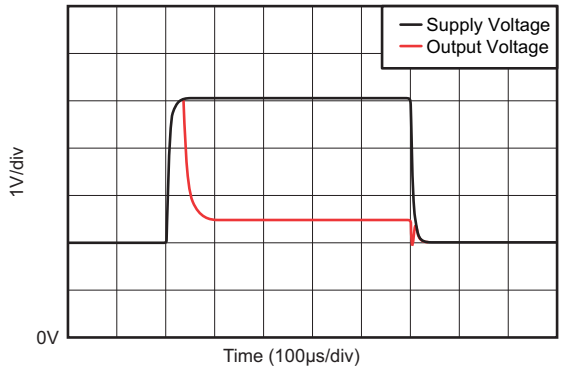

V_S = 5 V 1-kHz step with V_{DIFF} = 0 V V_{REF} = 2.5 V

图 22. Brownout Recovery

7 Detailed Description

7.1 Overview

The INA21x are 26-V, common-mode, zero-drift topology, current-sensing amplifiers that can be used in both low-side and high-side configurations. These specially-designed, current-sensing amplifiers are able to accurately measure voltages developed across current-sensing resistors on common-mode voltages that far exceed the supply voltage powering the device. Current can be measured on input voltage rails as high as 26 V while the device can be powered from supply voltages as low as 2.7 V.

The zero-drift topology enables high-precision measurements with maximum input offset voltages as low as 35 µV with a maximum temperature contribution of 0.5 µV/°C over the full temperature range of –40°C to +125°C.

7.2 Functional Block Diagram

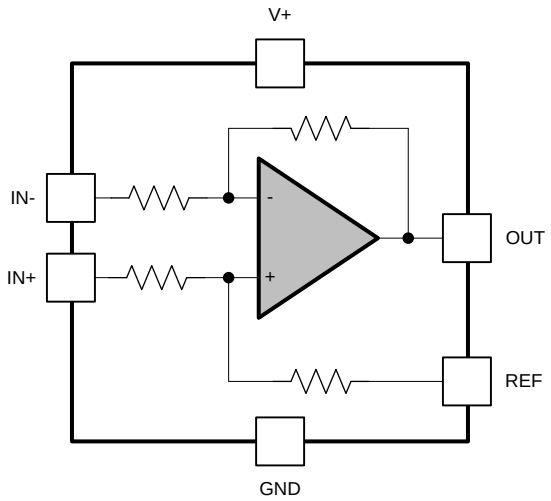

Copyright © 2017, Texas Instruments Incorporated

版权 © 2008–2017, Texas Instruments Incorporated

7.3 Feature Description

7.3.1 Basic Connections

图 23 shows the basic connections of the INA21x. Connect the input pins (IN+ and IN–) as closely as possible to the shunt resistor to minimize any resistance in series with the shunt resistor.

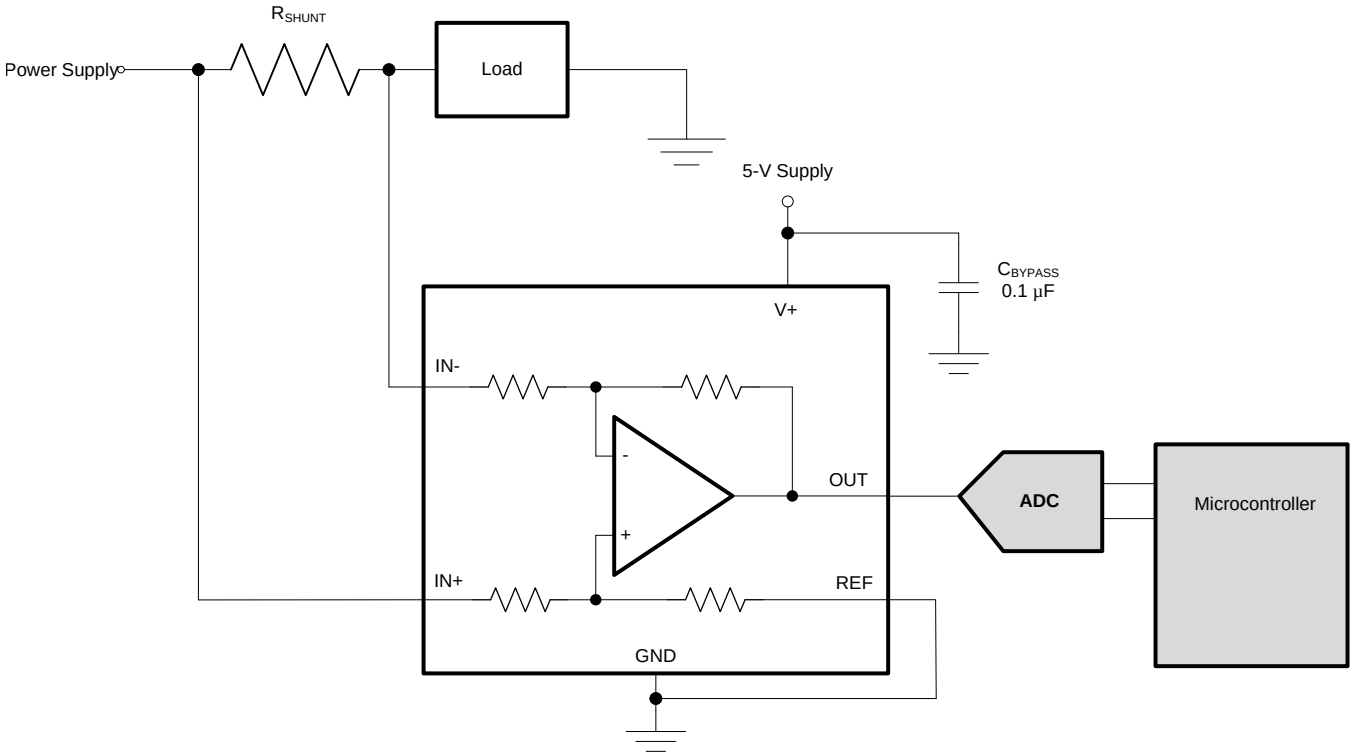

Copyright © 2017, Texas Instruments Incorporated

图 23. Typical Application

Power-supply bypass capacitors are required for stability. Applications with noisy or high-impedance power supplies may require additional decoupling capacitors to reject power-supply noise. Connect bypass capacitors close to the device pins.

On the RSW package options, two pins are provided for each input. Tie these pins together (that is, tie IN+ to IN+ and tie IN– to IN–).

7.3.2 Selecting R_S

The zero-drift offset performance of the INA21x offers several benefits. Most often, the primary advantage of the low offset characteristic enables lower full-scale drops across the shunt. For example, non-zero-drift current shunt monitors typically require a full-scale range of 100 mV.

The INA21x series gives equivalent accuracy at a full-scale range on the order of 10 mV. This accuracy reduces shunt dissipation by an order of magnitude with many additional benefits.

Alternatively, there are applications that must measure current over a wide dynamic range that can take advantage of the low offset on the low end of the measurement. Most often, these applications can use the lower gains of the INA213, INA214, or INA215 to accommodate larger shunt drops on the upper end of the scale. For instance, an INA213 operating on a 3.3-V supply can easily handle a full-scale shunt drop of 60 mV, with only 100 µV of offset.

7.4 Device Functional Modes

7.4.1 Input Filtering

An obvious and straightforward filtering location is at the device output. However, this location negates the advantage of the low output impedance of the internal buffer. The only other filtering option is at the device input pins. This location, though, does require consideration of the ±30% tolerance of the internal resistances. 图 24 shows a filter placed at the inputs pins.

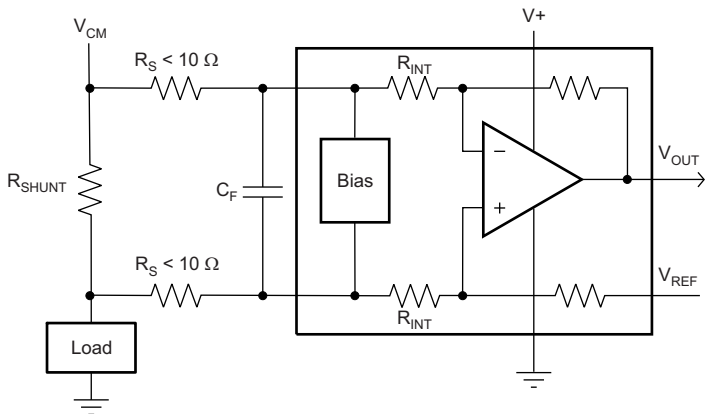

图 24. Filter at Input Pins

The addition of external series resistance, however, creates an additional error in the measurement so the value of these series resistors must be kept to 10 Ω (or less, if possible) to reduce impact to accuracy. The internal bias network shown in 图 24 present at the input pins creates a mismatch in input bias currents when a differential voltage is applied between the input pins. If additional external series filter resistors are added to the circuit, the mismatch in bias currents results in a mismatch of voltage drops across the filter resistors. This mismatch creates a differential error voltage that subtracts from the voltage developed at the shunt resistor. This error results in a voltage at the device input pins that is different than the voltage developed across the shunt resistor. Without the additional series resistance, the mismatch in input bias currents has little effect on device operation. The amount of error these external filter resistors add to the measurement can be calculated using 公式 2 where the gain error factor is calculated using 公式 1.

The amount of variance in the differential voltage present at the device input relative to the voltage developed at the shunt resistor is based both on the external series resistance value as well as the internal input resistors, R3 and R4 (or R_{INT} as shown in 图 24). The reduction of the shunt voltage reaching the device input pins appears as a gain error when comparing the output voltage relative to the voltage across the shunt resistor. A factor can be calculated to determine the amount of gain error that is introduced by the addition of external series resistance. The equation used to calculate the expected deviation from the shunt voltage to what is measured at the device input pins is given in 公式 1:

$$\text{Gain Error Factor} = \frac{(1250 \times R_{INT})}{(1250 \times R_S) + (1250 \times R_{INT}) + (R_S \times R_{INT})}$$

where:

- R_{INT} is the internal input resistor (R3 and R4), and
- R_S is the external series resistance. (1)

版权 © 2008–2017, Texas Instruments Incorporated

Device Functional Modes (接下页)

With the adjustment factor from 公式 1, including the device internal input resistance, this factor varies with each gain version, as shown in 表 1. Each individual device gain error factor is shown in 表 2.

表 1. Input Resistance

PRODUCT	GAIN	R_{INT} (kΩ)
INA210	200	5
INA211	500	2
INA212	1000	1
INA213	50	20
INA214	100	10
INA215	75	13.3

表 2. Device Gain Error Factor

PRODUCT	SIMPLIFIED GAIN ERROR FACTOR
INA210	$\frac{1000}{R_S + 1000}$
INA211	$\frac{10{,}000}{(13 \times R_S) + 10{,}000}$
INA212	$\frac{5000}{(9 \times R_S) + 5000}$
INA213	$\frac{20{,}000}{(17 \times R_S) + 20{,}000}$
INA214	$\frac{10{,}000}{(9 \times R_S) + 10{,}000}$
INA215	$\frac{8{,}000}{(7 \times R_S) + 8{,}000}$

The gain error that can be expected from the addition of the external series resistors can then be calculated based on 公式 2:

$$\text{Gain Error (\%)} = 100 - (100 \times \text{Gain Error Factor}) \quad (2)$$

For example, using an INA212 and the corresponding gain error equation from 表 2, a series resistance of 10 Ω results in a gain error factor of 0.982. The corresponding gain error is then calculated using 公式 2, resulting in a gain error of approximately 1.77% solely because of the external 10-Ω series resistors. Using an INA213 with the same 10-Ω series resistor results in a gain error factor of 0.991 and a gain error of 0.84% again solely because of these external resistors.

7.4.2 Shutting Down the INA21x Series

Although the INA21x series does not have a shutdown pin, the low power consumption of the device allows the output of a logic gate or transistor switch to power the INA21x. This gate or switch turns on and turns off the INA21x power-supply quiescent current.

However, in current shunt monitoring applications, there is also a concern for how much current is drained from the shunt circuit in shutdown conditions. Evaluating this current drain involves considering the simplified schematic of the INA21x in shutdown mode, as shown in 图 25.

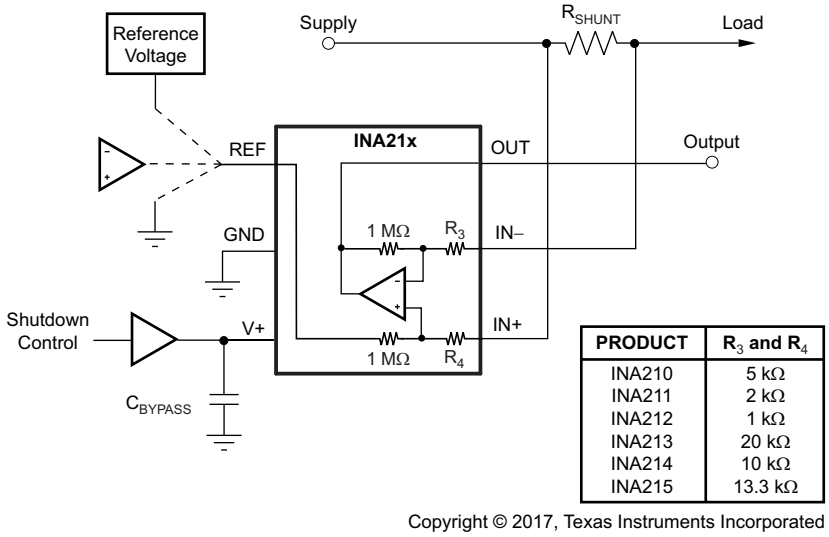

PRODUCT	R_3 and R_4
INA210	5 kΩ
INA211	2 kΩ
INA212	1 kΩ
INA213	20 kΩ
INA214	10 kΩ
INA215	13.3 kΩ

NOTE: 1-MΩ paths from shunt inputs to reference and INA21x outputs.

图 25. Basic Circuit for Shutting Down The INA21x With a Grounded Reference

Note that there is typically slightly more than 1-MΩ impedance (from the combination of 1-MΩ feedback and 5-kΩ input resistors) from each input of the INA21x to the OUT pin and to the REF pin. The amount of current flowing through these pins depends on the respective ultimate connection. For example, if the REF pin is grounded, the calculation of the effect of the 1-MΩ impedance from the shunt to ground is straightforward. However, if the reference or op amp is powered while the INA21x is shut down, the calculation is direct; instead of assuming 1 MΩ to ground, however, assume 1 MΩ to the reference voltage. If the reference or op amp is also shut down, some knowledge of the reference or op amp output impedance under shutdown conditions is required. For instance, if the reference source behaves as an open circuit when not powered, little or no current flows through the 1-MΩ path.

Regarding the 1-MΩ path to the output pin, the output stage of a disabled INA21x does constitute a good path to ground. Consequently, this current is directly proportional to a shunt common-mode voltage present across a 1-MΩ resistor.

As a final note, when the device is powered up, there is an additional, nearly constant, and well-matched 25 μA that flows in each of the inputs as long as the shunt common-mode voltage is 3 V or higher. Below 2-V common-mode, the only current effects are the result of the 1-MΩ resistors.

版权 © 2008–2017, Texas Instruments Incorporated

7.4.3 REF Input Impedance Effects

As with any difference amplifier, the INA21x series common-mode rejection ratio is affected by any impedance present at the REF input. This concern is not a problem when the REF pin is connected directly to most references or power supplies. When using resistive dividers from the power supply or a reference voltage, the REF pin must be buffered by an op amp.

In systems where the INA21x output can be sensed differentially, such as by a differential input analog-to-digital converter (ADC) or by using two separate ADC inputs, the effects of external impedance on the REF input can be cancelled. 图 26 depicts a method of taking the output from the INA21x by using the REF pin as a reference.

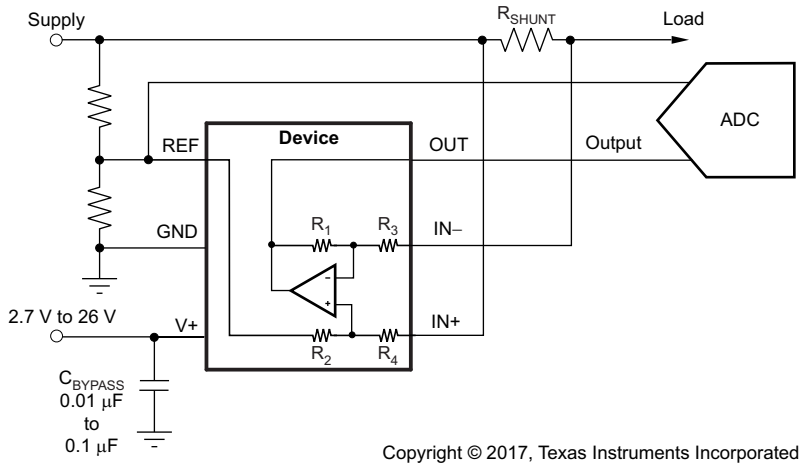

图 26. Sensing the INA21x to Cancel the Effects of Impedance on the REF Input

7.4.4 Using The INA21x With Common-Mode Transients Above 26 V

With a small amount of additional circuitry, the INA21x series can be used in circuits subject to transients higher than 26 V, such as automotive applications. Use only zener diode or zener-type transient absorbers (sometimes referred to as *transzorbs*) ;any other type of transient absorber has an unacceptable time delay. Start by adding a pair of resistors as a working impedance for the zener; see 图 27. Keeping these resistors as small as possible is preferable, typically around 10 Ω. Larger values can be used with an effect on gain that is discussed in the *Input Filtering* section. Because this circuit limits only short-term transients, many applications are satisfied with a 10-Ω resistor along with conventional zener diodes of the lowest power rating that can be found. This combination uses the least amount of board space. These diodes can be found in packages as small as SOT-523 or SOD-523.

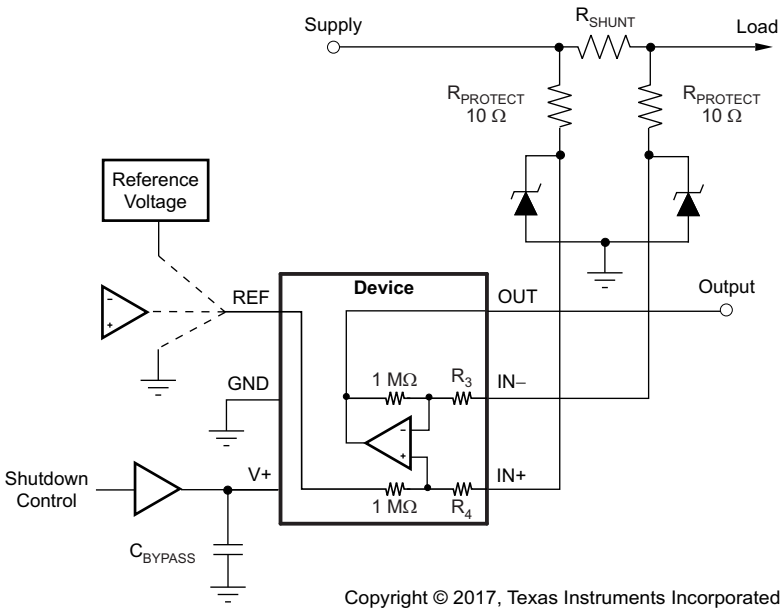

图 27. INA21x Transient Protection Using Dual Zener Diodes

In the event that low-power zeners do not have sufficient transient absorption capability and a higher power transzorb must be used, the most package-efficient solution then involves using a single transzorb and back-to-back diodes between the device inputs. The most space-efficient solutions are dual series-connected diodes in a single SOT-523 or SOD-523 package. This method is shown in 图 28. In either of these examples, the total board area required by the INA21x with all protective components is less than that of an SO-8 package, and only slightly greater than that of an MSOP-8 package.

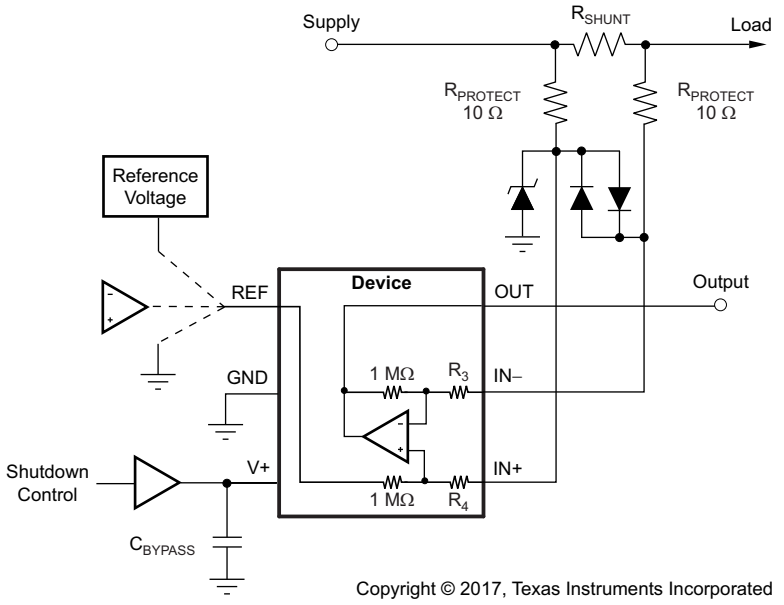

图 28. INA21x Transient Protection Using a Single Transzorb and Input Clamps

版权 © 2008–2017, Texas Instruments Incorporated

7.4.5 Improving Transient Robustness

Applications involving large input transients with excessive dV/dt above 2 kV per microsecond present at the device input pins may cause damage to the internal ESD structures on version A devices. This potential damage is a result of the internal latching of the ESD structure to ground when this transient occurs at the input. With significant current available in most current-sensing applications, the large current flowing through the input transient-triggered, ground-shorted ESD structure quickly results in damage to the silicon. External filtering can be used to attenuate the transient signal prior to reaching the inputs to avoid the latching condition. Care must be taken to ensure that external series input resistance does not significantly impact gain error accuracy. For accuracy purposes, keep these resistances under 10 Ω if possible. Ferrite beads are recommended for this filter because of their inherently low dc ohmic value. Ferrite beads with less than 10 Ω of resistance at dc and over 600 Ω of resistance at 100 MHz to 200 MHz are recommended. The recommended capacitor values for this filter are between 0.01 µF and 0.1 µF to ensure adequate attenuation in the high-frequency region. This protection scheme is shown in 图 29.

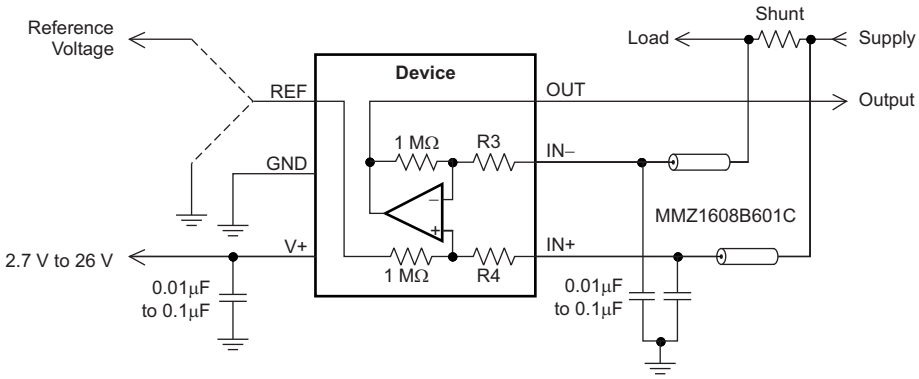

Copyright © 2017, Texas Instruments Incorporated

图 29. Transient Protection

To minimize the cost of adding these external components to protect the device in applications where large transient signals may be present, version B and C devices are now available with new ESD structures that are not susceptible to this latching condition. Version B and C devices are incapable of sustaining these damage-causing latched conditions so these devices do not have the same sensitivity to the transients that the version A devices have, thus making the version B and C devices a better fit for these applications.

8 Application and Implementation

注

Information in the following applications sections is not part of the TI component specification, and TI does not warrant its accuracy or completeness. TI's customers are responsible for determining suitability of components for their purposes. Customers should validate and test their design implementation to confirm system functionality.

8.1 Application Information

The INA21x devices measure the voltage developed across a current-sensing resistor when current passes through the device. The ability to drive the reference pin to adjust the functionality of the output signal offers multiple configurations, as discussed throughout this section.

8.2 Typical Applications

8.2.1 Unidirectional Operation

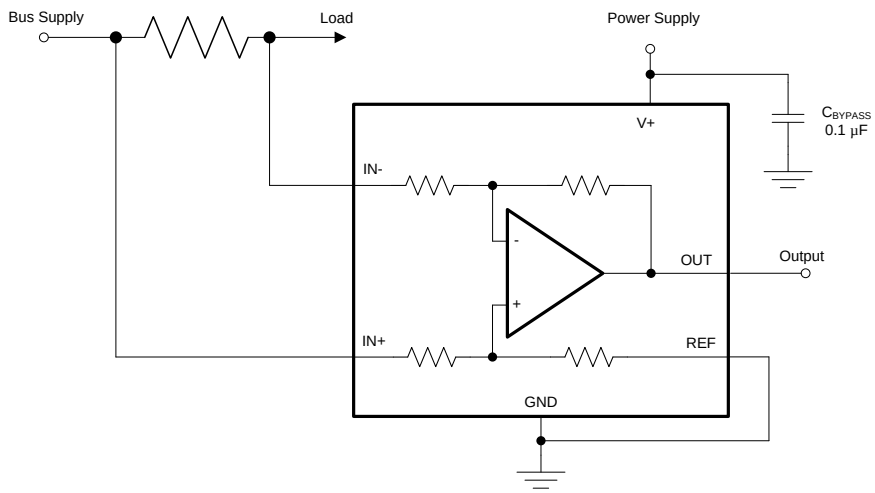

Copyright © 2017, Texas Instruments Incorporated

图 30. Unidirectional Application Schematic

8.2.1.1 Design Requirements

The device can be configured to monitor current flowing in one direction (unidirectional) or in both directions (bidirectional) depending on how the REF pin is configured. The most common case is unidirectional where the output is set to ground when no current is flowing by connecting the REF pin to ground, as shown in 图 30. When the input signal increases, the output voltage at the OUT pin increases.

8.2.1.2 Detailed Design Procedure

The linear range of the output stage is limited in how close the output voltage can approach ground under zero input conditions. In unidirectional applications where measuring very low input currents is desirable, bias the REF pin to a convenient value above 50 mV to get the output into the linear range of the device. To limit common-mode rejection errors, TI recommends buffering the reference voltage connected to the REF pin.

A less frequently-used output biasing method is to connect the REF pin to the supply voltage, V+. This method results in the output voltage saturating at 200 mV below the supply voltage when no differential input signal is present. This method is similar to the output saturated low condition with no input signal when the REF pin is connected to ground. The output voltage in this configuration only responds to negative currents that develop negative differential input voltage relative to the device IN– pin. Under these conditions, when the differential input signal increases negatively, the output voltage moves downward from the saturated supply voltage. The voltage applied to the REF pin must not exceed the device supply voltage.

版权 © 2008–2017, Texas Instruments Incorporated

Typical Applications (接下页)

8.2.1.3 Application Curve

An example output response of a unidirectional configuration is shown in 图 31. With the REF pin connected directly to ground, the output voltage is biased to this zero output level. The output rises above the reference voltage for positive differential input signals but cannot fall below the reference voltage for negative differential input signals because of the grounded reference voltage.

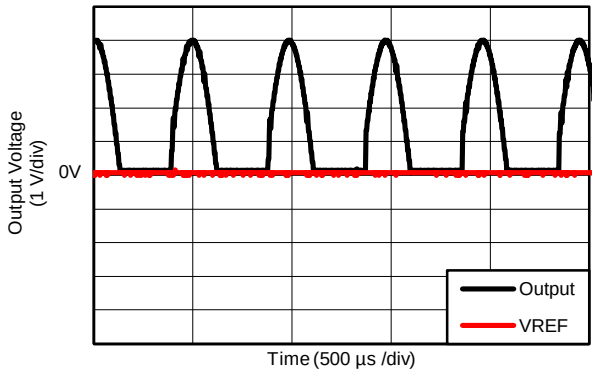

图 31. Unidirectional Application Output Response

Typical Applications (接下页)

8.2.2 Bidirectional Operation

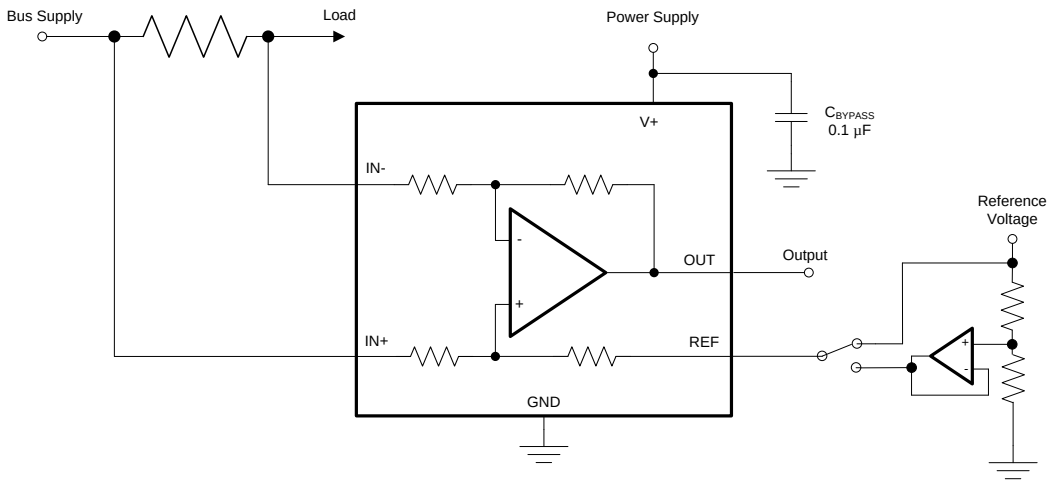

Copyright © 2017, Texas Instruments Incorporated

图 32. Bidirectional Application Schematic

8.2.2.1 Design Requirements

The device is a bidirectional, current-sense amplifier capable of measuring currents through a resistive shunt in two directions. This bidirectional monitoring is common in applications that include charging and discharging operations where the current flow-through resistor can change directions.

8.2.2.2 Detailed Design Procedure

The ability to measure this current flowing in both directions is enabled by applying a voltage to the REF pin, as shown in 图 32. The voltage applied to REF (V_{REF}) sets the output state that corresponds to the zero-input level state. The output then responds by increasing above V_{REF} for positive differential signals (relative to the IN– pin) and responds by decreasing below V_{REF} for negative differential signals. This reference voltage applied to the REF pin can be set anywhere between 0 V to V+. For bidirectional applications, V_{REF} is typically set at midscale for equal signal range in both current directions. In some cases, however, V_{REF} is set at a voltage other than midscale when the bidirectional current and corresponding output signal do not need to be symmetrical.

8.2.2.3 Application Curve

An example output response of a bidirectional configuration is shown in 图 33. With the REF pin connected to a reference voltage (2.5 V in this case) the output voltage is biased upwards by this reference level. The output rises above the reference voltage for positive differential input signals and falls below the reference voltage for negative differential input signals.

版权 © 2008–2017, Texas Instruments Incorporated

Typical Applications (接下页)

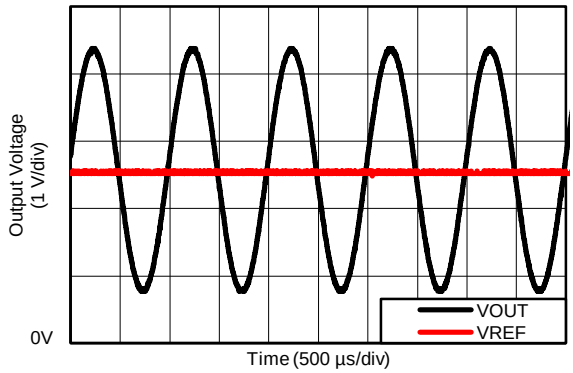

图 33. Bidirectional Application Output Response

9 Power Supply Recommendations

The input circuitry of the INA21x can accurately measure beyond the power-supply voltage, V+. For example, the V+ power supply can be 5 V, whereas the load power-supply voltage can be as high as 26 V. However, the output voltage range of the OUT pin is limited by the voltages on the power-supply pin. Note also that the INA21x can withstand the full input signal range up to 26 V at the input pins, regardless of whether the device has power applied or not.

10 Layout

10.1 Layout Guidelines

- Connect the input pins to the sensing resistor using a Kelvin or 4-wire connection. This connection technique ensures that only the current-sensing resistor impedance is detected between the input pins. Poor routing of the current-sensing resistor commonly results in additional resistance present between the input pins. Given the very low ohmic value of the current resistor, any additional high-current carrying impedance can cause significant measurement errors.
- Place the power-supply bypass capacitor as closely as possible to the supply and ground pins. The recommended value of this bypass capacitor is 0.1 µF. Additional decoupling capacitance can be added to compensate for noisy or high-impedance power supplies.

10.2 Layout Example

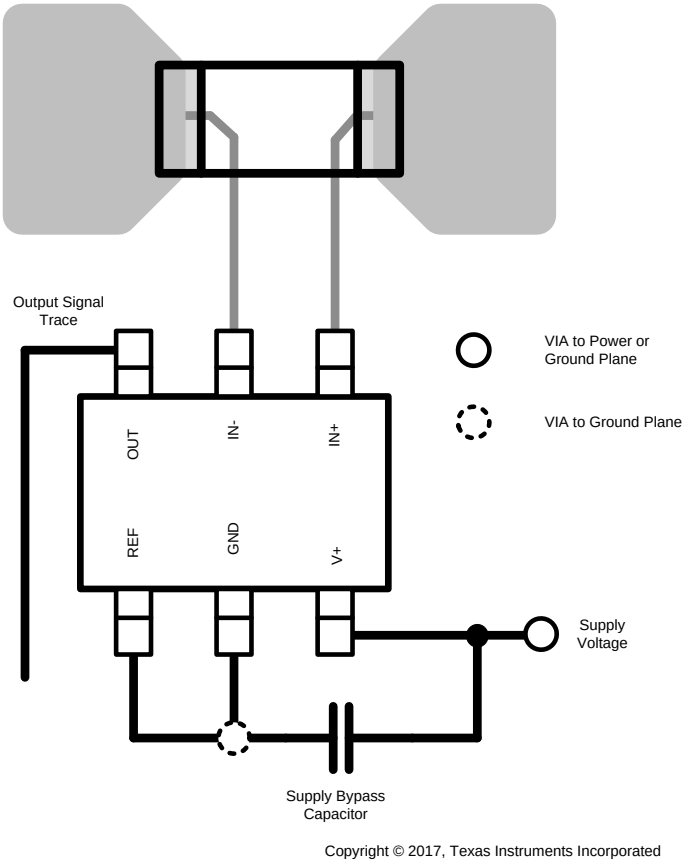

图 34. Recommended Layout

版权 © 2008–2017, Texas Instruments Incorporated

11 器件和文档支持

11.1 文档支持

中文档参考的固定文献编号

11.1.1 相关文档

相关文档如下：

- *《INA210-215EVM 用户指南》*

11.2 相关链接

表 3 列出了快速访问链接。范围包括技术文档、支持与社区资源、工具和软件，并且可以快速访问样片或购买链接。

表 3. 相关链接

器件	产品文件夹	立即订购	技术文档	工具与软件	支持与社区
INA210	请单击此处	请单击此处	请单击此处	请单击此处	请单击此处
INA211	请单击此处	请单击此处	请单击此处	请单击此处	请单击此处
INA212	请单击此处	请单击此处	请单击此处	请单击此处	请单击此处
INA213	请单击此处	请单击此处	请单击此处	请单击此处	请单击此处
INA214	请单击此处	请单击此处	请单击此处	请单击此处	请单击此处
INA215	请单击此处	请单击此处	请单击此处	请单击此处	请单击此处

11.3 接收文档更新通知

如需接收文档更新通知，请访问 www.ti.com.cn 网站上的器件产品文件夹。点击右上角的*提醒我* (Alert me) 注册后，即可每周定期收到已更改的产品信息。有关更改的详细信息，请查阅已修订文档中包含的修订历史记录。

11.4 社区资源

The following links connect to TI community resources. Linked contents are provided "AS IS" by the respective contributors. They do not constitute TI specifications and do not necessarily reflect TI's views; see TI's Terms of Use.

TI E2E™ Online Community ***TI's Engineer-to-Engineer (E2E) Community.*** Created to foster collaboration among engineers. At e2e.ti.com, you can ask questions, share knowledge, explore ideas and help solve problems with fellow engineers.

Design Support ***TI's Design Support*** Quickly find helpful E2E forums along with design support tools and contact information for technical support.

11.5 商标

E2E is a trademark of Texas Instruments.
All other trademarks are the property of their respective owners.

11.6 静电放电警告

ESD 可能会损坏该集成电路。德州仪器 (TI) 建议通过适当的预防措施处理所有集成电路。如果不遵守正确的处理措施和安装程序，可能会损坏集成电路。

ESD 的损坏小至导致微小的性能降级，大至整个器件故障。 精密的集成电路可能更容易受到损坏，这是因为非常细微的参数更改都可能会导致器件与其发布的规格不相符。

11.7 Glossary

SLYZ022 — *TI Glossary*.

This glossary lists and explains terms, acronyms, and definitions.

12 机械、封装和可订购信息

以下页中包括机械、封装和可订购信息。这些信息是针对指定器件可提供的最新数据。这些数据会在无通知且不对本文档进行修订的情况下发生改变。欲获得该数据表的浏览器版本，请查阅左侧的导航栏。

版权 © 2008–2017, Texas Instruments Incorporated

PACKAGING INFORMATION

Orderable Device	Status (1)	Package Type	Package Drawing	Pins	Package Qty	Eco Plan (2)	Lead finish/ Ball material (6)	MSL Peak Temp (3)	Op Temp (°C)	Device Marking (4/5)	Samples
INA210AIDCKR	ACTIVE	SC70	DCK	6	3000	RoHS & Green	NIPDAU	Level-2-260C-1 YEAR	-40 to 125	CET	Samples
INA210AIDCKT	ACTIVE	SC70	DCK	6	250	RoHS & Green	NIPDAU	Level-2-260C-1 YEAR	-40 to 125	CET	Samples
INA210AIRSWR	ACTIVE	UQFN	RSW	10	3000	RoHS & Green	NIPDAU	Level-1-260C-UNLIM	-40 to 125	KNJ	Samples
INA210AIRSWT	ACTIVE	UQFN	RSW	10	250	RoHS & Green	NIPDAU	Level-1-260C-UNLIM	-40 to 125	(KNJ, NSJ)	Samples
INA210BIDCKR	ACTIVE	SC70	DCK	6	3000	RoHS & Green	NIPDAU	Level-2-260C-1 YEAR	-40 to 125	SED	Samples
INA210BIDCKT	ACTIVE	SC70	DCK	6	250	RoHS & Green	NIPDAU	Level-2-260C-1 YEAR	-40 to 125	SED	Samples
INA210BIRSWR	ACTIVE	UQFN	RSW	10	3000	RoHS & Green	NIPDAU	Level-1-260C-UNLIM	-40 to 125	SHQ	Samples
INA210BIRSWT	ACTIVE	UQFN	RSW	10	250	RoHS & Green	NIPDAU	Level-1-260C-UNLIM	-40 to 125	SHQ	Samples
INA210CIDCKR	ACTIVE	SC70	DCK	6	3000	RoHS & Green	NIPDAU	Level-2-260C-1 YEAR	-40 to 125	16B	Samples
INA210CIDCKT	ACTIVE	SC70	DCK	6	250	RoHS & Green	NIPDAU	Level-2-260C-1 YEAR	-40 to 125	16B	Samples
INA210CIRSWR	ACTIVE	UQFN	RSW	10	3000	RoHS & Green	NIPDAU	Level-1-260C-UNLIM	-40 to 125	16C	Samples
INA210CIRSWT	ACTIVE	UQFN	RSW	10	250	RoHS & Green	NIPDAU	Level-1-260C-UNLIM	-40 to 125	16C	Samples
INA211AIDCKR	ACTIVE	SC70	DCK	6	3000	RoHS & Green	NIPDAU	Level-2-260C-1 YEAR	-40 to 125	CEU	Samples
INA211AIDCKT	ACTIVE	SC70	DCK	6	250	RoHS & Green	NIPDAU	Level-2-260C-1 YEAR	-40 to 125	CEU	Samples
INA211BIDCKR	ACTIVE	SC70	DCK	6	3000	RoHS & Green	NIPDAU	Level-2-260C-1 YEAR	-40 to 125	SEE	Samples
INA211BIDCKT	ACTIVE	SC70	DCK	6	250	RoHS & Green	NIPDAU	Level-2-260C-1 YEAR	-40 to 125	SEE	Samples
INA211BIRSWR	ACTIVE	UQFN	RSW	10	3000	RoHS & Green	NIPDAU	Level-1-260C-UNLIM	-40 to 125	13Q	Samples
INA211BIRSWT	ACTIVE	UQFN	RSW	10	250	RoHS & Green	NIPDAU	Level-1-260C-UNLIM	-40 to 125	13Q	Samples
INA211CIDCKR	ACTIVE	SC70	DCK	6	3000	RoHS & Green	NIPDAU	Level-2-260C-1 YEAR	-40 to 125	16D	Samples
INA211CIDCKT	ACTIVE	SC70	DCK	6	250	RoHS & Green	NIPDAU	Level-2-260C-1 YEAR	-40 to 125	16D	Samples

Orderable Device	Status (1)	Package Type	Package Drawing	Pins	Package Qty	Eco Plan (2)	Lead finish/ Ball material (6)	MSL Peak Temp (3)	Op Temp (°C)	Device Marking (4/5)	Samples
INA211CIRSWR	ACTIVE	UQFN	RSW	10	3000	RoHS & Green	NIPDAU	Level-1-260C-UNLIM	-40 to 125	16U	Samples
INA211CIRSWT	ACTIVE	UQFN	RSW	10	250	RoHS & Green	NIPDAU	Level-1-260C-UNLIM	-40 to 125	16U	Samples
INA212AIDCKR	ACTIVE	SC70	DCK	6	3000	RoHS & Green	NIPDAU	Level-2-260C-1 YEAR	-40 to 125	CEV	Samples
INA212AIDCKT	ACTIVE	SC70	DCK	6	250	RoHS & Green	NIPDAU	Level-2-260C-1 YEAR	-40 to 125	CEV	Samples
INA212BIDCKR	ACTIVE	SC70	DCK	6	3000	RoHS & Green	NIPDAU	Level-2-260C-1 YEAR	-40 to 125	SEC	Samples
INA212BIDCKT	ACTIVE	SC70	DCK	6	250	RoHS & Green	NIPDAU	Level-2-260C-1 YEAR	-40 to 125	SEC	Samples
INA212BIRSWR	ACTIVE	UQFN	RSW	10	3000	RoHS & Green	NIPDAU	Level-1-260C-UNLIM	-40 to 125	13U	Samples
INA212BIRSWT	ACTIVE	UQFN	RSW	10	250	RoHS & Green	NIPDAU	Level-1-260C-UNLIM	-40 to 125	13U	Samples
INA212CIDCKR	ACTIVE	SC70	DCK	6	3000	RoHS & Green	NIPDAU	Level-2-260C-1 YEAR	-40 to 125	16E	Samples
INA212CIDCKT	ACTIVE	SC70	DCK	6	250	RoHS & Green	NIPDAU	Level-2-260C-1 YEAR	-40 to 125	16E	Samples
INA212CIRSWR	ACTIVE	UQFN	RSW	10	3000	RoHS & Green	NIPDAU	Level-1-260C-UNLIM	-40 to 125	16V	Samples
INA212CIRSWT	ACTIVE	UQFN	RSW	10	250	RoHS & Green	NIPDAU	Level-1-260C-UNLIM	-40 to 125	16V	Samples
INA213AIDCKR	ACTIVE	SC70	DCK	6	3000	RoHS & Green	NIPDAU	Level-2-260C-1 YEAR	-40 to 125	CFT	Samples
INA213AIDCKT	ACTIVE	SC70	DCK	6	250	RoHS & Green	NIPDAU	Level-2-260C-1 YEAR	-40 to 125	CFT	Samples
INA213AIRSWR	ACTIVE	UQFN	RSW	10	3000	RoHS & Green	NIPDAU	Level-1-260C-UNLIM	-40 to 125	KPJ	Samples
INA213AIRSWT	ACTIVE	UQFN	RSW	10	250	RoHS & Green	NIPDAU	Level-1-260C-UNLIM	-40 to 125	KPJ	Samples
INA213BIDCKR	ACTIVE	SC70	DCK	6	3000	RoHS & Green	NIPDAU	Level-2-260C-1 YEAR	-40 to 125	SEF	Samples
INA213BIDCKT	ACTIVE	SC70	DCK	6	250	RoHS & Green	NIPDAU	Level-2-260C-1 YEAR	-40 to 125	SEF	Samples
INA213BIRSWR	ACTIVE	UQFN	RSW	10	3000	RoHS & Green	NIPDAU	Level-1-260C-UNLIM	-40 to 125	SHT	Samples
INA213BIRSWT	ACTIVE	UQFN	RSW	10	250	RoHS & Green	NIPDAU	Level-1-260C-UNLIM	-40 to 125	SHT	Samples
INA213CIDCKR	ACTIVE	SC70	DCK	6	3000	RoHS & Green	NIPDAU	Level-2-260C-1 YEAR	-40 to 125	16F	Samples

Orderable Device	Status (1)	Package Type	Package Drawing	Pins	Package Qty	Eco Plan (2)	Lead finish/ Ball material (6)	MSL Peak Temp (3)	Op Temp (°C)	Device Marking (4/5)	Samples
INA213CIDCKT	ACTIVE	SC70	DCK	6	250	RoHS & Green	NIPDAU	Level-2-260C-1 YEAR	-40 to 125	16F	Samples
INA213CIRSWR	ACTIVE	UQFN	RSW	10	3000	RoHS & Green	NIPDAU	Level-1-260C-UNLIM	-40 to 125	16W	Samples
INA213CIRSWT	ACTIVE	UQFN	RSW	10	250	RoHS & Green	NIPDAU	Level-1-260C-UNLIM	-40 to 125	16W	Samples
INA214AIDCKR	ACTIVE	SC70	DCK	6	3000	RoHS & Green	NIPDAU	Level-2-260C-1 YEAR	-40 to 125	CFV	Samples
INA214AIDCKT	ACTIVE	SC70	DCK	6	250	RoHS & Green	NIPDAU	Level-2-260C-1 YEAR	-40 to 125	CFV	Samples
INA214AIRSWR	ACTIVE	UQFN	RSW	10	3000	RoHS & Green	NIPDAU	Level-1-260C-UNLIM	-40 to 125	KRJ	Samples
INA214AIRSWT	ACTIVE	UQFN	RSW	10	250	RoHS & Green	NIPDAU	Level-1-260C-UNLIM	-40 to 125	KRJ	Samples
INA214BIDCKR	ACTIVE	SC70	DCK	6	3000	RoHS & Green	NIPDAU	Level-2-260C-1 YEAR	-40 to 125	SEA	Samples
INA214BIDCKT	ACTIVE	SC70	DCK	6	250	RoHS & Green	NIPDAU	Level-2-260C-1 YEAR	-40 to 125	SEA	Samples
INA214BIRSWR	ACTIVE	UQFN	RSW	10	3000	RoHS & Green	NIPDAU	Level-1-260C-UNLIM	-40 to 125	SHU	Samples
INA214BIRSWT	ACTIVE	UQFN	RSW	10	250	RoHS & Green	NIPDAU	Level-1-260C-UNLIM	-40 to 125	SHU	Samples
INA214CIDCKR	ACTIVE	SC70	DCK	6	3000	RoHS & Green	NIPDAU	Level-2-260C-1 YEAR	-40 to 125	16G	Samples
INA214CIDCKT	ACTIVE	SC70	DCK	6	250	RoHS & Green	NIPDAU	Level-2-260C-1 YEAR	-40 to 125	16G	Samples
INA214CIRSWR	ACTIVE	UQFN	RSW	10	3000	RoHS & Green	NIPDAU	Level-1-260C-UNLIM	-40 to 125	16X	Samples
INA214CIRSWT	ACTIVE	UQFN	RSW	10	250	RoHS & Green	NIPDAU	Level-1-260C-UNLIM	-40 to 125	16X	Samples
INA215AIDCKR	ACTIVE	SC70	DCK	6	3000	RoHS & Green	NIPDAU	Level-2-260C-1 YEAR	-40 to 125	SME	Samples
INA215AIDCKT	ACTIVE	SC70	DCK	6	250	RoHS & Green	NIPDAU	Level-2-260C-1 YEAR	-40 to 125	SME	Samples
INA215BIDCKR	ACTIVE	SC70	DCK	6	3000	RoHS & Green	NIPDAU	Level-2-260C-1 YEAR	-40 to 125	13S	Samples
INA215BIDCKT	ACTIVE	SC70	DCK	6	250	RoHS & Green	NIPDAU	Level-2-260C-1 YEAR	-40 to 125	13S	Samples
INA215BIRSWR	ACTIVE	UQFN	RSW	10	3000	RoHS & Green	NIPDAU	Level-1-260C-UNLIM	-40 to 125	13R	Samples
INA215BIRSWT	ACTIVE	UQFN	RSW	10	250	RoHS & Green	NIPDAU	Level-1-260C-UNLIM	-40 to 125	13R	Samples

Orderable Device	Status (1)	Package Type	Package Drawing	Pins	Package Qty	Eco Plan (2)	Lead finish/ Ball material (6)	MSL Peak Temp (3)	Op Temp (°C)	Device Marking (4/5)	Samples
INA215CIDCKR	ACTIVE	SC70	DCK	6	3000	RoHS & Green	NIPDAU	Level-2-260C-1 YEAR	-40 to 125	17K	Samples
INA215CIDCKT	ACTIVE	SC70	DCK	6	250	RoHS & Green	NIPDAU	Level-2-260C-1 YEAR	-40 to 125	17K	Samples
INA215CIRSWR	ACTIVE	UQFN	RSW	10	3000	RoHS & Green	NIPDAU	Level-1-260C-UNLIM	-40 to 125	16Z	Samples
INA215CIRSWT	ACTIVE	UQFN	RSW	10	250	RoHS & Green	NIPDAU	Level-1-260C-UNLIM	-40 to 125	16Z	Samples

(1) The marketing status values are defined as follows:
ACTIVE: Product device recommended for new designs.
LIFEBUY: TI has announced that the device will be discontinued, and a lifetime-buy period is in effect.
NRND: Not recommended for new designs. Device is in production to support existing customers, but TI does not recommend using this part in a new design.
PREVIEW: Device has been announced but is not in production. Samples may or may not be available.
OBSOLETE: TI has discontinued the production of the device.

(2) **RoHS:** TI defines "RoHS" to mean semiconductor products that are compliant with the current EU RoHS requirements for all 10 RoHS substances, including the requirement that RoHS substance do not exceed 0.1% by weight in homogeneous materials. Where designed to be soldered at high temperatures, "RoHS" products are suitable for use in specified lead-free processes. TI may reference these types of products as "Pb-Free".
RoHS Exempt: TI defines "RoHS Exempt" to mean products that contain lead but are compliant with EU RoHS pursuant to a specific EU RoHS exemption.
Green: TI defines "Green" to mean the content of Chlorine (Cl) and Bromine (Br) based flame retardants meet JS709B low halogen requirements of <=1000ppm threshold. Antimony trioxide based flame retardants must also meet the <=1000ppm threshold requirement.

(3) MSL, Peak Temp. - The Moisture Sensitivity Level rating according to the JEDEC industry standard classifications, and peak solder temperature.

(4) There may be additional marking, which relates to the logo, the lot trace code information, or the environmental category on the device.

(5) Multiple Device Markings will be inside parentheses. Only one Device Marking contained in parentheses and separated by a "~" will appear on a device. If a line is indented then it is a continuation of the previous line and the two combined represent the entire Device Marking for that device.

(6) Lead finish/Ball material - Orderable Devices may have multiple material finish options. Finish options are separated by a vertical ruled line. Lead finish/Ball material values may wrap to two lines if the finish value exceeds the maximum column width.

Important Information and Disclaimer: The information provided on this page represents TI's knowledge and belief as of the date that it is provided. TI bases its knowledge and belief on information provided by third parties, and makes no representation or warranty as to the accuracy of such information. Efforts are underway to better integrate information from third parties. TI has taken and continues to take reasonable steps to provide representative and accurate information but may not have conducted destructive testing or chemical analysis on incoming materials and chemicals. TI and TI suppliers consider certain information to be proprietary, and thus CAS numbers and other limited information may not be available for release.

In no event shall TI's liability arising out of such information exceed the total purchase price of the TI part(s) at issue in this document sold by TI to Customer on an annual basis.

OTHER QUALIFIED VERSIONS OF INA210, INA211, INA212, INA213, INA214, INA215 :

- Automotive : INA210-Q1, INA211-Q1, INA212-Q1, INA213-Q1, INA214-Q1, INA215-Q1

NOTE: Qualified Version Definitions:

- Automotive - Q100 devices qualified for high-reliability automotive applications targeting zero defects

TAPE AND REEL INFORMATION

REEL DIMENSIONS

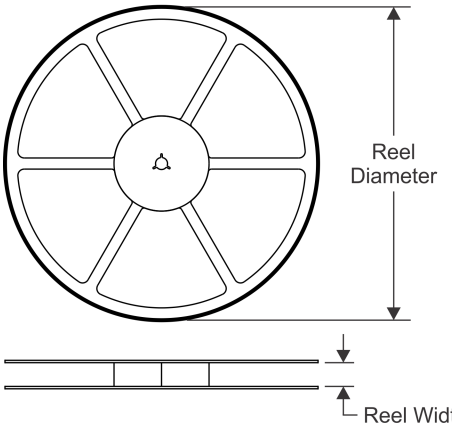

TAPE DIMENSIONS

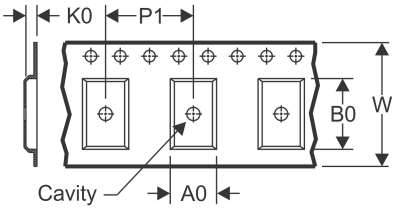

A0	Dimension designed to accommodate the component width
B0	Dimension designed to accommodate the component length
K0	Dimension designed to accommodate the component thickness
W	Overall width of the carrier tape
P1	Pitch between successive cavity centers

QUADRANT ASSIGNMENTS FOR PIN 1 ORIENTATION IN TAPE

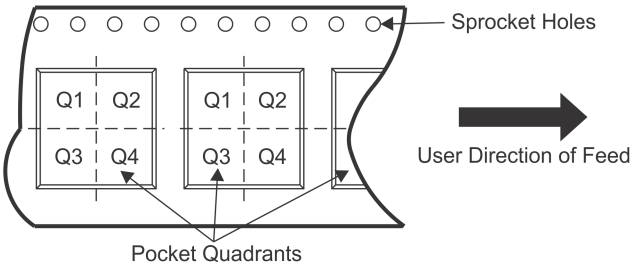

*All dimensions are nominal

Device	Package Type	Package Drawing	Pins	SPQ	Reel Diameter (mm)	Reel Width W1 (mm)	A0 (mm)	B0 (mm)	K0 (mm)	P1 (mm)	W (mm)	Pin1 Quadrant
INA210AIDCKR	SC70	DCK	6	3000	178.0	9.0	2.4	2.5	1.2	4.0	8.0	Q3
INA210AIDCKR	SC70	DCK	6	3000	179.0	8.4	2.2	2.5	1.2	4.0	8.0	Q3
INA210AIDCKT	SC70	DCK	6	250	178.0	9.0	2.4	2.5	1.2	4.0	8.0	Q3
INA210AIDCKT	SC70	DCK	6	250	179.0	8.4	2.2	2.5	1.2	4.0	8.0	Q3
INA210BIDCKR	SC70	DCK	6	3000	178.0	9.0	2.4	2.5	1.2	4.0	8.0	Q3
INA210BIDCKT	SC70	DCK	6	250	178.0	9.0	2.4	2.5	1.2	4.0	8.0	Q3
INA210BIRSWT	UQFN	RSW	10	250	180.0	9.5	1.6	2.0	0.8	4.0	8.0	Q1
INA210BIRSWT	UQFN	RSW	10	250	179.0	8.4	1.7	2.1	0.7	4.0	8.0	Q1
INA210CIDCKR	SC70	DCK	6	3000	178.0	9.0	2.4	2.5	1.2	4.0	8.0	Q3
INA210CIDCKT	SC70	DCK	6	250	178.0	9.0	2.4	2.5	1.2	4.0	8.0	Q3
INA210CIRSWR	UQFN	RSW	10	3000	180.0	9.5	1.6	2.0	0.8	4.0	8.0	Q1
INA210CIRSWR	UQFN	RSW	10	3000	179.0	8.4	1.7	2.1	0.7	4.0	8.0	Q1
INA210CIRSWT	UQFN	RSW	10	250	179.0	8.4	1.7	2.1	0.7	4.0	8.0	Q1
INA210CIRSWT	UQFN	RSW	10	250	180.0	9.5	1.6	2.0	0.8	4.0	8.0	Q1
INA211AIDCKR	SC70	DCK	6	3000	178.0	9.0	2.4	2.5	1.2	4.0	8.0	Q3
INA211AIDCKR	SC70	DCK	6	3000	179.0	8.4	2.2	2.5	1.2	4.0	8.0	Q3
INA211AIDCKR	SC70	DCK	6	3000	180.0	8.4	2.47	2.3	1.25	4.0	8.0	Q3
INA211AIDCKT	SC70	DCK	6	250	179.0	8.4	2.2	2.5	1.2	4.0	8.0	Q3

Device	Package Type	Package Drawing	Pins	SPQ	Reel Diameter (mm)	Reel Width W1 (mm)	A0 (mm)	B0 (mm)	K0 (mm)	P1 (mm)	W (mm)	Pin1 Quadrant
INA211AIDCKT	SC70	DCK	6	250	180.0	8.4	2.47	2.3	1.25	4.0	8.0	Q3
INA211AIDCKT	SC70	DCK	6	250	178.0	9.0	2.4	2.5	1.2	4.0	8.0	Q3
INA211BIDCKR	SC70	DCK	6	3000	178.0	9.0	2.4	2.5	1.2	4.0	8.0	Q3
INA211BIDCKT	SC70	DCK	6	250	178.0	9.0	2.4	2.5	1.2	4.0	8.0	Q3
INA211BIRSWR	UQFN	RSW	10	3000	179.0	8.4	1.7	2.1	0.7	4.0	8.0	Q1
INA211BIRSWT	UQFN	RSW	10	250	179.0	8.4	1.7	2.1	0.7	4.0	8.0	Q1
INA211CIDCKR	SC70	DCK	6	3000	178.0	9.0	2.4	2.5	1.2	4.0	8.0	Q3
INA211CIDCKT	SC70	DCK	6	250	178.0	9.0	2.4	2.5	1.2	4.0	8.0	Q3
INA211CIRSWR	UQFN	RSW	10	3000	180.0	9.5	1.6	2.0	0.8	4.0	8.0	Q1
INA211CIRSWT	UQFN	RSW	10	250	179.0	8.4	1.7	2.1	0.7	4.0	8.0	Q1
INA211CIRSWT	UQFN	RSW	10	250	180.0	9.5	1.6	2.0	0.8	4.0	8.0	Q1
INA212AIDCKR	SC70	DCK	6	3000	180.0	8.4	2.47	2.3	1.25	4.0	8.0	Q3
INA212AIDCKT	SC70	DCK	6	250	180.0	8.4	2.41	2.41	1.2	4.0	8.0	Q3
INA212BIDCKR	SC70	DCK	6	3000	178.0	9.0	2.4	2.5	1.2	4.0	8.0	Q3
INA212BIDCKT	SC70	DCK	6	250	178.0	9.0	2.4	2.5	1.2	4.0	8.0	Q3
INA212BIRSWR	UQFN	RSW	10	3000	179.0	8.4	1.7	2.1	0.7	4.0	8.0	Q1
INA212BIRSWR	UQFN	RSW	10	3000	180.0	9.5	1.6	2.0	0.8	4.0	8.0	Q1
INA212BIRSWT	UQFN	RSW	10	250	179.0	8.4	1.7	2.1	0.7	4.0	8.0	Q1
INA212BIRSWT	UQFN	RSW	10	250	180.0	9.5	1.6	2.0	0.8	4.0	8.0	Q1
INA212CIDCKR	SC70	DCK	6	3000	178.0	9.0	2.4	2.5	1.2	4.0	8.0	Q3
INA212CIDCKT	SC70	DCK	6	250	178.0	9.0	2.4	2.5	1.2	4.0	8.0	Q3
INA212CIRSWR	UQFN	RSW	10	3000	180.0	9.5	1.6	2.0	0.8	4.0	8.0	Q1
INA212CIRSWR	UQFN	RSW	10	3000	179.0	8.4	1.7	2.1	0.7	4.0	8.0	Q1
INA212CIRSWT	UQFN	RSW	10	250	180.0	9.5	1.6	2.0	0.8	4.0	8.0	Q1
INA212CIRSWT	UQFN	RSW	10	250	179.0	8.4	1.7	2.1	0.7	4.0	8.0	Q1
INA213AIDCKR	SC70	DCK	6	3000	178.0	9.0	2.4	2.5	1.2	4.0	8.0	Q3
INA213AIDCKR	SC70	DCK	6	3000	179.0	8.4	2.2	2.5	1.2	4.0	8.0	Q3
INA213AIDCKT	SC70	DCK	6	250	178.0	9.0	2.4	2.5	1.2	4.0	8.0	Q3
INA213AIDCKT	SC70	DCK	6	250	179.0	8.4	2.2	2.5	1.2	4.0	8.0	Q3
INA213AIRSWR	UQFN	RSW	10	3000	179.0	8.4	1.7	2.1	0.7	4.0	8.0	Q1
INA213AIRSWT	UQFN	RSW	10	250	179.0	8.4	1.7	2.1	0.7	4.0	8.0	Q1
INA213BIDCKR	SC70	DCK	6	3000	178.0	9.0	2.4	2.5	1.2	4.0	8.0	Q3
INA213BIDCKT	SC70	DCK	6	250	178.0	9.0	2.4	2.5	1.2	4.0	8.0	Q3
INA213BIRSWR	UQFN	RSW	10	3000	180.0	9.5	1.6	2.0	0.8	4.0	8.0	Q1
INA213BIRSWT	UQFN	RSW	10	250	180.0	9.5	1.6	2.0	0.8	4.0	8.0	Q1
INA213BIRSWT	UQFN	RSW	10	250	179.0	8.4	1.7	2.1	0.7	4.0	8.0	Q1
INA213CIDCKR	SC70	DCK	6	3000	178.0	9.0	2.4	2.5	1.2	4.0	8.0	Q3
INA213CIDCKT	SC70	DCK	6	250	178.0	9.0	2.4	2.5	1.2	4.0	8.0	Q3
INA213CIRSWR	UQFN	RSW	10	3000	179.0	8.4	1.7	2.1	0.7	4.0	8.0	Q1
INA213CIRSWR	UQFN	RSW	10	3000	180.0	9.5	1.6	2.0	0.8	4.0	8.0	Q1
INA213CIRSWT	UQFN	RSW	10	250	180.0	9.5	1.6	2.0	0.8	4.0	8.0	Q1
INA213CIRSWT	UQFN	RSW	10	250	179.0	8.4	1.7	2.1	0.7	4.0	8.0	Q1
INA214AIDCKR	SC70	DCK	6	3000	178.0	9.0	2.4	2.5	1.2	4.0	8.0	Q3

Device	Package Type	Package Drawing	Pins	SPQ	Reel Diameter (mm)	Reel Width W1 (mm)	A0 (mm)	B0 (mm)	K0 (mm)	P1 (mm)	W (mm)	Pin1 Quadrant
INA214AIDCKR	SC70	DCK	6	3000	179.0	8.4	2.2	2.5	1.2	4.0	8.0	Q3
INA214AIDCKT	SC70	DCK	6	250	178.0	9.0	2.4	2.5	1.2	4.0	8.0	Q3
INA214AIDCKT	SC70	DCK	6	250	179.0	8.4	2.2	2.5	1.2	4.0	8.0	Q3
INA214AIRSWT	UQFN	RSW	10	250	179.0	8.4	1.7	2.1	0.7	4.0	8.0	Q1
INA214BIDCKR	SC70	DCK	6	3000	178.0	9.0	2.4	2.5	1.2	4.0	8.0	Q3
INA214BIDCKT	SC70	DCK	6	250	178.0	9.0	2.4	2.5	1.2	4.0	8.0	Q3
INA214BIRSWR	UQFN	RSW	10	3000	180.0	9.5	1.6	2.0	0.8	4.0	8.0	Q1
INA214BIRSWR	UQFN	RSW	10	3000	179.0	8.4	1.7	2.1	0.7	4.0	8.0	Q1
INA214BIRSWT	UQFN	RSW	10	250	180.0	9.5	1.6	2.0	0.8	4.0	8.0	Q1
INA214BIRSWT	UQFN	RSW	10	250	179.0	8.4	1.7	2.1	0.7	4.0	8.0	Q1
INA214CIDCKR	SC70	DCK	6	3000	178.0	9.0	2.4	2.5	1.2	4.0	8.0	Q3
INA214CIDCKT	SC70	DCK	6	250	178.0	9.0	2.4	2.5	1.2	4.0	8.0	Q3
INA214CIRSWR	UQFN	RSW	10	3000	180.0	9.5	1.6	2.0	0.8	4.0	8.0	Q1
INA214CIRSWR	UQFN	RSW	10	3000	179.0	8.4	1.7	2.1	0.7	4.0	8.0	Q1
INA214CIRSWT	UQFN	RSW	10	250	179.0	8.4	1.7	2.1	0.7	4.0	8.0	Q1
INA214CIRSWT	UQFN	RSW	10	250	180.0	9.5	1.6	2.0	0.8	4.0	8.0	Q1
INA215AIDCKR	SC70	DCK	6	3000	178.0	8.4	2.4	2.5	1.2	4.0	8.0	Q3
INA215AIDCKT	SC70	DCK	6	250	178.0	9.0	2.4	2.5	1.2	4.0	8.0	Q3
INA215BIDCKR	SC70	DCK	6	3000	178.0	9.0	2.4	2.5	1.2	4.0	8.0	Q3
INA215BIDCKT	SC70	DCK	6	250	178.0	9.0	2.4	2.5	1.2	4.0	8.0	Q3
INA215BIRSWR	UQFN	RSW	10	3000	179.0	8.4	1.7	2.1	0.7	4.0	8.0	Q1
INA215BIRSWR	UQFN	RSW	10	3000	180.0	9.5	1.6	2.0	0.8	4.0	8.0	Q1
INA215BIRSWT	UQFN	RSW	10	250	179.0	8.4	1.7	2.1	0.7	4.0	8.0	Q1
INA215BIRSWT	UQFN	RSW	10	250	180.0	9.5	1.6	2.0	0.8	4.0	8.0	Q1
INA215CIDCKR	SC70	DCK	6	3000	178.0	9.0	2.4	2.5	1.2	4.0	8.0	Q3
INA215CIDCKT	SC70	DCK	6	250	178.0	9.0	2.4	2.5	1.2	4.0	8.0	Q3
INA215CIRSWR	UQFN	RSW	10	3000	179.0	8.4	1.7	2.1	0.7	4.0	8.0	Q1
INA215CIRSWR	UQFN	RSW	10	3000	180.0	9.5	1.6	2.0	0.8	4.0	8.0	Q1
INA215CIRSWT	UQFN	RSW	10	250	180.0	9.5	1.6	2.0	0.8	4.0	8.0	Q1
INA215CIRSWT	UQFN	RSW	10	250	179.0	8.4	1.7	2.1	0.7	4.0	8.0	Q1

TAPE AND REEL BOX DIMENSIONS

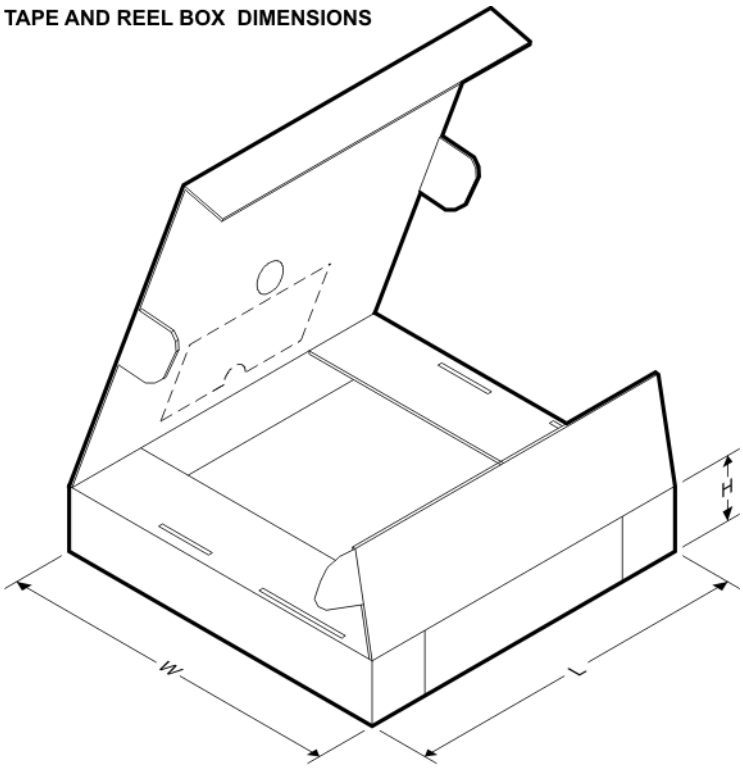

*All dimensions are nominal

Device	Package Type	Package Drawing	Pins	SPQ	Length (mm)	Width (mm)	Height (mm)
INA210AIDCKR	SC70	DCK	6	3000	180.0	180.0	18.0
INA210AIDCKR	SC70	DCK	6	3000	213.0	191.0	35.0
INA210AIDCKT	SC70	DCK	6	250	180.0	180.0	18.0
INA210AIDCKT	SC70	DCK	6	250	213.0	191.0	35.0
INA210BIDCKR	SC70	DCK	6	3000	180.0	180.0	18.0
INA210BIDCKT	SC70	DCK	6	250	180.0	180.0	18.0
INA210BIRSWT	UQFN	RSW	10	250	189.0	185.0	36.0
INA210BIRSWT	UQFN	RSW	10	250	200.0	183.0	25.0
INA210CIDCKR	SC70	DCK	6	3000	340.0	340.0	38.0
INA210CIDCKT	SC70	DCK	6	250	340.0	340.0	38.0
INA210CIRSWR	UQFN	RSW	10	3000	189.0	185.0	36.0
INA210CIRSWR	UQFN	RSW	10	3000	203.0	203.0	35.0
INA210CIRSWT	UQFN	RSW	10	250	200.0	183.0	25.0
INA210CIRSWT	UQFN	RSW	10	250	189.0	185.0	36.0
INA211AIDCKR	SC70	DCK	6	3000	180.0	180.0	18.0
INA211AIDCKR	SC70	DCK	6	3000	213.0	191.0	35.0
INA211AIDCKR	SC70	DCK	6	3000	223.0	270.0	35.0
INA211AIDCKT	SC70	DCK	6	250	213.0	191.0	35.0
INA211AIDCKT	SC70	DCK	6	250	223.0	270.0	35.0
INA211AIDCKT	SC70	DCK	6	250	180.0	180.0	18.0

Device	Package Type	Package Drawing	Pins	SPQ	Length (mm)	Width (mm)	Height (mm)
INA211BIDCKR	SC70	DCK	6	3000	180.0	180.0	18.0
INA211BIDCKT	SC70	DCK	6	250	180.0	180.0	18.0
INA211BIRSWR	UQFN	RSW	10	3000	200.0	183.0	25.0
INA211BIRSWT	UQFN	RSW	10	250	200.0	183.0	25.0
INA211CIDCKR	SC70	DCK	6	3000	340.0	340.0	38.0
INA211CIDCKT	SC70	DCK	6	250	340.0	340.0	38.0
INA211CIRSWR	UQFN	RSW	10	3000	189.0	185.0	36.0
INA211CIRSWT	UQFN	RSW	10	250	203.0	203.0	35.0
INA211CIRSWT	UQFN	RSW	10	250	189.0	185.0	36.0
INA212AIDCKR	SC70	DCK	6	3000	223.0	270.0	35.0
INA212AIDCKT	SC70	DCK	6	250	223.0	270.0	35.0
INA212BIDCKR	SC70	DCK	6	3000	180.0	180.0	18.0
INA212BIDCKT	SC70	DCK	6	250	180.0	180.0	18.0
INA212BIRSWR	UQFN	RSW	10	3000	200.0	183.0	25.0
INA212BIRSWR	UQFN	RSW	10	3000	189.0	185.0	36.0
INA212BIRSWT	UQFN	RSW	10	250	200.0	183.0	25.0
INA212BIRSWT	UQFN	RSW	10	250	189.0	185.0	36.0
INA212CIDCKR	SC70	DCK	6	3000	340.0	340.0	38.0
INA212CIDCKT	SC70	DCK	6	250	340.0	340.0	38.0
INA212CIRSWR	UQFN	RSW	10	3000	189.0	185.0	36.0
INA212CIRSWR	UQFN	RSW	10	3000	203.0	203.0	35.0
INA212CIRSWT	UQFN	RSW	10	250	189.0	185.0	36.0
INA212CIRSWT	UQFN	RSW	10	250	203.0	203.0	35.0
INA213AIDCKR	SC70	DCK	6	3000	180.0	180.0	18.0
INA213AIDCKR	SC70	DCK	6	3000	213.0	191.0	35.0
INA213AIDCKT	SC70	DCK	6	250	180.0	180.0	18.0
INA213AIDCKT	SC70	DCK	6	250	213.0	191.0	35.0
INA213AIRSWR	UQFN	RSW	10	3000	200.0	183.0	25.0
INA213AIRSWT	UQFN	RSW	10	250	200.0	183.0	25.0
INA213BIDCKR	SC70	DCK	6	3000	180.0	180.0	18.0
INA213BIDCKT	SC70	DCK	6	250	180.0	180.0	18.0
INA213BIRSWR	UQFN	RSW	10	3000	189.0	185.0	36.0
INA213BIRSWT	UQFN	RSW	10	250	189.0	185.0	36.0
INA213BIRSWT	UQFN	RSW	10	250	203.0	203.0	35.0
INA213CIDCKR	SC70	DCK	6	3000	340.0	340.0	38.0
INA213CIDCKT	SC70	DCK	6	250	340.0	340.0	38.0
INA213CIRSWR	UQFN	RSW	10	3000	200.0	183.0	25.0
INA213CIRSWR	UQFN	RSW	10	3000	189.0	185.0	36.0
INA213CIRSWT	UQFN	RSW	10	250	189.0	185.0	36.0
INA213CIRSWT	UQFN	RSW	10	250	200.0	183.0	25.0
INA214AIDCKR	SC70	DCK	6	3000	180.0	180.0	18.0
INA214AIDCKR	SC70	DCK	6	3000	213.0	191.0	35.0
INA214AIDCKT	SC70	DCK	6	250	180.0	180.0	18.0
INA214AIDCKT	SC70	DCK	6	250	213.0	191.0	35.0

Device	Package Type	Package Drawing	Pins	SPQ	Length (mm)	Width (mm)	Height (mm)
INA214AIRSWT	UQFN	RSW	10	250	200.0	183.0	25.0
INA214BIDCKR	SC70	DCK	6	3000	180.0	180.0	18.0
INA214BIDCKT	SC70	DCK	6	250	180.0	180.0	18.0
INA214BIRSWR	UQFN	RSW	10	3000	189.0	185.0	36.0
INA214BIRSWR	UQFN	RSW	10	3000	200.0	183.0	25.0
INA214BIRSWT	UQFN	RSW	10	250	189.0	185.0	36.0
INA214BIRSWT	UQFN	RSW	10	250	200.0	183.0	25.0
INA214CIDCKR	SC70	DCK	6	3000	180.0	180.0	18.0
INA214CIDCKT	SC70	DCK	6	250	180.0	180.0	18.0
INA214CIRSWR	UQFN	RSW	10	3000	189.0	185.0	36.0
INA214CIRSWR	UQFN	RSW	10	3000	203.0	203.0	35.0
INA214CIRSWT	UQFN	RSW	10	250	203.0	203.0	35.0
INA214CIRSWT	UQFN	RSW	10	250	189.0	185.0	36.0
INA215AIDCKR	SC70	DCK	6	3000	340.0	340.0	38.0
INA215AIDCKT	SC70	DCK	6	250	340.0	340.0	38.0
INA215BIDCKR	SC70	DCK	6	3000	340.0	340.0	38.0
INA215BIDCKT	SC70	DCK	6	250	340.0	340.0	38.0
INA215BIRSWR	UQFN	RSW	10	3000	200.0	183.0	25.0
INA215BIRSWR	UQFN	RSW	10	3000	189.0	185.0	36.0
INA215BIRSWT	UQFN	RSW	10	250	200.0	183.0	25.0
INA215BIRSWT	UQFN	RSW	10	250	189.0	185.0	36.0
INA215CIDCKR	SC70	DCK	6	3000	340.0	340.0	38.0
INA215CIDCKT	SC70	DCK	6	250	340.0	340.0	38.0
INA215CIRSWR	UQFN	RSW	10	3000	203.0	203.0	35.0
INA215CIRSWR	UQFN	RSW	10	3000	189.0	185.0	36.0
INA215CIRSWT	UQFN	RSW	10	250	189.0	185.0	36.0
INA215CIRSWT	UQFN	RSW	10	250	203.0	203.0	35.0

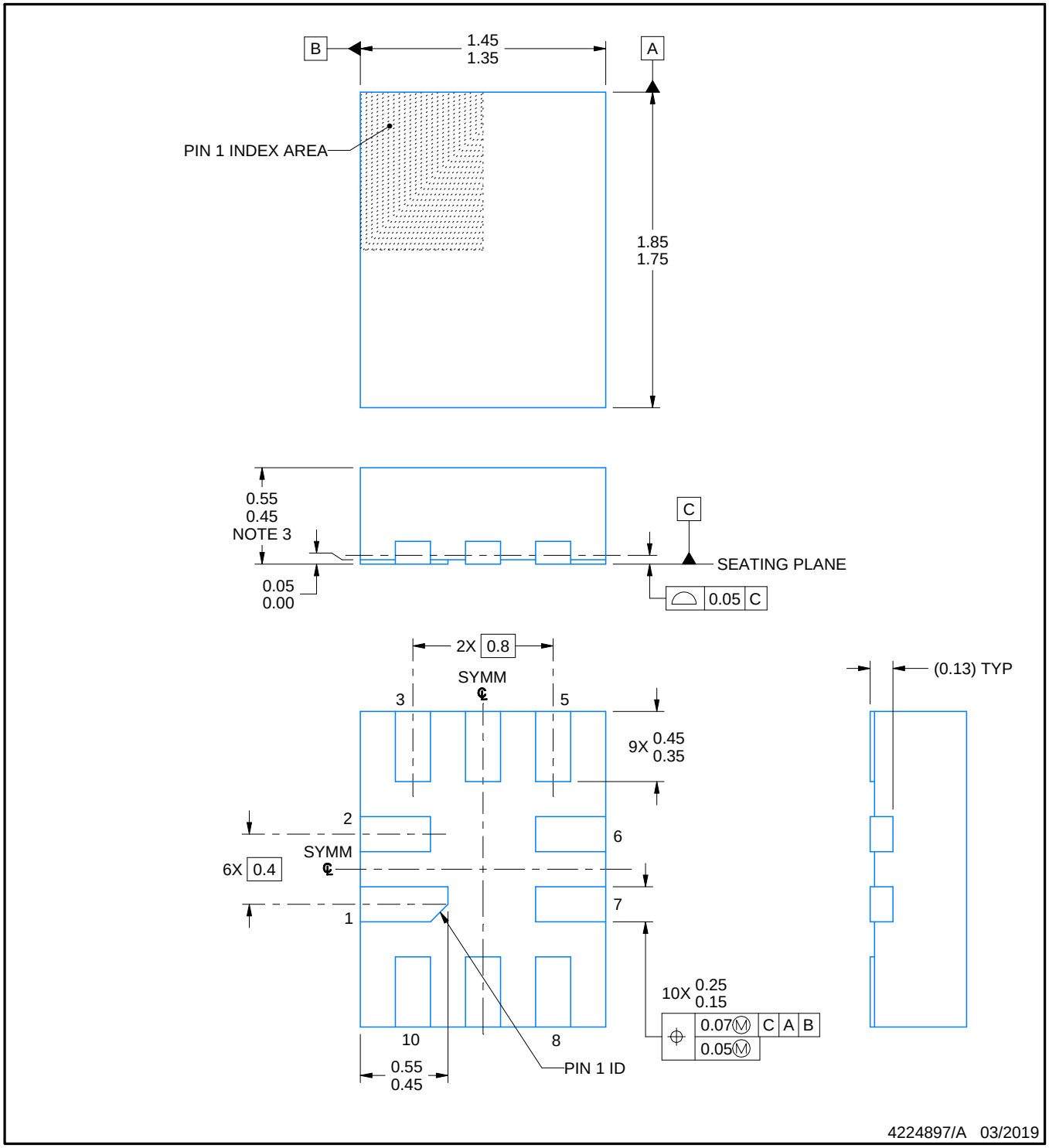

NOTES:

1. All linear dimensions are in millimeters. Any dimensions in parenthesis are for reference only. Dimensioning and tolerancing per ASME Y14.5M.
2. This drawing is subject to change without notice.
3. This package complies to JEDEC MO-288 variation UDEE, except minimum package height.

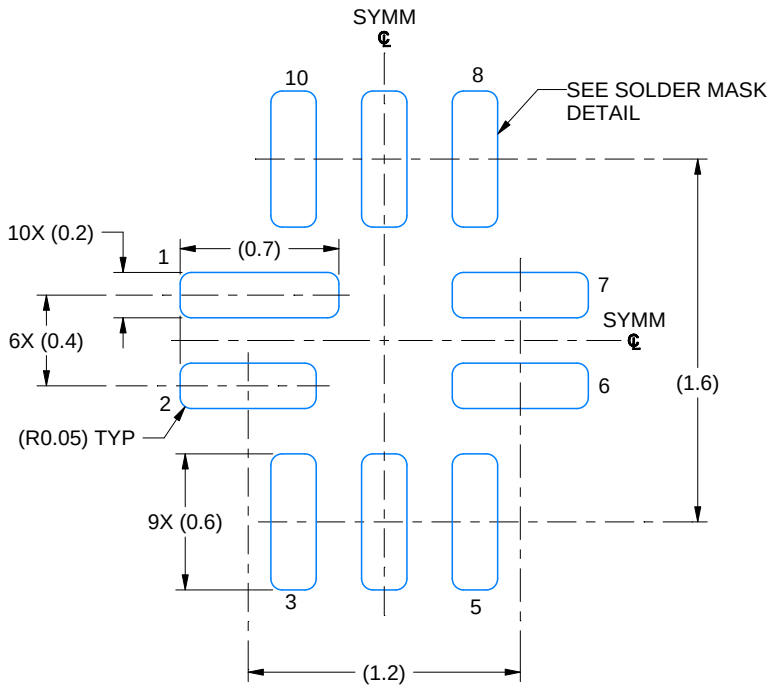

LAND PATTERN EXAMPLE
EXPOSED METAL SHOWN
SCALE: 30X

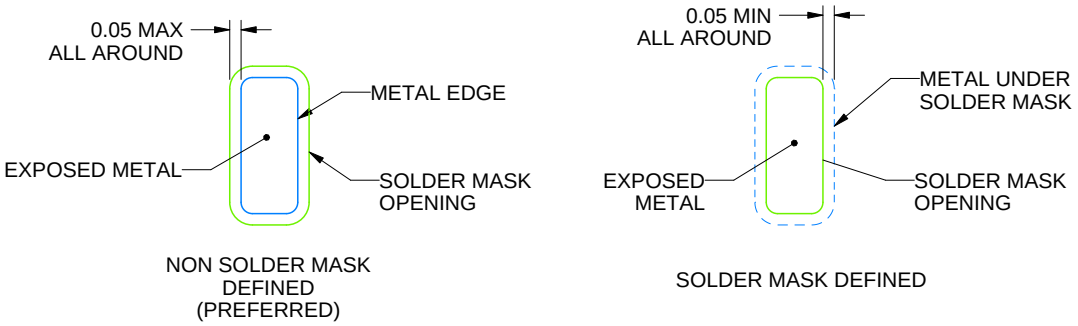

SOLDER MASK DETAILS

4224897/A 03/2019

NOTES: (continued)

4. This package is designed to be soldered to a thermal pad on the board. For more information, see Texas Instruments literature number SLUA271 (www.ti.com/lit/slua271).
5. Vias are optional depending on application, refer to device data sheet. If any vias are implemented, refer to their locations shown on this view. It is recommended that vias under paste be filled, plugged or tented.

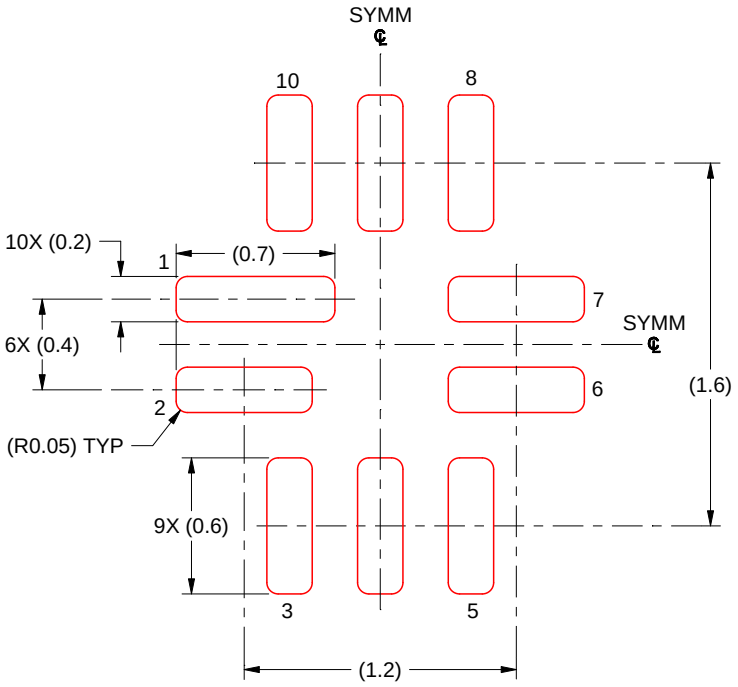

SOLDER PASTE EXAMPLE
BASED ON 0.125 MM THICK STENCIL
SCALE: 30X

4224897/A 03/2019

NOTES: (continued)

6. Laser cutting apertures with trapezoidal walls and rounded corners may offer better paste release. IPC-7525 may have alternate design recommendations.

DCK (R–PDSO–G6) PLASTIC SMALL–OUTLINE PACKAGE

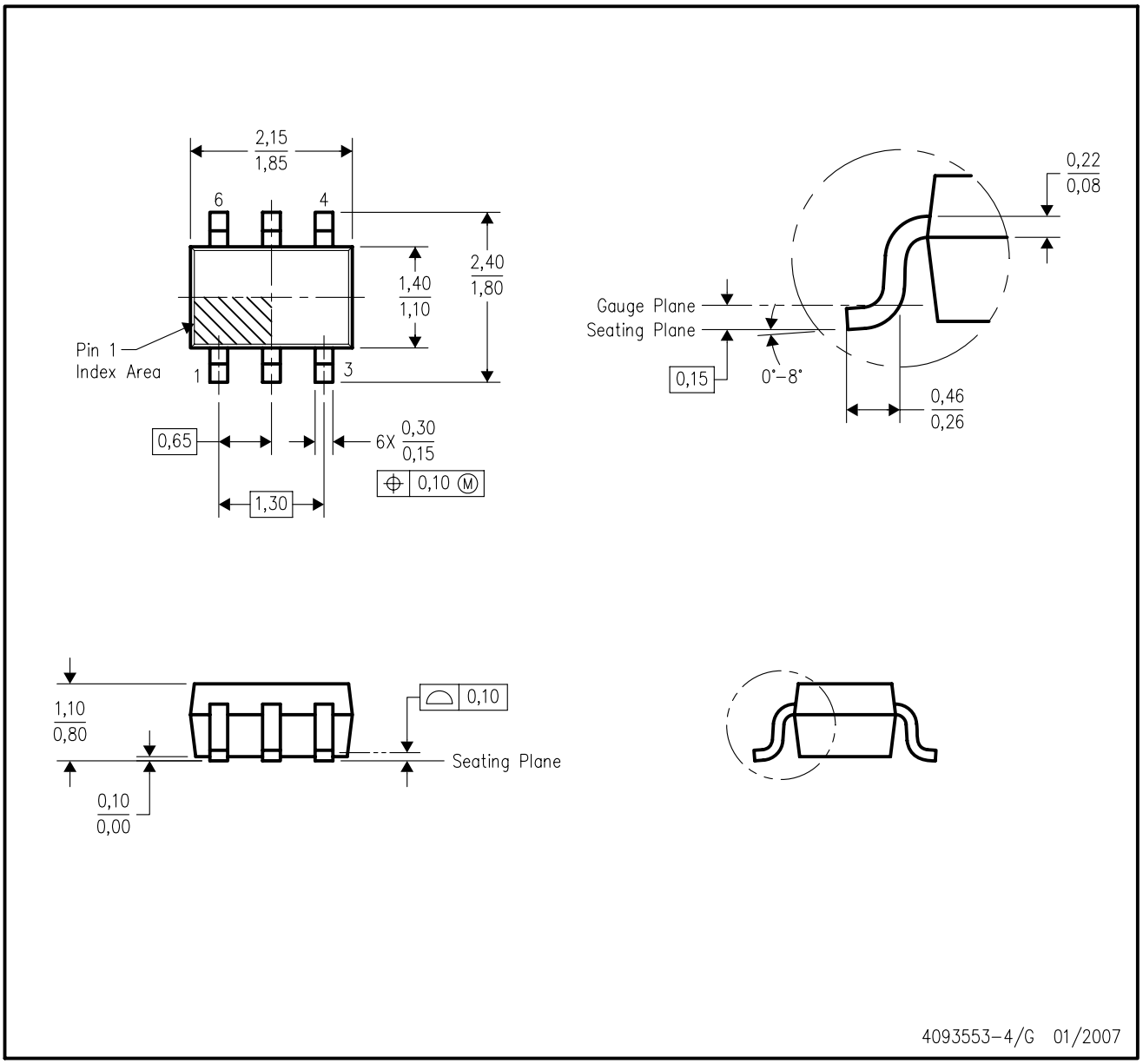

NOTES:
A. All linear dimensions are in millimeters.
B. This drawing is subject to change without notice.
C. Body dimensions do not include mold flash or protrusion. Mold flash and protrusion shall not exceed 0.15 per side.
D. Falls within JEDEC MO–203 variation AB.

DCK (R-PDSO-G6) PLASTIC SMALL OUTLINE

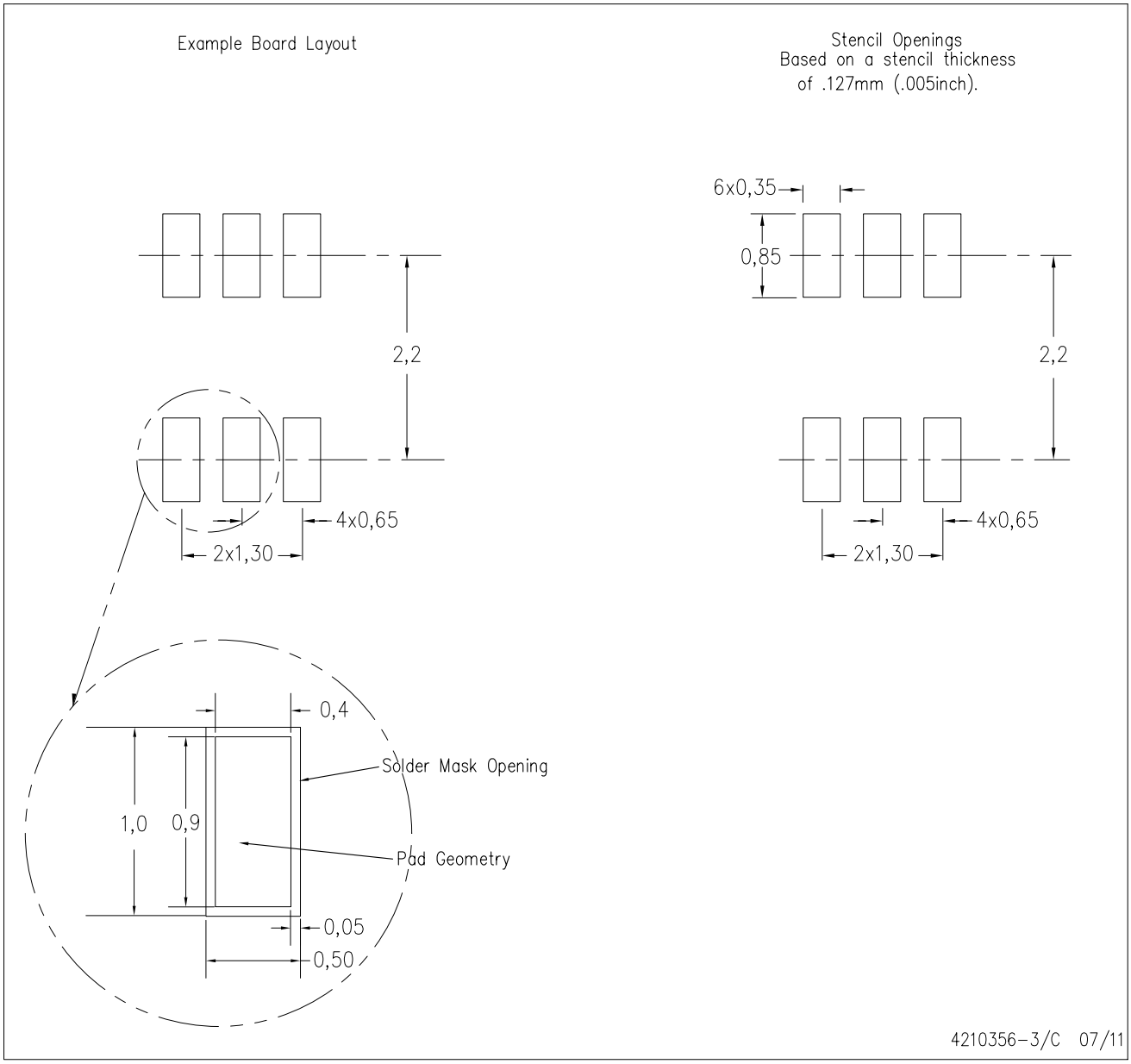

NOTES:
A. All linear dimensions are in millimeters.
B. This drawing is subject to change without notice.
C. Customers should place a note on the circuit board fabrication drawing not to alter the center solder mask defined pad.
D. Publication IPC-7351 is recommended for alternate designs.
E. Laser cutting apertures with trapezoidal walls and also rounding corners will offer better paste release. Customers should contact their board assembly site for stencil design recommendations. Example stencil design based on a 50% volumetric metal load solder paste. Refer to IPC-7525 for other stencil recommendations.

重要声明和免责声明

TI“按原样”提供技术和可靠性数据（包括数据表）、设计资源（包括参考设计）、应用或其他设计建议、网络工具、安全信息和其他资源，不保证没有瑕疵且不做出任何明示或暗示的担保，包括但不限于对适销性、某特定用途方面的适用性或不侵犯任何第三方知识产权的暗示担保。

这些资源可供使用 TI 产品进行设计的熟练开发人员使用。您将自行承担以下全部责任：(1) 针对您的应用选择合适的 TI 产品，(2) 设计、验证并测试您的应用，(3) 确保您的应用满足相应标准以及任何其他功能安全、信息安全、监管或其他要求。

这些资源如有变更，恕不另行通知。TI 授权您仅可将这些资源用于研发本资源所述的 TI 产品的应用。严禁对这些资源进行其他复制或展示。您无权使用任何其他 TI 知识产权或任何第三方知识产权。您应全额赔偿因在这些资源的使用中对 TI 及其代表造成的任何索赔、损害、成本、损失和债务，TI 对此概不负责。

TI 提供的产品受 TI 的销售条款或 ti.com 上其他适用条款/TI 产品随附的其他适用条款的约束。TI 提供这些资源并不会扩展或以其他方式更改 TI 针对 TI 产品发布的适用的担保或担保免责声明。

TI 反对并拒绝您可能提出的任何其他或不同的条款。

邮寄地址：Texas Instruments, Post Office Box 655303, Dallas, Texas 75265
Copyright © 2022，德州仪器 (TI) 公司