DRV8816 DMOS Dual 1/2-H-Bridge Motor Drivers

1 Features

- H-Bridge Motor Driver Individual
  - Drives a DC Motor or Other Loads
  - Low $R_{DS(on)}$ MOSFETs (0.4-Ω TYP)
- Low-Power Sleep Mode
- 100% PWM Supported
- 8- to 38-V Operating Supply Voltage Range
- Thermally Enhanced Surface Mount Package
- Configurable Overcurrent Limit
- Protection Features
  - VBB Undervoltage Lockout (UVLO)
  - Charge Pump Undervoltage (CPUV)
  - Overcurrent Protection (OCP)
  - Short-to-Supply Protection (STS)
  - Short-to-Ground Protection (STG)
  - Overtemperature Warning (OTW)
  - Overtemperature Shutdown (OTS)
  - Fault Condition Indication Pin (nFAULT)

2 Applications

- Printers
- Industrial Automation
- Robotics
- Motorized Levers

3 Description

The DRV8816 provides a versatile power driver solution with two independent ½-H bridge drivers. The device can drive one brushed DC motor or one winding of a stepper motor, as well as other devices like solenoids. A simple INx/ENx interface allows easy interfacing to controller circuits.

The output stages use N-channel power MOSFETs configured as ½-H-bridges. The DRV8816 is capable of peak output currents up to ±2.8 A and operating voltages up to 38 V. An internal charge pump generates needed gate drive voltages.

A low-power sleep mode is provided which shuts down internal circuitry to achieve very-low quiescent current draw. This sleep mode can be set using a dedicated nSLEEP pin.

Internal protection functions are provided for UVLO, charge pump fault, OCP, short-to-supply protection, short-to-ground protection, overtemperature warning, and overtemperature shutdown. Fault conditions are indicated through a nFAULT pin

The DRV8816 is packaged in a 16-pin HTSSOP package with PowerPAD™ (Eco-friendly: RoHS & no Sb/Br)

Device Information(1)

PART NUMBER	PACKAGE	BODY SIZE (NOM)
DRV8816	HTSSOP (16)	4.40 mm × 5.00 mm

(1) For all available packages, see the orderable addendum at the end of the data sheet.

Simplified Schematic

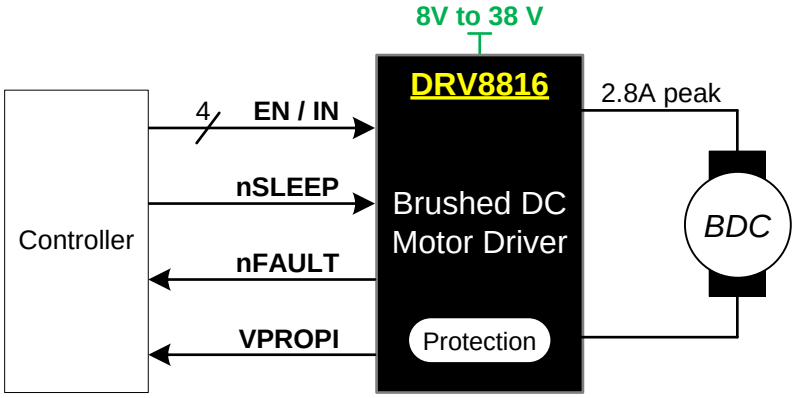

An IMPORTANT NOTICE at the end of this data sheet addresses availability, warranty, changes, use in safety-critical applications, intellectual property matters and other important disclaimers. PRODUCTION DATA.

Table of Contents

1 Features ... 1
2 Applications ... 1
3 Description ... 1
4 Revision History ... 2
5 Pin Configuration and Functions ... 3
6 Specifications ... 4
6.1 Absolute Maximum Ratings ... 4
6.2 ESD Ratings ... 4
6.3 Recommended Operating Conditions ... 4
6.4 Thermal Information ... 5
6.5 Electrical Characteristics ... 5
6.6 Typical Characteristics ... 6
7 Detailed Description ... 8
7.1 Overview ... 8
7.2 Functional Block Diagram ... 8
7.3 Feature Description ... 8
7.4 Device Functional Modes ... 11
8 Application and Implementation ... 13
8.1 Application Information ... 13
8.2 Typical Application ... 13
9 Power Supply Recommendations ... 16
9.1 Bulk Capacitance ... 16
9.2 Power Supervisor ... 16
10 Layout ... 17
10.1 Layout Guidelines ... 17
10.2 Layout Example ... 18
10.3 Thermal Protection ... 18
11 Device and Documentation Support ... 19
11.1 Documentation Support ... 19
11.2 Community Resource ... 19
11.3 Trademarks ... 19
11.4 Electrostatic Discharge Caution ... 19
11.5 Glossary ... 19
12 Mechanical, Packaging, and Orderable Information ... 19

4 Revision History

NOTE: Page numbers for previous revisions may differ from page numbers in the current version.

Changes from Revision B (October 2014) to Revision C	Page
• Updated description for nFAULT pin.	3
• Removed the R_{VPROPI} component.	3
• Changed the *Functional Block Diagram* image	8
• Changed the *Typical Application* image	13
• Changed the *Layout Example* image	18

Changes from Original (September 2013) to Revision A	Page
• Added *Handling Rating* table, *Feature Description* section, *Device Functional Modes*, *Application and Implementation* section, *Power Supply Recommendations* section, *Layout* section, *Device and Documentation Support* section, and *Mechanical, Packaging, and Orderable Information* section	4
• Updated Figure 5	12

Copyright © 2013–2016, Texas Instruments Incorporated

5 Pin Configuration and Functions

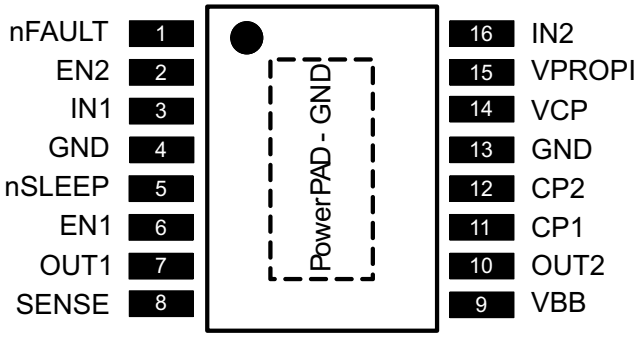

Pin Functions

PIN		TYPE	DESCRIPTION	
NAME	NO.			
POWER AND GROUND				
CP1	11	PWR	Charge pump switching node	Connect a 0.1-µF X7R capacitor rated for VBB between CP1 and CP2
CP2	12	—		
GND	4, 13, PPAD	PWR	Device ground	Connect to system ground
VBB	9	PWR	Power supply input	Connect to main power supply. Bypass to GND with a 0.1-µF ceramic capacitor and a larger bulk capacitor rated for at least the VBB voltage
VCP	14	PWR	Charge pump output	Connect a 0.1-µF 16-V ceramic capacitor between VCP and VBB
CONTROL				
EN1	6	I	½-H bridge enable	Logic high enables ½-H bridge output; logic low puts the FETs in HI-Z; internal pull-down
EN2	2			
IN1	3	I	½-H bridge control	Logic high enables the high-side ½-H bridge FET; logic low enables the low side FET; internal pull-down
IN2	16			
nFAULT	1	O	Fault indication pin	Pulled logic low with fault condition; open-drain output requires an external pull-up. This output is indeterminate in sleep mode
nSLEEP	5	I	Device sleep mode	Pull logic low to put device into a low-power sleep mode; internal pull-down
OUTPUT				
OUT1	7	O	½-H bridge output	
OUT2	10	O	½-H bridge output	
SENSE	8	O	H-bridge low-side connect	Connect directly to GND or through a sense resistor to set OCP
VPROPI				
VPROPI	15	O	Current-proportional output	

Table 1. External Components

COMPONENT	PIN 1	PIN 2	RECOMMENDED
C_{VBB}	VBB	GND	0.1-µF ceramic capacitor and a larger bulk capacitor rated for at least the VBB voltage
C_{VCP}	VCP	VBB	0.1-µF 16-V ceramic capacitor
R_{nFAULT}	VCC (1)	nFAULT	>1 kΩ resistor
R_{nSLEEP}	VCC (1)	nSLEEP	If nSLEEP isn't actively controlled, use a pull-up resistor of less than 20 kΩ
R_{SENSE}	SENSE	GND	Optional low-value resistor. If not used, connect SENSE pin directly to GND.

(1) VCC is not a pin on the DRV8816, but a VCC supply voltage pullup is required.

Copyright © 2013–2016, Texas Instruments Incorporated

6 Specifications

6.1 Absolute Maximum Ratings

over operating free-air temperature range (unless otherwise noted)[1]

		MIN	MAX	UNIT
VBB	Power supply voltage	–0.6	40	V
	Charge pump positive switching pin (CP2)	–0.6	VBB + 7	V
	Charge pump negative switching pin (CP1)	–0.6	VBB	V
	Digital pin voltage range (IN1, IN2, EN1, EN2, nSLEEP, nFAULT)	–0.3	7	V
	VBB to OUTx	–0.6	40	V
	OUTx to SENSE	–0.6	40	V
$V_{(SENSE)}$	Sense voltage (SENSE) [2]	–0.5	1.0	V
	H-bridge output current (OUT1, OUT2, SENSE)	0	2.8	A
	VPROPI pin voltage range (VPROPI)	–0.3	3.6	V
T_A	Operating ambient temperature	–40	85	°C
T_J	Operating junction temperature	–40	190	°C
T_{stg}	Storage temperature	–40	125	°C

(1) Stresses beyond those listed under *Absolute Maximum Ratings* may cause permanent damage to the device. These are stress ratings only, which do not imply functional operation of the device at these or any other conditions beyond those indicated under *Recommended Operating Conditions*. Exposure to absolute-maximum-rated conditions for extended periods may affect device reliability.
(2) Transients of ±1 V for less than 25 ns are acceptable.

6.2 ESD Ratings

			VALUE	UNIT
$V_{(ESD)}$	Electrostatic discharge	Human-body model (HBM), per ANSI/ESDA/JEDEC JS-001[1]	±2000	V
		Charged-device model (CDM), per JEDEC specification JESD22-C101[2]	±500	

(1) JEDEC document JEP155 states that 500-V HBM allows safe manufacturing with a standard ESD control process
(2) JEDEC document JEP157 states that 250-V CDM allows safe manufacturing with a standard ESD control process.

6.3 Recommended Operating Conditions

Power dissipation and thermal limits must be observed.

		MIN	MAX	UNIT
VBB	Power supply voltage	8	38	V
V_I	Input pin voltage	0	5.5	V
f_{PWM}	Applied PWM signal (IN1, IN2, EN1, EN2)		100	kHz
I_{OUT}	H-bridge output current		2.8	A
T_A	Ambient temperature	–40	85	°C

Copyright © 2013–2016, Texas Instruments Incorporated

6.4 Thermal Information

THERMAL METRIC[1]		DRV8816 PWP (HTSSOP) 16 PINS	UNIT
$R_{\theta JA}$	Junction-to-ambient thermal resistance[2]	43.9	°C/W
$R_{\theta JC(top)}$	Junction-to-case (top) thermal resistance[3]	30.8	°C/W
$R_{\theta JB}$	Junction-to-board thermal resistance[4]	25.3	°C/W
ψ_{JT}	Junction-to-top characterization parameter[5]	1.1	°C/W
ψ_{JB}	Junction-to-board characterization parameter[6]	25	°C/W
$R_{\theta JC(bot)}$	Junction-to-case (bottom) thermal resistance[7]	5.6	°C/W

(1) For more information about traditional and new thermal metrics, see the *IC Package Thermal Metrics* application report, SPRA953.
(2) The junction-to-ambient thermal resistance under natural convection is obtained in a simulation on a JEDEC-standard, high-K board, as specified in JESD51-7, in an environment described in JESD51-2a.
(3) The junction-to-case (top) thermal resistance is obtained by simulating a cold plate test on the package top. No specific JEDEC-standard test exists, but a close description can be found in the ANSI SEMI standard G30-88.
(4) The junction-to-board thermal resistance is obtained by simulating in an environment with a ring cold plate fixture to control the PCB temperature, as described in JESD51-8.
(5) The junction-to-top characterization parameter, ψ JT , estimates the junction temperature of a device in a real system and is extracted from the simulation data for obtaining θ JA , using a procedure described in JESD51-2a (sections 6 and 7).
(6) The junction-to-board characterization parameter, ψ JB , estimates the junction temperature of a device in a real system and is extracted from the simulation data for obtaining θ JA , using a procedure described in JESD51-2a (sections 6 and 7).
(7) The junction-to-case (bottom) thermal resistance is obtained by simulating a cold plate test on the exposed (power) pad. No specific JEDEC standard test exists, but a close description can be found in the ANSI SEMI standard G30-88.

6.5 Electrical Characteristics

over recommended operating conditions (unless otherwise noted)

PARAMETER		TEST CONDITIONS		MIN	TYP	MAX	UNIT
POWER SUPPLIES (VBB)							
VBB	VBB operating voltage			8		38	V
I_{VBB}	VBB operating supply current	f_{PWM} < 50 kHz			6		mA
		Charge pump on, Outputs disabled			3.2		mA
I_{VBBQ}	VBB sleep-mode supply current	nSLEEP = 0, T_J = 25°C				10	µA
CONTROL INPUTS (IN1, IN2, EN1, EN2, nSLEEP)							
V_{IL}	Input logic low voltage	IN1, IN2, EN1, EN2		0		0.8	V
V_{IH}	Input logic high voltage	IN1, IN2, EN1, EN2		2		5.5	V
V_{IL}	Input logic low voltage	nSLEEP		0		0.8	V
V_{IH}	Input logic high voltage	nSLEEP		2.2		5.5	V
I_{IL}	Input logic low current	IN1, IN2, EN2, nSLEEP	V_{IN} = 0 V		0		µA
I_{IH}	Input logic high current	IN1, IN2, EN2, nSLEEP	V_{IN} = 5 V		25		µA
I_{IL}	Input logic low current	EN1	V_{IN} = 0 V		0		µA
I_{IH}	Input logic high current	EN1	V_{IN} = 5 V		100		µA
R_{PD}	Pulldown resistance	IN1, IN2, EN2, nSLEEP			200		kΩ
		EN1			50		kΩ
SERIAL AND CONTROL OUTPUT (nFAULT)							
V_{OL}	Output logic low voltage	I_{sink} = 1 mA				0.4	V
DMOS DRIVERS (OUT1, OUT2, SENSE)							
$R_{DS(on)}$	Output ON resistance	Source driver, I_{OUT} = –2.8 A, T_J = 25°C			0.48		Ω
		Source driver, I_{OUT} = –2.8 A, T_J = 125°C			0.74	0.85	Ω
		Sink driver, I_{OUT} = –2.8 A, T_J = 25°C			0.35		Ω
		Sink driver, I_{OUT} = –2.8 A, T_J = 125°C			0.52	0.7	Ω
V_{TRIP}	SENSE trip voltage	R_{SENSE} between SENSE and GND			500		mV
V_f	Body diode forward voltage	Source diode, I_f = –2.8 A				1.4	V
		Sink diode, I_f = 2.8 A				1.4	V

Copyright © 2013–2016, Texas Instruments Incorporated

Electrical Characteristics (continued)

over recommended operating conditions (unless otherwise noted)

PARAMETER		TEST CONDITIONS	MIN	TYP	MAX	UNIT
t_{pd}	OUTx propagation delay	From High-Z to High		70		ns
		From High-Z to Low		700 (1)		
		From High to High-Z		120		
		From High to Low		700		
		From Low to High-Z		350		
		From Low to High		350		
t_{COD}	Crossover delay			500		ns
DAGain	VPROPI amplifier gain	Sense = 0.1 to 0.4 V		5		V/V
PROTECTION CIRCUITS						
V_{UVLO}	VBB UVLO	VBB rising		6.5	7.5	V
V_{CPUV}	VCP UVLO (2)	VBB rising; CPUV recovery		12	13.8	V
I_{OCP}	Overcurrent protection trip level		3			A
t_{DEG}	Overcurrent deglitch time			3.0		µs
t_{OCP}	Overcurrent retry time			1.6		ms
T_{OTW}	Thermal warning temperature	Die temperature T_j		160		°C
$T_{OTW\ HYS}$	Thermal warning hysteresis	Die temperature T_j		15		°C
T_{OTS}	Thermal shutdown temperature	Die temperature T_j		175		°C
$T_{OTS\ HYS}$	Thermal shutdown hysteresis	Die temperature T_j		15		°C

(1) If OUT2 is High, the typical time for OUT1 to go from High-Z to Low is 1700 ns.
(2) Whenever VCP is less than VM + 10 V, a CPUV event occurs. This fault will be asserted whenever VBB is below 12 V. Note that the H-bridges will remain enabled until VBB = V_{UVLO} even through nFAULT is pulled low.

6.6 Typical Characteristics

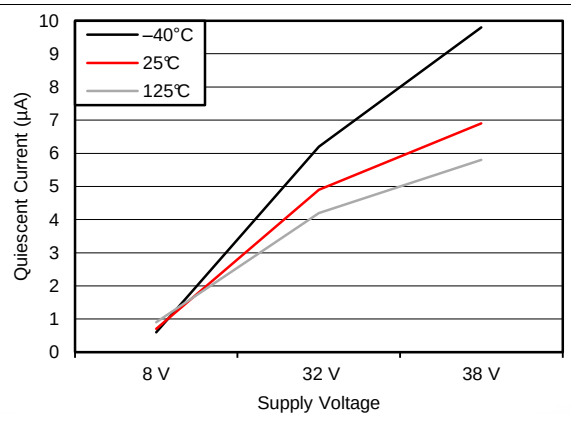

Figure 1. I_{VBBQ} vs VBB

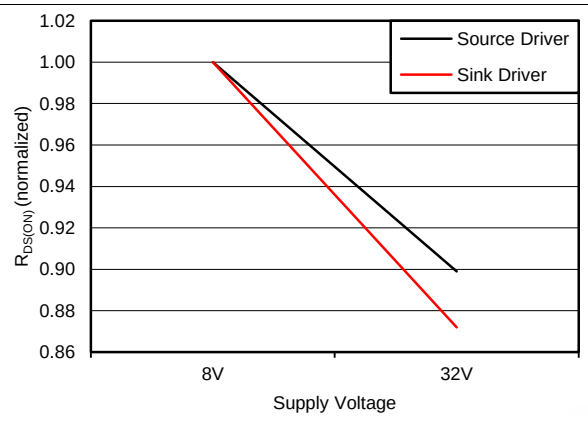

Figure 2. $R_{DS(ON)}$ vs VBB (normalized to VBB = 8V)

Copyright © 2013–2016, Texas Instruments Incorporated

Typical Characteristics (continued)

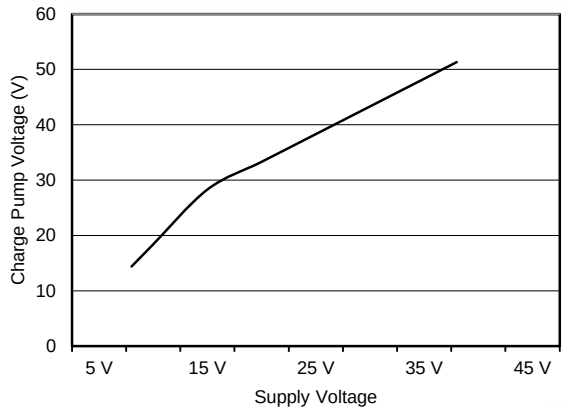

Figure 3. VCP vs VBB

7 Detailed Description

7.1 Overview

The DRV8816 uses 4 CMOS inputs to control 2 high-voltage high-current outputs, while integrating protection features, fault reporting, a sleep mode, and current sensing. EN1 and IN1 control OUT1, and EN2 and IN2 control OUT2, according to Table 2. The device is designed to drive two independent loads or one brushed DC motor, as shown in Figure 4 and Table 3.

When an R_{SENSE} resistor is used, the DRV8816 will automatically disable itself if V_{SENSE} exceeds 500mV—this provides a user-programmable overcurrent threshold. The VPROPI output equals the sense voltage amplified by a factor of 5, and it can be used by a microcontroller to know the motor current, in order to Pulse-Width Modulate the DRV8816 inputs and regulate motor current.

7.2 Functional Block Diagram

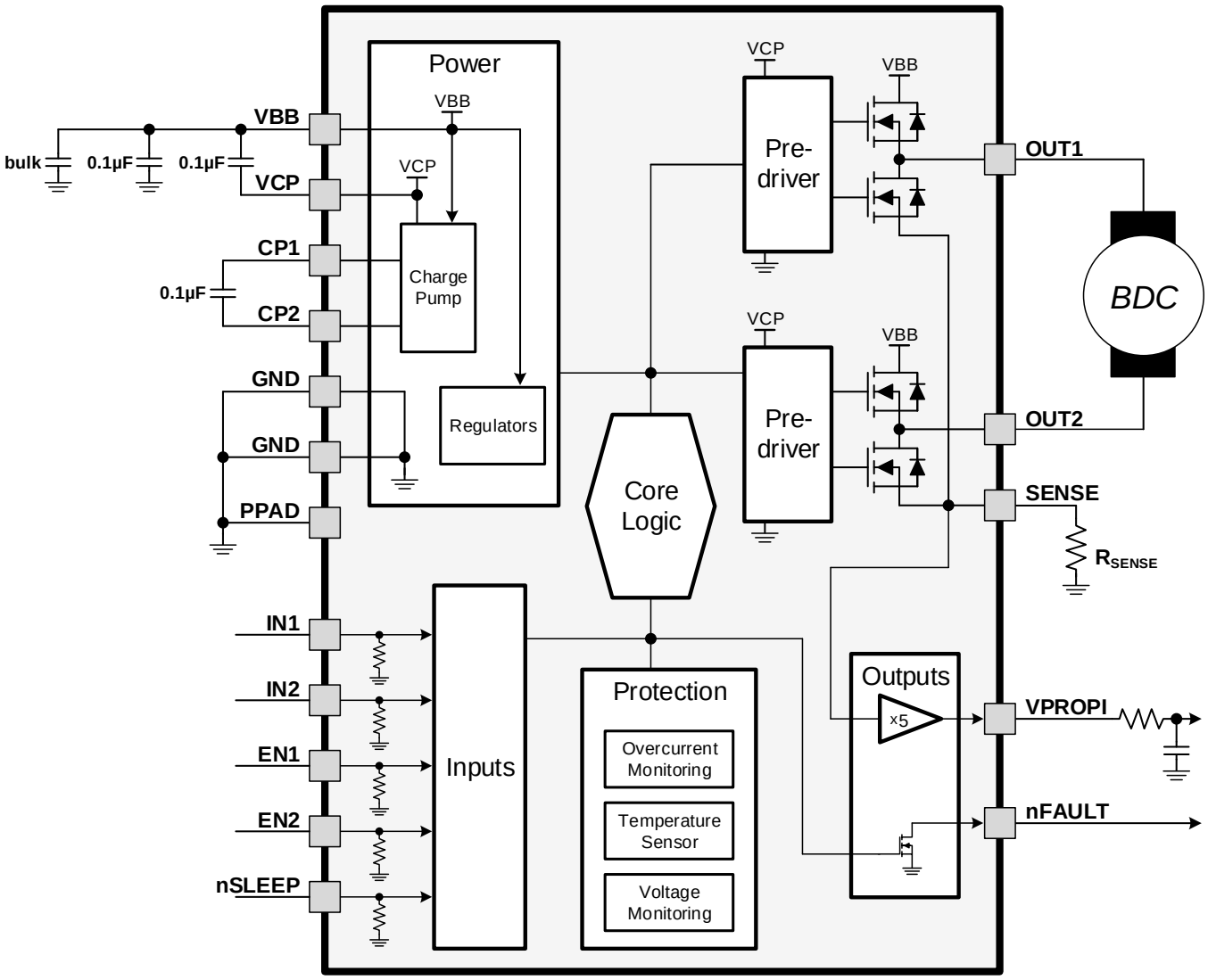

7.3 Feature Description

7.3.1 Bridge Control

The DRV8816 is controlled using separate enable and input pins for each ½-H-bridge.

Copyright © 2013–2016, Texas Instruments Incorporated

Feature Description (continued)

Table 2 shows the logic for the DRV8816.

Table 2. DRV8816 Logic

ENx	INx	OUTx
0	X	Z
1	0	L
1	1	H

If a single DC motor is connected to the DRV8816, it is connected between the OUT1 and OUT2 pins as shown in Figure 4. Two DC motors may also be connected to the DRV8816. In this mode, it is not possible to reverse the direction of the motors; the motors will turn only in one direction. The connections are shown in Figure 4.

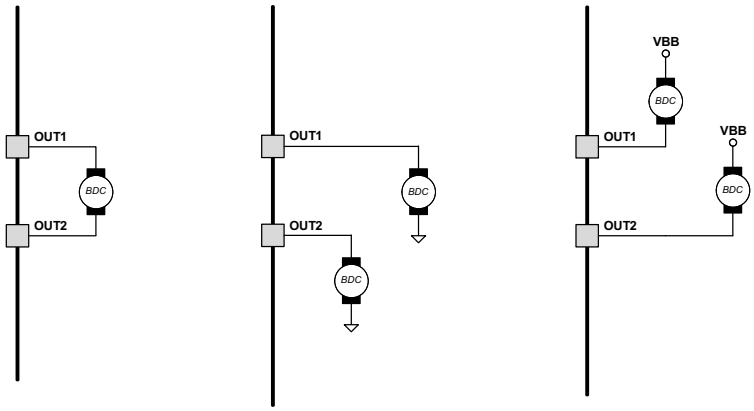

Figure 4. Bridge Control

Table 3 shows how motor operation for a single-brushed DC motor is controlled.

Table 3. Motor Operation for a Single-Brushed DC Motor

EN1	EN2	IN1	IN2	OUT1	OUT2	Operation
0	X	X	X	Z	X(1)	Off (coast)
X	0	X	X	X(1)	Z	Off (coast)
1	1	0	0	L	L	Brake
1	1	0	1	L	H	Reverse
1	1	1	0	H	L	Forward
1	1	1	1	H	H	Brake

(1) The Half-H bridges are independent; output state depends on ENx and INx.

Table 4 shows how motor operation for dual-brushed DC motors is controlled.

Table 4. Motor Operation for a Dual-Brushed DC Motor

	ENx	INx	OUTx	Operation
Motor connected to GND	0	X	Z	Off (coast)
	1	0	L	Brake
	1	1	H	Forward
	ENx	**INx**	**OUTx**	**Operation**
Motor connected to VBB	0	X	Z	Off (coast)
	1	0	L	Forward
	1	1	H	Brake

7.3.2 Charge Pump

The charge pump is used to generate a supply above VBB to drive the source-side DMOS gates. A 0.1-µF ceramic monolithic capacitor should be connected between CP1 and CP2 for pumping purposes. A 0.1-µF ceramic monolithic capacitor should be connected between VCP and VBB to act as a reservoir to run the high-side DMOS devices. The VCP voltage level is internally monitored, and in the case of a fault condition, the outputs of the device are disabled.

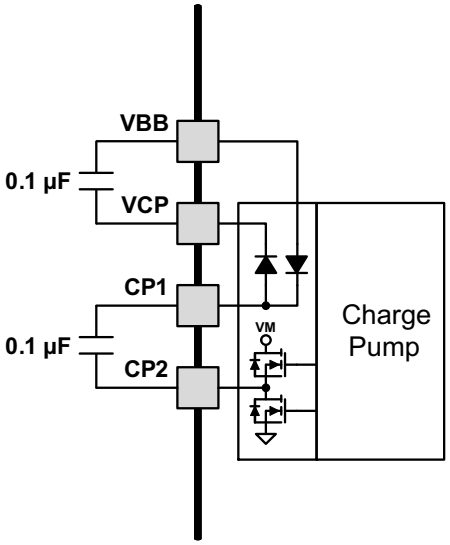

Figure 5. Charge Pump

7.3.3 VPROPI

The VPROPI output is equal to approximately 5× the voltage present on the SENSE pin. VPROPI is meaningful only if there is a resistor connected to the SENSE pin; If SENSE is connected to ground, VPROPI measures 0 V. Also note that during slow decay (brake), VPROPI measures 0 V. VPROPI can output a maximum of 2.5 V, because at 500 mV on SENSE, the H-bridge is disabled.

7.3.4 Protection Circuits

The DRV8816 is fully protected against VBB undervoltage, charge pump undervoltage, overcurrent, and overtemperature events.

7.3.4.1 VBB UVLO

If at any time the voltage on the VBB pin falls below the UVLO threshold voltage, all FETs in the H-bridge will be disabled and the charge pump will be disabled. Operation will resume when VBB rises above the UVLO threshold. Note that nFAULT does not indicate a UVLO because the CPUV fault is always asserted below VBB = 12 V.

7.3.4.2 VCP UVLO (CPUV)

During a CPUV event, the VCP voltage is measured to be below VCP + 10 V. If at any time the voltage on the VCP pin falls below the UVLO threshold voltage, the nFAULT pin is driven low. The nFAULT pin is released after operation has resumed. Note that this fault does not disable the output FETs and allows the device to continue operating. When VBB is below 12 V, this fault condition is always asserted and nFAULT is pulled low.

Copyright © 2013–2016, Texas Instruments Incorporated

7.3.4.3 OCP

The current flowing through the high-side and low-side drivers is monitored to ensure that the motor lead is not shorted to supply or ground. If a short is detected, all FETs in the H-bridge are disabled, nFAULT is driven low, and a t_{OCP} fault timer is started. After this period, t_{OCP}, the device is then allowed to follow the input commands and another turn-on is attempted (nFAULT becomes high again during this attempt). If there is still a fault condition, the cycle repeats. If after t_{OCP} expires it is determined the short condition is not present, normal operation resumes and nFAULT is released.

7.3.4.4 OTW

If the die temperature increases past the thermal warning threshold, the nFAULT pin is driven low. After the die temperature has fallen below the hysteresis level, the nFAULT pin is released. If the die temperature continues to increase, the device enters overtemperature shutdown as described in *OTS* .

7.3.4.5 OTS

If the die temperature exceeds safe limits, all FETs in the H-bridge are disabled and the charge pump is shut down. After the die temperature has fallen to a safe level, operation automatically resumes.

7.4 Device Functional Modes

7.4.1 SENSE

A low-value resistor can be placed between the SENSE pin and ground for current-sensing purposes. The PCB should be designed with wide metal paths on each side of the resistor, to minimize IR drop that would decrease sense accuracy. Likewise, the distance from the sense resistor to the DRV8816 and bulk capacitor should be minimized.

To set a manual overcurrent trip threshold, place a resistor between the SENSE pin and GND. When the SENSE pin rises above 500 mV, the H-bridge output is disabled (High-Z). The device will automatically retry with a period of t_{OCP}. The overcurrent trip threshold can be calculated using I_{TRIP} = 500 mV/Ω. The overcurrent trip level selected cannot be greater than I_{OCP}.

If a sense resistor is not used, tie the SENSE pin directly to GND; in that case, the I_{OCP} detection of current through the internal FETs still functions.

Device Functional Modes (continued)

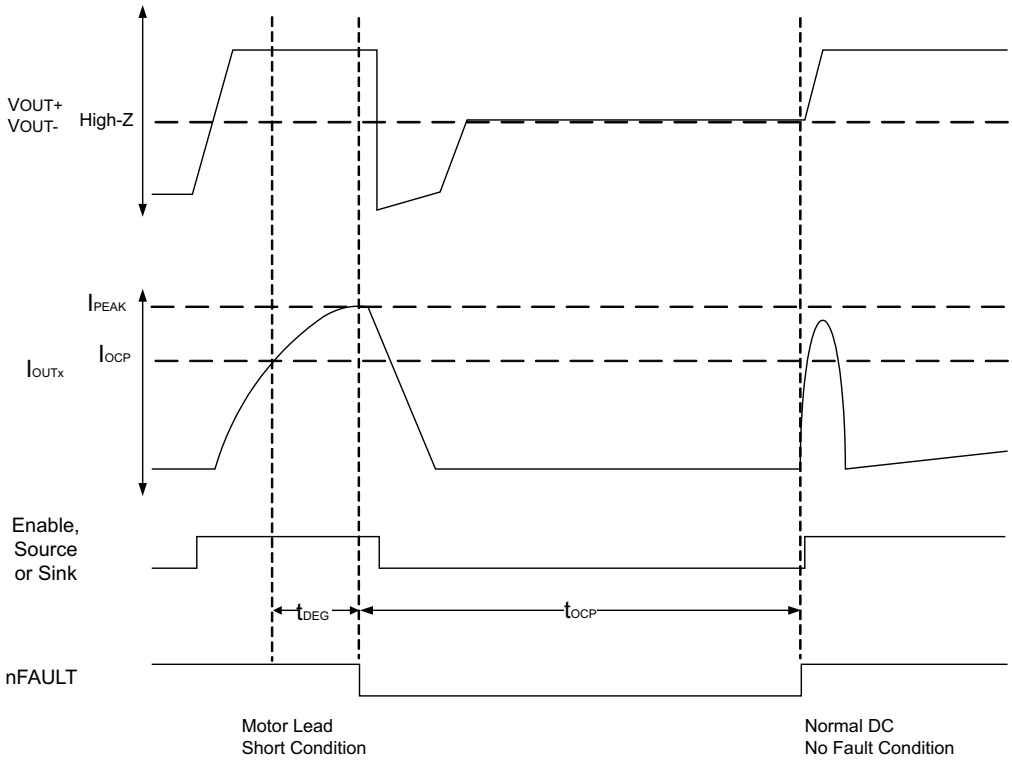

Figure 6. Overcurrent Threshold

Copyright © 2013–2016, Texas Instruments Incorporated

8 Application and Implementation

NOTE

Information in the following applications sections is not part of the TI component specification, and TI does not warrant its accuracy or completeness. TI's customers are responsible for determining suitability of components for their purposes. Customers should validate and test their design implementation to confirm system functionality.

8.1 Application Information

The DRV8816 is typically used to drive a brushed DC motor.

8.2 Typical Application

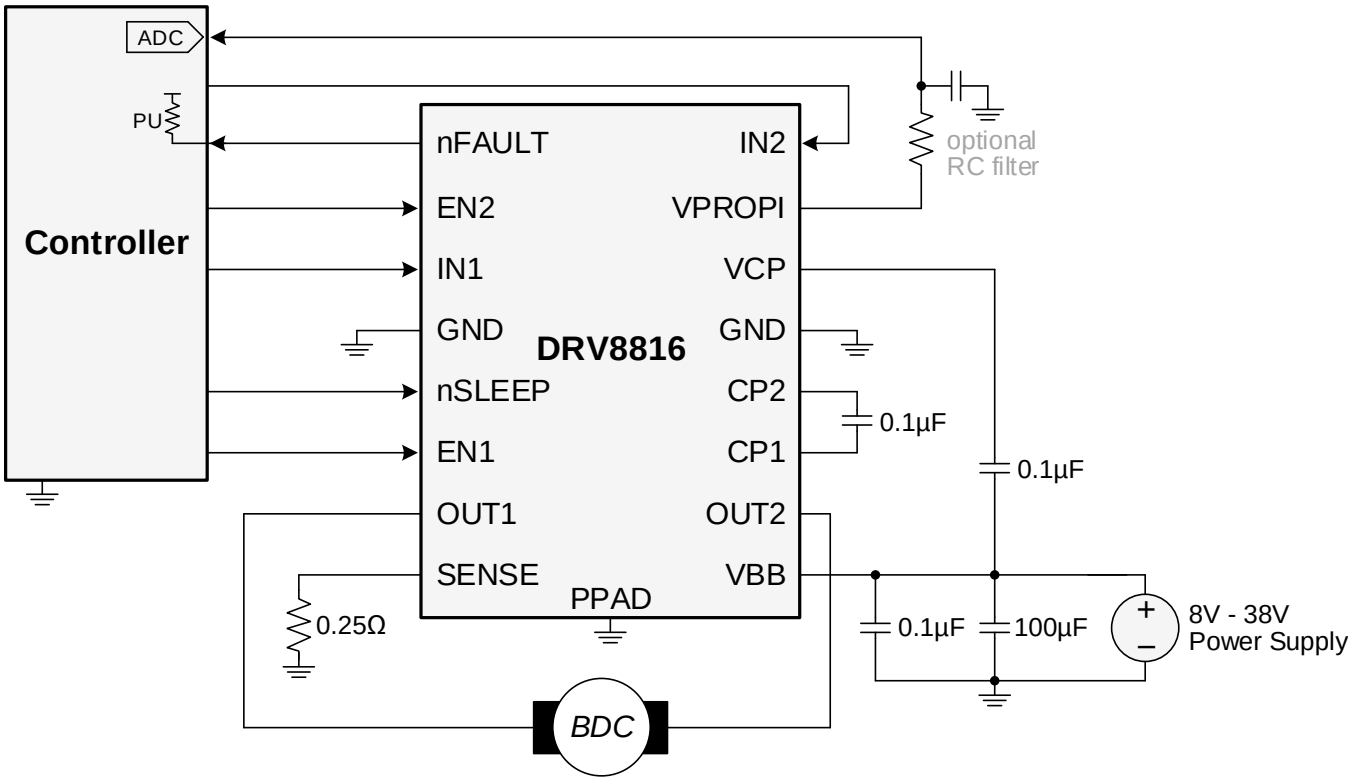

Figure 7. Typical Application

8.2.1 Design Requirements

Table 5 shows parameters to consider when designing.

Table 5. Design Parameters

DESIGN PARAMETER	REFERENCE	EXAMPLE VALUE
Motor voltage	V_{BB}	24 V
Motor RMS current	I_{RMS}	0.8 A
Motor startup current	I_{START}	2 A
Motor current trip point	I_{TRIP}	2.5 A

8.2.2 Detailed Design Procedure

8.2.2.1 Motor Voltage

The motor voltage to use will depend on the ratings of the motor selected and the desired RPM. A higher voltage spins a brushed DC motor faster with the same PWM duty cycle applied to the power FETs. A higher voltage also increases the rate of current change through the inductive motor windings.

8.2.2.2 Power Dissipation

The power dissipation of the DRV8816 is a function of RMS motor current and the each output's FET resistance ($R_{DS(ON)}$).

$$\text{Power} \approx I_{RMS}^2 \times (\text{High-Side } R_{DS(ON)} + \text{Low-Side } R_{DS(ON)}) \quad (1)$$

For this example, the ambient temperature is 35°C, and the junction temperature reaches 65°C. At 65°C, the sum of $R_{DS(ON)}$ is about 1Ω. With an example motor current of 0.8A, the dissipated power in the form of heat will be 0.8A² x 1Ω = 0.64W.

The temperature that the DRV8816 reaches will depend on the thermal resistance to the air and PCB. It is important to solder the device PowerPAD to the PCB ground plane, with vias to the top and bottom board layers, in order dissipate heat into the PCB and reduce the device temperature. In the example used here, the DRV8816 had an effective thermal resistance $R_{\theta JA}$ of 47°C/W, and:

$$T_J = T_A + (P_D \times R_{\theta JA}) = 35°C + (0.64W \times 47°C/W) = 65°C \quad (2)$$

8.2.2.3 Motor Current Trip Point

When the voltage on pin SENSE exceeds V_{TRIP} (0.5V), overcurrent is detected. The R_{SENSE} resistor should be sized to set the desired I_{TRIP} level.

$$R_{SENSE} = 0.5V / I_{TRIP} \quad (3)$$

To set I_{TRIP} to 2A, R_{SENSE} = 0.5V / 2A = 0.25Ω.

To prevent false trips, I_{TRIP} must be higher than regular operating current. Motor current during startup is typically much higher than steady-state spinning, because the initial load torque is higher, and the absence of back-EMF causes a higher voltage and extra current across the motor windings.

It can be beneficial to limit startup current by using series inductors on the DRV8816 output, as that allows I_{TRIP} to be lower, and it may decrease the system's required bulk capacitance. Startup current can also be limited by ramping the forward drive duty cycle.

8.2.2.4 Sense Resistor Selection

For optimal performance, it is important for the sense resistor to be:

- Surface-mount
- Low inductance
- Rated for high enough power
- Placed closely to the motor driver

The power dissipated by the sense resistor equals I_{RMS}^2 x R. For example, if peak motor current is 3A, RMS motor current is 2A, and a 0.05Ω sense resistor is used, the resistor will dissipate 2A² x 0.05Ω = 0.2W. The power quickly increases with higher current levels.

Resistors typically have a rated power within some ambient temperature range, along with a de-rated power curve for high ambient temperatures. When a PCB is shared with other components generating heat, margin should be added. It is always best to measure the actual sense resistor temperature in a final system, along with the power MOSFETs, as those are often the hottest components.

Because power resistors are larger and more expensive than standard resistors, it is common practice to use multiple standard resistors in parallel, between the sense node and ground. This distributes the current and heat dissipation.

Copyright © 2013–2016, Texas Instruments Incorporated

8.2.3 Application Curves

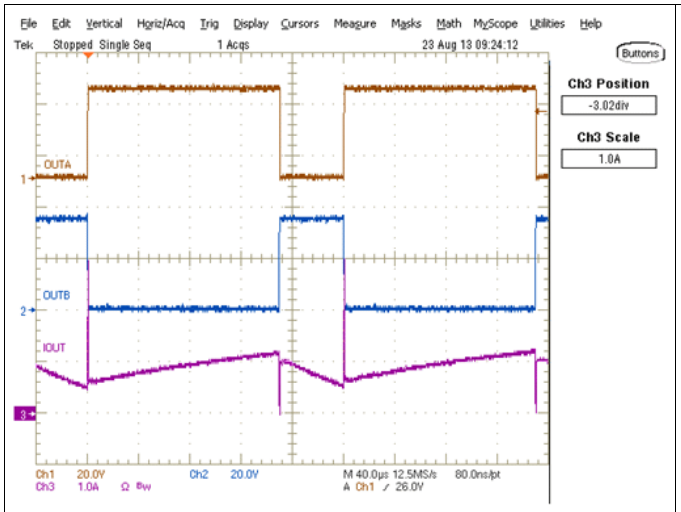

Figure 8. Forward Drive, Fast Decay

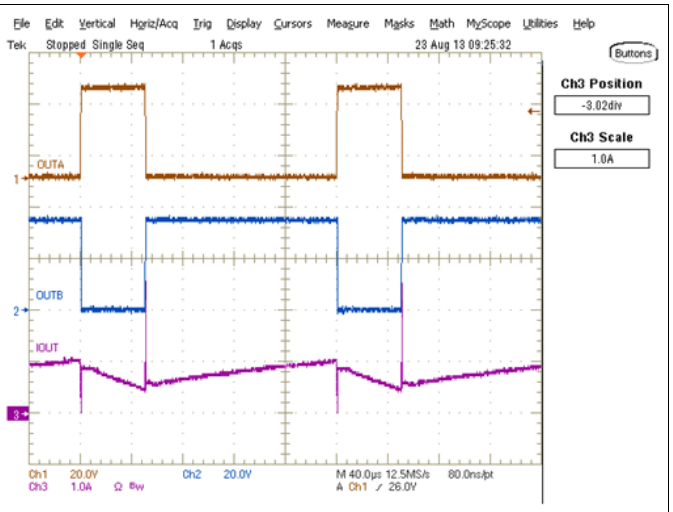

Figure 9. Reverse Drive, Fast Decay

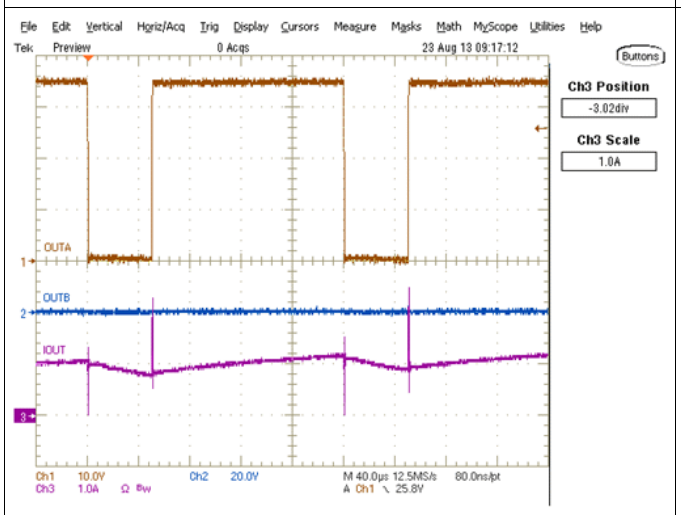

Figure 10. Forward Drive, Slow Decay

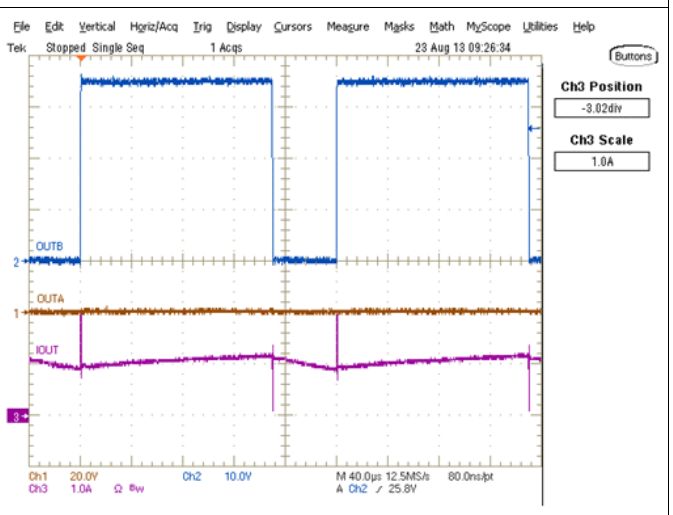

Figure 11. Reverse Drive, Slow Decay

9 Power Supply Recommendations

9.1 Bulk Capacitance

Having appropriate local bulk capacitance is an important factor in motor drive system design. It is generally beneficial to have more bulk capacitance, while the disadvantages are increased cost and physical size.

The amount of local capacitance needed depends on a variety of factors, including:

- The highest current required by the motor system.
- The power supply's capacitance and ability to source current.
- The amount of parasitic inductance between the power supply and motor systems.
- The acceptable voltage ripple.
- The type of motor used (Brushed DC, Brushless DC, Stepper).
- The motor braking method.

The inductance between the power supply and motor drive system will limit the rate current can change from the power supply. If the local bulk capacitance is too small, the system will respond to excessive current demands or dumps from the motor with a change in voltage. When adequate bulk capacitance is used, the motor voltage remains stable and high current can be quickly supplied.

The datasheet generally provides a recommended value, but system-level testing is required to determine the appropriate sized bulk capacitor.

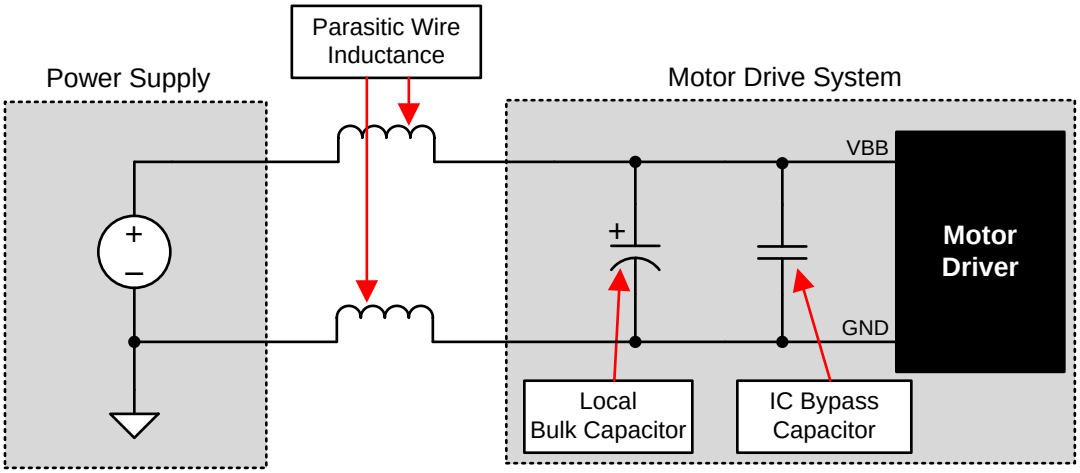

Figure 12. Example Setup of Motor Drive System with External Power Supply

9.2 Power Supervisor

Control input nSLEEP is used to minimize power consumption when the DRV8816 is not in use. This disables much of the internal circuitry, including the internal voltage rails and charge pump. nSLEEP is asserted low. A logic high on this input pin results in normal operation. When switching from low to high, the user should allow a 1-ms delay before applying PWM signals. This time is needed for the charge pump to stabilize.

Copyright © 2013–2016, Texas Instruments Incorporated

10 Layout

10.1 Layout Guidelines

The printed circuit board (PCB) should use a heavy ground plane. For optimum electrical and thermal performance, the DRV8816 must be soldered directly onto the board. On the underside of the DRV8816 is a thermal pad, which provides a path for enhanced thermal dissipation. The thermal pad should be soldered directly to an exposed surface on the PCB. Thermal vias are used to transfer heat to other layers of the PCB.

The load supply pin, VBB, should be decoupled with an electrolytic capacitor (typically 100 µF) in parallel with a ceramic capacitor placed as close as possible to the device. The ceramic capacitors between VCP and VBB, connected to VREG, and between CP1 and CP2 should be as close to the pins of the device as possible, in order to minimize lead inductance.

$$P_{TOT} = R_{DS(ON)} \times (I_{OUT(RMS)})^2$$

where

- P_{TOT} is the total power dissipation.
- $R_{DS(ON)}$ is the resistance of the HS plus LS FETS.
- $I_{OUT(RMS)}$ is the RMS output current being applied to each winding. (4)

The voltage rating for bulk capacitors should be higher than the operating voltage, to provide margin for cases when the motor transfers energy to the supply.

$I_{OUT(RMS)}$ is equal to approximately 0.7× the full-scale output current setting.

The maximum amount of power that can be dissipated in the device is dependent on ambient temperature and heatsinking.

Note that $R_{DS(ON)}$ increases with temperature, so as the device heats, the power dissipation increases.

10.1.1 Ground

A ground power plane should be located as close to DRV8816 as possible. The copper ground plane directly under the thermal pad makes a good location. This pad can then be connected to ground for this purpose.

10.2 Layout Example

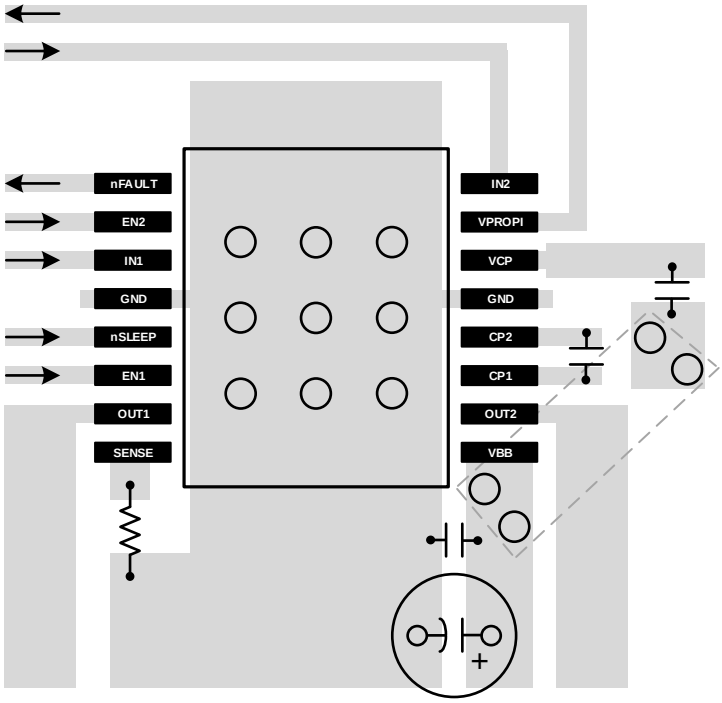

Figure 13. DRV8816 Layout Example

10.3 Thermal Protection

If the die temperature exceeds approximately 150°C, the device is disabled until the temperature drops to a safe level. Any tendency of the device to enter thermal shutdown is an indication of either excessive power dissipation, insufficient heatsinking, or too high an ambient temperature.

Copyright © 2013–2016, Texas Instruments Incorporated

11 Device and Documentation Support

11.1 Documentation Support

11.1.1 Related Documentation

For related documentation see the following:

- *DRV8816 Evaluation Module*, SLVU971
- *Shelf-Life Evaluation of Lead-Free Component Finishes*, SZZA046

11.2 Community Resource

The following links connect to TI community resources. Linked contents are provided "AS IS" by the respective contributors. They do not constitute TI specifications and do not necessarily reflect TI's views; see TI's Terms of Use.

TI E2E™ Online Community ***TI's Engineer-to-Engineer (E2E) Community.*** Created to foster collaboration among engineers. At e2e.ti.com, you can ask questions, share knowledge, explore ideas and help solve problems with fellow engineers.

Design Support ***TI's Design Support*** Quickly find helpful E2E forums along with design support tools and contact information for technical support.

11.3 Trademarks

PowerPAD, E2E are trademarks of Texas Instruments.
All other trademarks are the property of their respective owners.

11.4 Electrostatic Discharge Caution

These devices have limited built-in ESD protection. The leads should be shorted together or the device placed in conductive foam during storage or handling to prevent electrostatic damage to the MOS gates.

11.5 Glossary

SLYZ022 — *TI Glossary*.

This glossary lists and explains terms, acronyms, and definitions.

12 Mechanical, Packaging, and Orderable Information

The following pages include mechanical, packaging, and orderable information. This information is the most current data available for the designated devices. This data is subject to change without notice and revision of this document. For browser-based versions of this data sheet, refer to the left-hand navigation.

PACKAGING INFORMATION

Orderable Device	Status (1)	Package Type	Package Drawing	Pins	Package Qty	Eco Plan (2)	Lead finish/ Ball material (6)	MSL Peak Temp (3)	Op Temp (°C)	Device Marking (4/5)	Samples
DRV8816PWP	ACTIVE	HTSSOP	PWP	16	90	RoHS & Green	NIPDAU	Level-3-260C-168 HR	-40 to 85	DRV8816	Samples
DRV8816PWPR	ACTIVE	HTSSOP	PWP	16	2000	RoHS & Green	NIPDAU	Level-3-260C-168 HR	-40 to 85	DRV8816	Samples

(1) The marketing status values are defined as follows:
ACTIVE: Product device recommended for new designs.
LIFEBUY: TI has announced that the device will be discontinued, and a lifetime-buy period is in effect.
NRND: Not recommended for new designs. Device is in production to support existing customers, but TI does not recommend using this part in a new design.
PREVIEW: Device has been announced but is not in production. Samples may or may not be available.
OBSOLETE: TI has discontinued the production of the device.

(2) **RoHS:** TI defines "RoHS" to mean semiconductor products that are compliant with the current EU RoHS requirements for all 10 RoHS substances, including the requirement that RoHS substance do not exceed 0.1% by weight in homogeneous materials. Where designed to be soldered at high temperatures, "RoHS" products are suitable for use in specified lead-free processes. TI may reference these types of products as "Pb-Free".
RoHS Exempt: TI defines "RoHS Exempt" to mean products that contain lead but are compliant with EU RoHS pursuant to a specific EU RoHS exemption.
Green: TI defines "Green" to mean the content of Chlorine (Cl) and Bromine (Br) based flame retardants meet JS709B low halogen requirements of <=1000ppm threshold. Antimony trioxide based flame retardants must also meet the <=1000ppm threshold requirement.

(3) MSL, Peak Temp. - The Moisture Sensitivity Level rating according to the JEDEC industry standard classifications, and peak solder temperature.

(4) There may be additional marking, which relates to the logo, the lot trace code information, or the environmental category on the device.

(5) Multiple Device Markings will be inside parentheses. Only one Device Marking contained in parentheses and separated by a "~" will appear on a device. If a line is indented then it is a continuation of the previous line and the two combined represent the entire Device Marking for that device.

(6) Lead finish/Ball material - Orderable Devices may have multiple material finish options. Finish options are separated by a vertical ruled line. Lead finish/Ball material values may wrap to two lines if the finish value exceeds the maximum column width.

Important Information and Disclaimer: The information provided on this page represents TI's knowledge and belief as of the date that it is provided. TI bases its knowledge and belief on information provided by third parties, and makes no representation or warranty as to the accuracy of such information. Efforts are underway to better integrate information from third parties. TI has taken and continues to take reasonable steps to provide representative and accurate information but may not have conducted destructive testing or chemical analysis on incoming materials and chemicals. TI and TI suppliers consider certain information to be proprietary, and thus CAS numbers and other limited information may not be available for release.

In no event shall TI's liability arising out of such information exceed the total purchase price of the TI part(s) at issue in this document sold by TI to Customer on an annual basis.

TAPE AND REEL INFORMATION

REEL DIMENSIONS

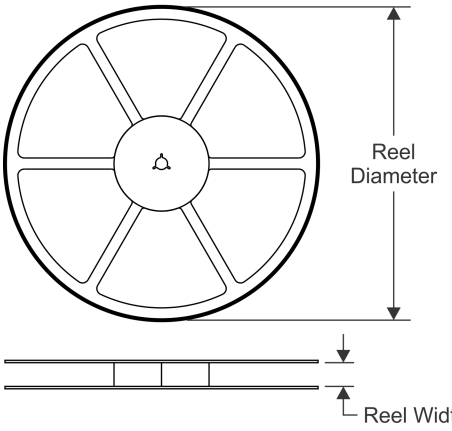

TAPE DIMENSIONS

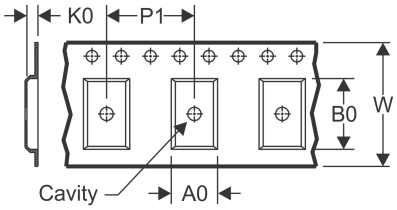

A0	Dimension designed to accommodate the component width
B0	Dimension designed to accommodate the component length
K0	Dimension designed to accommodate the component thickness
W	Overall width of the carrier tape
P1	Pitch between successive cavity centers

QUADRANT ASSIGNMENTS FOR PIN 1 ORIENTATION IN TAPE

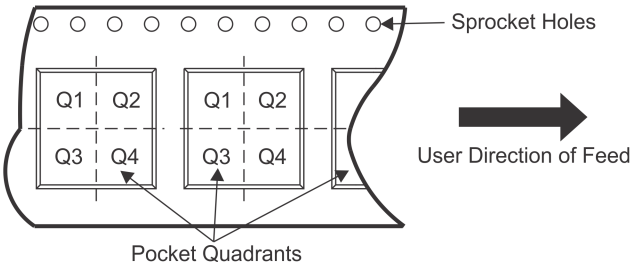

*All dimensions are nominal

Device	Package Type	Package Drawing	Pins	SPQ	Reel Diameter (mm)	Reel Width W1 (mm)	A0 (mm)	B0 (mm)	K0 (mm)	P1 (mm)	W (mm)	Pin1 Quadrant
DRV8816PWPR	HTSSOP	PWP	16	2000	330.0	12.4	6.9	5.6	1.6	8.0	12.0	Q1

TAPE AND REEL BOX DIMENSIONS

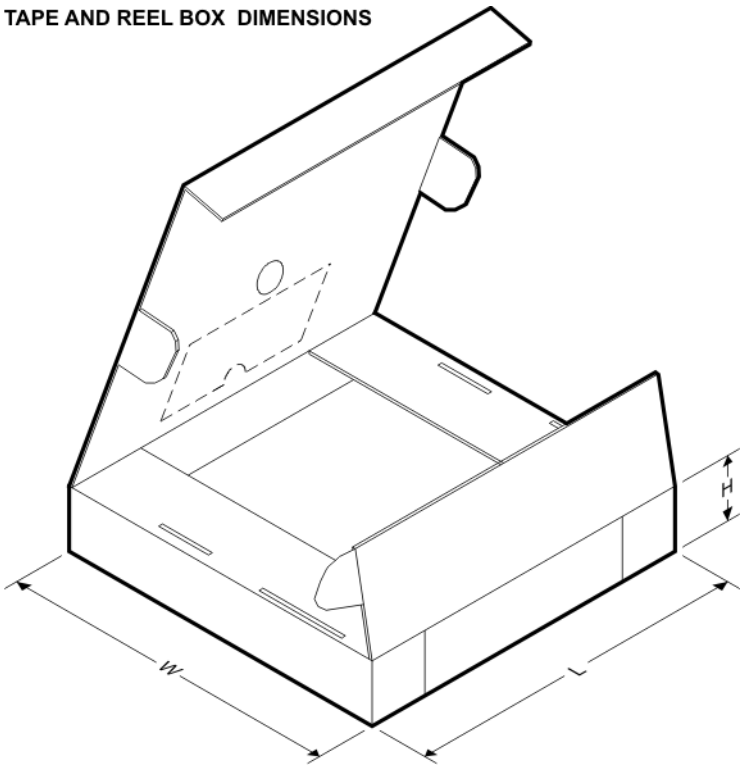

*All dimensions are nominal

Device	Package Type	Package Drawing	Pins	SPQ	Length (mm)	Width (mm)	Height (mm)
DRV8816PWPR	HTSSOP	PWP	16	2000	350.0	350.0	43.0

TUBE

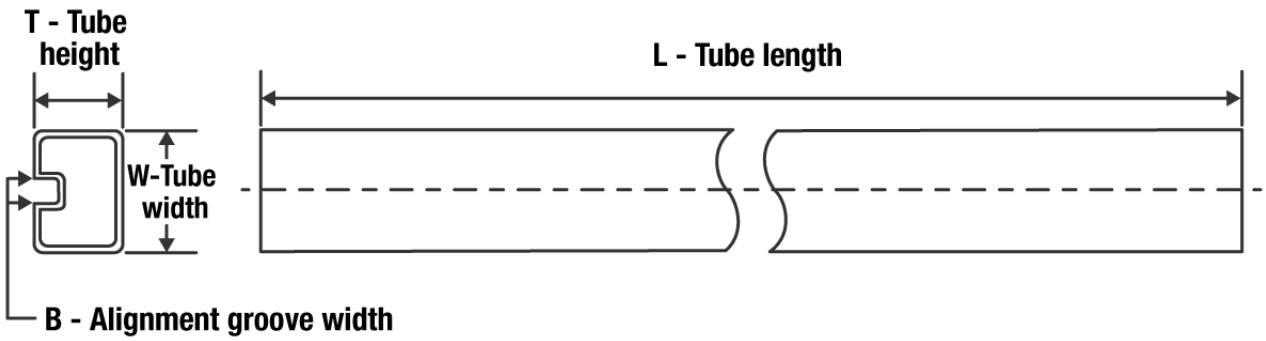

*All dimensions are nominal

Device	Package Name	Package Type	Pins	SPQ	L (mm)	W (mm)	T (µm)	B (mm)
DRV8816PWP	PWP	HTSSOP	16	90	530	10.2	3600	3.5

PWP 16 PowerPAD™ TSSOP - 1.2 mm max height

PLASTIC SMALL OUTLINE

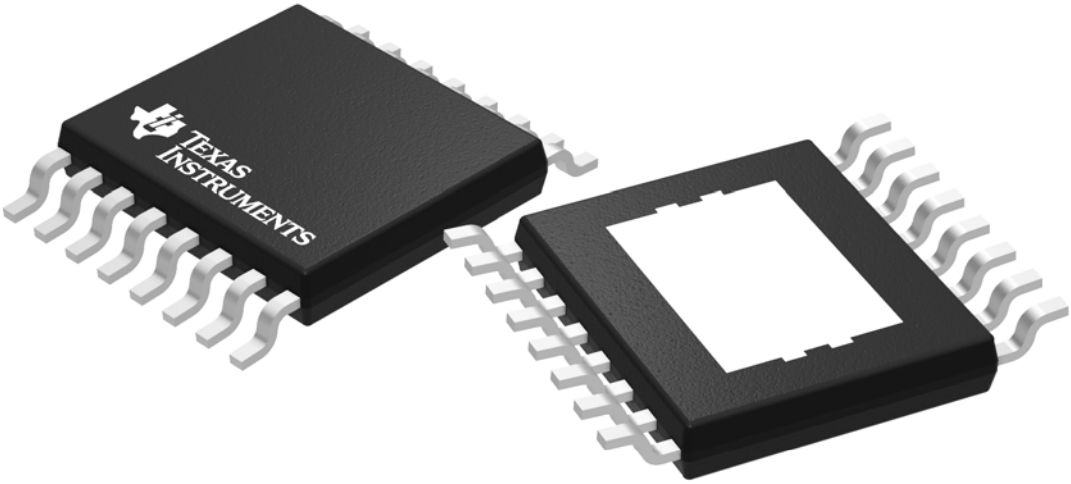

Images above are just a representation of the package family, actual package may vary.
Refer to the product data sheet for package details.

4073225-3/J

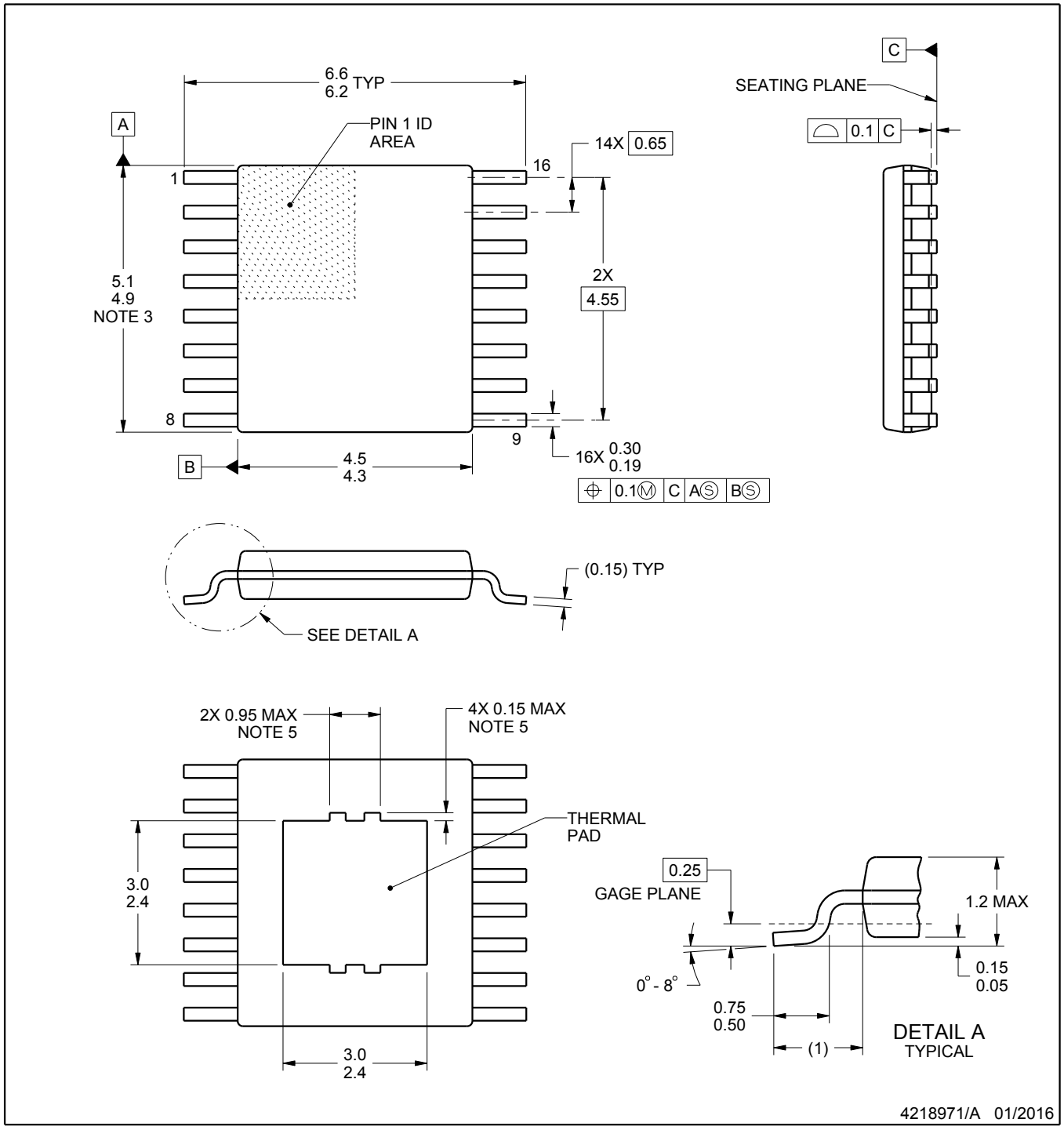

PowerPAD is a trademark of Texas Instruments.

NOTES:

1. All linear dimensions are in millimeters. Any dimensions in parenthesis are for reference only. Dimensioning and tolerancing per ASME Y14.5M.
2. This drawing is subject to change without notice.
3. This dimension does not include mold flash, protrusions, or gate burrs. Mold flash, protrusions, or gate burrs shall not exceed 0.15 mm per side.
4. Reference JEDEC registration MO-153.
5. Features may not be present.

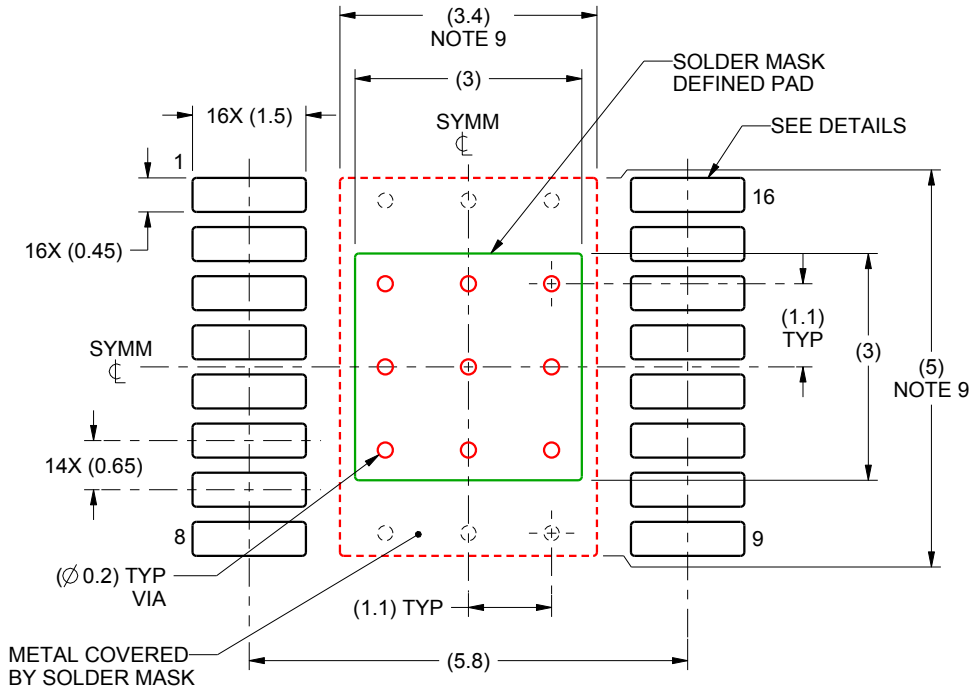

LAND PATTERN EXAMPLE
SCALE:10X

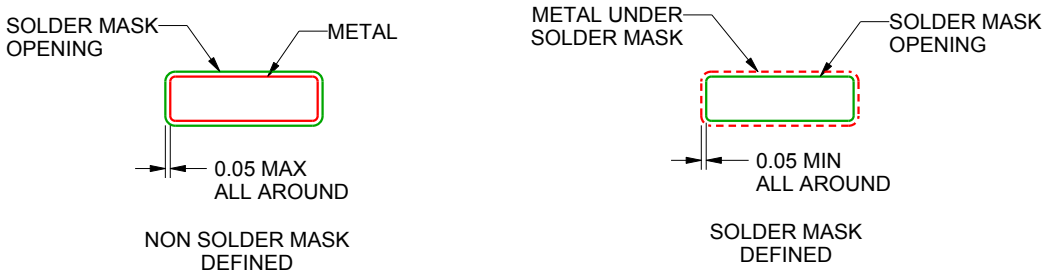

SOLDER MASK DETAILS
PADS 1-16

4218971/A 01/2016

NOTES: (continued)

6. Publication IPC-7351 may have alternate designs.
7. Solder mask tolerances between and around signal pads can vary based on board fabrication site.
8. This package is designed to be soldered to a thermal pad on the board. For more information, see Texas Instruments literature numbers SLMA002 (www.ti.com/lit/slma002) and SLMA004 (www.ti.com/lit/slma004).
9. Size of metal pad may vary due to creepage requirement.

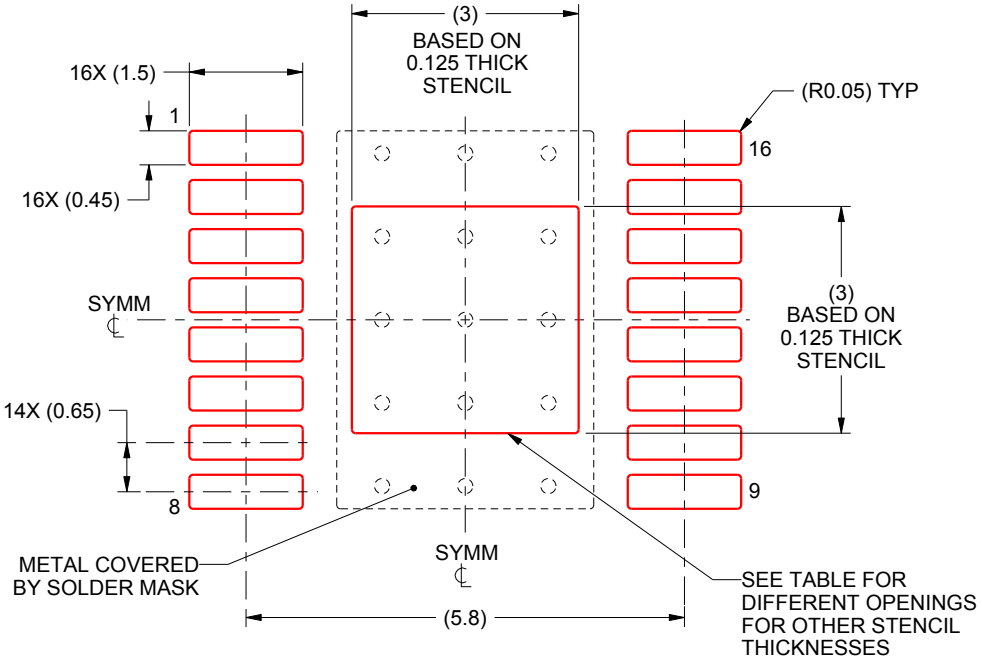

SOLDER PASTE EXAMPLE
EXPOSED PAD
100% PRINTED SOLDER COVERAGE BY AREA
SCALE:10X

STENCIL THICKNESS	SOLDER STENCIL OPENING
0.1	3.35 X 3.35
0.125	3 X 3 (SHOWN)
0.15	2.74 X 2.74
0.175	2.54 X 2.54

4218971/A 01/2016

NOTES: (continued)

10. Laser cutting apertures with trapezoidal walls and rounded corners may offer better paste release. IPC-7525 may have alternate design recommendations.
11. Board assembly site may have different recommendations for stencil design.

IMPORTANT NOTICE AND DISCLAIMER

TI PROVIDES TECHNICAL AND RELIABILITY DATA (INCLUDING DATA SHEETS), DESIGN RESOURCES (INCLUDING REFERENCE DESIGNS), APPLICATION OR OTHER DESIGN ADVICE, WEB TOOLS, SAFETY INFORMATION, AND OTHER RESOURCES “AS IS” AND WITH ALL FAULTS, AND DISCLAIMS ALL WARRANTIES, EXPRESS AND IMPLIED, INCLUDING WITHOUT LIMITATION ANY IMPLIED WARRANTIES OF MERCHANTABILITY, FITNESS FOR A PARTICULAR PURPOSE OR NON-INFRINGEMENT OF THIRD PARTY INTELLECTUAL PROPERTY RIGHTS.

These resources are intended for skilled developers designing with TI products. You are solely responsible for (1) selecting the appropriate TI products for your application, (2) designing, validating and testing your application, and (3) ensuring your application meets applicable standards, and any other safety, security, regulatory or other requirements.

These resources are subject to change without notice. TI grants you permission to use these resources only for development of an application that uses the TI products described in the resource. Other reproduction and display of these resources is prohibited. No license is granted to any other TI intellectual property right or to any third party intellectual property right. TI disclaims responsibility for, and you will fully indemnify TI and its representatives against, any claims, damages, costs, losses, and liabilities arising out of your use of these resources.

TI’s products are provided subject to TI’s Terms of Sale or other applicable terms available either on ti.com or provided in conjunction with such TI products. TI’s provision of these resources does not expand or otherwise alter TI’s applicable warranties or warranty disclaimers for TI products.

TI objects to and rejects any additional or different terms you may have proposed.

Mailing Address: Texas Instruments, Post Office Box 655303, Dallas, Texas 75265
Copyright © 2022, Texas Instruments Incorporated