SINGLE INVERTER GATE

Check for Samples: SN74LVC1G04-Q1

FEATURES

- **Qualified for Automotive Applications**
- **AEC-Q100 Qualified with the Following Results**
  - **Device Temperature Grade 1: –40°C to 125°C Ambient Operating Temperature Range**
  - **Device HBM ESD Classification Level H2**
  - **Device CDM ESG Classification Level C4B**
- **ESD Protection Exceeds 2000 V Per MIL-STD-883, Method 3015; Exceeds 200 V Using Machine Model (C = 200 pF, R = 0)**
- **Supports 5-V V_{CC} Operation**
- **Inputs Accept Voltages to 5.5 V**
- **Max t_{pd} of 3.3 ns at 3.3 V**
- **Low Power Consumption, 10-µA Max I_{CC}**
- **±24-mA Output Drive at 3.3 V**
- **I_{off} Supports Partial-Power-Down Mode Operation**
- **Latch-Up Performance Exceeds 100 mA Per JESD 78, Class II**

DBV PACKAGE (TOP VIEW)

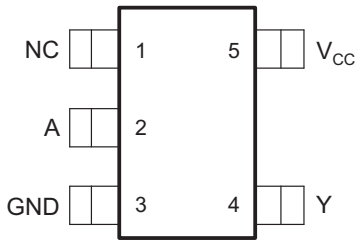

DCK PACKAGE (TOP VIEW)

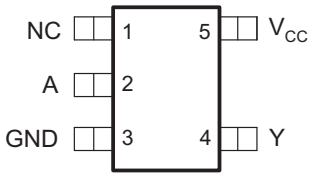

See mechanical drawings for dimensions.
NC - No internal connection

DESCRIPTION AND ORDERING INFORMATION

This single inverter gate is designed for 1.65-V to 5.5-V V_{CC} operation.

The SN74LVC1G04 performs the Boolean function $Y = \overline{A}$.

This device is fully specified for partial-power-down applications using I_{off}. The I_{off} circuitry disables the outputs, preventing damaging current backflow through the device when it is powered down.

ORDERING INFORMATION(1)

T_A	PACKAGE(2)		ORDERABLE PART NUMBER	TOP-SIDE MARKING(3)
–40°C to 125°C	SOT (SOT-23) – DBV	Reel of 3000	SN74LVC1G04QDBVRQ1	C04_
	SOT (SC-70) – DCK	Reel of 3000	SN74LVC1G04QDCKRQ1	CC_
–40°C to 85°C	SOT (SC-70) – DCK	Reel of 3000	SN74LVC1G04IDCKRQ1	CC_

(1) For the most current package and ordering information, see the Package Option Addendum at the end of this document, or see the TI web site at www.ti.com.
(2) Package drawings, thermal data, and symbolization are available at www.ti.com/packaging.
(3) DBV/DCK: The actual top-side marking has one additional character that designates the wafer fab/assembly site.

FUNCTION TABLE

INPUT A	OUTPUT Y
H	L
L	H

Please be aware that an important notice concerning availability, standard warranty, and use in critical applications of Texas Instruments semiconductor products and disclaimers thereto appears at the end of this data sheet.

PRODUCTION DATA information is current as of publication date. Products conform to specifications per the terms of the Texas Instruments standard warranty. Production processing does not necessarily include testing of all parameters.

Copyright © 2003–2013, Texas Instruments Incorporated

LOGIC DIAGRAM (POSITIVE LOGIC)

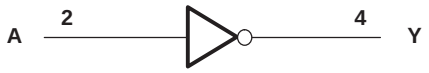

Absolute Maximum Ratings[1]

over operating free-air temperature range (unless otherwise noted)

			MIN	MAX	UNIT
V_{CC}	Supply voltage range		–0.5	6.5	V
V_I	Input voltage range[2]		–0.5	6.5	V
V_O	Voltage range applied to any output in the high-impedance or power-off state[2]		–0.5	6.5	V
V_O	Voltage range applied to any output in the high or low state[2] [3]		–0.5	V_{CC} + 0.5	V
I_{IK}	Input clamp current	$V_I < 0$		–50	mA
I_{OK}	Output clamp current	$V_O < 0$		–50	mA
I_O	Continuous output current			±50	mA
	Continuous current through V_{CC} or GND			±100	mA
θ_{JA}	Package thermal impedance[4]	DBV package		206	°C/W
		DCK package		252	
T_{stg}	Storage temperature range		–65	150	°C
ESD rating	Human-body model (HBM) AEC-Q100 classification level H2			2	kV
	Charged-device model (CDM) AEC-Q100 classification level C4B			750	V

(1) Stresses beyond those listed under "absolute maximum ratings" may cause permanent damage to the device. These are stress ratings only, and functional operation of the device at these or any other conditions beyond those indicated under "recommended operating conditions" is not implied. Exposure to absolute-maximum-rated conditions for extended periods may affect device reliability.
(2) The input negative-voltage and output voltage ratings may be exceeded if the input and output current ratings are observed.
(3) The value of V_{CC} is provided in the recommended operating conditions table.
(4) The package thermal impedance is calculated in accordance with JESD 51-7.

Copyright © 2003–2013, Texas Instruments Incorporated

Recommended Operating Conditions[(1)]

			MIN	MAX	UNIT
V_{CC}	Supply voltage	Operating	1.65	5.5	V
		Data retention only	1.5		
V_{IH}	High-level input voltage	V_{CC} = 1.65 V to 1.95 V	0.65 × V_{CC}		V
		V_{CC} = 2.3 V to 2.7 V	1.7		
		V_{CC} = 3 V to 3.6 V	2		
		V_{CC} = 4.5 V to 5.5 V	0.7 × V_{CC}		
V_{IL}	Low-level input voltage	V_{CC} = 1.65 V to 1.95 V		0.35 × V_{CC}	V
		V_{CC} = 2.3 V to 2.7 V		0.7	
		V_{CC} = 3 V to 3.6 V		0.8	
		V_{CC} = 4.5 V to 5.5 V		0.3 × V_{CC}	
V_I	Input voltage		0	5.5	V
V_O	Output voltage		0	V_{CC}	V
I_{OH}	High-level output current	V_{CC} = 1.65 V		–4	mA
		V_{CC} = 2.3 V		–8	
		V_{CC} = 3 V		–16	
				–24	
		V_{CC} = 4.5 V		–32	
I_{OL}	Low-level output current	V_{CC} = 1.65 V		4	mA
		V_{CC} = 2.3 V		8	
		V_{CC} = 3 V		16	
				24	
		V_{CC} = 4.5 V		32	
Δt/Δv	Input transition rise or fall rate	V_{CC} = 1.8 V ± 0.15 V, 2.5 V ± 0.2 V		20	ns/V
		V_{CC} = 3.3 V ± 0.3 V		10	
		V_{CC} = 5 V ± 0.5 V		5	
T_A	Operating free-air temperature	Q-suffix device	–40	125	°C
		I-suffix device	–40	85	

(1) All unused inputs of the device must be held at V_{CC} or GND to ensure proper device operation. Refer to the TI application report, *Implications of Slow or Floating CMOS Inputs*, literature number SCBA004.

Copyright © 2003–2013, Texas Instruments Incorporated

Electrical Characteristics

over recommended operating free-air temperature range (unless otherwise noted)

PARAMETER		TEST CONDITIONS	V_{CC}	MIN	TYP(1)	MAX	UNIT
V_{OH}		I_{OH} = –100 µA	1.65 V to 5.5 V	V_{CC} – 0.1			V
		I_{OH} = –4 mA	1.65 V	1.2			
		I_{OH} = –8 mA	2.3 V	1.9			
		I_{OH} = –16 mA	3 V	2.4			
		I_{OH} = –24 mA		2.3			
		I_{OH} = –32 mA	4.5 V	3.8			
V_{OL}		I_{OL} = 100 µA	1.65 V to 5.5 V			0.1	V
		I_{OL} = 4 mA	1.65 V			0.45	
		I_{OL} = 8 mA	2.3 V			0.3	
		I_{OL} = 16 mA	3 V			0.4	
		I_{OL} = 24 mA				0.55	
		I_{OL} = 32 mA	4.5 V			0.55	
I_I	A input	V_I = 5.5 V or GND	0 to 5.5 V			±5	µA
I_{off}		V_I or V_O = 5.5 V	0			±10	µA
I_{CC}		V_I = 5.5 V or GND, I_O = 0	1.65 V to 5.5 V			10	µA
ΔI_{CC}		One input at V_{CC} – 0.6 V, Other inputs at V_{CC} or GND	3 V to 5.5 V			500	µA
C_i		V_I = V_{CC} or GND	3.3 V		3.5		pF

(1) All typical values are at V_{CC} = 3.3 V, T_A = 25°C.

Switching Characteristics

over recommended operating free-air temperature range, C_L = 15 pF (unless otherwise noted) (see Figure 1)

PARAMETER	FROM (INPUT)	TO (OUTPUT)	V_{CC} = 1.8 V ± 0.15 V		V_{CC} = 2.5 V ± 0.2 V		V_{CC} = 3.3 V ± 0.3 V		V_{CC} = 5 V ± 0.5 V		UNIT
			MIN	MAX	MIN	MAX	MIN	MAX	MIN	MAX	
t_{pd}	A	Y	2	6.4	1	4.2	0.7	3.3	0.7	3.1	ns

Switching Characteristics

over recommended operating free-air temperature range, C_L = 30 pF or 50 pF (unless otherwise noted) (see Figure 2)

PARAMETER	FROM (INPUT)	TO (OUTPUT)	V_{CC} = 1.8 V ± 0.15 V		V_{CC} = 2.5 V ± 0.2 V		V_{CC} = 3.3 V ± 0.3 V		V_{CC} = 5 V ± 0.5 V		UNIT
			MIN	MAX	MIN	MAX	MIN	MAX	MIN	MAX	
t_{pd}	A	Y	3	7.5	1.4	5.2	1	4.2	1	3.7	ns

Operating Characteristics

T_A = 25°C

PARAMETER		TEST CONDITIONS	V_{CC} = 1.8 V	V_{CC} = 2.5 V	V_{CC} = 3.3 V	V_{CC} = 5 V	UNIT
			TYP	TYP	TYP	TYP	
C_{pd}	Power dissipation capacitance	f = 10 MHz	16	18	18	20	pF

Copyright © 2003–2013, Texas Instruments Incorporated

PARAMETER MEASUREMENT INFORMATION

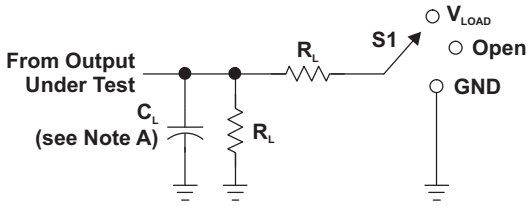

LOAD CIRCUIT

TEST	S1
t_{PLH}/t_{PHL}	Open
t_{PLZ}/t_{PZL}	V_{LOAD}
t_{PHZ}/t_{PZH}	GND

V_{CC}	INPUTS		V_M	V_{LOAD}	C_L	R_L	V_Δ
	V_I	t_r/t_f					
1.8 V ± 0.15 V	V_{CC}	≤2 ns	$V_{CC}/2$	2 × V_{CC}	15 pF	1 MΩ	0.15 V
2.5 V ± 0.2 V	V_{CC}	≤2 ns	$V_{CC}/2$	2 × V_{CC}	15 pF	1 MΩ	0.15 V
3.3 V ± 0.3 V	3 V	≤2.5 ns	1.5 V	6 V	15 pF	1 MΩ	0.3 V
5 V ± 0.5 V	V_{CC}	≤2.5 ns	$V_{CC}/2$	2 × V_{CC}	15 pF	1 MΩ	0.3 V

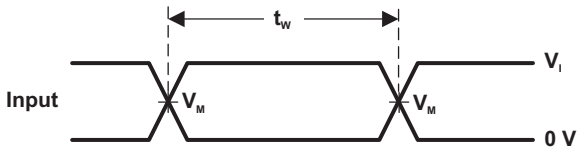

VOLTAGE WAVEFORMS
PULSE DURATION

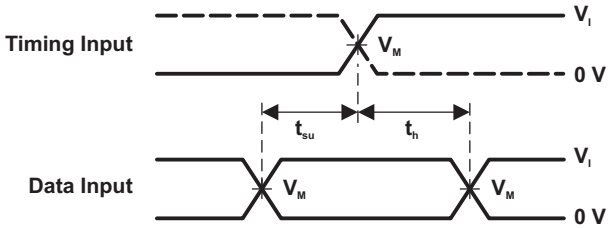

VOLTAGE WAVEFORMS
SETUP AND HOLD TIMES

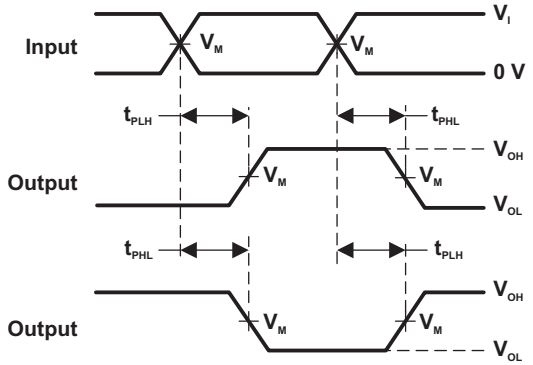

VOLTAGE WAVEFORMS
PROPAGATION DELAY TIMES
INVERTING AND NONINVERTING OUTPUTS

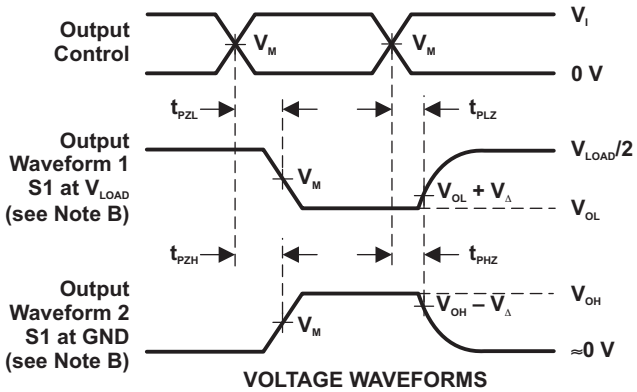

VOLTAGE WAVEFORMS
ENABLE AND DISABLE TIMES
LOW- AND HIGH-LEVEL ENABLING

NOTES:
A. C_L includes probe and jig capacitance.
B. Waveform 1 is for an output with internal conditions such that the output is low, except when disabled by the output control. Waveform 2 is for an output with internal conditions such that the output is high, except when disabled by the output control.
C. All input pulses are supplied by generators having the following characteristics: PRR ≤ 10 MHz, Z_O = 50 Ω.
D. The outputs are measured one at a time, with one transition per measurement.
E. t_{PLZ} and t_{PHZ} are the same as t_{dis}.
F. t_{PZL} and t_{PZH} are the same as t_{en}.
G. t_{PLH} and t_{PHL} are the same as t_{pd}.
H. All parameters and waveforms are not applicable to all devices.

Figure 1. Load Circuit and Voltage Waveforms

PARAMETER MEASUREMENT INFORMATION

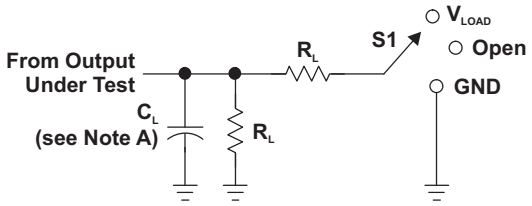

LOAD CIRCUIT

TEST	S1
t_{PLH}/t_{PHL}	Open
t_{PLZ}/t_{PZL}	V_{LOAD}
t_{PHZ}/t_{PZH}	GND

V_{CC}	INPUTS		V_M	V_{LOAD}	C_L	R_L	V_Δ
	V_I	t_r/t_f					
1.8 V ± 0.15 V	V_{CC}	≤2 ns	$V_{CC}/2$	2 × V_{CC}	30 pF	1 kΩ	0.15 V
2.5 V ± 0.2 V	V_{CC}	≤2 ns	$V_{CC}/2$	2 × V_{CC}	30 pF	500 Ω	0.15 V
3.3 V ± 0.3 V	3 V	≤2.5 ns	1.5 V	6 V	50 pF	500 Ω	0.3 V
5 V ± 0.5 V	V_{CC}	≤2.5 ns	$V_{CC}/2$	2 × V_{CC}	50 pF	500 Ω	0.3 V

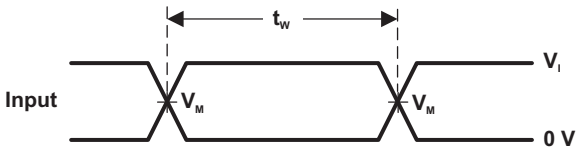

VOLTAGE WAVEFORMS
PULSE DURATION

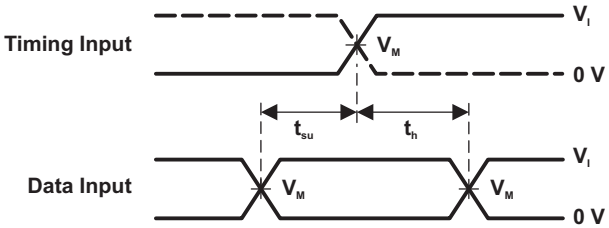

VOLTAGE WAVEFORMS
SETUP AND HOLD TIMES

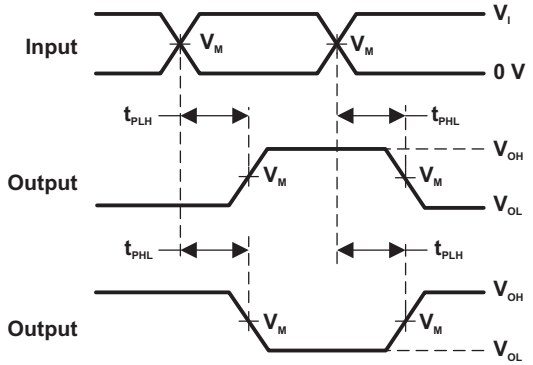

VOLTAGE WAVEFORMS
PROPAGATION DELAY TIMES
INVERTING AND NONINVERTING OUTPUTS

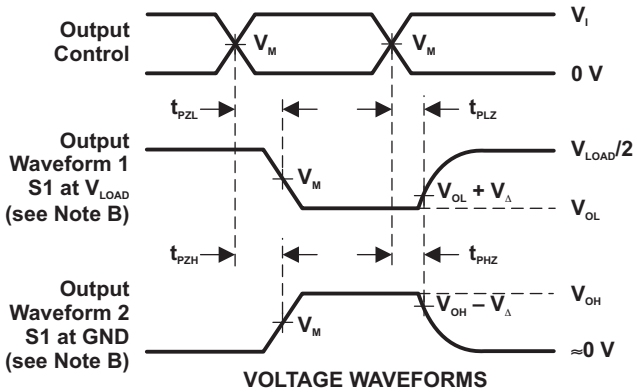

VOLTAGE WAVEFORMS
ENABLE AND DISABLE TIMES
LOW- AND HIGH-LEVEL ENABLING

NOTES: A. C_L includes probe and jig capacitance.
B. Waveform 1 is for an output with internal conditions such that the output is low, except when disabled by the output control. Waveform 2 is for an output with internal conditions such that the output is high, except when disabled by the output control.
C. All input pulses are supplied by generators having the following characteristics: PRR ≤ 10 MHz, Z_O = 50 Ω.
D. The outputs are measured one at a time, with one transition per measurement.
E. t_{PLZ} and t_{PHZ} are the same as t_{dis}.
F. t_{PZL} and t_{PZH} are the same as t_{en}.
G. t_{PLH} and t_{PHL} are the same as t_{pd}.
H. All parameters and waveforms are not applicable to all devices.

Figure 2. Load Circuit and Voltage Waveforms

Copyright © 2003–2013, Texas Instruments Incorporated

REVISION HISTORY

Changes from Revision C (APRIL 2008) to Revision D	Page
• Added new ListItem in Features, second one with sub list items	1
• Added ESD ratings to absmax table.	2

PACKAGING INFORMATION

Orderable Device	Status (1)	Package Type	Package Drawing	Pins	Package Qty	Eco Plan (2)	Lead finish/ Ball material (6)	MSL Peak Temp (3)	Op Temp (°C)	Device Marking (4/5)	Samples
SN74LVC1G04QDBVRQ1	ACTIVE	SOT-23	DBV	5	3000	RoHS & Green	NIPDAU	Level-1-260C-UNLIM	-40 to 125	C04O	Samples
SN74LVC1G04QDCKRQ1	ACTIVE	SC70	DCK	5	3000	RoHS & Green	NIPDAU	Level-1-260C-UNLIM	-40 to 125	CCO	Samples

(1) The marketing status values are defined as follows:
ACTIVE: Product device recommended for new designs.
LIFEBUY: TI has announced that the device will be discontinued, and a lifetime-buy period is in effect.
NRND: Not recommended for new designs. Device is in production to support existing customers, but TI does not recommend using this part in a new design.
PREVIEW: Device has been announced but is not in production. Samples may or may not be available.
OBSOLETE: TI has discontinued the production of the device.

(2) **RoHS:** TI defines "RoHS" to mean semiconductor products that are compliant with the current EU RoHS requirements for all 10 RoHS substances, including the requirement that RoHS substance do not exceed 0.1% by weight in homogeneous materials. Where designed to be soldered at high temperatures, "RoHS" products are suitable for use in specified lead-free processes. TI may reference these types of products as "Pb-Free".
RoHS Exempt: TI defines "RoHS Exempt" to mean products that contain lead but are compliant with EU RoHS pursuant to a specific EU RoHS exemption.
Green: TI defines "Green" to mean the content of Chlorine (Cl) and Bromine (Br) based flame retardants meet JS709B low halogen requirements of <=1000ppm threshold. Antimony trioxide based flame retardants must also meet the <=1000ppm threshold requirement.

(3) MSL, Peak Temp. - The Moisture Sensitivity Level rating according to the JEDEC industry standard classifications, and peak solder temperature.

(4) There may be additional marking, which relates to the logo, the lot trace code information, or the environmental category on the device.

(5) Multiple Device Markings will be inside parentheses. Only one Device Marking contained in parentheses and separated by a "~" will appear on a device. If a line is indented then it is a continuation of the previous line and the two combined represent the entire Device Marking for that device.

(6) Lead finish/Ball material - Orderable Devices may have multiple material finish options. Finish options are separated by a vertical ruled line. Lead finish/Ball material values may wrap to two lines if the finish value exceeds the maximum column width.

Important Information and Disclaimer: The information provided on this page represents TI's knowledge and belief as of the date that it is provided. TI bases its knowledge and belief on information provided by third parties, and makes no representation or warranty as to the accuracy of such information. Efforts are underway to better integrate information from third parties. TI has taken and continues to take reasonable steps to provide representative and accurate information but may not have conducted destructive testing or chemical analysis on incoming materials and chemicals. TI and TI suppliers consider certain information to be proprietary, and thus CAS numbers and other limited information may not be available for release.

In no event shall TI's liability arising out of such information exceed the total purchase price of the TI part(s) at issue in this document sold by TI to Customer on an annual basis.

OTHER QUALIFIED VERSIONS OF SN74LVC1G04-Q1 :

- Catalog: SN74LVC1G04
- Enhanced Product: SN74LVC1G04-EP

NOTE: Qualified Version Definitions:

- Catalog - TI's standard catalog product
- Enhanced Product - Supports Defense, Aerospace and Medical Applications

TAPE AND REEL INFORMATION

REEL DIMENSIONS

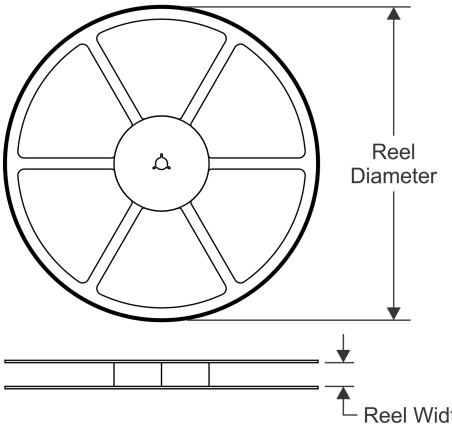

TAPE DIMENSIONS

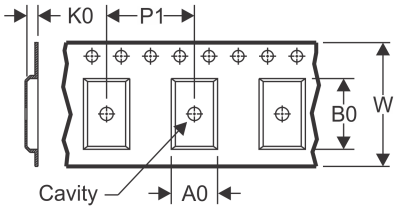

A0	Dimension designed to accommodate the component width
B0	Dimension designed to accommodate the component length
K0	Dimension designed to accommodate the component thickness
W	Overall width of the carrier tape
P1	Pitch between successive cavity centers

QUADRANT ASSIGNMENTS FOR PIN 1 ORIENTATION IN TAPE

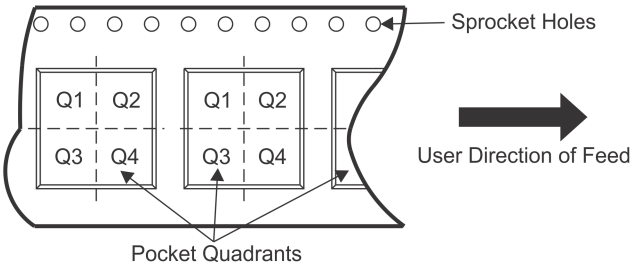

*All dimensions are nominal

Device	Package Type	Package Drawing	Pins	SPQ	Reel Diameter (mm)	Reel Width W1 (mm)	A0 (mm)	B0 (mm)	K0 (mm)	P1 (mm)	W (mm)	Pin1 Quadrant
SN74LVC1G04QDBVRQ1	SOT-23	DBV	5	3000	179.0	8.4	3.2	3.2	1.4	4.0	8.0	Q3
SN74LVC1G04QDCKRQ1	SC70	DCK	5	3000	179.0	8.4	2.2	2.5	1.2	4.0	8.0	Q3

TAPE AND REEL BOX DIMENSIONS

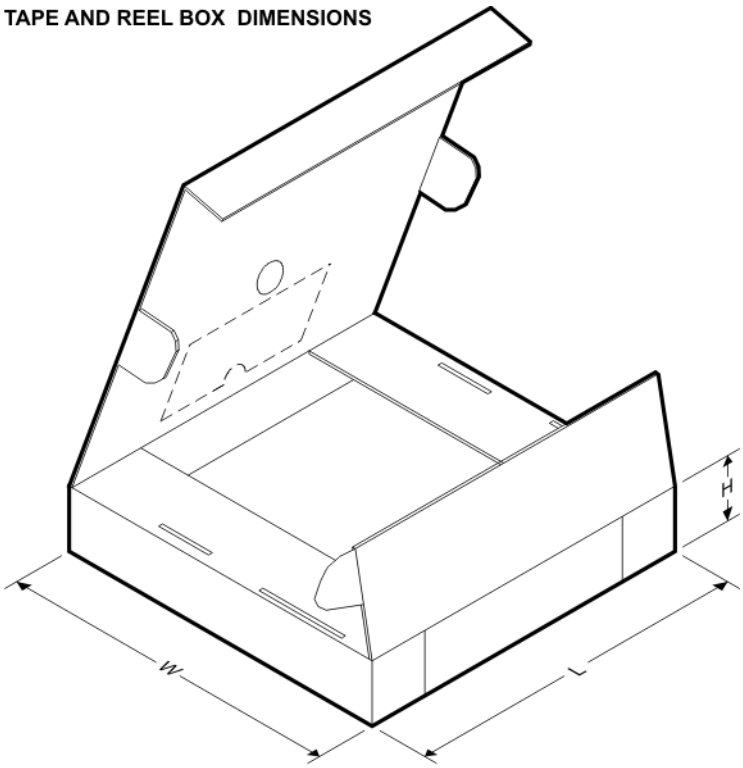

*All dimensions are nominal

Device	Package Type	Package Drawing	Pins	SPQ	Length (mm)	Width (mm)	Height (mm)
SN74LVC1G04QDBVRQ1	SOT-23	DBV	5	3000	200.0	183.0	25.0
SN74LVC1G04QDCKRQ1	SC70	DCK	5	3000	200.0	183.0	25.0

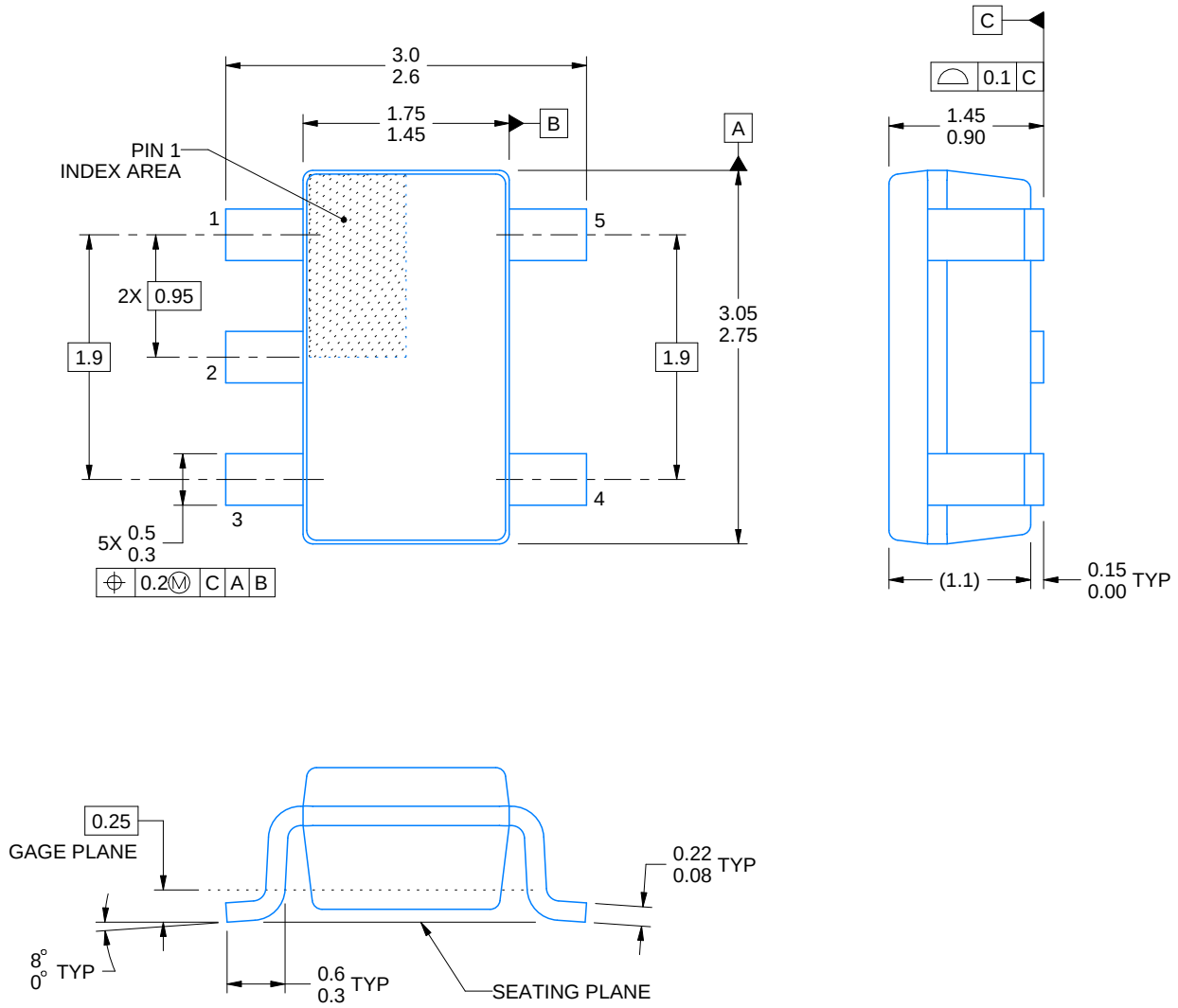

4214839/F 06/2021

NOTES:

1. All linear dimensions are in millimeters. Any dimensions in parenthesis are for reference only. Dimensioning and tolerancing per ASME Y14.5M.
2. This drawing is subject to change without notice.
3. Refernce JEDEC MO-178.
4. Body dimensions do not include mold flash, protrusions, or gate burrs. Mold flash, protrusions, or gate burrs shall not exceed 0.25 mm per side.

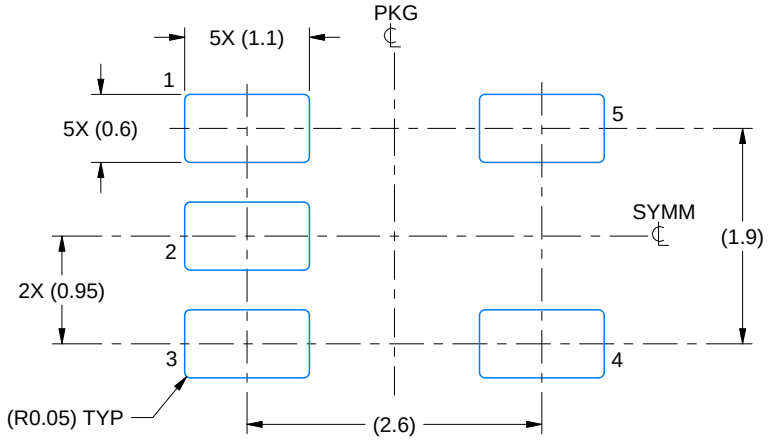

LAND PATTERN EXAMPLE
EXPOSED METAL SHOWN
SCALE:15X

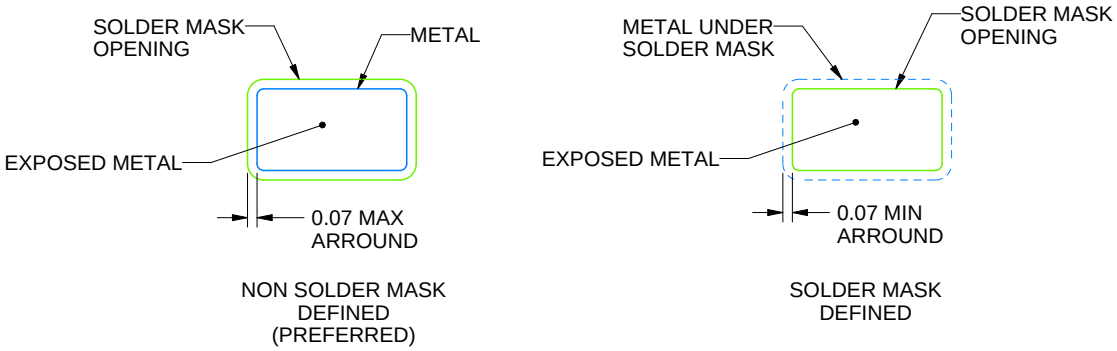

SOLDER MASK DETAILS

4214839/F 06/2021

NOTES: (continued)

5. Publication IPC-7351 may have alternate designs.
6. Solder mask tolerances between and around signal pads can vary based on board fabrication site.

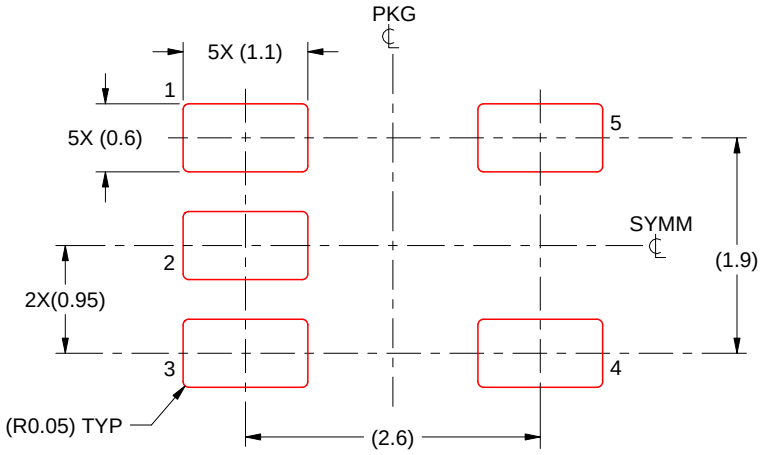

SOLDER PASTE EXAMPLE
BASED ON 0.125 mm THICK STENCIL
SCALE:15X

4214839/F 06/2021

NOTES: (continued)

7. Laser cutting apertures with trapezoidal walls and rounded corners may offer better paste release. IPC-7525 may have alternate design recommendations.
8. Board assembly site may have different recommendations for stencil design.

DCK (R–PDSO–G5) PLASTIC SMALL–OUTLINE PACKAGE

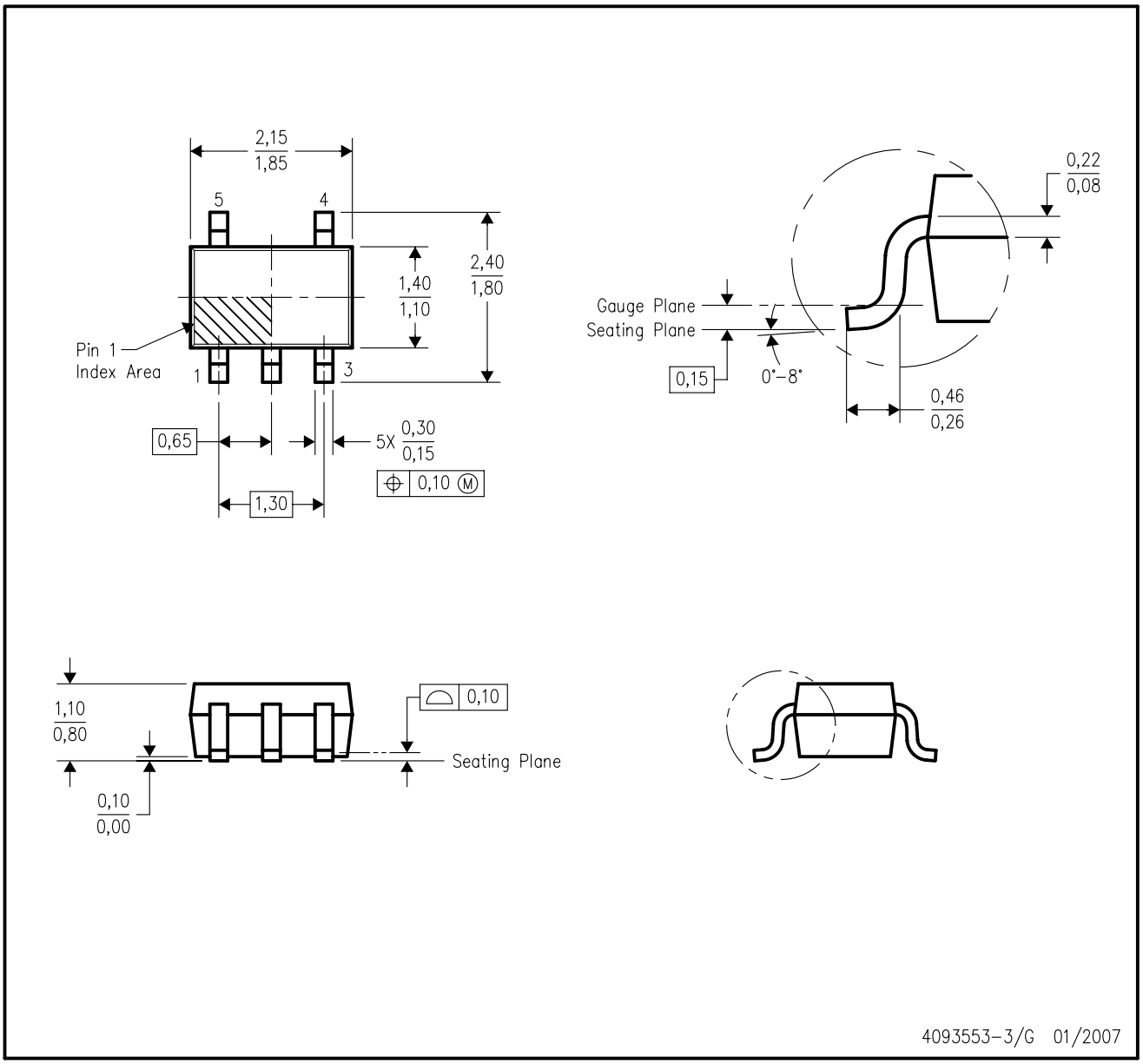

NOTES:
A. All linear dimensions are in millimeters.
B. This drawing is subject to change without notice.
C. Body dimensions do not include mold flash or protrusion. Mold flash and protrusion shall not exceed 0.15 per side.
D. Falls within JEDEC MO–203 variation AA.

DCK (R-PDSO-G5) PLASTIC SMALL OUTLINE

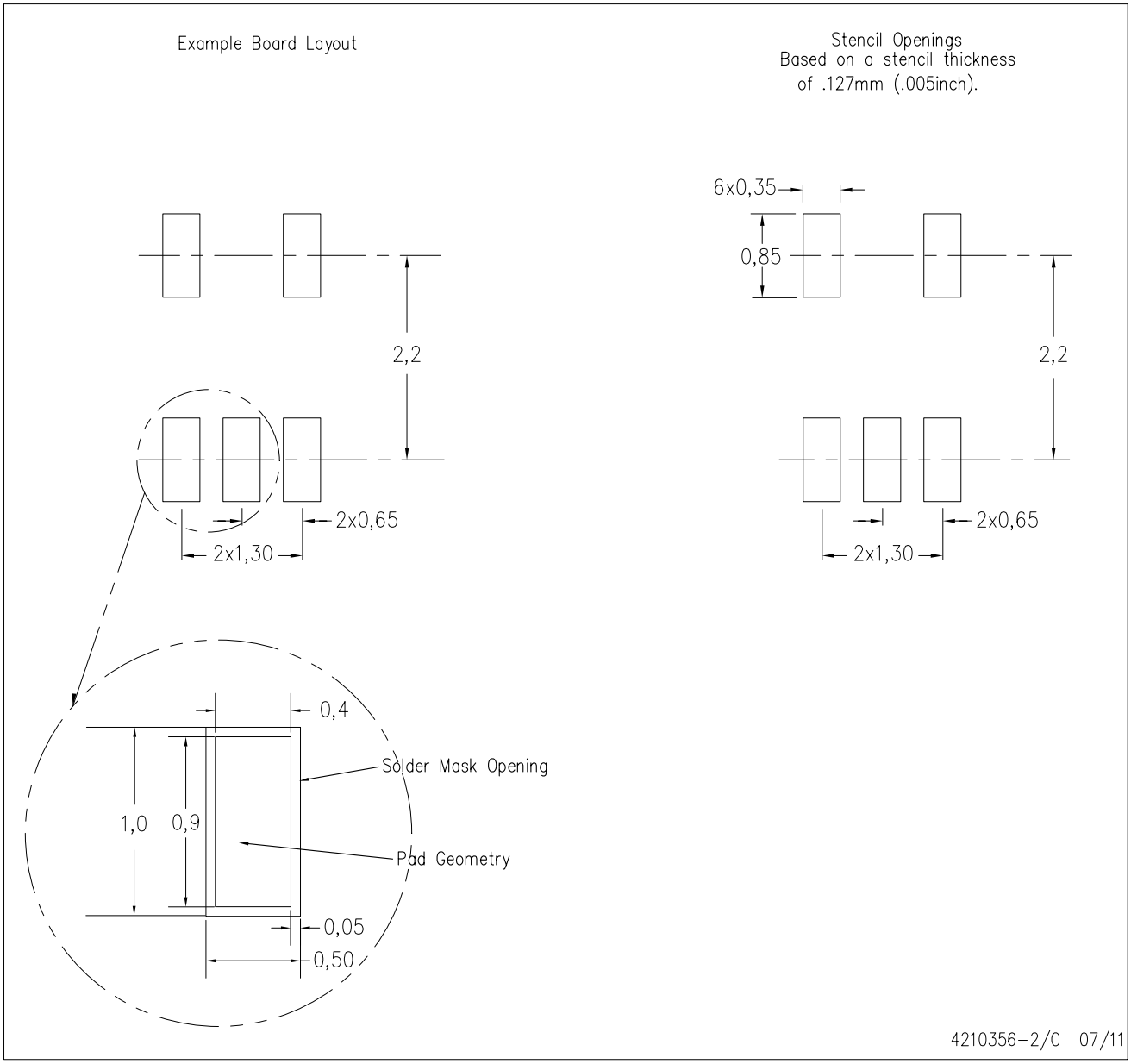

NOTES:
A. All linear dimensions are in millimeters.
B. This drawing is subject to change without notice.
C. Customers should place a note on the circuit board fabrication drawing not to alter the center solder mask defined pad.
D. Publication IPC-7351 is recommended for alternate designs.
E. Laser cutting apertures with trapezoidal walls and also rounding corners will offer better paste release. Customers should contact their board assembly site for stencil design recommendations. Example stencil design based on a 50% volumetric metal load solder paste. Refer to IPC-7525 for other stencil recommendations.

IMPORTANT NOTICE AND DISCLAIMER

TI PROVIDES TECHNICAL AND RELIABILITY DATA (INCLUDING DATASHEETS), DESIGN RESOURCES (INCLUDING REFERENCE DESIGNS), APPLICATION OR OTHER DESIGN ADVICE, WEB TOOLS, SAFETY INFORMATION, AND OTHER RESOURCES “AS IS” AND WITH ALL FAULTS, AND DISCLAIMS ALL WARRANTIES, EXPRESS AND IMPLIED, INCLUDING WITHOUT LIMITATION ANY IMPLIED WARRANTIES OF MERCHANTABILITY, FITNESS FOR A PARTICULAR PURPOSE OR NON-INFRINGEMENT OF THIRD PARTY INTELLECTUAL PROPERTY RIGHTS.

These resources are intended for skilled developers designing with TI products. You are solely responsible for (1) selecting the appropriate TI products for your application, (2) designing, validating and testing your application, and (3) ensuring your application meets applicable standards, and any other safety, security, or other requirements. These resources are subject to change without notice. TI grants you permission to use these resources only for development of an application that uses the TI products described in the resource. Other reproduction and display of these resources is prohibited. No license is granted to any other TI intellectual property right or to any third party intellectual property right. TI disclaims responsibility for, and you will fully indemnify TI and its representatives against, any claims, damages, costs, losses, and liabilities arising out of your use of these resources.

TI’s products are provided subject to TI’s Terms of Sale (https:www.ti.com/legal/termsofsale.html) or other applicable terms available either on ti.com or provided in conjunction with such TI products. TI’s provision of these resources does not expand or otherwise alter TI’s applicable warranties or warranty disclaimers for TI products.

Mailing Address: Texas Instruments, Post Office Box 655303, Dallas, Texas 75265
Copyright © 2021, Texas Instruments Incorporated