LP3869x/-Q1 500mA 低压降 CMOS 线性稳压器
使用陶瓷输出电容器时可保持稳定

1 特性

- 宽输入电压范围（2.7V 至 10V）
- 所有超薄小外形尺寸无引线封装 (WSON) 选项作为 AEC-Q100 1 级可用
- 2.0% 输出精度 (25°C)
- 低压降：500mA（5V 输出典型值）时为 250mV
- 精密（已调整）带隙基准
- 可保证 –40°C 至 +125°C 温度范围内的技术规格
- 1μA 关闭状态静态电流
- 热过载保护
- 折返电流限制
- TO-252、SOT-223 和 6 凸点晶圆级小外形无引线 (WSON) 封装
- 使能引脚 (LP38693)

2 应用范围

- 硬盘驱动器
- 笔记本电脑
- 电池供电设备
- 便携式仪表

3 说明

LP3869x 低压降 CMOS 线性稳压器具有严密的输出容差（典型值 2%）和极低压降（在负载电流为 500A、$V_{输出}$= 5V 时为 250mV），并且采用超低等效串联电阻 (ESR) 陶瓷输出电容器，可提供出色的交流性能。

此稳压器采用低热阻的 WSON、SOT-223 以及 TO-252 封装，即使在周围温度较高的环境下也可实现满电流运行。

PMOS 功率晶体管的使用意味着无需直流基极驱动电流对其进行偏置，因此无论负载电流、输入电压或者运行温度为何，接地引脚电流均可保持在 100μA 以下。

压降：500mA（5V 输出电压典型值）条件下为 250mV（典型值）

接地引脚电流：满负载时为 55μA（典型值）

精密输出电压：精度为 2% (25°C)

器件信息(1)

器件型号	封装	封装尺寸（标称值）
LP38691	TO-252 (3)	6.58mm x 6.10mm
	WSON (6)	3.00mm × 3.00mm
LP38693	SOT-223 (5)	6.50mm x 3.56mm
	WSON (6)	3.00mm × 3.00mm
LP38691-Q1	WSON (6)	3.00mm × 3.00mm
LP38693-Q1		

(1) 如需了解所有可用封装，请见数据表末尾的可订购产品附录。

4 典型应用电路

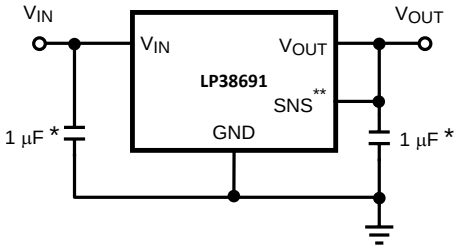

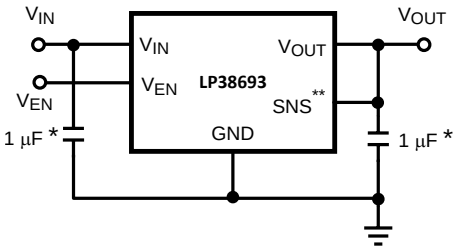

* 稳定状态下的最小值

** 仅限 WSON 封装器件

PRODUCTION DATA information is current as of publication date. Products conform to specifications per the terms of the Texas Instruments standard warranty. Production processing does not necessarily include testing of all parameters.

目录

1 特性 ... 1
2 应用范围 ... 1
3 说明 ... 1
4 典型应用电路 ... 1
5 修订历史记录 ... 2
6 **Pin Configuration and Functions** ... 3
7 **Specifications** ... 4
7.1 Absolute Maximum Ratings ... 4
7.2 Handling Ratings: LP3869x ... 4
7.3 Handling Ratings: LP3869x-Q1 ... 4
7.4 Recommended Operating Conditions ... 5
7.5 Thermal Information ... 5
7.6 Electrical Characteristics ... 5
7.7 Typical Characteristics ... 7
8 **Detailed Description** ... 11
8.1 Overview ... 11
8.2 Functional Block Diagrams ... 11
8.3 Feature Description ... 13
8.4 Device Functional Modes ... 13
9 **Application and Implementation** ... 14
9.1 Application Information ... 14
9.2 Typical Application ... 14
10 **Power Supply Recommendations** ... 19
11 **Layout** ... 19
11.1 Layout Guidelines ... 19
11.2 Layout Example ... 20
12 器件和文档支持 ... 21
12.1 相关链接 ... 21
12.2 商标 ... 21
12.3 静电放电警告 ... 21
12.4 术语表 ... 21
13 机械封装和可订购信息 ... 21

5 修订历史记录

NOTE: Page numbers for previous revisions may differ from page numbers in the current version.

Changes from Revision K (April 2013) to Revision L	Page
• 已添加 *处理额定值表*，*特性描述*部分，*器件功能模式*，*应用和实施*部分，*电源相关建议*部分，*布局*部分，*器件和文档支持*部分以及*机械、封装和可订购信息*部分	1

Changes from Revision J (April 2013) to Revision K	Page
• Changed layout of National Data Sheet to TI format	18

Copyright © 2005–2014, Texas Instruments Incorporated

6 Pin Configuration and Functions

NDP Package
3-Pin TO-252
Top View

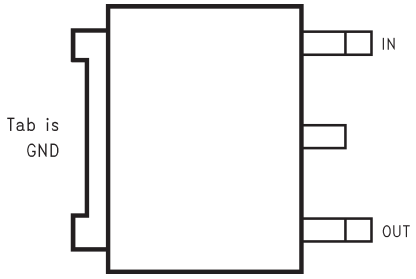

NDC Package
5-Pin SOT-223
Top View

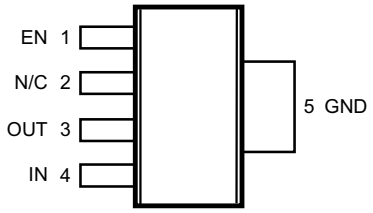

NC - No internal connection

NGG Package
6-Pin WSON With Exposed Thermal Pad
LP38691SD Top View

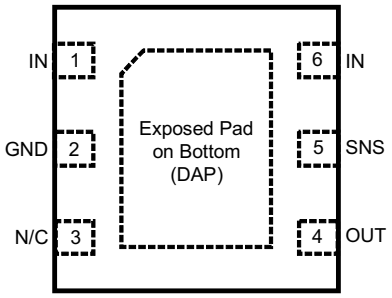

NC - No internal connection

NGG Package
6-Pin WSON With Exposed Thermal Pad
LP38693SD Top View

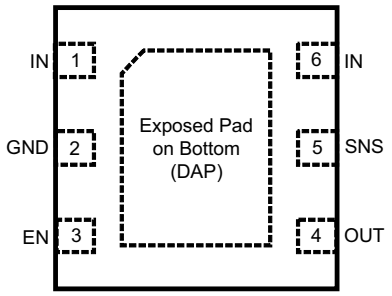

Copyright © 2005–2014, Texas Instruments Incorporated

Pin Functions

PIN					I/O	DESCRIPTION
NAME	TO-252	WSON		SOT-223		
IN	3	1, 6	1, 6	4	I	This is the input supply voltage to the regulator. For WSON devices, both V_{IN} pins must be tied together for full current operation (250mA maximum per pin).
GND	TAB	2	2	5	—	Circuit ground for the regulator. For the PFM and SOT-223 packages this is thermally connected to the die and functions as a heat sink when the soldered down to a large copper plane.
SNS	—	5	5	—	I	WSON Only - Output sense pin allows remote sensing at the load which will eliminate the error in output voltage due to voltage drops caused by the resistance in the traces between the regulator and the load. This pin must be tied to V_{OUT}.
EN	—	—	3	1	I	The enable pin allows the part to be turned ON and OFF by pulling this pin high or low.
OUT	1	4	4	3	O	Regulated output voltage
DAP	—	√	√	—	—	WSON Only - The DAP (Exposed Pad) functions as a thermal connection when soldered to a copper plane. See *WSON Mounting* section for more information.

7 Specifications

7.1 Absolute Maximum Ratings(1)(2)

	MIN	MAX	UNIT
Lead Temp. (Soldering, 5 seconds)		260	°C
Power Dissipation(3)	Internally Limited		V
V(max) All pins (with respect to GND)	–0.3	12	V
I_{OUT}(4)	Internally Limited		V
Junction Temperature	–40	150	°C

(1) Absolute maximum ratings indicate limits beyond which damage to the component may occur. Operating ratings indicate conditions for which the device is intended to be functional, but do not ensure specific performance limits. For ensured specifications, see *Electrical Characteristics*. Specifications do not apply when operating the device outside of its rated operating conditions.
(2) If Military/Aerospace specified devices are required, please contact the Texas Instruments Sales Office/ Distributors for availability and specifications.
(3) At elevated temperatures, device power dissipation must be derated based on package thermal resistance and heatsink values (if a heatsink is used). When using the WSON package, refer to *AN-1187 Leadless Leadframe Package (LLP)*, SNOA401, and the *WSON Mounting* section in this datasheet. If power dissipation causes the junction temperature to exceed specified limits, the device will go into thermal shutdown.
(4) If used in a dual-supply system where the regulator load is returned to a negative supply, the output pin must be diode clamped to ground.

7.2 Handling Ratings: LP3869x

			MIN	MAX	UNIT
T_{stg}	Storage temperature range		−65	150	°C
$V_{(ESD)}$	Electrostatic discharge	Human body model (HBM), per ANSI/ESDA/JEDEC JS-001, all pins(1)	–2	2	kV

(1) JEDEC document JEP155 states that 500-V HBM allows safe manufacturing with a standard ESD control process.

7.3 Handling Ratings: LP3869x-Q1

			MIN	MAX	UNIT
T_{stg}	Storage temperature range		−65	150	°C
$V_{(ESD)}$	Electrostatic discharge	Human body model (HBM), per ANSI/ESDA/JEDEC JS-001, all pins(1)	–2	2	kV

(1) JEDEC document JEP155 states that 500-V HBM allows safe manufacturing with a standard ESD control process.

Copyright © 2005–2014, Texas Instruments Incorporated

7.4 Recommended Operating Conditions

	MIN	NOM	MAX	UNIT
V_{IN} Supply Voltage	2.7		10	V
Operating Junction Temperature Range	−40		125	°C

7.5 Thermal Information

THERMAL METRIC[1]		LP38691 TO-252 3 PINS	LP38693 WSON 6 PINS	LP3869x SOT-223 5 PINS	UNIT
$R_{\theta JA}$[2]	Junction-to-ambient thermal resistance	50.5	50.6	68.5	°C/W
$R_{\theta JC(top)}$	Junction-to-case (top) thermal resistance	52.6	44.4	52.2	
$R_{\theta JB}$	Junction-to-board thermal resistance	29.7	24.9	13.0	
ψ_{JT}	Junction-to-top characterization parameter	4.8	0.4	5.5	
ψ_{JB}	Junction-to-board characterization parameter	29.3	25.1	12.8	
$R_{\theta JC(bot)}$	Junction-to-case (bottom) thermal resistance	1.5	5.4	n/a	

(1) For more information about traditional and new thermal metrics, see the *IC Package Thermal Metrics* application report, SPRA953.
(2) Junction-to-ambient thermal resistance, High-K.

7.6 Electrical Characteristics

Limits in standard typeface are for T_J = 25°C. Unless otherwise specified: $V_{IN} = V_{OUT}$ + 1 V, $C_{IN} = C_{OUT}$ = 10 µF, I_{LOAD} = 10 mA. Min/Max limits are specified through testing, statistical correlation, or design.

PARAMETER		TEST CONDITIONS		MIN	TYP[1]	MAX	UNIT
V_O	Output Voltage Tolerance			–2.0		2.0	$\%V_{OUT}$
		100 µA < I_L < 0.5 A V_O + 1 V ≤ V_{IN} ≤ 10 V Full operating temperature range		–4.0		4.0	
$\Delta V_O/\Delta V_{IN}$	Output Voltage Line Regulation[2]	V_O + 0.5 V ≤ V_{IN} ≤ 10 V I_L = 25 mA			0.03		%/V
		V_O + 0.5 V ≤ V_{IN} ≤ 10 V I_L = 25 mA Full operating temperature range				0.1	
$\Delta V_O/\Delta I_L$	Output Voltage Load Regulation[3]	1 mA < I_L < 0.5 A $V_{IN} = V_O$ + 1 V			1.8		%/A
		1 mA < I_L < 0.5 A $V_{IN} = V_O$ + 1 V Full operating temperature range				5	
V_{IN} - V_{OUT}	Dropout Voltage[4]	(V_O = 2.5 V)	I_L = 0.1 A		80		mV
			I_L = 0.5 A		430		
		(V_O = 2.5 V) Full operating temperature range	I_L = 0.1 A			145	
			I_L = 0.5 A			725	
		(V_O = 3.3 V)	I_L = 0.1 A		65		
			I_L = 0.5 A		330		
		(V_O = 3.3 V) Full operating temperature range	I_L = 0.1 A			110	
			I_L = 0.5 A			550	
		(V_O = 5 V)	I_L = 0.1 A		45		
			I_L = 0.5 A		250		
		(V_O = 5 V) Full operating temperature range	I_L = 0.1 A			100	
			I_L = 0.5 A			450	

(1) Typical numbers represent the most likely parametric norm for 25°C operation.
(2) Output voltage line regulation is defined as the change in output voltage from nominal value resulting from a change in input voltage.
(3) Output voltage load regulation is defined as the change in output voltage from nominal value as the load current increases from 1 mA to full load.
(4) Dropout voltage is defined as the minimum input to output differential required to maintain the output within 100 mV of nominal value.

Copyright © 2005–2014, Texas Instruments Incorporated

Electrical Characteristics (continued)

Limits in standard typeface are for T_J = 25°C. Unless otherwise specified: V_{IN} = V_{OUT} + 1 V, C_{IN} = C_{OUT} = 10 µF, I_{LOAD} = 10 mA. Min/Max limits are specified through testing, statistical correlation, or design.

PARAMETER		TEST CONDITIONS	MIN	TYP(1)	MAX	UNIT
I_Q	Quiescent Current	V_{IN} ≤ 10 V, I_L =100 µA - 0.5 A		55		µA
		V_{IN} ≤ 10 V, I_L =100 µA - 0.5 A Full operating temperature range			100	
		V_{EN} ≤ 0.4 V, (LP38693 Only)		0.001	1	
I_L(MIN)	Minimum Load Current	V_{IN} - V_O ≤ 4 V Full operating temperature range			100	
I_{FB}	Foldback Current Limit	V_{IN} - V_O > 5 V		350		mA
		V_{IN} - V_O < 4 V		850		
PSRR	Ripple Rejection	V_{IN} = V_O + 2 V(DC), with 1 V(p-p) / 120 Hz Ripple		55		dB
T_{SD}	Thermal Shutdown Activation (Junction Temp)			160		°C
T_{SD} (HYST)	Thermal Shutdown Hysteresis (Junction Temp)			10		
e_n	Output Noise	BW = 10 Hz to 10 kHz V_O = 3.3 V		0.7		µV/√Hz
V_O (LEAK)	Output Leakage Current	V_O = V_O(NOM) + 1 V at 10 V_{IN}		0.5	12	µA
V_{EN}	Enable Voltage (LP38693 Only)	Output = OFF Full operating temperature range			0.4	V
		Output = ON, V_{IN} = 4 V Full operating temperature range	1.8			
		Output = ON, V_{IN} = 6 V Full operating temperature range	3.0			
		Output = ON, V_{IN} = 10 V Full operating temperature range	4.0			
I_{EN}	Enable Pin Leakage (LP38693 Only)	V_{EN} = 0 V or 10 V, V_{IN} = 10 V	–1	0.001	1	µA

Copyright © 2005–2014, Texas Instruments Incorporated

7.7 Typical Characteristics

Unless otherwise specified: T_J = 25°C, C_{IN} = C_{OUT} = 10 µF, Enable pin is tied to V_{IN} (LP38693 only), V_{OUT} = 1.8 V, V_{IN} = V_{OUT} 1 V, I_L = 10 mA.

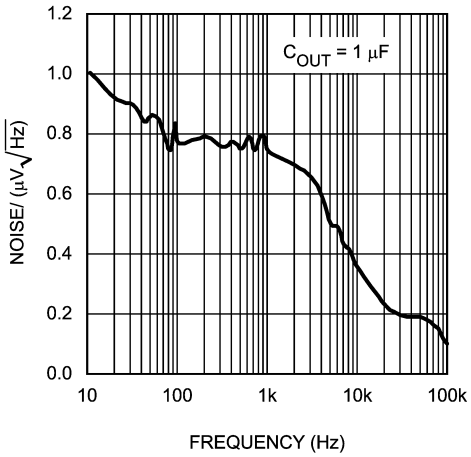

Figure 1. Noise vs Frequency

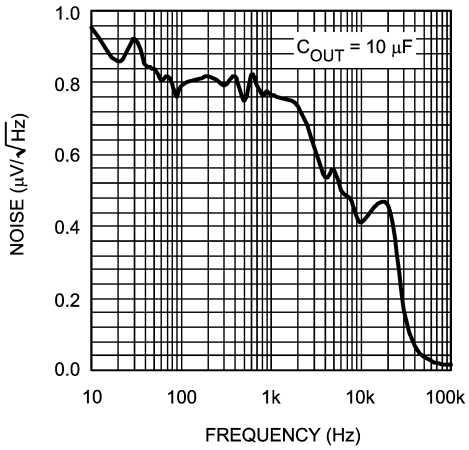

Figure 2. Noise vs Frequency

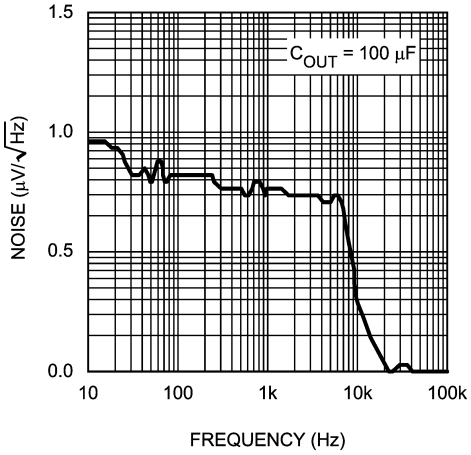

Figure 3. Noise vs Frequency

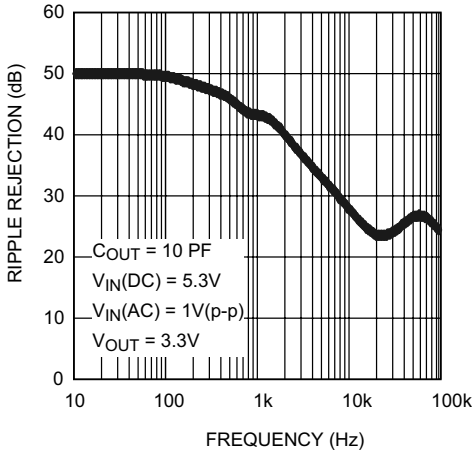

Figure 4. Ripple Rejection

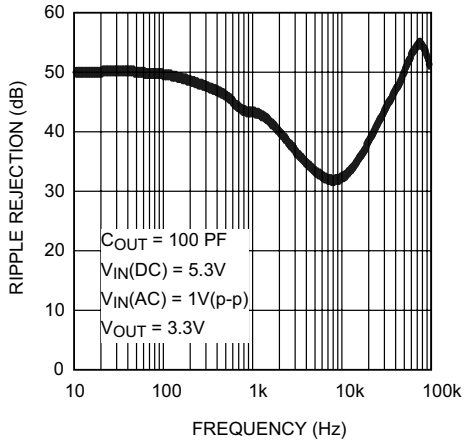

Figure 5. Ripple Rejection

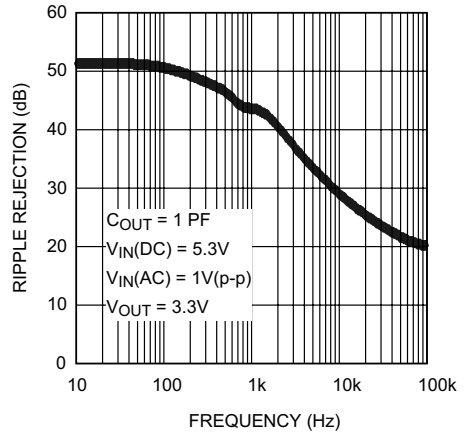

Figure 6. Ripple Rejection

Copyright © 2005–2014, Texas Instruments Incorporated

Typical Characteristics (continued)

Unless otherwise specified: T_J = 25°C, C_{IN} = C_{OUT} = 10 µF, Enable pin is tied to V_{IN} (LP38693 only), V_{OUT} = 1.8 V, V_{IN} = V_{OUT} 1 V, I_L = 10 mA.

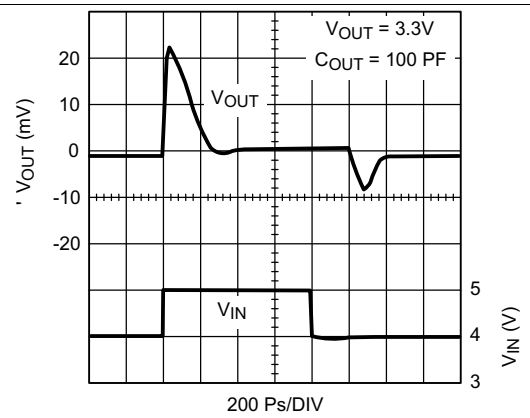

Figure 7. Line Transient Response

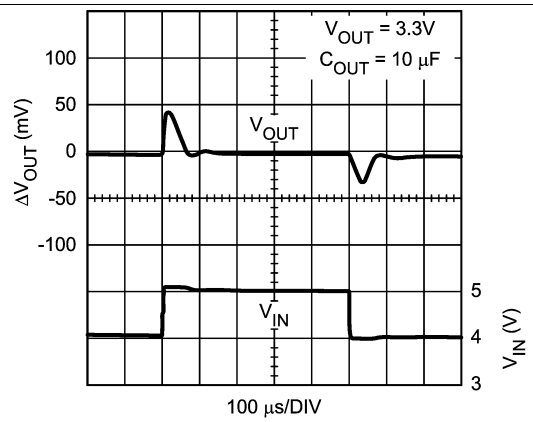

Figure 8. Line Transient Response

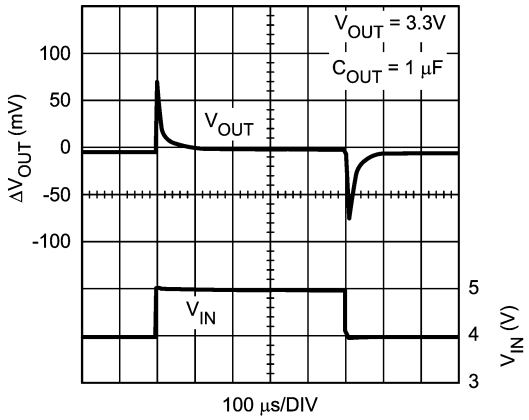

Figure 9. Line Transient Response

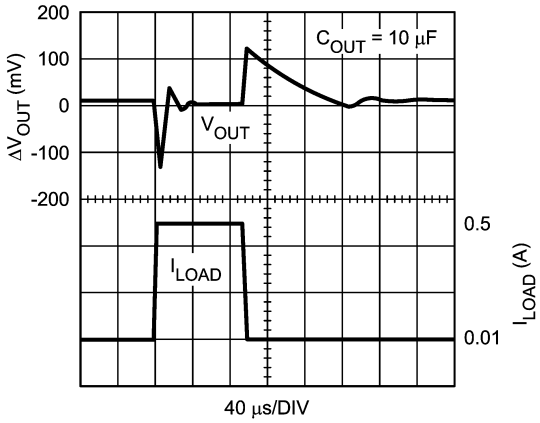

Figure 10. Load Transient Response

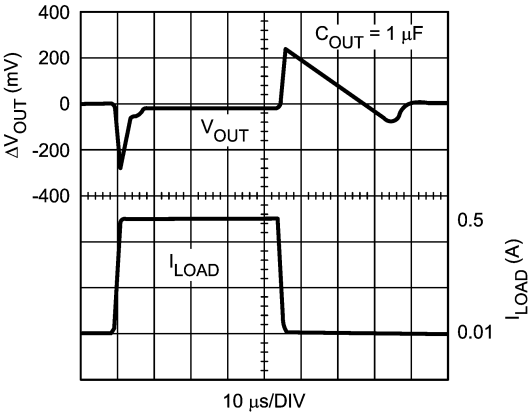

Figure 11. Load Transient Response

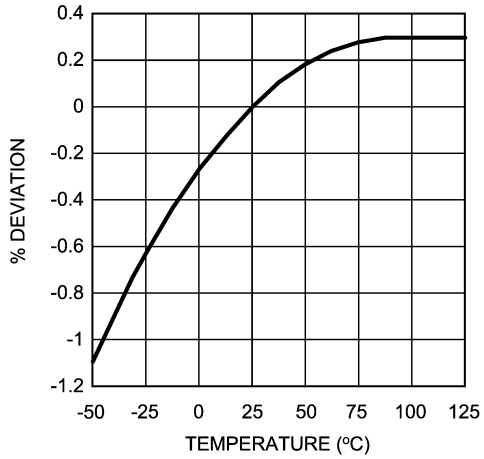

Figure 12. V_{OUT} vs Temperature (5.0 V)

Copyright © 2005–2014, Texas Instruments Incorporated

Typical Characteristics (continued)

Unless otherwise specified: T_J = 25°C, C_{IN} = C_{OUT} = 10 µF, Enable pin is tied to V_{IN} (LP38693 only), V_{OUT} = 1.8 V, V_{IN} = V_{OUT} 1 V, I_L = 10 mA.

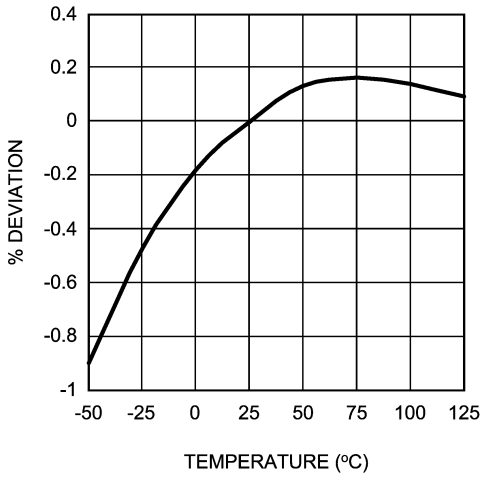

Figure 13. V_{OUT} vs Temperature (3.3 V)

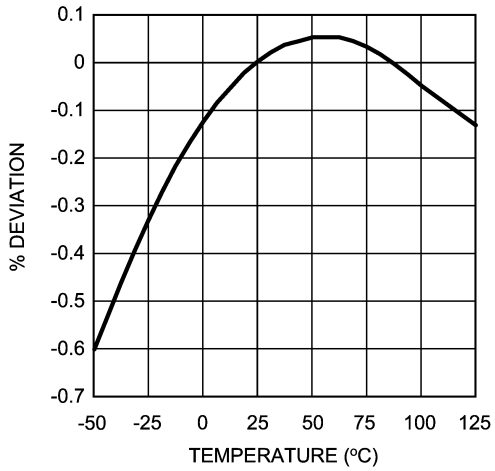

Figure 14. V_{OUT} vs Temperature (2.5 V)

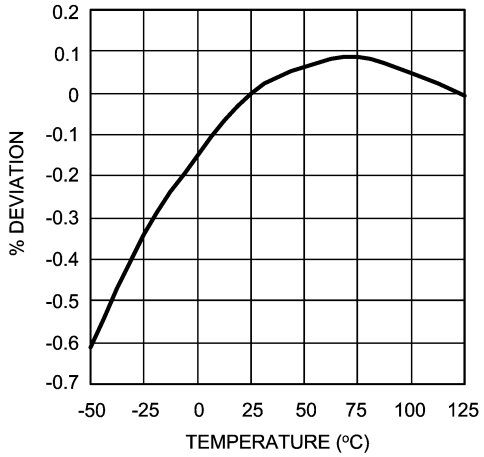

Figure 15. V_{OUT} vs Temperature (1.8 V)

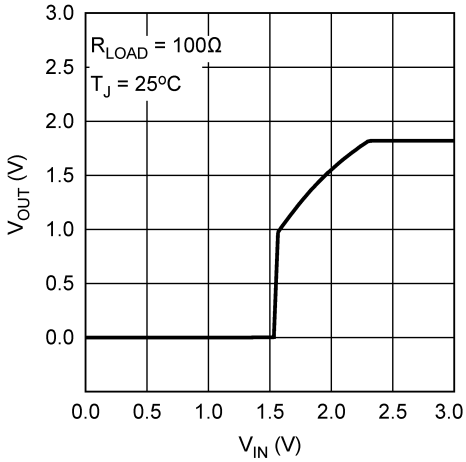

Figure 16. V_{OUT} vs V_{IN} (1.8 V)

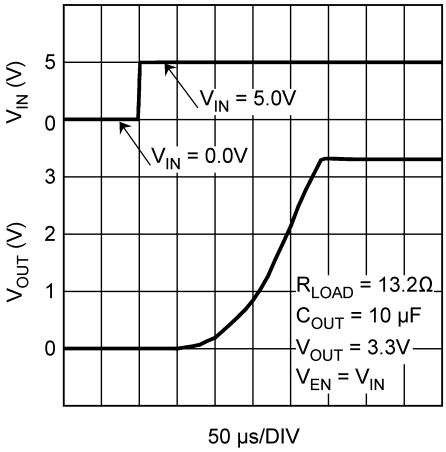

Figure 17. V_{OUT} vs V_{IN}, Power-Up

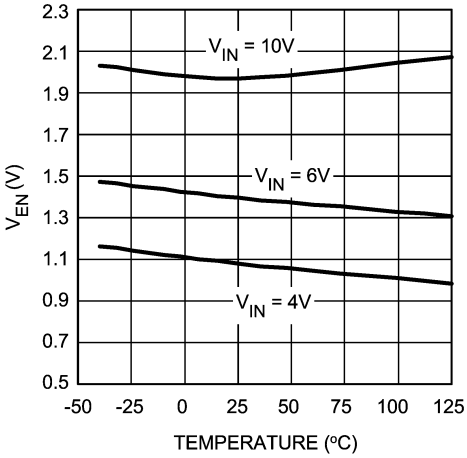

Figure 18. Enable Voltage vs Temperature

Copyright © 2005–2014, Texas Instruments Incorporated

Typical Characteristics (continued)

Unless otherwise specified: T_J = 25°C, C_{IN} = C_{OUT} = 10 µF, Enable pin is tied to V_{IN} (LP38693 only), V_{OUT} = 1.8 V, V_{IN} = V_{OUT} 1 V, I_L = 10 mA.

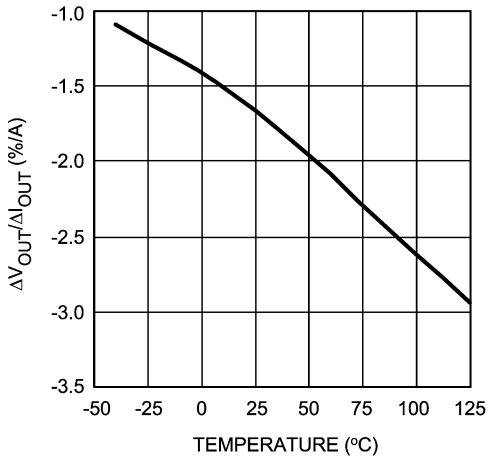

Figure 19. Load Regulation vs Temperature

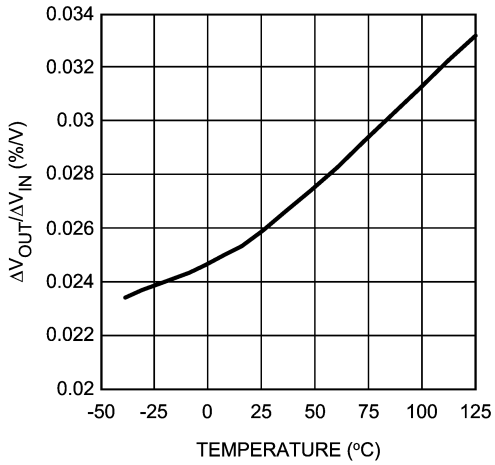

Figure 20. Line Regulation vs Temperature

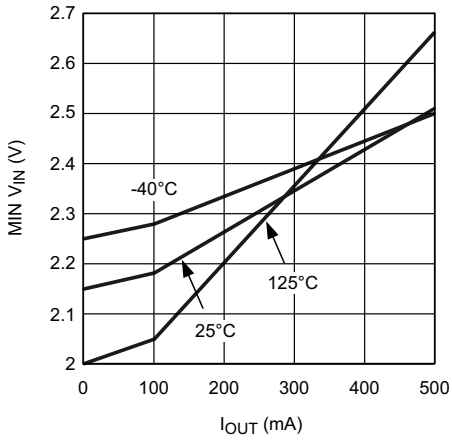

Figure 21. MIN V_{IN} vs I_{OUT}

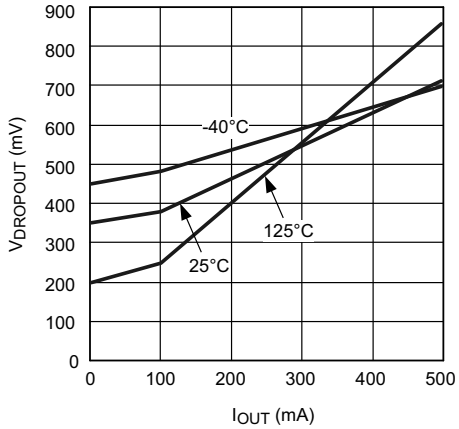

Figure 22. Dropout Voltage vs I_{OUT}

Copyright © 2005–2014, Texas Instruments Incorporated

8 Detailed Description

8.1 Overview

The LP38691/93 are designed to meet the requirements of portable, battery-powered digital systems providing an accurate output voltage with fast start-up. When disabled via a low logic signal at the enable pin (EN), the power consumption is reduced to virtually zero (LP38693 only).

The LP38691/93 will perform well with a single 1-μF input capacitor and a single 1-μF ceramic output capacitor.

8.2 Functional Block Diagrams

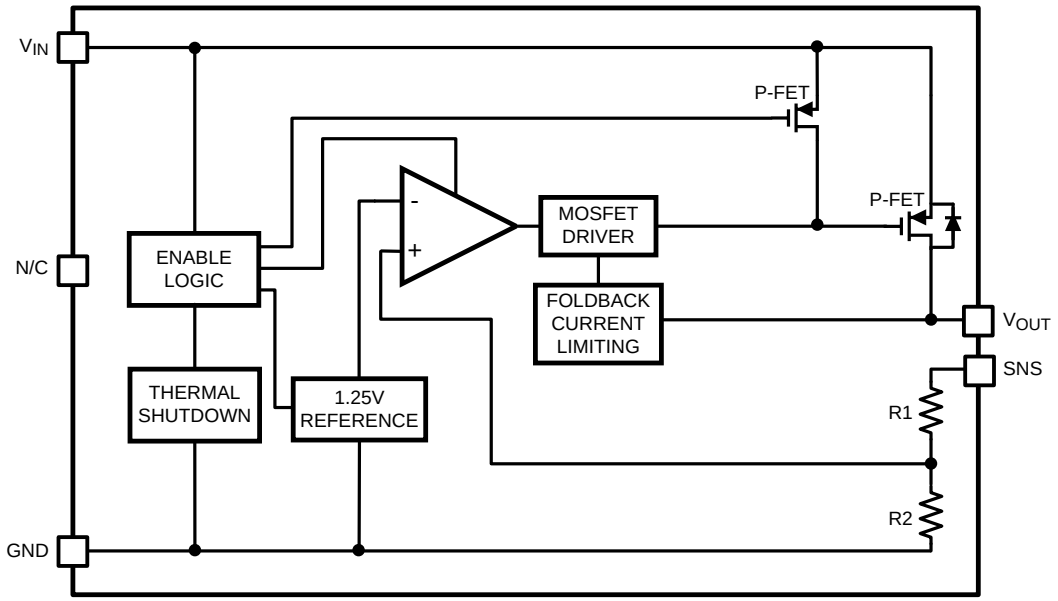

Figure 23. LP38691 Functional Diagram (WSON)

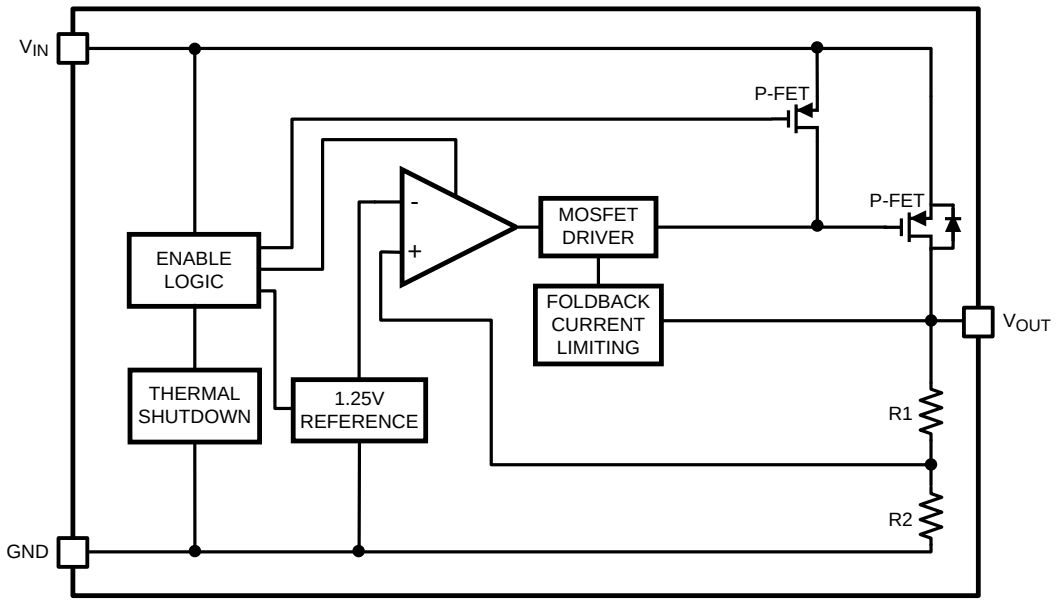

Figure 24. LP38691 Functional Diagram (TO-252)

Copyright © 2005–2014, Texas Instruments Incorporated

Functional Block Diagrams (continued)

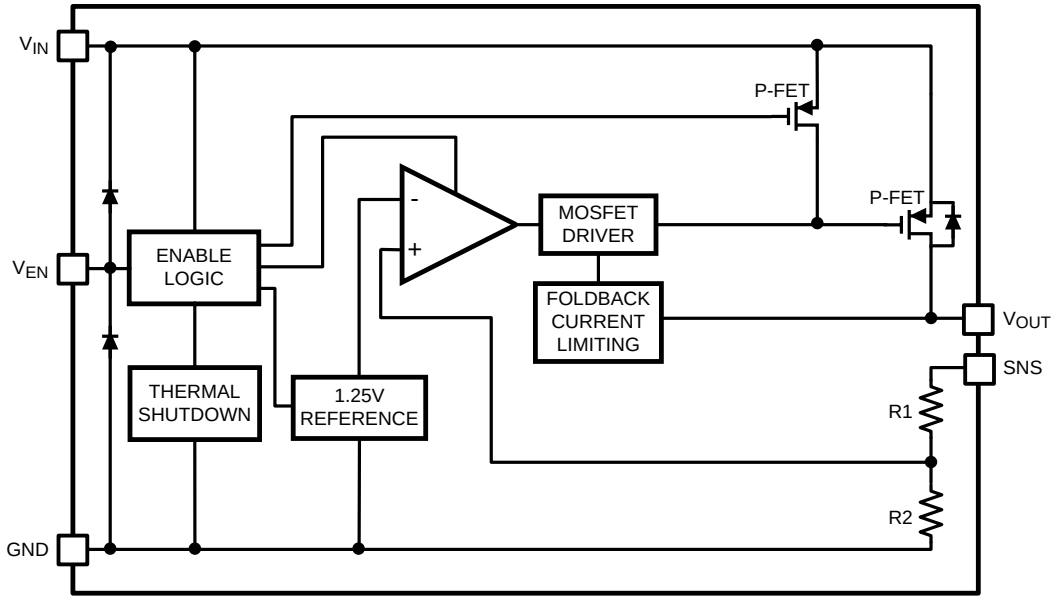

Figure 25. LP38693 Functional Diagram (WSON)

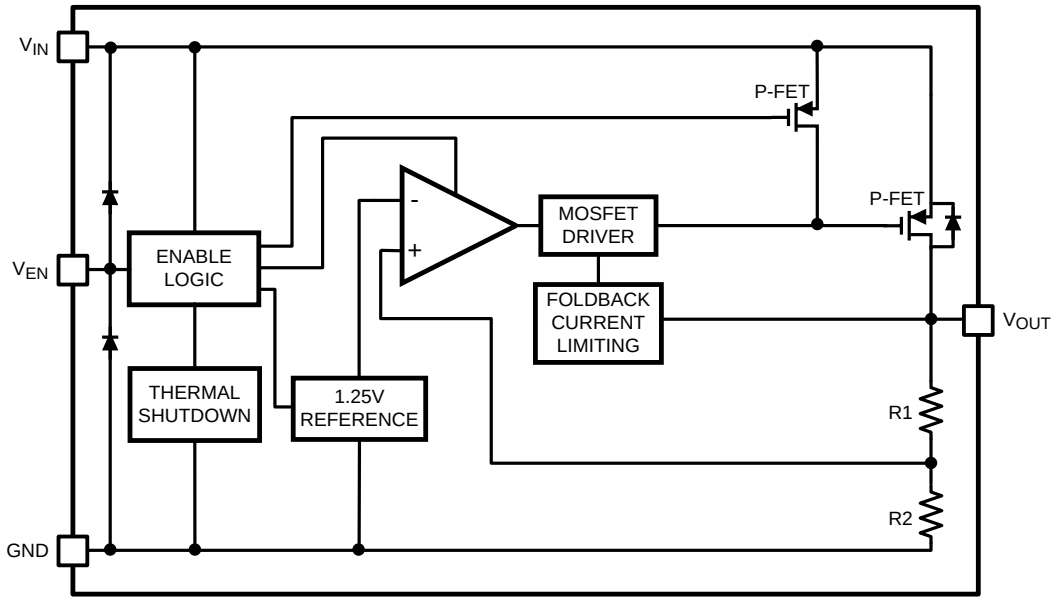

Figure 26. LP38693 Functional Diagram (SOT-223)

Copyright © 2005–2014, Texas Instruments Incorporated

8.3 Feature Description

8.3.1 Enable (EN)

The LP38693 has an Enable pin (EN) which allows an external control signal to turn the regulator output On and Off. The Enable On/Off threshold has no hysteresis. The voltage signal must rise and fall cleanly, and promptly, through the ON and OFF voltage thresholds. The EN pin voltage must be higher than the $V_{EN(MIN)}$ threshold to ensure that the device is fully enabled under all operating conditions. The EN pin voltage must be lower than the $V_{EN(MAX)}$ threshold to ensure that the device is fully disabled. The EN pin has no internal pullup or pulldown to establish a default condition and, as a result, this pin must be terminated either actively or passively. If the EN pin is driven from a source that actively pulls high and low, the drive voltage should not be allowed to go below ground potential or higher than V_{IN}. If the application does not require the Enable function, the pin should be connected directly to the V_{IN} pin.

8.3.2 Thermal Overload Protection (TSD)

Thermal Shutdown disables the output when the junction temperature rises to approximately 160°C which allows the device to cool. When the junction temperature cools to approximately 150°C, the output circuitry enables.

Based on power dissipation, thermal resistance, and ambient temperature, the thermal protection circuit may cycle on and off. This thermal cycling limits the dissipation of the regulator and protects it from damage as a result of overheating. The Thermal Shutdown circuitry of the LP38693 has been designed to protect against temporary thermal overload conditions.

The Thermal Shutdown circuitry was not intended to replace proper heat-sinking. Continuously running the LP38693 device into thermal shutdown degrades device reliability.

8.3.3 Foldback Current Limiting

Foldback current limiting is built into the LP38691 and LP38693 devices which reduces the amount of output current the part can deliver as the output voltage is reduced. The amount of load current is dependent on the differential voltage between VIN and VOUT. Typically, when this differential voltage exceeds 5 V, the load current will limit at about 350 mA. When the VIN - VOUT differential is reduced below 4 V, load current is limited to about 850 mA.

8.4 Device Functional Modes

8.4.1 Enable (EN)

The EN pin voltage must be higher than the $V_{EN(MIN)}$ threshold to ensure that the device is fully enabled under all operating conditions.

8.4.2 Minimum Operating Input Voltage (VIN)

The LP3869x does not include any dedicated UVLO circuitry. The LP3869x internal circuitry is not fully functional until VIN is at least 2.7 V. The output voltage is not regulated until VIN ≥ (V_{OUT} + V_{DO}), or 2.7 V, whichever is higher.

Copyright © 2005–2014, Texas Instruments Incorporated

9 Application and Implementation

NOTE

Information in the following applications sections is not part of the TI component specification, and TI does not warrant its accuracy or completeness. TI's customers are responsible for determining suitability of components for their purposes. Customers should validate and test their design implementation to confirm system functionality.

9.1 Application Information

9.1.1 Reverse Voltage

A reverse voltage condition will exist when the voltage at the output pin is higher than the voltage at the input pin. Typically this will happen when V_{IN} is abruptly taken low and C_{OUT} continues to hold a sufficient charge such that the input to output voltage becomes reversed. A less common condition is when an alternate voltage source is connected to the output.

There are two possible paths for current to flow from the output pin back to the input during a reverse voltage condition.

1. While V_{IN} is high enough to keep the control circuity alive, and the Enable pin (LP38693 only) is above the $V_{EN(ON)}$ threshold, the control circuitry will attempt to regulate the output voltage. If the input voltage is less than the programmed output voltage, the control circuit will drive the gate of the pass element to the full ON condition. In this condition, reverse current will flow from the output pin to the input pin, limited only by the $R_{DS(ON)}$ of the pass element and the output to input voltage differential. Discharging an output capacitor up to 1000 µF in this manner will not damage the device as the current will rapidly decay. However, continuous reverse current should be avoided. When the Enable pin is low this condition will be prevented.
2. The internal PFET pass element has an inherent parasitic diode. During normal operation, the input voltage is higher than the output voltage and the parasitic diode is reverse biased. However, when V_{IN} is below the value where the control circuity is alive, or the Enable pin is low (LP38693 only), and the output voltage is more than 500 mV (typical) above the input voltage the parasitic diode becomes forward biased and current flows from the output pin to the input pin through the diode. The current in the parasitic diode should be limited to less than 1A continuous and 5A peak.

   If used in a dual-supply system where the regulator output load is returned to a negative supply, the output pin must be diode clamped to ground to limit the negative voltage transition. A Schottky diode is recommended for this protective clamp.

9.2 Typical Application

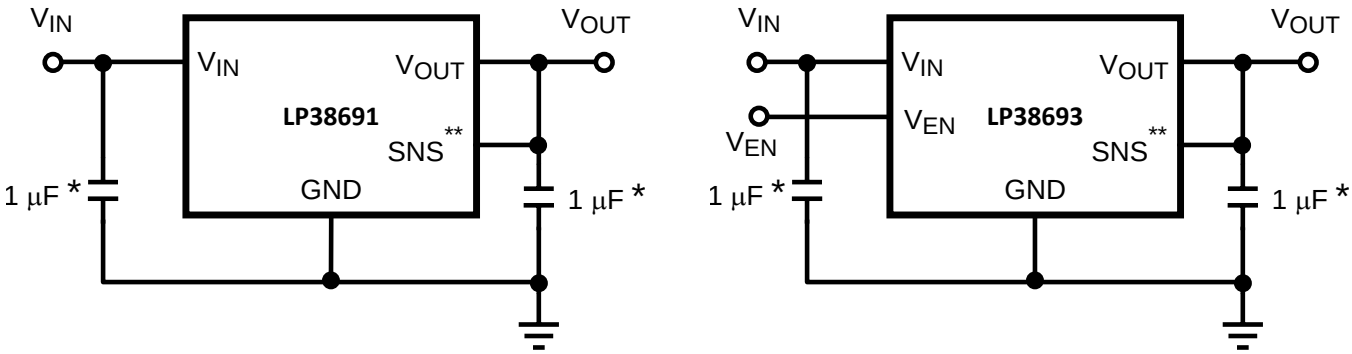

* Minimum value required for stability.
**WSON package devices only.

Copyright © 2005–2014, Texas Instruments Incorporated

9.2.1 Design Requirements

Table 1. Design Parameters

DESIGN PARAMETERS	EXAMPLE VALUE
Input voltage range	2.7 V to 10 V
Output range	1.8 V
Output current	1 A
Output capacitor range	1 µF
Input and output capacitor ESR range	5 mΩ to 500 mΩ

9.2.2 Detailed Design Procedure

To begin the design process, determine the following:

- Available input voltage range
- Output voltage needed
- Output current needed
- Input and output capacitors

9.2.2.1 Power Dissipation and Device Operation

The permissible power dissipation for any package is a measure of the capability of the device to pass heat from the power source, the junctions of the IC, to the ultimate heat sink, the ambient environment. Thus, the power dissipation is dependent on the ambient temperature and the thermal resistance across the various interfaces between the die junction and ambient air.

The maximum allowable power dissipation for the device in a given package can be calculated using Equation 1:

$$P_{D\text{-}MAX} = ((T_{J\text{-}MAX} - T_A) / R_{\theta JA}) \quad (1)$$

The actual power being dissipated in the device can be represented by Equation 2:

$$P_D = (V_{IN} - V_{OUT}) \times I_{OUT} \quad (2)$$

These two equations establish the relationship between the maximum power dissipation allowed due to thermal consideration, the voltage drop across the device, and the continuous current capability of the device. These two equations should be used to determine the optimum operating conditions for the device in the application.

In applications where lower power dissipation (P_D) and/or excellent package thermal resistance ($R_{\theta JA}$) is present, the maximum ambient temperature ($T_{A\text{-}MAX}$) may be increased.

In applications where high power dissipation and/or poor package thermal resistance is present, the maximum ambient temperature ($T_{A\text{-}MAX}$) may have to be derated. $T_{A\text{-}MAX}$ is dependent on the maximum operating junction temperature ($T_{J\text{-}MAX\text{-}OP}$ = 125°C), the maximum allowable power dissipation in the device package in the application ($P_{D\text{-}MAX}$), and the junction-to ambient thermal resistance of the part/package in the application ($R_{\theta JA}$), as given by Equation 3:

$$T_{A\text{-}MAX} = (T_{J\text{-}MAX\text{-}OP} – (R_{\theta JA} \times P_{D\text{-}MAX})) \quad (3)$$

Alternately, if $T_{A\text{-}MAX}$ can not be derated, the P_D value must be reduced. This can be accomplished by reducing V_{IN} in the 'V_{IN}–V_{OUT}' term as long as the minimum V_{IN} is met, or by reducing the I_{OUT} term, or by some combination of the two.

9.2.2.2 External Capacitors

In common with most regulators, the LP3869x requires external capacitors for regulator stability. The LP3869x is specifically designed for portable applications requiring minimum board space and smallest components. These capacitors must be correctly selected for good performance.

9.2.2.3 Input Capacitor

An input capacitor is required for stability. It is recommended that a 1-µF capacitor be connected between the LP3869x IN pin and GND pin (this capacitance value may be increased without limit).

This capacitor must be located a distance of not more than 1 cm from the IN pin and returned to a clean analogue ground. Any good quality ceramic, tantalum, or film capacitor may be used at the input.

Copyright © 2005–2014, Texas Instruments Incorporated

Important: To ensure stable operation it is essential that good PCB design practices are employed to minimize ground impedance and keep input inductance low. If these conditions cannot be met, or if long leads are used to connect the battery or other power source to the LP3869x, then it is recommended that the input capacitor is increased. Also, tantalum capacitors can suffer catastrophic failures due to surge current when connected to a low-impedance source of power (like a battery or a very large capacitor). If a tantalum capacitor is used at the input, it must be ensured by the manufacturer to have a surge current rating sufficient for the application.

There are no requirements for the ESR (equivalent series resistance) on the input capacitor, but tolerance and temperature coefficient must be considered when selecting the capacitor to ensure the capacitance will remain approximately 1 µF over the entire operating temperature range.

9.2.2.4 Output Capacitor

The LP3869x is designed specifically to work with very small ceramic output capacitors. A 1-µF ceramic capacitor (temperature types Z5U, Y5V or X7R/X5R) with ESR between 5 mΩ to 500 mΩ, is suitable in the LP3869x application circuit.

For this device the output capacitor should be connected between the OUT pin and GND pin.

It is also possible to use tantalum or film capacitors at the device output, but these are not as attractive for reasons of size and cost.

The output capacitor must meet the requirement for the minimum value of capacitance and also have an ESR value that is within the range 5 mΩ to 500 mΩ for stability.

9.2.2.5 No-Load Stability

The LP3869x will remain stable and in regulation with no external load. This is an important consideration in some circuits, for example CMOS RAM keep-alive applications.

9.2.2.6 Capacitor Characteristics

The LP3869x is designed to work with ceramic capacitors on the output to take advantage of the benefits they offer. For capacitance values in the range of 0.47 µF to 4.7 µF, ceramic capacitors are the smallest, least expensive and have the lowest ESR values, thus making them best for eliminating high frequency noise. The ESR of a typical 1-µF ceramic capacitor is in the range of 20 mΩ to 40 mΩ, which easily meets the ESR requirement for stability for the LP3869x.

For both input and output capacitors, careful interpretation of the capacitor specification is required to ensure correct device operation. The capacitor value can change greatly, depending on the operating conditions and capacitor type.

In particular, the output capacitor selection should take account of all the capacitor parameters, to ensure that the specification is met within the application. The capacitance can vary with DC bias conditions as well as temperature and frequency of operation. Capacitor values will also show some decrease over time due to aging. The capacitor parameters are also dependent on the particular case size, with smaller sizes giving poorer performance figures in general. As an example, Figure 27 shows a typical graph comparing different capacitor case sizes in a Capacitance vs. DC Bias plot. As shown in the graph, increasing the DC Bias condition can result in the capacitance value falling below the minimum value given in the recommended capacitor specifications table (0.7 µF in this case). Note that the graph shows the capacitance out of specification for the 0402 case size capacitor at higher bias voltages. It is therefore recommended that the capacitor manufacturers' specifications for the nominal value capacitor are consulted for all conditions, as some capacitor sizes (for example, 0402) may not be suitable in the actual application.

Copyright © 2005–2014, Texas Instruments Incorporated

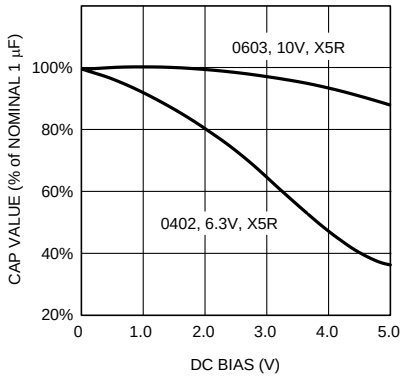

Figure 27. Typical Variation In Capacitance vs DC Bias

The value of the ceramic capacitor can vary with temperature. The capacitor type X7R, which operates over a temperature range of –55°C to 125°C, will only vary the capacitance to within ±15%. The capacitor type X5R has a similar tolerance over a reduced temperature range of –55°C to 85°C. Many large value ceramic capacitors, larger than 1 µF are manufactured with Z5U or Y5V temperature characteristics. Their capacitance can drop by more than 50% as the temperature varies from 25°C to 85°C. Therefore, X7R and X5R types are recommended over Z5U and Y5V in applications where the ambient temperature will change significantly above or below 25°C.

Tantalum capacitors are less desirable than ceramic for use as output capacitors because they are more costly when comparing equivalent capacitance and voltage ratings in the 0.47-µF to 4.7-µF range.

Another important consideration is that tantalum capacitors have higher ESR values than equivalent size ceramics. This means that while it may be possible to find a tantalum capacitor with an ESR value within the stable range, it would have to be larger in capacitance (which means bigger and more costly) than a ceramic capacitor with the same ESR value. It should also be noted that the ESR of a typical tantalum will increase about 2:1 as the temperature goes from 25°C down to –40°C, so some guard band must be allowed.

9.2.2.7 RFI/EMI Susceptibility

RFI (radio frequency interference) and EMI (electromagnetic interference) can degrade any integrated circuit's performance because of the small dimensions of the geometries inside the device. In applications where circuit sources are present which generate signals with significant high frequency energy content (> 1 MHz), care must be taken to ensure that this does not affect the IC regulator.

If RFI/EMI noise is present on the input side of the regulator (such as applications where the input source comes from the output of a switching regulator), good ceramic bypass capacitors must be used at the input pin of the IC.

If a load is connected to the IC output which switches at high speed (such as a clock), the high-frequency current pulses required by the load must be supplied by the capacitors on the IC output. Because the bandwidth of the regulator loop is less than 100 kHz, the control circuitry cannot respond to load changes above that frequency. This means the effective output impedance of the IC at frequencies above 100 kHz is determined only by the output capacitors.

In applications where the load is switching at high speed, the output of the IC may need RF isolation from the load. It is recommended that some inductance be placed between the output capacitor and the load, and good RF bypass capacitors be placed directly across the load.

PCB layout is also critical in high noise environments, because RFI/EMI is easily radiated directly into PC traces. Noisy circuitry should be isolated from *clean* circuits where possible, and grounded through a separate path. At MHz frequencies, ground planes begin to look inductive and RFI/ EMI can cause ground bounce across the ground plane. In multi-layer PCB applications, care should be taken in layout so that noisy power and ground planes do not radiate directly into adjacent layers which carry analog power and ground.

Copyright © 2005–2014, Texas Instruments Incorporated

9.2.2.8 Output Noise

Noise is specified in two ways: **Spot Noise** or **Output Noise Density** is the RMS sum of all noise sources, measured at the regulator output, at a specific frequency (measured with a 1Hz bandwidth). This type of noise is usually plotted on a curve as a function of frequency. **Total Output Noise** or **Broad-Band Noise** is the RMS sum of spot noise over a specified bandwidth, usually several decades of frequencies.

Attention should be paid to the units of measurement. Spot noise is measured in units µV/root-Hz or nV/root-Hz and total output noise is measured in µV(rms).

The primary source of noise in low-dropout regulators is the internal reference. Noise can be reduced in two ways: by increasing the transistor area or by increasing the current drawn by the internal reference. Increasing the area will decrease the chance of fitting the die into a smaller package. Increasing the current drawn by the internal reference increases the total supply current (ground pin current).

9.2.3 Application Curves

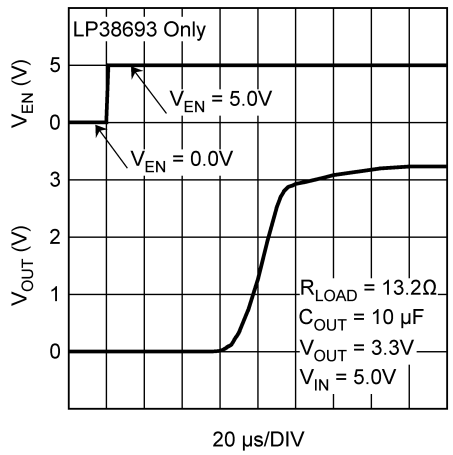

Figure 28. V_{OUT} vs V_{EN}, ON (LP38693 Only)

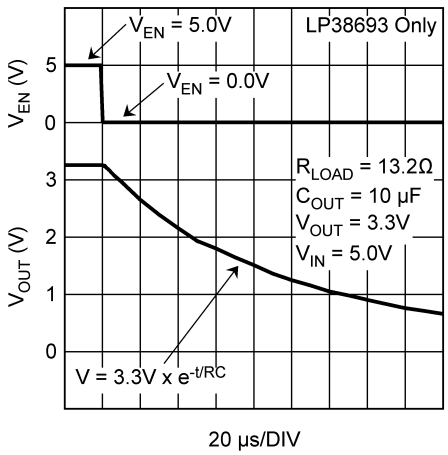

Figure 29. V_{OUT} vs V_{EN}, OFF (LP38693 Only)

Copyright © 2005–2014, Texas Instruments Incorporated

10 Power Supply Recommendations

The LP3869x is designed to operate from an input supply voltage range of 2.7 V to 10 V. The input supply should be well regulated and free of spurious noise. To ensure that the LP3869x output voltage is well regulated, the input supply should be at least VOUT + 0.5 V, or 2.7 V, whichever is higher. A minimum capacitor value of 1-µF is required to be within 1 cm of the IN pin.

11 Layout

11.1 Layout Guidelines

The dynamic performance of the LP3869x is dependent on the layout of the PCB. PCB layout practices that are adequate for typical LDOs may degrade the load regulation, PSRR, noise, or transient performance of the LP3869x.

Best performance is achieved by placing C_{IN} and C_{OUT} on the same side of the PCB as the LP3869x, and as close as is practical to the package. The ground connections for C_{IN} and C_{OUT} should be back to the LP3869x ground pin using as wide, and as short, a copper trace as is practical.

Connections using long trace lengths, narrow trace widths, and/or connections through vias should be avoided. These will add parasitic inductances and resistance that results in inferior performance especially during transient conditions.

A Ground Plane, either on the opposite side of a two-layer PCB, or embedded in a multi-layer PCB, is strongly recommended. This Ground Plane serves two purposes:

- Provides a circuit reference plane to assure accuracy.
- Provides a thermal plane to remove heat from the LP3869x WSON package through thermal vias under the package DAP.

11.1.1 WSON Mounting

The NGG0006A (No Pullback) 6-Lead WSON package requires specific mounting techniques which are detailed in the TI *AN-1187 Application Report* SNOA401. Referring to the section PCB Design Recommendations (Page 5), it should be noted that the pad style which should be used with the WSON package is the NSMD (non-solder mask defined) type. Additionally, it is recommended the PCB terminal pads to be 0.2-mm longer than the package pads to create a solder fillet to improve reliability and inspection.

The input current is split between two V_{IN} pins, 1 and 6. The two V_{IN} pins must be connected together to ensure that the device can meet all specifications at the rated current.

The thermal dissipation of the WSON package is directly related to the printed circuit board construction and the amount of additional copper area connected to the DAP.

The DAP (exposed pad) on the bottom of the WSON package is connected to the die substrate with a conductive die attach adhesive. The DAP has no direct electrical (wire) connection to any of the pins. There is a parasitic PN junction between the die substrate and the device ground. As such, it is strongly recommend that the DAP be connected directly to the ground at device lead 2 (that is, GND). Alternately, but not recommended, the DAP may be left floating (that is, no electrical connection). The DAP must not be connected to any potential other than ground.

Copyright © 2005–2014, Texas Instruments Incorporated

11.2 Layout Example

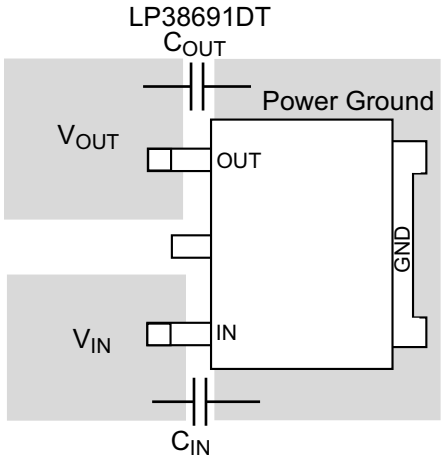

Figure 30. TO-252 Package

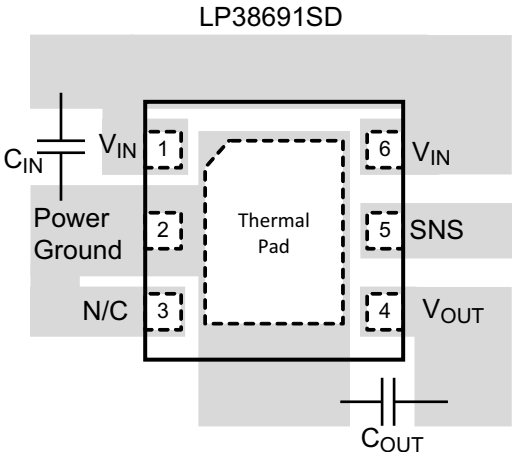

Figure 31. WSON LP38691D Package

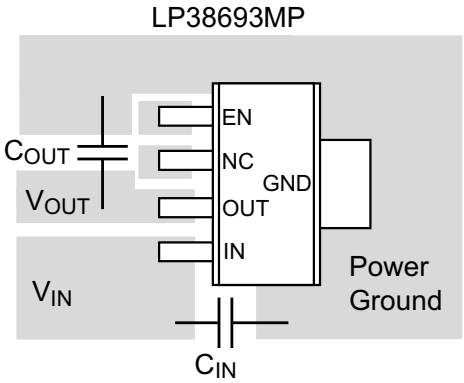

Figure 32. SOT-223 Package

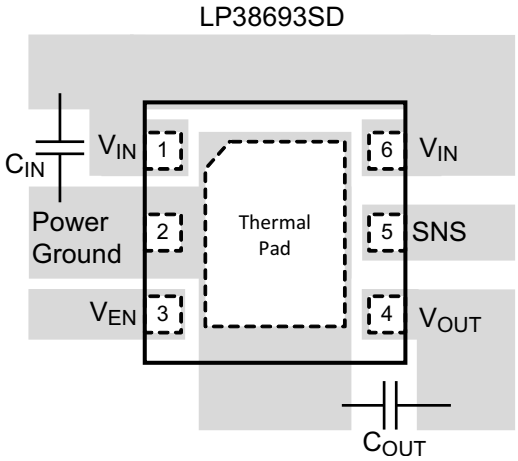

Figure 33. WSON LP38693SD Package

版权 © 2005–2014, Texas Instruments Incorporated

12 器件和文档支持

12.1 相关链接

以下表格列出了快速访问链接。 范围包括技术文档、支持与社区资源、工具和软件，并且可以快速访问样片或购买链接。

表 **2.** 相关链接

器件	产品文件夹	样片与购买	技术文档	工具与软件	支持与社区
LP38691	请单击此处	请单击此处	请单击此处	请单击此处	请单击此处
LP38693	请单击此处	请单击此处	请单击此处	请单击此处	请单击此处
LP38691-Q1	请单击此处	请单击此处	请单击此处	请单击此处	请单击此处
LP38693-Q1	请单击此处	请单击此处	请单击此处	请单击此处	请单击此处

12.2 商标

All trademarks are the property of their respective owners.

12.3 静电放电警告

这些装置包含有限的内置 ESD 保护。 存储或装卸时，应将导线一起截短或将装置放置于导电泡棉中，以防止 MOS 门极遭受静电损伤。

12.4 术语表

SLYZ022 — *TI 术语表*。

这份术语表列出并解释术语、首字母缩略词和定义。

13 机械封装和可订购信息

以下页中包括机械封装和可订购信息。 这些信息是针对指定器件可提供的最新数据。 这些数据会在无通知且不对本文档进行修订的情况下发生改变。 欲获得该数据表的浏览器版本，请查阅左侧的导航栏。

PACKAGING INFORMATION

Orderable Device	Status (1)	Package Type	Package Drawing	Pins	Package Qty	Eco Plan (2)	Lead finish/ Ball material (6)	MSL Peak Temp (3)	Op Temp (°C)	Device Marking (4/5)	Samples
LP38691DT-1.8	NRND	TO-252	NDP	3	75	Non-RoHS & Green	Call TI	Level-1-235C-UNLIM	-40 to 125	LP38691 DT-1.8	
LP38691DT-1.8/NOPB	ACTIVE	TO-252	NDP	3	75	RoHS & Green	SN	Level-2-260C-1 YEAR	-40 to 125	LP38691 DT-1.8	Samples
LP38691DT-2.5/NOPB	ACTIVE	TO-252	NDP	3	75	RoHS & Green	SN	Level-2-260C-1 YEAR	-40 to 125	LP38691 DT-2.5	Samples
LP38691DT-3.3	NRND	TO-252	NDP	3	75	Non-RoHS & Green	Call TI	Level-1-235C-UNLIM	-40 to 125	LP38691 DT-3.3	
LP38691DT-3.3/NOPB	ACTIVE	TO-252	NDP	3	75	RoHS & Green	SN	Level-2-260C-1 YEAR	-40 to 125	LP38691 DT-3.3	Samples
LP38691DT-5.0/NOPB	ACTIVE	TO-252	NDP	3	75	RoHS & Green	SN	Level-2-260C-1 YEAR	-40 to 125	LP38691 DT-5.0	Samples
LP38691DTX-1.8/NOPB	ACTIVE	TO-252	NDP	3	2500	RoHS & Green	SN	Level-2-260C-1 YEAR	-40 to 125	LP38691 DT-1.8	Samples
LP38691DTX-2.5/NOPB	ACTIVE	TO-252	NDP	3	2500	RoHS & Green	SN	Level-2-260C-1 YEAR	-40 to 125	LP38691 DT-2.5	Samples
LP38691DTX-3.3/NOPB	ACTIVE	TO-252	NDP	3	2500	RoHS & Green	SN	Level-2-260C-1 YEAR	-40 to 125	LP38691 DT-3.3	Samples
LP38691DTX-5.0/NOPB	ACTIVE	TO-252	NDP	3	2500	RoHS & Green	SN	Level-2-260C-1 YEAR	-40 to 125	LP38691 DT-5.0	Samples
LP38691QSD-1.8/NOPB	ACTIVE	WSON	NGG	6	1000	RoHS & Green	SN	Level-1-260C-UNLIM	-40 to 125	L256B	Samples
LP38691QSD-2.5/NOPB	ACTIVE	WSON	NGG	6	1000	RoHS & Green	SN	Level-1-260C-UNLIM	-40 to 125	L257B	Samples
LP38691QSD-3.3/NOPB	ACTIVE	WSON	NGG	6	1000	RoHS & Green	SN	Level-1-260C-UNLIM	-40 to 125	L258B	Samples
LP38691QSD-5.0/NOPB	ACTIVE	WSON	NGG	6	1000	RoHS & Green	SN	Level-1-260C-UNLIM	-40 to 125	L259B	Samples
LP38691QSDX-1.8/NOPB	ACTIVE	WSON	NGG	6	4500	RoHS & Green	SN	Level-1-260C-UNLIM	-40 to 125	L256B	Samples
LP38691QSDX-2.5/NOPB	ACTIVE	WSON	NGG	6	4500	RoHS & Green	SN	Level-1-260C-UNLIM	-40 to 125	L257B	Samples
LP38691QSDX-3.3/NOPB	ACTIVE	WSON	NGG	6	4500	RoHS & Green	SN	Level-1-260C-UNLIM	-40 to 125	L258B	Samples
LP38691QSDX-5.0/NOPB	ACTIVE	WSON	NGG	6	4500	RoHS & Green	SN	Level-1-260C-UNLIM	-40 to 125	L259B	Samples

Orderable Device	Status (1)	Package Type	Package Drawing	Pins	Package Qty	Eco Plan (2)	Lead finish/ Ball material (6)	MSL Peak Temp (3)	Op Temp (°C)	Device Marking (4/5)	Samples
LP38691SD-1.8/NOPB	ACTIVE	WSON	NGG	6	1000	RoHS & Green	NIPDAU | SN	Level-1-260C-UNLIM	-40 to 125	L118B	Samples
LP38691SD-2.5/NOPB	ACTIVE	WSON	NGG	6	1000	RoHS & Green	NIPDAU | SN	Level-1-260C-UNLIM	-40 to 125	L119B	Samples
LP38691SD-3.3/NOPB	ACTIVE	WSON	NGG	6	1000	RoHS & Green	NIPDAU | SN	Level-1-260C-UNLIM	-40 to 125	L120B	Samples
LP38691SD-5.0/NOPB	ACTIVE	WSON	NGG	6	1000	RoHS & Green	NIPDAU | SN	Level-1-260C-UNLIM	-40 to 125	L121B	Samples
LP38691SDX-1.8/NOPB	ACTIVE	WSON	NGG	6	4500	RoHS & Green	SN	Level-1-260C-UNLIM	-40 to 125	L118B	Samples
LP38691SDX-3.3/NOPB	ACTIVE	WSON	NGG	6	4500	RoHS & Green	SN	Level-1-260C-UNLIM	-40 to 125	L120B	Samples
LP38691SDX-5.0/NOPB	ACTIVE	WSON	NGG	6	4500	RoHS & Green	NIPDAU | SN	Level-1-260C-UNLIM	-40 to 125	L121B	Samples
LP38693MP-1.8/NOPB	ACTIVE	SOT-223	NDC	5	1000	RoHS & Green	SN	Level-1-260C-UNLIM	-40 to 125	LJVB	Samples
LP38693MP-2.5/NOPB	ACTIVE	SOT-223	NDC	5	1000	RoHS & Green	SN	Level-1-260C-UNLIM	-40 to 125	LJXB	Samples
LP38693MP-3.3	NRND	SOT-223	NDC	5	1000	Non-RoHS & Green	Call TI	Level-1-260C-UNLIM	-40 to 125	LJYB	
LP38693MP-3.3/NOPB	ACTIVE	SOT-223	NDC	5	1000	RoHS & Green	SN	Level-1-260C-UNLIM	-40 to 125	LJYB	Samples
LP38693MP-5.0/NOPB	ACTIVE	SOT-223	NDC	5	1000	RoHS & Green	SN	Level-1-260C-UNLIM	-40 to 125	LJZB	Samples
LP38693MPX-1.8/NOPB	ACTIVE	SOT-223	NDC	5	2000	RoHS & Green	SN	Level-1-260C-UNLIM	-40 to 125	LJVB	Samples
LP38693MPX-2.5/NOPB	ACTIVE	SOT-223	NDC	5	2000	RoHS & Green	SN	Level-1-260C-UNLIM	-40 to 125	LJXB	Samples
LP38693MPX-3.3/NOPB	ACTIVE	SOT-223	NDC	5	2000	RoHS & Green	SN	Level-1-260C-UNLIM	-40 to 125	LJYB	Samples
LP38693MPX-5.0/NOPB	ACTIVE	SOT-223	NDC	5	2000	RoHS & Green	SN	Level-1-260C-UNLIM	-40 to 125	LJZB	Samples
LP38693QSD-1.8/NOPB	ACTIVE	WSON	NGG	6	1000	RoHS & Green	SN	Level-1-260C-UNLIM	-40 to 125	L260B	Samples
LP38693QSD-2.5/NOPB	ACTIVE	WSON	NGG	6	1000	RoHS & Green	SN	Level-1-260C-UNLIM	-40 to 125	L261B	Samples
LP38693QSD-3.3/NOPB	ACTIVE	WSON	NGG	6	1000	RoHS & Green	SN	Level-1-260C-UNLIM	-40 to 125	L262B	Samples
LP38693QSD-5.0/NOPB	ACTIVE	WSON	NGG	6	1000	RoHS & Green	SN	Level-1-260C-UNLIM	-40 to 125	L263B	Samples
LP38693QSDX-1.8/NOPB	ACTIVE	WSON	NGG	6	4500	RoHS & Green	SN	Level-1-260C-UNLIM	-40 to 125	L260B	Samples

Orderable Device	Status (1)	Package Type	Package Drawing	Pins	Package Qty	Eco Plan (2)	Lead finish/ Ball material (6)	MSL Peak Temp (3)	Op Temp (°C)	Device Marking (4/5)	Samples
LP38693QSDX-2.5/NOPB	ACTIVE	WSON	NGG	6	4500	RoHS & Green	SN	Level-1-260C-UNLIM	-40 to 125	L261B	Samples
LP38693QSDX-3.3/NOPB	ACTIVE	WSON	NGG	6	4500	RoHS & Green	SN	Level-1-260C-UNLIM	-40 to 125	L262B	Samples
LP38693QSDX-5.0/NOPB	ACTIVE	WSON	NGG	6	4500	RoHS & Green	SN	Level-1-260C-UNLIM	-40 to 125	L263B	Samples
LP38693SD-1.8	NRND	WSON	NGG	6	1000	Non-RoHS & Green	Call TI	Level-1-260C-UNLIM	-40 to 125	L128B	
LP38693SD-1.8/NOPB	ACTIVE	WSON	NGG	6	1000	RoHS & Green	NIPDAU | SN	Level-1-260C-UNLIM	-40 to 125	L128B	Samples
LP38693SD-2.5/NOPB	ACTIVE	WSON	NGG	6	1000	RoHS & Green	SN	Level-1-260C-UNLIM	-40 to 125	L129B	Samples
LP38693SD-3.3	NRND	WSON	NGG	6	1000	Non-RoHS & Green	Call TI	Level-1-260C-UNLIM	-40 to 125	L130B	
LP38693SD-3.3/NOPB	ACTIVE	WSON	NGG	6	1000	RoHS & Green	NIPDAU | SN	Level-1-260C-UNLIM	-40 to 125	L130B	Samples
LP38693SD-5.0/NOPB	ACTIVE	WSON	NGG	6	1000	RoHS & Green	NIPDAU | SN	Level-1-260C-UNLIM	-40 to 125	L131B	Samples
LP38693SDX-3.3/NOPB	ACTIVE	WSON	NGG	6	4500	RoHS & Green	NIPDAU | SN	Level-1-260C-UNLIM	-40 to 125	L130B	Samples
LP38693SDX-5.0/NOPB	ACTIVE	WSON	NGG	6	4500	RoHS & Green	SN	Level-1-260C-UNLIM	-40 to 125	L131B	Samples

(1) The marketing status values are defined as follows:
ACTIVE: Product device recommended for new designs.
LIFEBUY: TI has announced that the device will be discontinued, and a lifetime-buy period is in effect.
NRND: Not recommended for new designs. Device is in production to support existing customers, but TI does not recommend using this part in a new design.
PREVIEW: Device has been announced but is not in production. Samples may or may not be available.
OBSOLETE: TI has discontinued the production of the device.

(2) **RoHS:** TI defines "RoHS" to mean semiconductor products that are compliant with the current EU RoHS requirements for all 10 RoHS substances, including the requirement that RoHS substance do not exceed 0.1% by weight in homogeneous materials. Where designed to be soldered at high temperatures, "RoHS" products are suitable for use in specified lead-free processes. TI may reference these types of products as "Pb-Free".
RoHS Exempt: TI defines "RoHS Exempt" to mean products that contain lead but are compliant with EU RoHS pursuant to a specific EU RoHS exemption.
Green: TI defines "Green" to mean the content of Chlorine (Cl) and Bromine (Br) based flame retardants meet JS709B low halogen requirements of <=1000ppm threshold. Antimony trioxide based flame retardants must also meet the <=1000ppm threshold requirement.

(3) MSL, Peak Temp. - The Moisture Sensitivity Level rating according to the JEDEC industry standard classifications, and peak solder temperature.

(4) There may be additional marking, which relates to the logo, the lot trace code information, or the environmental category on the device.

(5) Multiple Device Markings will be inside parentheses. Only one Device Marking contained in parentheses and separated by a "~" will appear on a device. If a line is indented then it is a continuation of the previous line and the two combined represent the entire Device Marking for that device.

(6) Lead finish/Ball material - Orderable Devices may have multiple material finish options. Finish options are separated by a vertical ruled line. Lead finish/Ball material values may wrap to two lines if the finish value exceeds the maximum column width.

Important Information and Disclaimer: The information provided on this page represents TI's knowledge and belief as of the date that it is provided. TI bases its knowledge and belief on information provided by third parties, and makes no representation or warranty as to the accuracy of such information. Efforts are underway to better integrate information from third parties. TI has taken and continues to take reasonable steps to provide representative and accurate information but may not have conducted destructive testing or chemical analysis on incoming materials and chemicals. TI and TI suppliers consider certain information to be proprietary, and thus CAS numbers and other limited information may not be available for release.

In no event shall TI's liability arising out of such information exceed the total purchase price of the TI part(s) at issue in this document sold by TI to Customer on an annual basis.

OTHER QUALIFIED VERSIONS OF LP38691, LP38691-Q1, LP38693, LP38693-Q1 :

- Catalog : LP38691, LP38693
- Automotive : LP38691-Q1, LP38693-Q1

NOTE: Qualified Version Definitions:

- Catalog - TI's standard catalog product
- Automotive - Q100 devices qualified for high-reliability automotive applications targeting zero defects

TAPE AND REEL INFORMATION

REEL DIMENSIONS

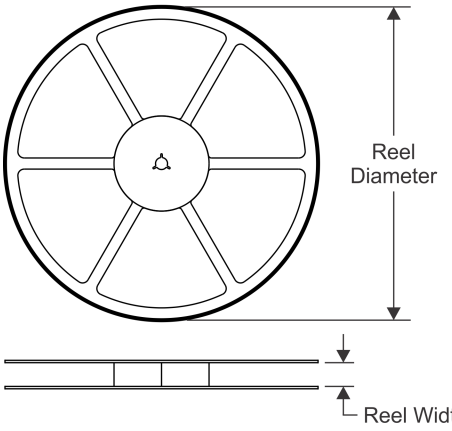

TAPE DIMENSIONS

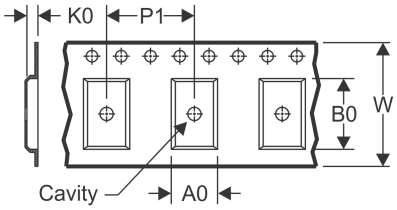

A0	Dimension designed to accommodate the component width
B0	Dimension designed to accommodate the component length
K0	Dimension designed to accommodate the component thickness
W	Overall width of the carrier tape
P1	Pitch between successive cavity centers

QUADRANT ASSIGNMENTS FOR PIN 1 ORIENTATION IN TAPE

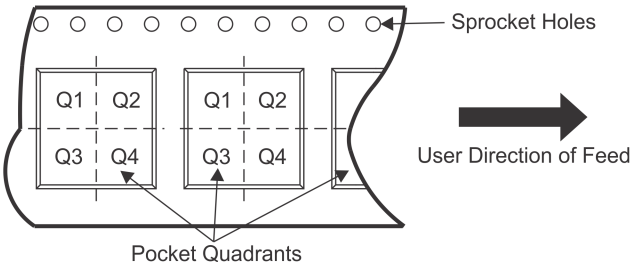

*All dimensions are nominal

Device	Package Type	Package Drawing	Pins	SPQ	Reel Diameter (mm)	Reel Width W1 (mm)	A0 (mm)	B0 (mm)	K0 (mm)	P1 (mm)	W (mm)	Pin1 Quadrant
LP38691DTX-1.8/NOPB	TO-252	NDP	3	2500	330.0	16.4	6.9	10.5	2.7	8.0	16.0	Q2
LP38691DTX-2.5/NOPB	TO-252	NDP	3	2500	330.0	16.4	6.9	10.5	2.7	8.0	16.0	Q2
LP38691DTX-3.3/NOPB	TO-252	NDP	3	2500	330.0	16.4	6.9	10.5	2.7	8.0	16.0	Q2
LP38691DTX-5.0/NOPB	TO-252	NDP	3	2500	330.0	16.4	6.9	10.5	2.7	8.0	16.0	Q2
LP38691QSD-1.8/NOPB	WSON	NGG	6	1000	178.0	12.4	3.3	3.3	1.0	8.0	12.0	Q1
LP38691QSD-2.5/NOPB	WSON	NGG	6	1000	178.0	12.4	3.3	3.3	1.0	8.0	12.0	Q1
LP38691QSD-3.3/NOPB	WSON	NGG	6	1000	178.0	12.4	3.3	3.3	1.0	8.0	12.0	Q1
LP38691QSD-5.0/NOPB	WSON	NGG	6	1000	178.0	12.4	3.3	3.3	1.0	8.0	12.0	Q1
LP38691QSDX-1.8/NOPB	WSON	NGG	6	4500	330.0	12.4	3.3	3.3	1.0	8.0	12.0	Q1
LP38691QSDX-2.5/NOPB	WSON	NGG	6	4500	330.0	12.4	3.3	3.3	1.0	8.0	12.0	Q1
LP38691QSDX-3.3/NOPB	WSON	NGG	6	4500	330.0	12.4	3.3	3.3	1.0	8.0	12.0	Q1
LP38691QSDX-5.0/NOPB	WSON	NGG	6	4500	330.0	12.4	3.3	3.3	1.0	8.0	12.0	Q1
LP38691SD-1.8/NOPB	WSON	NGG	6	1000	180.0	12.4	3.3	3.3	1.0	8.0	12.0	Q1
LP38691SD-2.5/NOPB	WSON	NGG	6	1000	180.0	12.4	3.3	3.3	1.0	8.0	12.0	Q1
LP38691SD-3.3/NOPB	WSON	NGG	6	1000	180.0	12.4	3.3	3.3	1.0	8.0	12.0	Q1
LP38691SD-5.0/NOPB	WSON	NGG	6	1000	180.0	12.4	3.3	3.3	1.0	8.0	12.0	Q1
LP38691SDX-1.8/NOPB	WSON	NGG	6	4500	330.0	12.4	3.3	3.3	1.0	8.0	12.0	Q1
LP38691SDX-3.3/NOPB	WSON	NGG	6	4500	330.0	12.4	3.3	3.3	1.0	8.0	12.0	Q1

Device	Package Type	Package Drawing	Pins	SPQ	Reel Diameter (mm)	Reel Width W1 (mm)	A0 (mm)	B0 (mm)	K0 (mm)	P1 (mm)	W (mm)	Pin1 Quadrant
LP38691SDX-5.0/NOPB	WSON	NGG	6	4500	330.0	12.4	3.3	3.3	1.0	8.0	12.0	Q1
LP38693MP-1.8/NOPB	SOT-223	NDC	5	1000	330.0	16.4	7.0	7.5	2.2	12.0	16.0	Q3
LP38693MP-2.5/NOPB	SOT-223	NDC	5	1000	330.0	16.4	7.0	7.5	2.2	12.0	16.0	Q3
LP38693MP-3.3	SOT-223	NDC	5	1000	330.0	16.4	7.0	7.5	2.2	12.0	16.0	Q3
LP38693MP-3.3/NOPB	SOT-223	NDC	5	1000	330.0	16.4	7.0	7.5	2.2	12.0	16.0	Q3
LP38693MP-5.0/NOPB	SOT-223	NDC	5	1000	330.0	16.4	7.0	7.5	2.2	12.0	16.0	Q3
LP38693MPX-1.8/NOPB	SOT-223	NDC	5	2000	330.0	16.4	7.0	7.5	2.2	12.0	16.0	Q3
LP38693MPX-2.5/NOPB	SOT-223	NDC	5	2000	330.0	16.4	7.0	7.5	2.2	12.0	16.0	Q3
LP38693MPX-3.3/NOPB	SOT-223	NDC	5	2000	330.0	16.4	7.0	7.5	2.2	12.0	16.0	Q3
LP38693MPX-5.0/NOPB	SOT-223	NDC	5	2000	330.0	16.4	7.0	7.5	2.2	12.0	16.0	Q3
LP38693QSD-1.8/NOPB	WSON	NGG	6	1000	178.0	12.4	3.3	3.3	1.0	8.0	12.0	Q1
LP38693QSD-2.5/NOPB	WSON	NGG	6	1000	178.0	12.4	3.3	3.3	1.0	8.0	12.0	Q1
LP38693QSD-3.3/NOPB	WSON	NGG	6	1000	178.0	12.4	3.3	3.3	1.0	8.0	12.0	Q1
LP38693QSD-5.0/NOPB	WSON	NGG	6	1000	178.0	12.4	3.3	3.3	1.0	8.0	12.0	Q1
LP38693QSDX-1.8/NOPB	WSON	NGG	6	4500	330.0	12.4	3.3	3.3	1.0	8.0	12.0	Q1
LP38693QSDX-2.5/NOPB	WSON	NGG	6	4500	330.0	12.4	3.3	3.3	1.0	8.0	12.0	Q1
LP38693QSDX-3.3/NOPB	WSON	NGG	6	4500	330.0	12.4	3.3	3.3	1.0	8.0	12.0	Q1
LP38693QSDX-5.0/NOPB	WSON	NGG	6	4500	330.0	12.4	3.3	3.3	1.0	8.0	12.0	Q1
LP38693SD-1.8	WSON	NGG	6	1000	178.0	12.4	3.3	3.3	1.0	8.0	12.0	Q1
LP38693SD-1.8/NOPB	WSON	NGG	6	1000	180.0	12.4	3.3	3.3	1.0	8.0	12.0	Q1
LP38693SD-2.5/NOPB	WSON	NGG	6	1000	178.0	12.4	3.3	3.3	1.0	8.0	12.0	Q1
LP38693SD-3.3	WSON	NGG	6	1000	178.0	12.4	3.3	3.3	1.0	8.0	12.0	Q1
LP38693SD-3.3/NOPB	WSON	NGG	6	1000	178.0	12.4	3.3	3.3	1.0	8.0	12.0	Q1
LP38693SD-3.3/NOPB	WSON	NGG	6	1000	180.0	12.4	3.3	3.3	1.0	8.0	12.0	Q1
LP38693SD-5.0/NOPB	WSON	NGG	6	1000	178.0	12.4	3.3	3.3	1.0	8.0	12.0	Q1
LP38693SD-5.0/NOPB	WSON	NGG	6	1000	180.0	12.4	3.3	3.3	1.0	8.0	12.0	Q1
LP38693SDX-3.3/NOPB	WSON	NGG	6	4500	330.0	12.4	3.3	3.3	1.0	8.0	12.0	Q1
LP38693SDX-5.0/NOPB	WSON	NGG	6	4500	330.0	12.4	3.3	3.3	1.0	8.0	12.0	Q1

TAPE AND REEL BOX DIMENSIONS

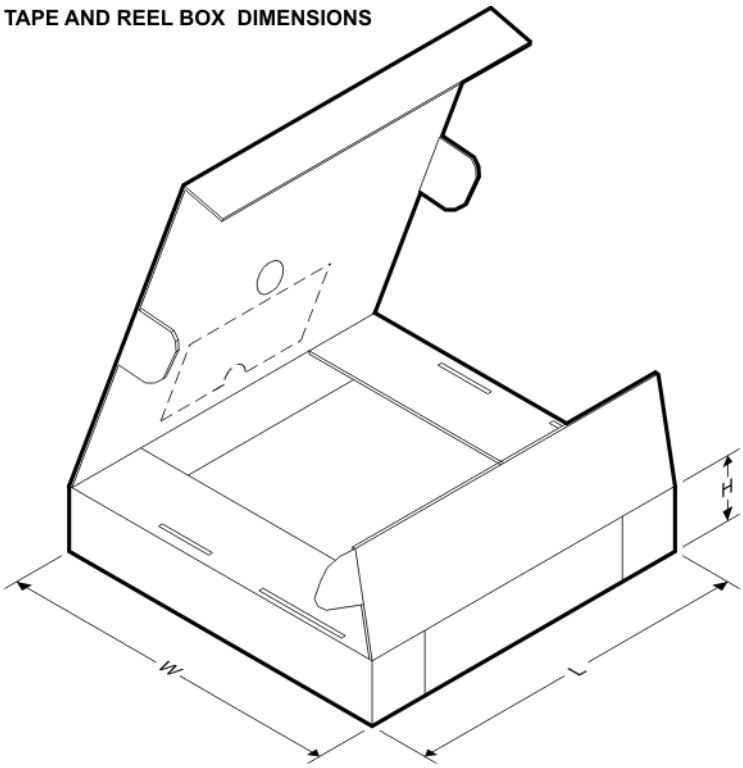

*All dimensions are nominal

Device	Package Type	Package Drawing	Pins	SPQ	Length (mm)	Width (mm)	Height (mm)
LP38691DTX-1.8/NOPB	TO-252	NDP	3	2500	853.0	449.0	35.0
LP38691DTX-2.5/NOPB	TO-252	NDP	3	2500	853.0	449.0	35.0
LP38691DTX-3.3/NOPB	TO-252	NDP	3	2500	853.0	449.0	35.0
LP38691DTX-5.0/NOPB	TO-252	NDP	3	2500	853.0	449.0	35.0
LP38691QSD-1.8/NOPB	WSON	NGG	6	1000	208.0	191.0	35.0
LP38691QSD-2.5/NOPB	WSON	NGG	6	1000	208.0	191.0	35.0
LP38691QSD-3.3/NOPB	WSON	NGG	6	1000	208.0	191.0	35.0
LP38691QSD-5.0/NOPB	WSON	NGG	6	1000	208.0	191.0	35.0
LP38691QSDX-1.8/NOPB	WSON	NGG	6	4500	367.0	367.0	35.0
LP38691QSDX-2.5/NOPB	WSON	NGG	6	4500	367.0	367.0	35.0
LP38691QSDX-3.3/NOPB	WSON	NGG	6	4500	367.0	367.0	35.0
LP38691QSDX-5.0/NOPB	WSON	NGG	6	4500	367.0	367.0	35.0
LP38691SD-1.8/NOPB	WSON	NGG	6	1000	200.0	183.0	25.0
LP38691SD-2.5/NOPB	WSON	NGG	6	1000	200.0	183.0	25.0
LP38691SD-3.3/NOPB	WSON	NGG	6	1000	200.0	183.0	25.0
LP38691SD-5.0/NOPB	WSON	NGG	6	1000	200.0	183.0	25.0
LP38691SDX-1.8/NOPB	WSON	NGG	6	4500	367.0	367.0	35.0
LP38691SDX-3.3/NOPB	WSON	NGG	6	4500	367.0	367.0	35.0
LP38691SDX-5.0/NOPB	WSON	NGG	6	4500	346.0	346.0	35.0
LP38693MP-1.8/NOPB	SOT-223	NDC	5	1000	367.0	367.0	35.0

Device	Package Type	Package Drawing	Pins	SPQ	Length (mm)	Width (mm)	Height (mm)
LP38693MP-2.5/NOPB	SOT-223	NDC	5	1000	367.0	367.0	35.0
LP38693MP-3.3	SOT-223	NDC	5	1000	367.0	367.0	35.0
LP38693MP-3.3/NOPB	SOT-223	NDC	5	1000	367.0	367.0	35.0
LP38693MP-5.0/NOPB	SOT-223	NDC	5	1000	367.0	367.0	35.0
LP38693MPX-1.8/NOPB	SOT-223	NDC	5	2000	367.0	367.0	35.0
LP38693MPX-2.5/NOPB	SOT-223	NDC	5	2000	367.0	367.0	35.0
LP38693MPX-3.3/NOPB	SOT-223	NDC	5	2000	367.0	367.0	35.0
LP38693MPX-5.0/NOPB	SOT-223	NDC	5	2000	367.0	367.0	35.0
LP38693QSD-1.8/NOPB	WSON	NGG	6	1000	208.0	191.0	35.0
LP38693QSD-2.5/NOPB	WSON	NGG	6	1000	208.0	191.0	35.0
LP38693QSD-3.3/NOPB	WSON	NGG	6	1000	208.0	191.0	35.0
LP38693QSD-5.0/NOPB	WSON	NGG	6	1000	208.0	191.0	35.0
LP38693QSDX-1.8/NOPB	WSON	NGG	6	4500	367.0	367.0	35.0
LP38693QSDX-2.5/NOPB	WSON	NGG	6	4500	367.0	367.0	35.0
LP38693QSDX-3.3/NOPB	WSON	NGG	6	4500	367.0	367.0	35.0
LP38693QSDX-5.0/NOPB	WSON	NGG	6	4500	367.0	367.0	35.0
LP38693SD-1.8	WSON	NGG	6	1000	208.0	191.0	35.0
LP38693SD-1.8/NOPB	WSON	NGG	6	1000	200.0	183.0	25.0
LP38693SD-2.5/NOPB	WSON	NGG	6	1000	208.0	191.0	35.0
LP38693SD-3.3	WSON	NGG	6	1000	208.0	191.0	35.0
LP38693SD-3.3/NOPB	WSON	NGG	6	1000	208.0	191.0	35.0
LP38693SD-3.3/NOPB	WSON	NGG	6	1000	200.0	183.0	25.0
LP38693SD-5.0/NOPB	WSON	NGG	6	1000	208.0	191.0	35.0
LP38693SD-5.0/NOPB	WSON	NGG	6	1000	200.0	183.0	25.0
LP38693SDX-3.3/NOPB	WSON	NGG	6	4500	346.0	346.0	35.0
LP38693SDX-5.0/NOPB	WSON	NGG	6	4500	367.0	367.0	35.0

TUBE

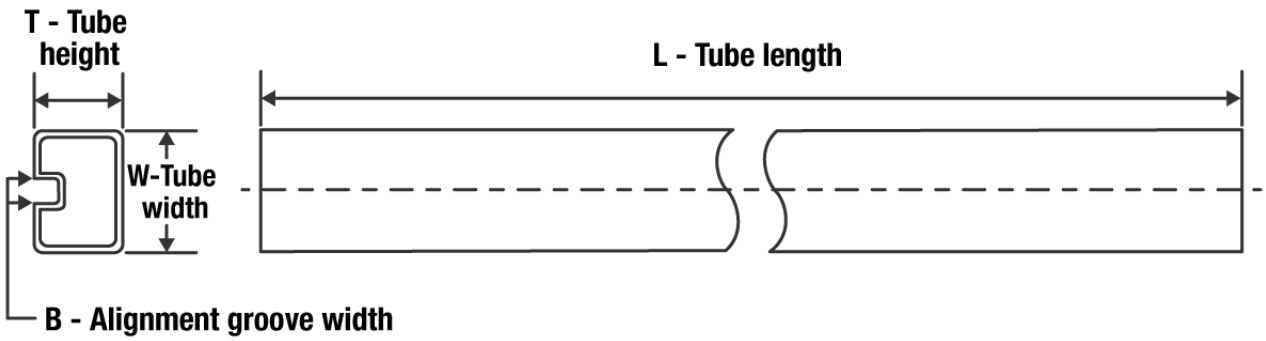

*All dimensions are nominal

Device	Package Name	Package Type	Pins	SPQ	L (mm)	W (mm)	T (µm)	B (mm)
LP38691DT-1.8	NDP	TO-252	3	75	508	20	4165.6	3.1
LP38691DT-1.8	NDP	TO-252	3	75	508	20	4165.6	3.1
LP38691DT-1.8/NOPB	NDP	TO-252	3	75	508	20	4165.6	3.1
LP38691DT-2.5/NOPB	NDP	TO-252	3	75	508	20	4165.6	3.1
LP38691DT-3.3	NDP	TO-252	3	75	508	20	4165.6	3.1
LP38691DT-3.3	NDP	TO-252	3	75	508	20	4165.6	3.1
LP38691DT-3.3/NOPB	NDP	TO-252	3	75	508	20	4165.6	3.1
LP38691DT-5.0/NOPB	NDP	TO-252	3	75	508	20	4165.6	3.1

NDC0005A

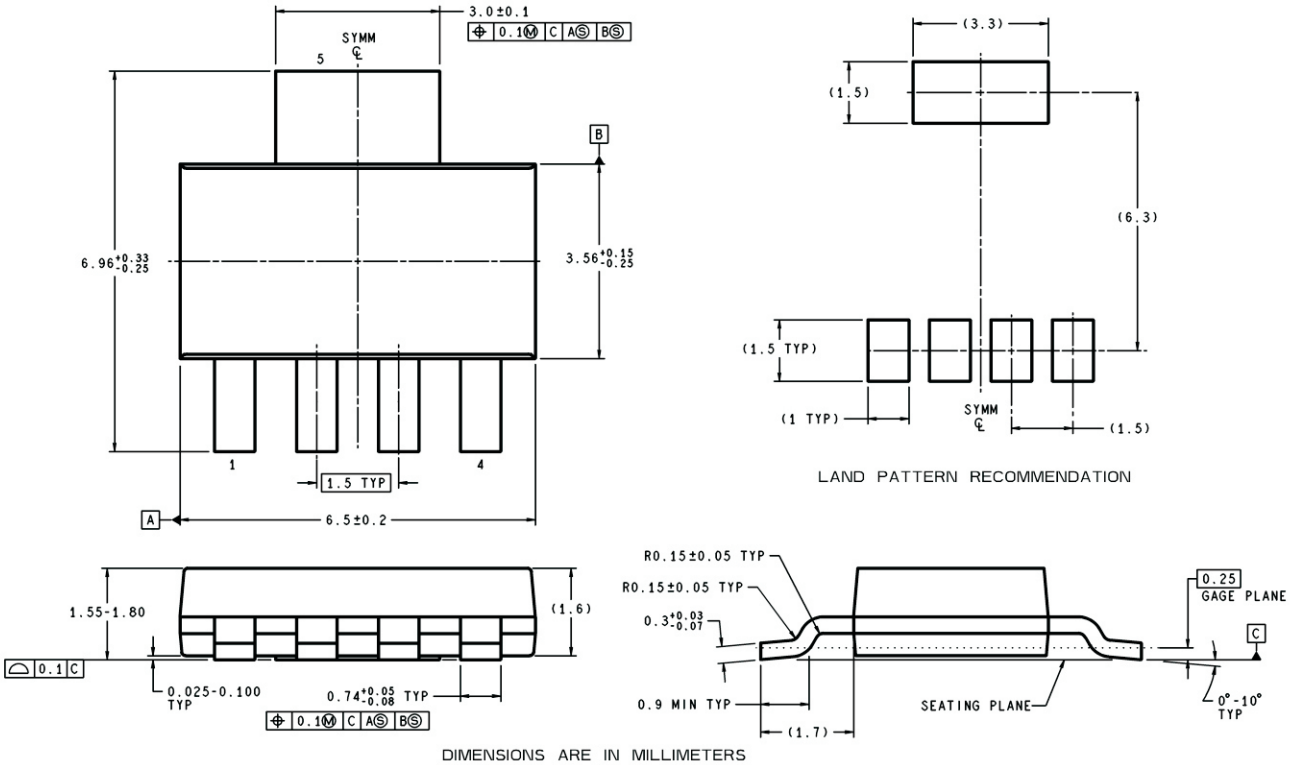
3.0±0.1
0.1 M C A S B S
SYMM
5
B
6.96 +0.33 -0.25
3.56 +0.15 -0.25
1
4
1.5 TYP
A
6.5±0.2
(3.3)
(1.5)
(6.3)
(1.5 TYP)
(1 TYP)
SYMM
(1.5)
LAND PATTERN RECOMMENDATION
1.55-1.80
(1.6)
0.1 C
0.025-0.100 TYP
0.74 +0.05 -0.08 TYP
0.1 M C A S B S
R0.15±0.05 TYP
R0.15±0.05 TYP
0.3 +0.03 -0.07
0.9 MIN TYP
(1.7)
SEATING PLANE
0.25
GAGE PLANE
C
0°-10° TYP
DIMENSIONS ARE IN MILLIMETERS
MP05A (Rev A)

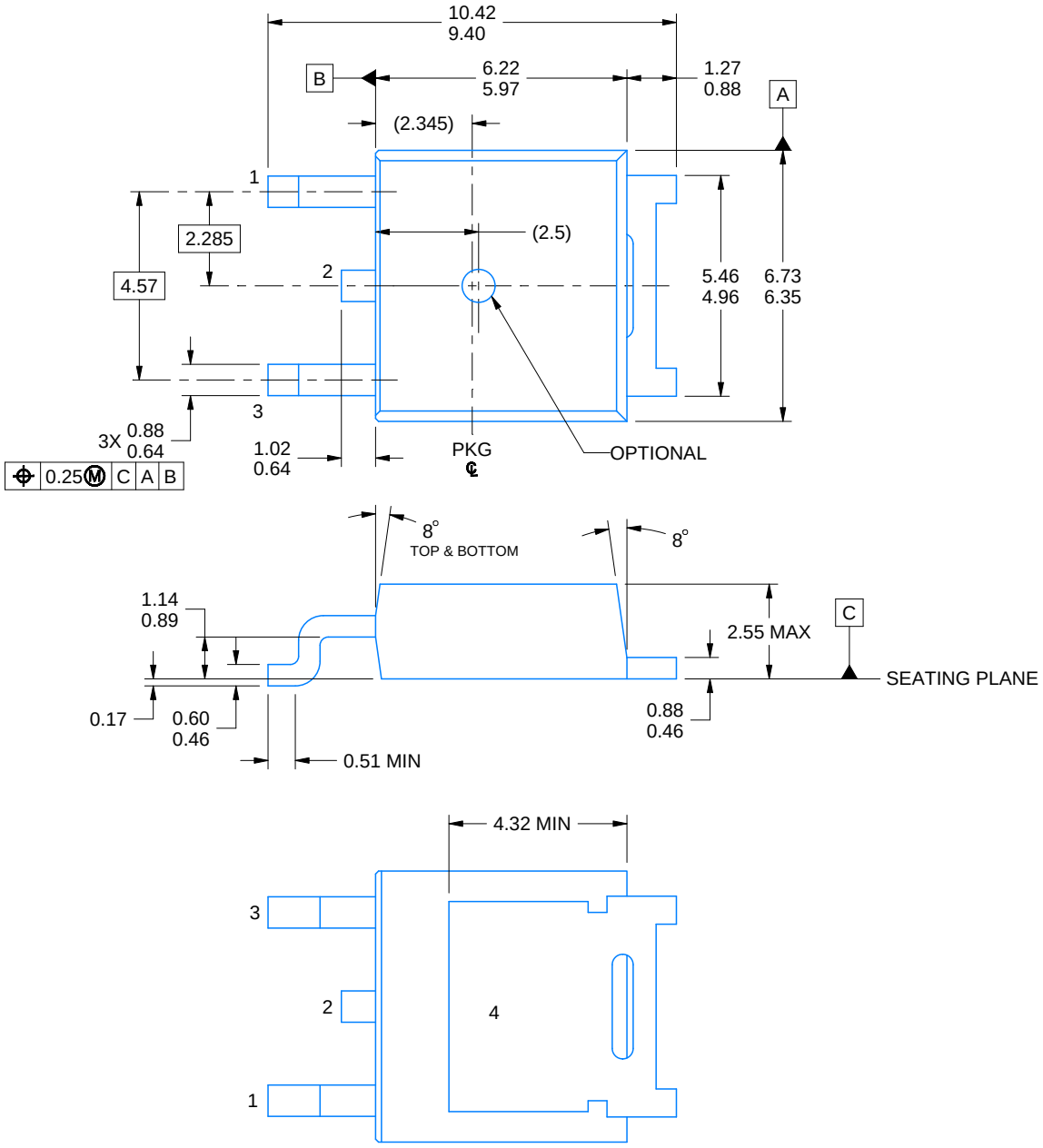

4219870/A 03/2018

NOTES:

1. All linear dimensions are in millimeters. Any dimensions in parenthesis are for reference only. Dimensioning and tolerancing per ASME Y14.5M.
2. This drawing is subject to change without notice.
3. Reference JEDEC registration TO-252.

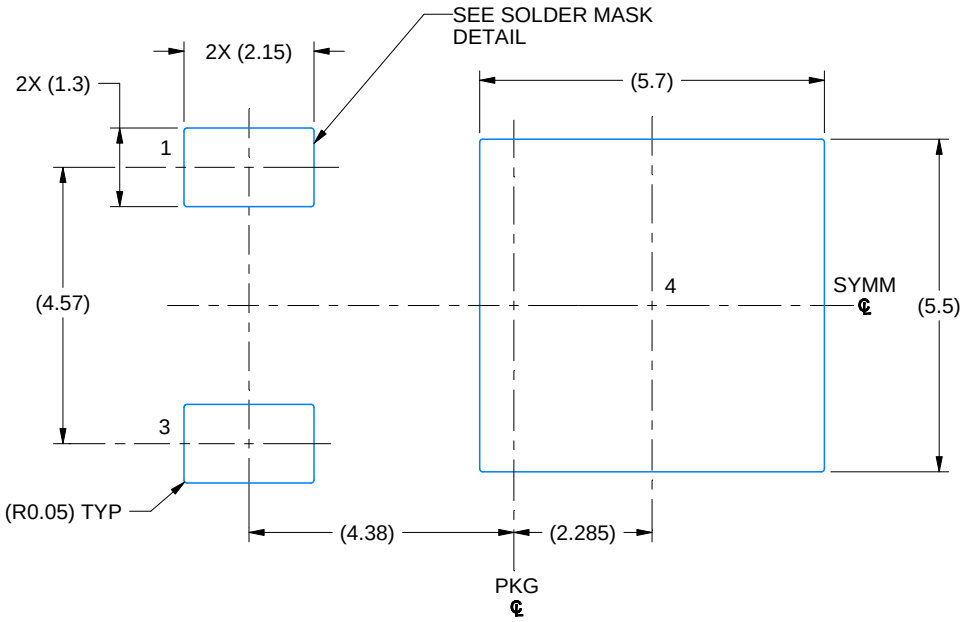

LAND PATTERN EXAMPLE
EXPOSED METAL SHOWN
SCALE: 8X

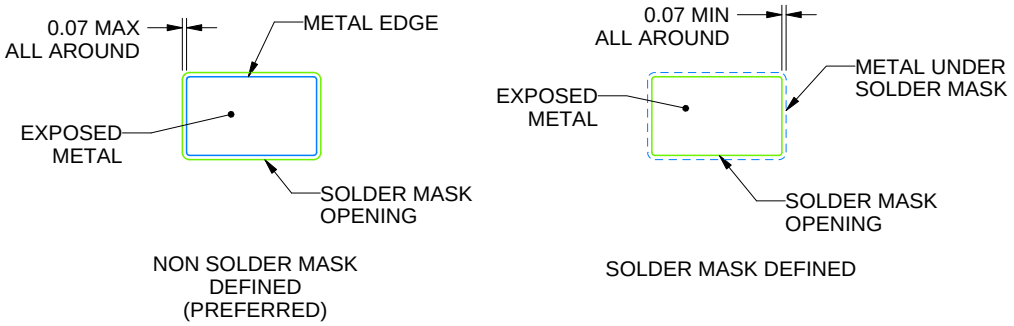

SOLDER MASK DETAIL

4219870/A 03/2018

NOTES: (continued)

4. This package is designed to be soldered to a thermal pad on the board. For more information, see Texas Instruments literature numbers SLMA002(www.ti.com/lit/slm002) and SLMA004 (www.ti.com/lit/slma004).
5. Vias are optional depending on application, refer to device data sheet. It is recommended that vias under paste be filled, plugged or tented.

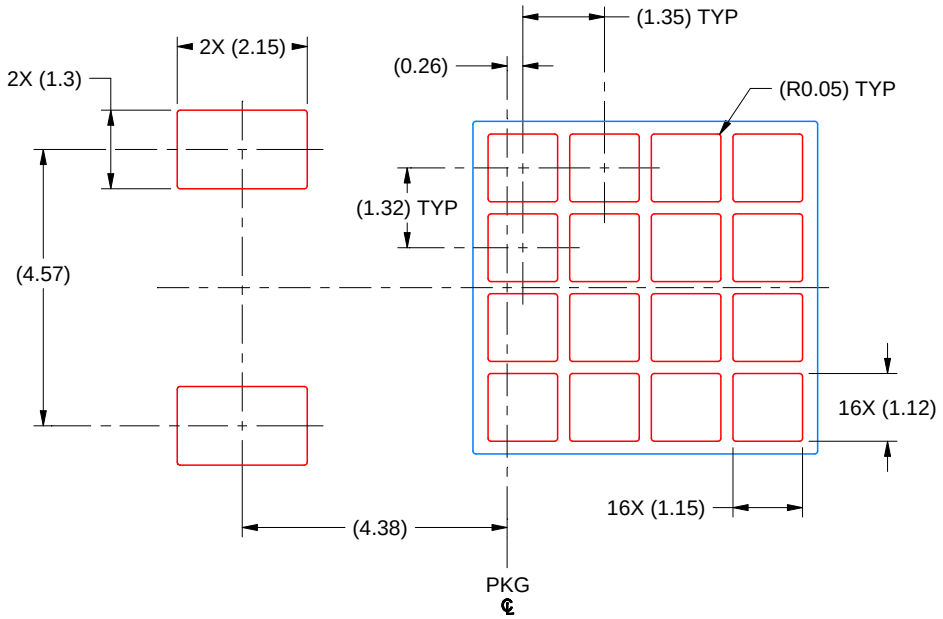

SOLDER PASTE EXAMPLE
BASED ON 0.125 MM THICK STENCIL
SCALE: 8X

4219870/A 03/2018

NOTES: (continued)

6. Laser cutting apertures with trapezoidal walls and rounded corners may offer better paste release. IPC-7525 may have alternate design recommendations.
7. Board assembly site may have different recommendations for stencil design.

NGG0006A

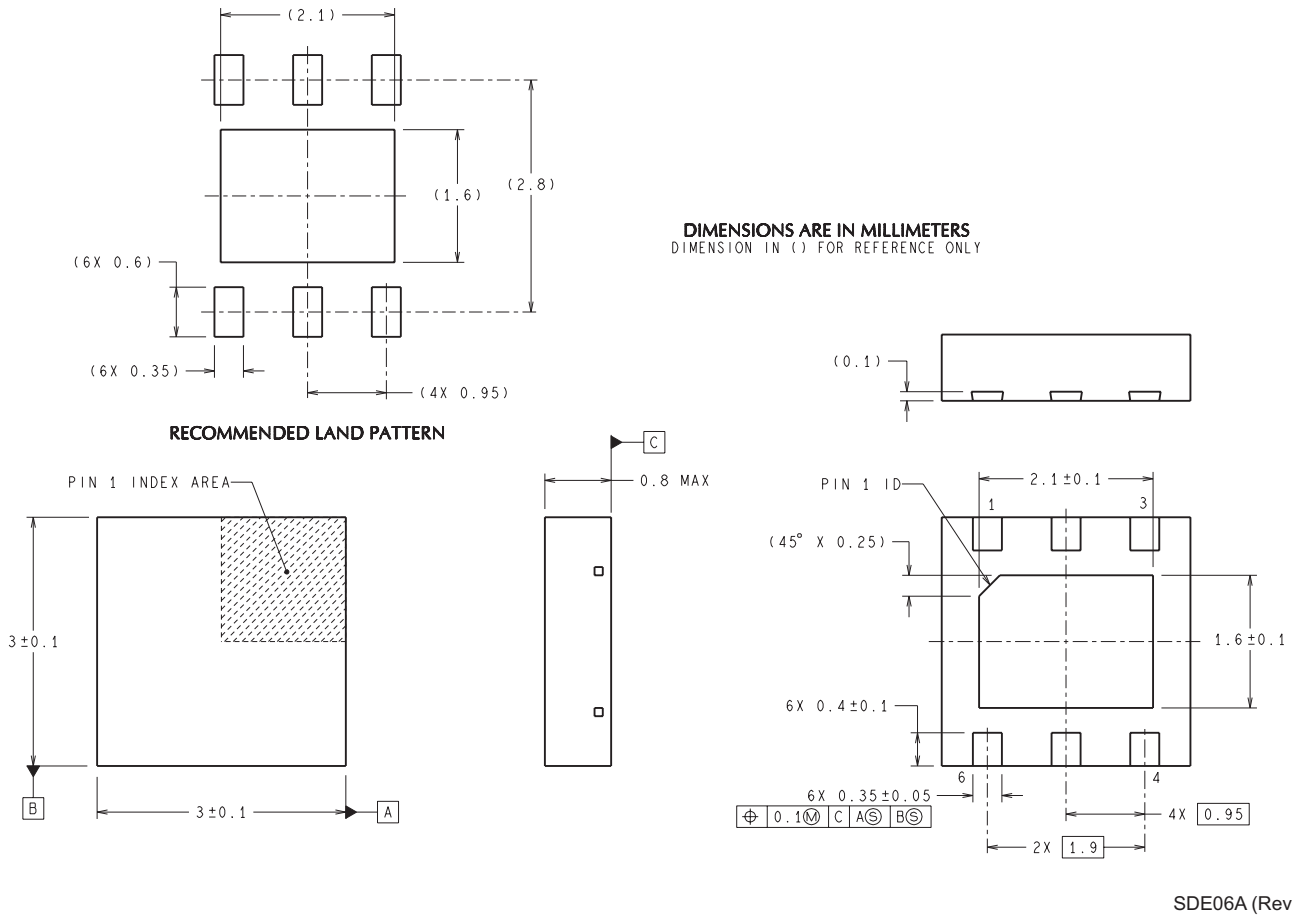
(2.1)
(1.6)
(2.8)
(6X 0.6)
(6X 0.35)
(4X 0.95)
RECOMMENDED LAND PATTERN
DIMENSIONS ARE IN MILLIMETERS
DIMENSION IN () FOR REFERENCE ONLY
(0.1)
PIN 1 INDEX AREA
C
0.8 MAX
3±0.1
B
3±0.1
A
PIN 1 ID
2.1±0.1
1
3
(45° X 0.25)
1.6±0.1
6X 0.4±0.1
6
4
6X 0.35±0.05
0.1 M C A S B S
4X 0.95
2X 1.9
SDE06A (Rev A)

重要声明和免责声明

TI“按原样”提供技术和可靠性数据（包括数据表）、设计资源（包括参考设计）、应用或其他设计建议、网络工具、安全信息和其他资源，不保证没有瑕疵且不做出任何明示或暗示的担保，包括但不限于对适销性、某特定用途方面的适用性或不侵犯任何第三方知识产权的暗示担保。

这些资源可供使用 TI 产品进行设计的熟练开发人员使用。您将自行承担以下全部责任：(1) 针对您的应用选择合适的 TI 产品，(2) 设计、验证并测试您的应用，(3) 确保您的应用满足相应标准以及任何其他功能安全、信息安全、监管或其他要求。

这些资源如有变更，恕不另行通知。TI 授权您仅可将这些资源用于研发本资源所述的 TI 产品的应用。严禁对这些资源进行其他复制或展示。您无权使用任何其他 TI 知识产权或任何第三方知识产权。您应全额赔偿因在这些资源的使用中对 TI 及其代表造成的任何索赔、损害、成本、损失和债务，TI 对此概不负责。

TI 提供的产品受 TI 的销售条款或 ti.com 上其他适用条款/TI 产品随附的其他适用条款的约束。TI 提供这些资源并不会扩展或以其他方式更改 TI 针对 TI 产品发布的适用的担保或担保免责声明。

TI 反对并拒绝您可能提出的任何其他或不同的条款。

邮寄地址：Texas Instruments, Post Office Box 655303, Dallas, Texas 75265
Copyright © 2022，德州仪器 (TI) 公司