PRECISION MICROPOWER SHUNT VOLTAGE REFERENCE

FEATURES

- **Fixed Output Voltages of 2.5 V, 4.096 V, 5 V, and 10 V**
- **Tight Output Tolerances and Low Temperature Coefficient**
  - **Max 0.1%, 50 ppm/°C – A Grade**
  - **Max 0.2%, 50 ppm/°C – B Grade**
  - **Max 0.5%, 50 ppm/°C – C Grade**
- **Low Output Noise: 41 μV_{RMS} Typ**
- **Wide Operating Current Range: 60 μA Typ to 15 mA**
- **Stable With All Capacitive Loads; No Output Capacitor Required**
- **Available in Extended Temperature Range: –40°C to 125°C**

APPLICATIONS

- **Data-Acquisition Systems**
- **Power Supplies and Power-Supply Monitors**
- **Instrumentation and Test Equipment**
- **Process Controls**
- **Precision Audio**
- **Automotive Electronics**
- **Energy Management**
- **Battery-Powered Equipment**

DBZ (SOT-23-3) PACKAGE (TOP VIEW)

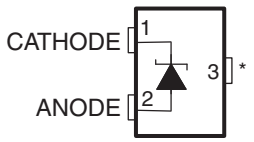

*Pin 3 is attached to Substrate and must be connected to ANODE or left open.

DCK (SC-70) PACKAGE (TOP VIEW)

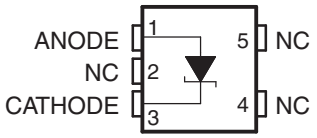

NC – No internal connection

DESCRIPTION/ORDERING INFORMATION

The TL4050 series of shunt voltage references are versatile easy-to-use references suitable for a wide array of applications. The two-terminal fixed-output device requires no external capacitors for operation and is stable with all capacitive loads. Additionally, the reference offers low dynamic impedance, low noise, and low temperature coefficient to ensure a stable output voltage over a wide range of operating currents and temperatures.

The TL4050 is offered in three initial tolerances, ranging from 0.1% (max) for the A grade to 0.5% (max) for the C grade. Thus, a great deal of flexibility is offered to designers in choosing the best cost-to-performance ratio for their applications. Packaged in the space-saving SOT-23-3 and SC-70 packages and requiring a minimum current of 45 μA (typ), the TL4050 also is ideal for portable applications.

The TL4050xI is characterized for operation over an ambient temperature range of –40°C to 85°C. The TL4050xQ is characterized for operation over an ambient temperature range of –40°C to 125°C.

Please be aware that an important notice concerning availability, standard warranty, and use in critical applications of Texas Instruments semiconductor products and disclaimers thereto appears at the end of this data sheet.

PRODUCTION DATA information is current as of publication date. Products conform to specifications per the terms of the Texas Instruments standard warranty. Production processing does not necessarily include testing of all parameters.

Copyright © 2007–2009, Texas Instruments Incorporated

ORDERING INFORMATION(1)

T_A	DEVICE GRADE	V_{KA}	PACKAGE(2)		ORDERABLE PART NUMBER	TOP-SIDE MARKING(3)
–40°C to 85°C	A grade: 0.1% initial accuracy and 50 ppm/°C temperature coefficient	2.5 V	SOT-23-3 – DBZ	Reel of 3000	TL4050A25IDBZR	TKE_
				Reel of 250	TL4050A25IDBZT	
			SC-70 – DCK	Reel of 3000	TL4050A25IDCKR	82_
				Reel of 250	TL4050A25IDCKT	
		4.096 V	SOT-23-3 – DBZ	Reel of 3000	TL4050A41IDBZR	TKL_
				Reel of 250	TL4050A41IDBZT	
			SC-70 – DCK	Reel of 3000	TL4050A41IDCKR	8E_
				Reel of 250	TL4050A41IDCKT	
		5 V	SOT-23-3 – DBZ	Reel of 3000	TL4050A50IDBZR	TKS_
				Reel of 250	TL4050A50IDBZT	
			SC-70 – DCK	Reel of 3000	TL4050A50IDCKR	8L_
				Reel of 250	TL4050A50IDCKT	
		10 V	SOT-23-3 – DBZ	Reel of 3000	TL4050A10IDBZR	TK2_
				Reel of 250	TL4050A10IDBZT	
			SC-70 – DCK	Reel of 3000	TL4050A10IDCKR	8Z_
				Reel of 250	TL4050A10IDCKT	
	B grade: 0.2% initial accuracy and 50 ppm/°C temperature coefficient	2.5 V	SOT-23-3 – DBZ	Reel of 3000	TL4050B25IDBZR	TKF_
				Reel of 250	TL4050B25IDBZT	
			SC-70 – DCK	Reel of 3000	TL4050B25IDCKR	83_
				Reel of 250	TL4050B25IDCKT	
		4.096 V	SOT-23-3 – DBZ	Reel of 3000	TL4050B41IDBZR	TKM_
				Reel of 250	TL4050B41IDBZT	
			SC-70 – DCK	Reel of 3000	TL4050B41IDCKR	8F_
				Reel of 250	TL4050B41IDCKT	
		5 V	SOT-23-3 – DBZ	Reel of 3000	TL4050B50IDBZR	TKT_
				Reel of 250	TL4050B50IDBZT	
			SC-70 – DCK	Reel of 3000	TL4050B50IDCKR	8M_
				Reel of 250	TL4050B50IDCKT	
		10 V	SOT-23-3 – DBZ	Reel of 3000	TL4050B10IDBZR	TK3_
				Reel of 250	TL4050B10IDBZT	
			SC-70 – DCK	Reel of 3000	TL4050B10IDCKR	92_
				Reel of 250	TL4050B10IDCKT	

(1) For the most current package and ordering information, see the Package Option Addendum at the end of this document, or see the TI web site at www.ti.com.
(2) Package drawings, thermal data, and symbolization are available at www.ti.com/packaging.
(3) The actual top-side marking has one additional character that designates the wafer fab/assembly site.

Copyright © 2007–2009, Texas Instruments Incorporated

ORDERING INFORMATION (continued)

T_A	DEVICE GRADE	V_{KA}	PACKAGE(2)		ORDERABLE PART NUMBER	TOP-SIDE MARKING(3)
–40°C to 85°C	C grade: 0.5% initial accuracy and 50 ppm/°C temperature coefficient	2.5 V	SOT-23-3 – DBZ	Reel of 3000	TL4050C25IDBZR	TKG_
				Reel of 250	TL4050C25IDBZT	
			SC-70 – DCK	Reel of 3000	TL4050C25IDCKR	84_
				Reel of 250	TL4050C25IDCKT	
		4.096 V	SOT-23-3 – DBZ	Reel of 3000	TL4050C41IDBZR	TKN_
				Reel of 250	TL4050C41IDBZT	
			SC-70 – DCK	Reel of 3000	TL4050C41IDCKR	8G_
				Reel of 250	TL4050C41IDCKT	
		5 V	SOT-23-3 – DBZ	Reel of 3000	TL4050C50IDBZR	TKU_
				Reel of 250	TL4050C50IDBZT	
			SC-70 – DCK	Reel of 3000	TL4050C50IDCKR	8N_
				Reel of 250	TL4050C50IDCKT	
		10 V	SOT-23-3 – DBZ	Reel of 3000	TL4050C10IDBZR	TK4_
				Reel of 250	TL4050C10IDBZT	
			SC-70 – DCK	Reel of 3000	TL4050C10IDCKR	93_
				Reel of 250	TL4050C10IDCKT	
–40°C to 125°C	A grade: 0.1% initial accuracy and 50 ppm/°C temperature coefficient	2.5 V	SOT-23-3 – DBZ	Reel of 3000	TL4050A25QDBZR	TKH_
				Reel of 250	TL4050A25QDBZT	
			SC-70 – DCK	Reel of 3000	TL4050A25QDCKR	85_
				Reel of 250	TL4050A25QDCKT	
		4.096 V	SOT-23-3 – DBZ	Reel of 3000	TL4050A41QDBZR	TKP_
				Reel of 250	TL4050A41QDBZT	
			SC-70 – DCK	Reel of 3000	TL4050A41QDCKR	8H_
				Reel of 250	TL4050A41QDCKT	
		5 V	SOT-23-3 – DBZ	Reel of 3000	TL4050A50QDBZR	TKV_
				Reel of 250	TL4050A50QDBZT	
			SC-70 – DCK	Reel of 3000	TL4050A50QDCKR	8P_
				Reel of 250	TL4050A50QDCKT	
		10 V	SOT-23-3 – DBZ	Reel of 3000	TL4050A10QDBZR	TK5_
				Reel of 250	TL4050A10QDBZT	
			SC-70 – DCK	Reel of 3000	TL4050A10QDCKR	94_
				Reel of 250	TL4050A10QDCKT	

Copyright © 2007–2009, Texas Instruments Incorporated

ORDERING INFORMATION (continued)

T_A	DEVICE GRADE	V_{KA}	PACKAGE(2)		ORDERABLE PART NUMBER	TOP-SIDE MARKING(3)
–40°C to 125°C	B grade: 0.2% initial accuracy and 50 ppm/°C temperature coefficient	2.5 V	SOT-23-3 – DBZ	Reel of 3000	TL4050B25QDBZR	TKJ_
				Reel of 250	TL4050B25QDBZT	
			SC-70 – DCK	Reel of 3000	TL4050B25QDCKR	86_
				Reel of 250	TL4050B25QDCKT	
		4.096 V	SOT-23-3 – DBZ	Reel of 3000	TL4050B41QDBZR	TKQ_
				Reel of 250	TL4050B41QDBZT	
			SC-70 – DCK	Reel of 3000	TL4050B41QDCKR	8J_
				Reel of 250	TL4050B41QDCKT	
		5 V	SOT-23-3 – DBZ	Reel of 3000	TL4050B50QDBZR	TKW_
				Reel of 250	TL4050B50QDBZT	
			SC-70 – DCK	Reel of 3000	TL4050B50QDCKR	8R_
				Reel of 250	TL4050B50QDCKT	
		10 V	SOT-23-3 – DBZ	Reel of 3000	TL4050B10QDBZR	TK6_
				Reel of 250	TL4050B10QDBZT	
			SC-70 – DCK	Reel of 3000	TL4050B10QDCKR	95_
				Reel of 250	TL4050B10QDCKT	
	C grade: 0.5% initial accuracy and 50 ppm/°C temperature coefficient	2.5 V	SOT-23-3 – DBZ	Reel of 3000	TL4050C25QDBZR	TKK_
				Reel of 250	TL4050C25QDBZT	
			SC-70 – DCK	Reel of 3000	TL4050C25QDCKR	87_
				Reel of 250	TL4050C25QDCKT	
		4.096 V	SOT-23-3 – DBZ	Reel of 3000	TL4050C41QDBZR	TKR_
				Reel of 250	TL4050C41QDBZT	
			SC-70 – DCK	Reel of 3000	TL4050C41QDCKR	8K_
				Reel of 250	TL4050C41QDCKT	
		5 V	SOT-23-3 – DBZ	Reel of 3000	TL4050C50QDBZR	TKY_
				Reel of 250	TL4050C50QDBZT	
			SC-70 – DCK	Reel of 3000	TL4050C50QDCKR	8S_
				Reel of 250	TL4050C50QDCKT	
		10 V	SOT-23-3 – DBZ	Reel of 3000	TL4050C10QDBZR	TK7_
				Reel of 250	TL4050C10QDBZT	
			SC-70 – DCK	Reel of 3000	TL4050C10QDCKR	96_
				Reel of 250	TL4050C10QDCKT	

Copyright © 2007–2009, Texas Instruments Incorporated

FUNCTIONAL BLOCK DIAGRAM

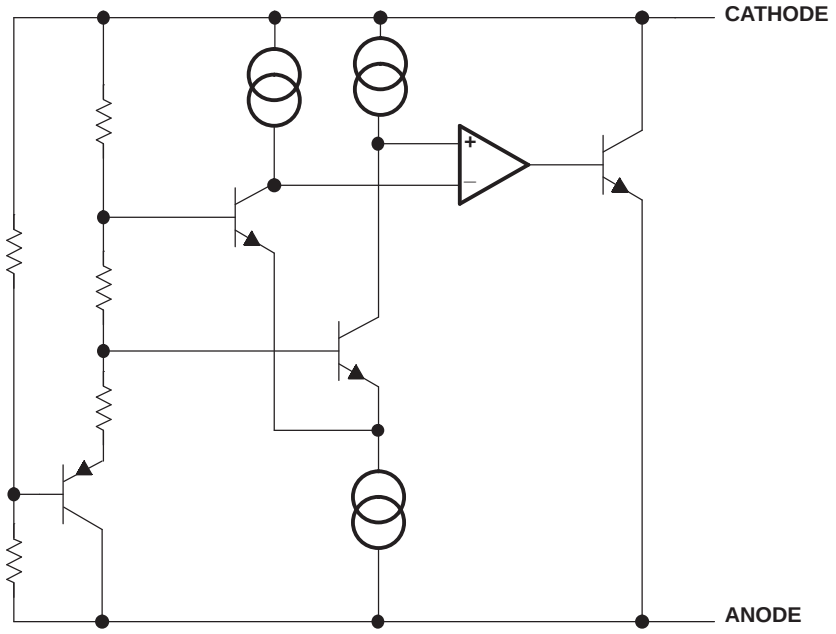

ABSOLUTE MAXIMUM RATINGS[(1)]

over free-air temperature range (unless otherwise noted)

			MIN	MAX	UNIT
I_Z	Continuous cathode current		–10	20	mA
θ_{JA}	Package thermal impedance[(2)(3)]	DBV package		206	°C/W
		DCK package		252	
T_J	Operating virtual junction temperature			150	°C
T_{stg}	Storage temperature range		–65	150	°C

(1) Stresses beyond those listed under *Absolute Maximum Ratings* may cause permanent damage to the device. These are stress ratings only, and functional operation of the device at these or any other conditions beyond those indicated under *Recommended Operating Conditions* is not implied. Exposure to absolute-maximum-rated conditions for extended periods may affect device reliability.
(2) Maximum power dissipation is a function of $T_J(max)$, θ_{JA}, and T_A. The maximum allowable power dissipation at any allowable ambient temperature is $P_D = (T_J(max) – T_A)/\theta_{JA}$. Operating at the absolute maximum T_J of 150°C can affect reliability.
(3) The package thermal impedance is calculated in accordance with JESD 51-7.

RECOMMENDED OPERATING CONDITIONS

			MIN	MAX	UNIT
I_Z	Cathode current		[(1)]	15	mA
T_A	Free-air temperature	I temperature	–40	85	°C
		Q temperature	–40	125	

(1) See parametric tables

TL4050x25I ELECTRICAL CHARACTERISTICS

at industrial temperature range, full range T_A = –40°C to 85°C (unless otherwise noted)

PARAMETER		TEST CONDITIONS	T_A	TL4050A25I			TL4050B25I			TL4050C25I			UNIT
				MIN	TYP	MAX	MIN	TYP	MAX	MIN	TYP	MAX	
V_Z	Reverse breakdown voltage	I_Z = 100 µA	25°C		2.5			2.5			2.5		V
ΔV_Z	Reverse breakdown voltage tolerance	I_Z = 100 µA	25°C	–2.5		2.5	–5		5	–13		13	mV
			Full range	–11		11	–14		14	–21		21	
$I_{Z,min}$	Minimum cathode current		25°C		41	60		41	60		41	60	µA
			Full range			65			65			65	
α_{VZ}	Average temperature coefficient of reverse breakdown voltage	I_Z = 10 mA	25°C		±20			±20			±20		ppm/°C
		I_Z = 1 mA	25°C		±15			±15			±15		
		I_Z = 100 µA	25°C		±15			±15			±15		
			Full range			±50			±50			±50	
$\frac{\Delta V_Z}{\Delta I_Z}$	Reverse breakdown voltage change with cathode current change	$I_{Z,min} < I_Z < 1$ mA	25°C		0.3	0.8		0.3	0.8		0.3	0.8	mV
			Full range			1.2			1.2			1.2	
		1 mA < I_Z < 15 mA	25°C		2.3	6		2.3	6		2.3	6	
			Full range			8			8			8	
Z_Z	Reverse dynamic impedance	I_Z = 1 mA, f = 120 Hz, I_{AC} = 0.1 I_Z	25°C		0.3			0.3			0.3		Ω
e_N	Wideband noise	I_Z = 100 µA, 10 Hz ≤ f ≤ 10 kHz	25°C		41			41			41		μV_{RMS}
	Long-term stability of reverse breakdown voltage	t = 1000 h, T_A = 25°C ± 0.1°C, I_Z = 100 µA			120			120			120		ppm
V_{HYST}	Thermal hysteresis(1)	ΔT_A = –40°C to 125°C			0.7			0.7			0.7		mV

(1) Thermal hysteresis is defined as $V_{Z,25°C}$ (after cycling to –40°C) – $V_{Z,25°C}$ (after cycling to 125°C).

Copyright © 2007–2009, Texas Instruments Incorporated

TL4050x25Q ELECTRICAL CHARACTERISTICS

at extended temperature range, full range T_A = –40°C to 125°C (unless otherwise noted)

PARAMETER		TEST CONDITIONS	T_A	TL4050A25Q			TL4050B25Q			TL4050C25Q			UNIT
				MIN	TYP	MAX	MIN	TYP	MAX	MIN	TYP	MAX	
V_Z	Reverse breakdown voltage	I_Z = 100 µA	25°C		2.5			2.5			2.5		V
ΔV_Z	Reverse breakdown voltage tolerance	I_Z = 100 µA	25°C	–2.5		2.5	–5		5	–13		13	mV
			Full range	–15		15	–18		18	–25		25	
$I_{Z,min}$	Minimum cathode current		25°C		41	60		41	60		41	60	µA
			Full range			65			65			65	
α_{VZ}	Average temperature coefficient of reverse breakdown voltage	I_Z = 10 mA	25°C		±20			±20			±20		ppm/°C
		I_Z = 1 mA	25°C		±15			±15			±15		
		I_Z = 100 µA	25°C		±15			±15			±15		
			Full range			±50			±50			±50	
$\frac{\Delta V_Z}{\Delta I_Z}$	Reverse breakdown voltage change with cathode current change	$I_{Z,min} < I_Z < 1$ mA	25°C		0.3	0.8		0.3	0.8		0.3	0.8	mV
			Full range			1.2			1.2			1.2	
		1 mA < I_Z < 15 mA	25°C		2.3	6		2.3	6		2.3	6	
			Full range			8			8			8	
Z_Z	Reverse dynamic impedance	I_Z = 1 mA, f = 120 Hz, I_{AC} = 0.1 I_Z	25°C		0.3			0.3			0.3		Ω
e_N	Wideband noise	I_Z = 100 µA, 10 Hz ≤ f ≤ 10 kHz	25°C		41			41			41		μV_{RMS}
	Long-term stability of reverse breakdown voltage	t = 1000 h, T_A = 25°C ± 0.1°C, I_Z = 100 µA			120			120			120		ppm
V_{HYST}	Thermal hysteresis (1)	ΔT_A = –40°C to 125°C			0.7			0.7			0.7		mV

(1) Thermal hysteresis is defined as $V_{Z,25°C}$ (after cycling to –40°C) – $V_{Z,25°C}$ (after cycling to 125°C).

TL4050x41I ELECTRICAL CHARACTERISTICS

at industrial temperature range, full range T_A = –40°C to 85°C (unless otherwise noted)

PARAMETER		TEST CONDITIONS	T_A	TL4050A41I			TL4050B41I			TL4050C41I			UNIT
				MIN	TYP	MAX	MIN	TYP	MAX	MIN	TYP	MAX	
V_Z	Reverse breakdown voltage	I_Z = 100 µA	25°C		4.096			4.096			4.096		V
ΔV_Z	Reverse breakdown voltage tolerance	I_Z = 100 µA	25°C	–4.1		4.1	–8.2		8.2	–21		21	mV
			Full range	–18		18	–22		22	–34		34	
$I_{Z,min}$	Minimum cathode current		25°C		52	68		52	68		52	68	µA
			Full range			73			73			73	
α_{VZ}	Average temperature coefficient of reverse breakdown voltage	I_Z = 10 mA	25°C		±30			±30			±30		ppm/°C
		I_Z = 1 mA	25°C		±20			±20			±20		
		I_Z = 100 µA	25°C		±20			±20			±20		
			Full range			±50			±50			±50	
$\frac{\Delta V_Z}{\Delta I_Z}$	Reverse breakdown voltage change with cathode current change	$I_{Z,min} < I_Z < 1$ mA	25°C		0.2	0.9		0.2	0.9		0.2	0.9	mV
			Full range			1.2			1.2			1.2	
		1 mA < I_Z < 15 mA	25°C		2	7		2	7		2	7	
			Full range			10			10			10	
Z_Z	Reverse dynamic impedance	I_Z = 1 mA, f = 120 Hz, I_{AC} = 0.1 I_Z	25°C		0.5			0.5			0.5		Ω
e_N	Wideband noise	I_Z = 100 µA, 10 Hz ≤ f ≤ 10 kHz	25°C		93			93			93		μV_{RMS}
	Long-term stability of reverse breakdown voltage	t = 1000 h, T_A = 25°C ± 0.1°C, I_Z = 100 µA			120			120			120		ppm
V_{HYST}	Thermal hysteresis(1)	ΔT_A = –40°C to 125°C			1.148			1.148			1.148		mV

(1) Thermal hysteresis is defined as $V_{Z,25°C}$ (after cycling to –40°C) – $V_{Z,25°C}$ (after cycling to 125°C).

Copyright © 2007–2009, Texas Instruments Incorporated

TL4050x41Q ELECTRICAL CHARACTERISTICS

at extended temperature range, full range T_A = –40°C to 125°C (unless otherwise noted)

PARAMETER		TEST CONDITIONS	T_A	TL4050A41Q			TL4050B41Q			TL4050C41Q			UNIT
				MIN	TYP	MAX	MIN	TYP	MAX	MIN	TYP	MAX	
V_Z	Reverse breakdown voltage	I_Z = 100 µA	25°C		4.096			4.096			4.096		V
ΔV_Z	Reverse breakdown voltage tolerance	I_Z = 100 µA	25°C	–4.1		4.1	–8.2		8.2	–21		21	mV
			Full range	–25		25	–29		29	–41		41	
$I_{Z,min}$	Minimum cathode current		25°C		52	68		52	68		52	68	µA
			Full range			78			78			78	
α_{VZ}	Average temperature coefficient of reverse breakdown voltage	I_Z = 10 mA	25°C		±30			±30			±30		ppm/°C
		I_Z = 1 mA	25°C		±20			±20			±20		
		I_Z = 100 µA	25°C		±20			±20			±20		
			Full range			±50			±50			±50	
$\frac{\Delta V_Z}{\Delta I_Z}$	Reverse breakdown voltage change with cathode current change	$I_{Z,min} < I_Z < 1$ mA	25°C		0.2	0.9		0.2	0.9		0.2	0.9	mV
			Full range			1.2			1.2			1.2	
		1 mA < I_Z < 15 mA	25°C		2	7		2	7		2	7	
			Full range			10			10			10	
Z_Z	Reverse dynamic impedance	I_Z = 1 mA, f = 120 Hz, I_{AC} = 0.1 I_Z	25°C		0.5			0.5			0.5		Ω
e_N	Wideband noise	I_Z = 100 µA, 10 Hz ≤ f ≤ 10 kHz	25°C		93			93			93		μV_{RMS}
	Long-term stability of reverse breakdown voltage	t = 1000 h, T_A = 25°C ± 0.1°C, I_Z = 100 µA			120			120			120		ppm
V_{HYST}	Thermal hysteresis(1)	ΔT_A = –40°C to 125°C			1.148			1.148			1.148		mV

(1) Thermal hysteresis is defined as $V_{Z,25°C}$ (after cycling to –40°C) – $V_{Z,25°C}$ (after cycling to 125°C).

TL4050x50I ELECTRICAL CHARACTERISTICS

at industrial temperature range, full range T_A = –40°C to 85°C (unless otherwise noted)

PARAMETER		TEST CONDITIONS	T_A	TL4050A50I			TL4050B50I			TL4050C50I			UNIT
				MIN	TYP	MAX	MIN	TYP	MAX	MIN	TYP	MAX	
V_Z	Reverse breakdown voltage	I_Z = 100 µA	25°C		5			5			5		V
ΔV_Z	Reverse breakdown voltage tolerance	I_Z = 100 µA	25°C	–5		5	–10		10	–25		25	mV
			Full range	–22		22	–27		27	–42		42	
$I_{Z,min}$	Minimum cathode current		25°C		56	74		56	74		56	74	µA
			Full range			80			80			80	
α_{VZ}	Average temperature coefficient of reverse breakdown voltage	I_Z = 10 mA	25°C		±30			±30			±30		ppm/°C
		I_Z = 1 mA	25°C		±20			±20			±20		
		I_Z = 100 µA	25°C		±20			±20			±20		
			Full range			±50			±50			±50	
$\frac{\Delta V_Z}{\Delta I_Z}$	Reverse breakdown voltage change with cathode current change	$I_{Z,min} < I_Z < 1$ mA	25°C		0.2	1		0.2	1		0.2	1	mV
			Full range			1.4			1.4			1.4	
		1 mA < I_Z < 15 mA	25°C		2	8		2	8		2	8	
			Full range			12			12			12	
Z_Z	Reverse dynamic impedance	I_Z = 1 mA, f = 120 Hz, I_{AC} = 0.1 I_Z	25°C		0.5			0.5			0.5		Ω
e_N	Wideband noise	I_Z = 100 µA, 10 Hz ≤ f ≤ 10 kHz	25°C		93			93			93		μV_{RMS}
	Long-term stability of reverse breakdown voltage	t = 1000 h, T_A = 25°C ± 0.1°C, I_Z = 100 µA			120			120			120		ppm
V_{HYST}	Thermal hysteresis(1)	ΔT_A = –40°C to 125°C			1.4			1.4			1.4		mV

(1) Thermal hysteresis is defined as $V_{Z,25°C}$ (after cycling to –40°C) – $V_{Z,25°C}$ (after cycling to 125°C).

Copyright © 2007–2009, Texas Instruments Incorporated

TL4050x50Q ELECTRICAL CHARACTERISTICS

at extended temperature range, full range T_A = –40°C to 125°C (unless otherwise noted)

PARAMETER		TEST CONDITIONS	T_A	TL4050A50Q			TL4050B50Q			TL4050C50Q			UNIT
				MIN	TYP	MAX	MIN	TYP	MAX	MIN	TYP	MAX	
V_Z	Reverse breakdown voltage	I_Z = 100 µA	25°C		5			5			5		V
ΔV_Z	Reverse breakdown voltage tolerance	I_Z = 100 µA	25°C	–5		5	–10		10	–25		25	mV
			Full range	–30		30	–35		35	–50		50	
$I_{Z,min}$	Minimum cathode current		25°C		56	74		56	74		56	74	µA
			Full range			90			90			90	
α_{VZ}	Average temperature coefficient of reverse breakdown voltage	I_Z = 10 mA	25°C		±30			±30			±30		ppm/°C
		I_Z = 1 mA	25°C		±20			±20			±20		
		I_Z = 100 µA	25°C		±20			±20			±20		
			Full range			±50			±50			±50	
$\frac{\Delta V_Z}{\Delta I_Z}$	Reverse breakdown voltage change with cathode current change	$I_{Z,min} < I_Z < 1$ mA	25°C		0.2	1		0.2	1		0.2	1	mV
			Full range			1.4			1.4			1.4	
		1 mA < I_Z < 15 mA	25°C		2	8		2	8		2	8	
			Full range			12			12			12	
Z_Z	Reverse dynamic impedance	I_Z = 1 mA, f = 120 Hz, I_{AC} = 0.1 I_Z	25°C		0.5			0.5			0.5		Ω
e_N	Wideband noise	I_Z = 100 µA, 10 Hz ≤ f ≤ 10 kHz	25°C		93			93			93		μV_{RMS}
	Long-term stability of reverse breakdown voltage	t = 1000 h, T_A = 25°C ± 0.1°C, I_Z = 100 µA			120			120			120		ppm
V_{HYST}	Thermal hysteresis(1)	ΔT_A = –40°C to 125°C			1.4			1.4			1.4		mV

(1) Thermal hysteresis is defined as $V_{Z,25°C}$ (after cycling to –40°C) – $V_{Z,25°C}$ (after cycling to 125°C).

TL4050x10I ELECTRICAL CHARACTERISTICS

at industrial temperature range, full range T_A = –40°C to 85°C (unless otherwise noted)

PARAMETER		TEST CONDITIONS	T_A	TL4050A10I			TL4050B10I			TL4050C10I			UNIT
				MIN	TYP	MAX	MIN	TYP	MAX	MIN	TYP	MAX	
V_Z	Reverse breakdown voltage	I_Z = 100 µA	25°C		10			10			10		V
ΔV_Z	Reverse breakdown voltage tolerance	I_Z = 100 µA	25°C	–10		10	–20		20	–50		50	mV
			Full range	–43		43	–53		53	–83		83	
$I_{Z,min}$	Minimum cathode current		25°C		80	100		80	100		80	100	µA
			Full range			103			103			103	
α_{VZ}	Average temperature coefficient of reverse breakdown voltage	I_Z = 10 mA	25°C		±40			±40			±40		ppm/°C
		I_Z = 1 mA	25°C		±20			±20			±20		
		I_Z = 100 µA	25°C		±20			±20			±20		
			Full range			±50			±50			±50	
$\frac{\Delta V_Z}{\Delta I_Z}$	Reverse breakdown voltage change with cathode current change	$I_{Z,min} < I_Z < 1$ mA	25°C		0.8	1.5		0.8	1.5		0.8	1.5	mV
			Full range			3.5			3.5			3.5	
		1 mA < I_Z < 15 mA	25°C		8	12		8	12		8	12	
			Full range			23			23			23	
Z_Z	Reverse dynamic impedance	I_Z = 1 mA, f = 120 Hz, I_{AC} = 0.1 I_Z	25°C		0.7			0.7			0.7		Ω
e_N	Wideband noise	I_Z = 100 µA, 10 Hz ≤ f ≤ 10 kHz	25°C		150			150			150		μV_{RMS}
	Long-term stability of reverse breakdown voltage	t = 1000 h, T_A = 25°C ± 0.1°C, I_Z = 100 µA			120			120			120		ppm
V_{HYST}	Thermal hysteresis(1)	ΔT_A = –40°C to 125°C			2.8			2.8			2.8		mV

(1) Thermal hysteresis is defined as $V_{Z,25°C}$ (after cycling to –40°C) – $V_{Z,25°C}$ (after cycling to 125°C).

Copyright © 2007–2009, Texas Instruments Incorporated

TL4050x10Q ELECTRICAL CHARACTERISTICS

at extended temperature range, full range T_A = –40°C to 125°C (unless otherwise noted)

PARAMETER		TEST CONDITIONS	T_A	TL4050A10Q			TL4050B10Q			TL4050C10Q			UNIT
				MIN	TYP	MAX	MIN	TYP	MAX	MIN	TYP	MAX	
V_Z	Reverse breakdown voltage	I_Z = 100 µA	25°C		10			10			10		V
ΔV_Z	Reverse breakdown voltage tolerance	I_Z = 100 µA	25°C	–10		10	–20		20	–50		50	mV
			Full range	–60		60	–70		70	–100		100	
$I_{Z,min}$	Minimum cathode current		25°C		80	100		80	100		80	100	µA
			Full range			110			110			110	
α_{VZ}	Average temperature coefficient of reverse breakdown voltage	I_Z = 10 mA	25°C		±40			±40			±40		ppm/°C
		I_Z = 1 mA	25°C		±20			±20			±20		
		I_Z = 100 µA	25°C		±20			±20			±20		
			Full range			±50			±50			±50	
$\frac{\Delta V_Z}{\Delta I_Z}$	Reverse breakdown voltage change with cathode current change	$I_{Z,min} < I_Z < 1$ mA	25°C		0.8	1.5		0.8	1.5		0.8	1.5	mV
			Full range			3.5			3.5			3.5	
		1 mA < I_Z < 15 mA	25°C		8	12		8	12		8	12	
			Full range			23			23			23	
Z_Z	Reverse dynamic impedance	I_Z = 1 mA, f = 120 Hz, I_{AC} = 0.1 I_Z	25°C		0.7			0.7			0.7		Ω
e_N	Wideband noise	I_Z = 100 µA, 10 Hz ≤ f ≤ 10 kHz	25°C		150			150			150		μV_{RMS}
	Long-term stability of reverse breakdown voltage	t = 1000 h, T_A = 25°C ± 0.1°C, I_Z = 100 µA			120			120			120		ppm
V_{HYST}	Thermal hysteresis(1)	ΔT_A = –40°C to 125°C			2.8			2.8			2.8		mV

(1) Thermal hysteresis is defined as $V_{Z,25°C}$ (after cycling to –40°C) – $V_{Z,25°C}$ (after cycling to 125°C).

Copyright © 2007–2009, Texas Instruments Incorporated

TYPICAL CHARACTERISTICS

OUTPUT IMPEDANCE vs FREQUENCY

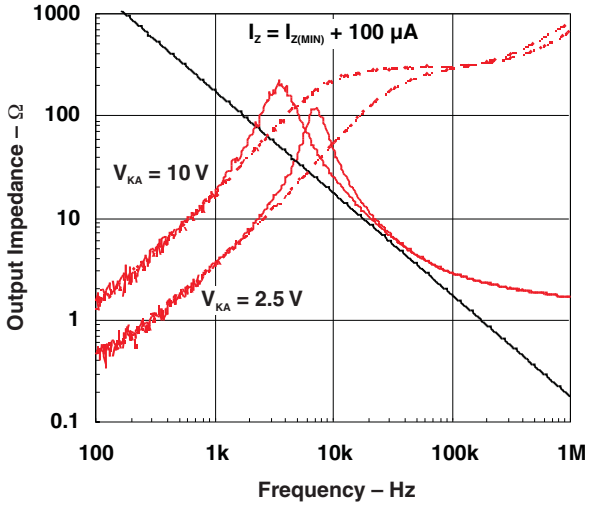

OUTPUT IMPEDANCE vs FREQUENCY

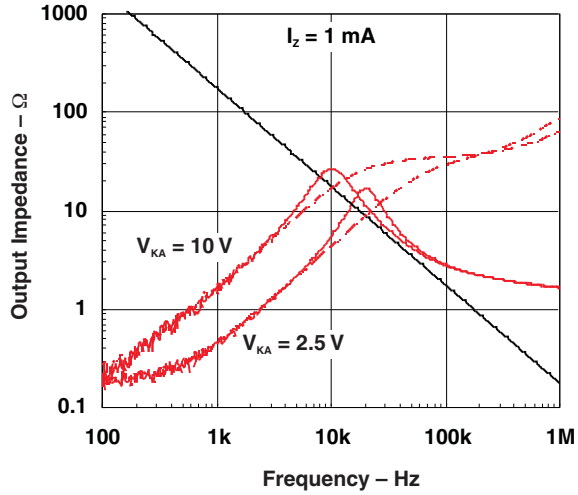

REVERSE CHARACTERISTICS AND MINIMUM OPERATING CURRENT

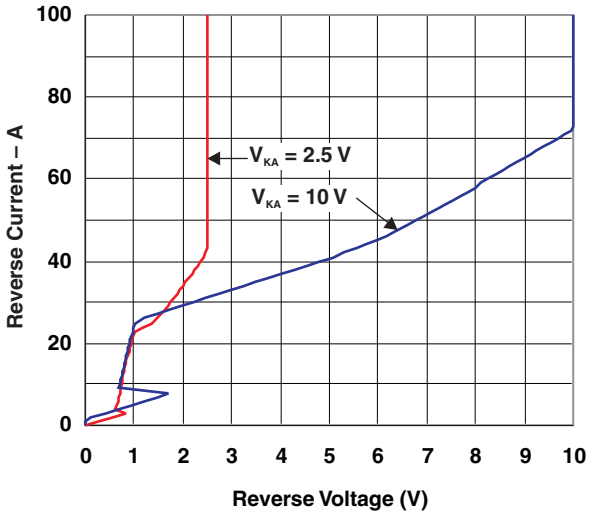

NOISE VOLTAGE vs FREQUENCY

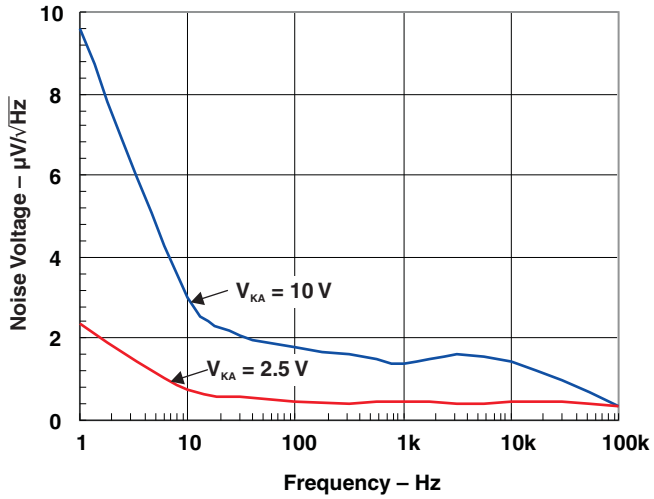

Copyright © 2007–2009, Texas Instruments Incorporated

TYPICAL CHARACTERISTICS (continued)

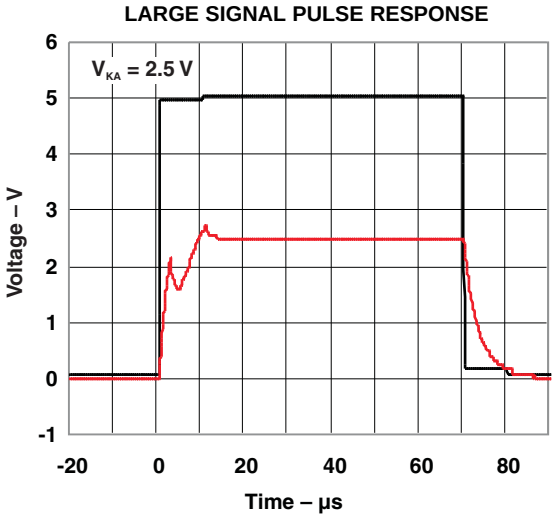

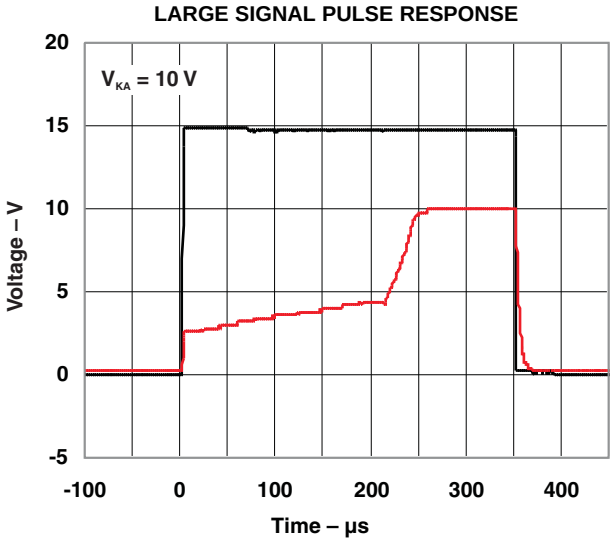

APPLICATION INFORMATION

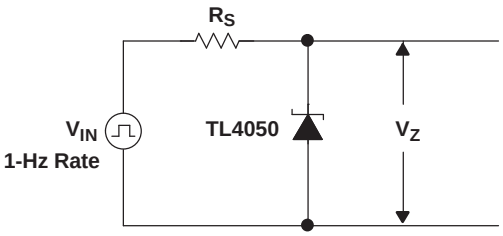

Figure 1. Start-Up Test Circuit

Output Capacitor

The TL4050 does not require an output capacitor across cathode and anode for stability. However, if an output bypass capacitor is desired, the TL4050 is designed to be stable with all capacitive loads.

SOT-23 Pin Connections

There is a parasitic Schottky diode connected between pins 2 and 3 of the SOT-23 packaged device. Thus, pin 3 of the SOT-23 package must be left floating or connected to pin 2.

Use With ADCs or DACs

The TL4050x-41 is designed to be a cost-effective voltage reference as required in 12-bit data-acquisition systems. For 12-bit systems operating from 5-V supplies, such as the ADS7842 (see Figure 2), the TL4050x-41 (4.096 V) permits operation with an LSB of 1 mV.

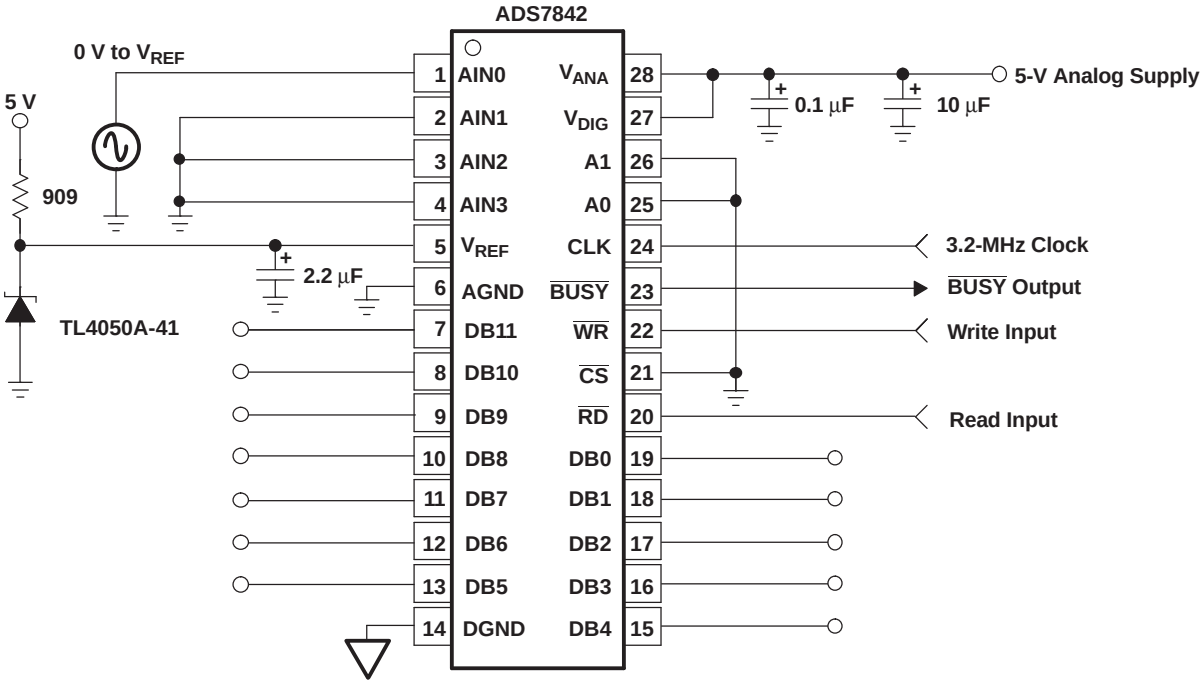

Figure 2. Data-Acquisition Circuit With TL4050x-41

Copyright © 2007–2009, Texas Instruments Incorporated

Cathode and Load Currents

In a typical shunt-regulator configuration (see Figure 3), an external resistor, R_S, is connected between the supply and the cathode of the TL4050. R_S must be set properly, as it sets the total current available to supply the load (I_L) and bias the TL4050 (I_Z). In all cases, I_Z must stay within a specified range for proper operation of the reference. Taking into consideration one extreme in the variation of the load and supply voltage (maximum I_L and minimum V_S), R_S must be small enough to supply the minimum I_Z required for operation of the regulator, as given by data-sheet parameters. At the other extreme, maximum V_S and minimum I_L, R_S must be large enough to limit I_Z to less than its maximum-rated value of 15 mA.

R_S is calculated according to Equation 1:

$$R_S = \frac{(V_S - V_Z)}{(I_L + I_Z)} \tag{1}$$

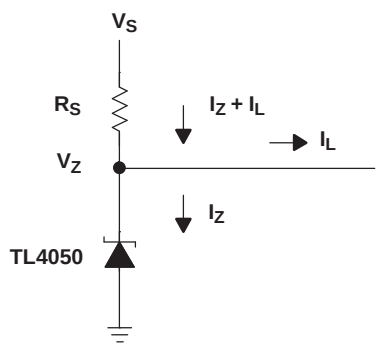

Figure 3. Shunt Regulator

PACKAGING INFORMATION

Orderable Device	Status (1)	Package Type	Package Drawing	Pins	Package Qty	Eco Plan (2)	Lead finish/ Ball material (6)	MSL Peak Temp (3)	Op Temp (°C)	Device Marking (4/5)	Samples
TL4050A10IDBZR	ACTIVE	SOT-23	DBZ	3	3000	RoHS & Green	NIPDAU	Level-1-260C-UNLIM	-40 to 85	TK2U	Samples
TL4050A10IDBZT	ACTIVE	SOT-23	DBZ	3	250	RoHS & Green	NIPDAU	Level-1-260C-UNLIM	-40 to 85	TK2U	Samples
TL4050A10IDCKR	ACTIVE	SC70	DCK	5	3000	RoHS & Green	NIPDAU	Level-1-260C-UNLIM	-40 to 85	8ZU	Samples
TL4050A10IDCKT	ACTIVE	SC70	DCK	5	250	RoHS & Green	NIPDAU	Level-1-260C-UNLIM	-40 to 85	8ZU	Samples
TL4050A10QDBZR	ACTIVE	SOT-23	DBZ	3	3000	RoHS & Green	NIPDAU	Level-1-260C-UNLIM	-40 to 125	TK5U	Samples
TL4050A10QDCKR	ACTIVE	SC70	DCK	5	3000	RoHS & Green	NIPDAU	Level-1-260C-UNLIM	-40 to 125	94U	Samples
TL4050A25IDBZR	ACTIVE	SOT-23	DBZ	3	3000	RoHS & Green	NIPDAU	Level-1-260C-UNLIM	-40 to 85	TKEU	Samples
TL4050A25IDBZT	ACTIVE	SOT-23	DBZ	3	250	RoHS & Green	NIPDAU	Level-1-260C-UNLIM	-40 to 85	TKEU	Samples
TL4050A25IDBZTG4	ACTIVE	SOT-23	DBZ	3	250	RoHS & Green	NIPDAU	Level-1-260C-UNLIM	-40 to 85	TKEU	Samples
TL4050A25IDCKR	ACTIVE	SC70	DCK	5	3000	RoHS & Green	NIPDAU	Level-1-260C-UNLIM	-40 to 85	82U	Samples
TL4050A25IDCKT	ACTIVE	SC70	DCK	5	250	RoHS & Green	NIPDAU	Level-1-260C-UNLIM	-40 to 85	82U	Samples
TL4050A25QDBZR	ACTIVE	SOT-23	DBZ	3	3000	RoHS & Green	NIPDAU	Level-1-260C-UNLIM	-40 to 125	TKHU	Samples
TL4050A25QDBZT	ACTIVE	SOT-23	DBZ	3	250	RoHS & Green	NIPDAU	Level-1-260C-UNLIM	-40 to 125	TKHU	Samples
TL4050A25QDCKR	ACTIVE	SC70	DCK	5	3000	RoHS & Green	NIPDAU	Level-1-260C-UNLIM	-40 to 125	85U	Samples
TL4050A41IDBZR	ACTIVE	SOT-23	DBZ	3	3000	RoHS & Green	NIPDAU	Level-1-260C-UNLIM	-40 to 85	(TKL3, TKLU)	Samples
TL4050A41IDBZT	ACTIVE	SOT-23	DBZ	3	250	RoHS & Green	NIPDAU	Level-1-260C-UNLIM	-40 to 85	(TKL3, TKLU)	Samples
TL4050A41QDBZR	ACTIVE	SOT-23	DBZ	3	3000	RoHS & Green	NIPDAU	Level-1-260C-UNLIM	-40 to 125	(TKP3, TKPU)	Samples
TL4050A41QDBZT	ACTIVE	SOT-23	DBZ	3	250	RoHS & Green	NIPDAU	Level-1-260C-UNLIM	-40 to 125	(TKP3, TKPU)	Samples
TL4050A41QDCKR	ACTIVE	SC70	DCK	5	3000	RoHS & Green	NIPDAU	Level-1-260C-UNLIM	-40 to 125	8HU	Samples
TL4050A50IDBZR	ACTIVE	SOT-23	DBZ	3	3000	RoHS & Green	NIPDAU	Level-1-260C-UNLIM	-40 to 85	(TKS3, TKSU)	Samples

Orderable Device	Status (1)	Package Type	Package Drawing	Pins	Package Qty	Eco Plan (2)	Lead finish/ Ball material (6)	MSL Peak Temp (3)	Op Temp (°C)	Device Marking (4/5)	Samples
TL4050A50IDBZT	ACTIVE	SOT-23	DBZ	3	250	RoHS & Green	NIPDAU	Level-1-260C-UNLIM	-40 to 85	(TKS3, TKSU)	Samples
TL4050A50IDCKR	ACTIVE	SC70	DCK	5	3000	RoHS & Green	NIPDAU	Level-1-260C-UNLIM	-40 to 85	8LU	Samples
TL4050A50IDCKT	ACTIVE	SC70	DCK	5	250	RoHS & Green	NIPDAU	Level-1-260C-UNLIM	-40 to 85	8LU	Samples
TL4050A50QDBZR	ACTIVE	SOT-23	DBZ	3	3000	RoHS & Green	NIPDAU	Level-1-260C-UNLIM	-40 to 125	(TKV3, TKVU)	Samples
TL4050A50QDBZT	ACTIVE	SOT-23	DBZ	3	250	RoHS & Green	NIPDAU	Level-1-260C-UNLIM	-40 to 125	(TKV3, TKVU)	Samples
TL4050A50QDCKR	ACTIVE	SC70	DCK	5	3000	RoHS & Green	NIPDAU	Level-1-260C-UNLIM	-40 to 125	8PU	Samples
TL4050B10IDBZR	ACTIVE	SOT-23	DBZ	3	3000	RoHS & Green	NIPDAU	Level-1-260C-UNLIM	-40 to 85	TK3U	Samples
TL4050B10IDBZT	ACTIVE	SOT-23	DBZ	3	250	RoHS & Green	NIPDAU	Level-1-260C-UNLIM	-40 to 85	TK3U	Samples
TL4050B10QDBZR	ACTIVE	SOT-23	DBZ	3	3000	RoHS & Green	NIPDAU	Level-1-260C-UNLIM	-40 to 125	TK6U	Samples
TL4050B10QDBZT	ACTIVE	SOT-23	DBZ	3	250	RoHS & Green	NIPDAU	Level-1-260C-UNLIM	-40 to 125	TK6U	Samples
TL4050B10QDCKR	ACTIVE	SC70	DCK	5	3000	RoHS & Green	NIPDAU	Level-1-260C-UNLIM	-40 to 125	95U	Samples
TL4050B25IDBZR	ACTIVE	SOT-23	DBZ	3	3000	RoHS & Green	NIPDAU	Level-1-260C-UNLIM	-40 to 85	TKFU	Samples
TL4050B25IDBZT	ACTIVE	SOT-23	DBZ	3	250	RoHS & Green	NIPDAU	Level-1-260C-UNLIM	-40 to 85	TKFU	Samples
TL4050B25IDCKR	ACTIVE	SC70	DCK	5	3000	RoHS & Green	NIPDAU	Level-1-260C-UNLIM	-40 to 85	83U	Samples
TL4050B25QDBZR	ACTIVE	SOT-23	DBZ	3	3000	RoHS & Green	NIPDAU	Level-1-260C-UNLIM	-40 to 125	TKJU	Samples
TL4050B25QDCKR	ACTIVE	SC70	DCK	5	3000	RoHS & Green	NIPDAU	Level-1-260C-UNLIM	-40 to 125	86U	Samples
TL4050B41IDBZR	ACTIVE	SOT-23	DBZ	3	3000	RoHS & Green	NIPDAU	Level-1-260C-UNLIM	-40 to 85	TKMU	Samples
TL4050B41IDBZRG4	ACTIVE	SOT-23	DBZ	3	3000	RoHS & Green	NIPDAU	Level-1-260C-UNLIM	-40 to 85	TKMU	Samples
TL4050B41IDBZT	ACTIVE	SOT-23	DBZ	3	250	RoHS & Green	NIPDAU	Level-1-260C-UNLIM	-40 to 85	TKMU	Samples
TL4050B41IDCKR	ACTIVE	SC70	DCK	5	3000	RoHS & Green	NIPDAU	Level-1-260C-UNLIM	-40 to 85	8FU	Samples
TL4050B41IDCKT	ACTIVE	SC70	DCK	5	250	RoHS & Green	NIPDAU	Level-1-260C-UNLIM	-40 to 85	8FU	Samples

Orderable Device	Status (1)	Package Type	Package Drawing	Pins	Package Qty	Eco Plan (2)	Lead finish/ Ball material (6)	MSL Peak Temp (3)	Op Temp (°C)	Device Marking (4/5)	Samples
TL4050B41QDBZR	ACTIVE	SOT-23	DBZ	3	3000	RoHS & Green	NIPDAU	Level-1-260C-UNLIM	-40 to 125	(TKQ3, TKQU)	Samples
TL4050B41QDBZT	ACTIVE	SOT-23	DBZ	3	250	RoHS & Green	NIPDAU	Level-1-260C-UNLIM	-40 to 125	(TKQ3, TKQU)	Samples
TL4050B41QDBZTG4	ACTIVE	SOT-23	DBZ	3	250	RoHS & Green	NIPDAU	Level-1-260C-UNLIM	-40 to 125	(TKQ3, TKQU)	Samples
TL4050B50IDBZR	ACTIVE	SOT-23	DBZ	3	3000	RoHS & Green	NIPDAU	Level-1-260C-UNLIM	-40 to 85	(TKT3, TKTU)	Samples
TL4050B50IDBZT	ACTIVE	SOT-23	DBZ	3	250	RoHS & Green	NIPDAU	Level-1-260C-UNLIM	-40 to 85	(TKT3, TKTU)	Samples
TL4050B50IDBZTG4	ACTIVE	SOT-23	DBZ	3	250	RoHS & Green	NIPDAU	Level-1-260C-UNLIM	-40 to 85	(TKT3, TKTU)	Samples
TL4050B50IDCKR	ACTIVE	SC70	DCK	5	3000	RoHS & Green	NIPDAU	Level-1-260C-UNLIM	-40 to 85	8MU	Samples
TL4050B50QDBZR	ACTIVE	SOT-23	DBZ	3	3000	RoHS & Green	NIPDAU	Level-1-260C-UNLIM	-40 to 125	(TKW3, TKWU)	Samples
TL4050B50QDCKR	ACTIVE	SC70	DCK	5	3000	RoHS & Green	NIPDAU	Level-1-260C-UNLIM	-40 to 125	8RU	Samples
TL4050C10IDBZR	ACTIVE	SOT-23	DBZ	3	3000	RoHS & Green	NIPDAU	Level-1-260C-UNLIM	-40 to 85	(TK43, TK4U)	Samples
TL4050C10IDBZT	ACTIVE	SOT-23	DBZ	3	250	RoHS & Green	NIPDAU	Level-1-260C-UNLIM	-40 to 85	(TK43, TK4U)	Samples
TL4050C10QDBZR	ACTIVE	SOT-23	DBZ	3	3000	RoHS & Green	NIPDAU	Level-1-260C-UNLIM	-40 to 125	(TK73, TK7U)	Samples
TL4050C25IDBZR	ACTIVE	SOT-23	DBZ	3	3000	RoHS & Green	NIPDAU	Level-1-260C-UNLIM	-40 to 85	TKGU	Samples
TL4050C25IDBZT	ACTIVE	SOT-23	DBZ	3	250	RoHS & Green	NIPDAU	Level-1-260C-UNLIM	-40 to 85	TKGU	Samples
TL4050C25IDBZTG4	ACTIVE	SOT-23	DBZ	3	250	RoHS & Green	NIPDAU	Level-1-260C-UNLIM	-40 to 85	TKGU	Samples
TL4050C25IDCKR	ACTIVE	SC70	DCK	5	3000	RoHS & Green	NIPDAU	Level-1-260C-UNLIM	-40 to 85	84U	Samples
TL4050C25IDCKT	ACTIVE	SC70	DCK	5	250	RoHS & Green	NIPDAU	Level-1-260C-UNLIM	-40 to 85	84U	Samples
TL4050C25QDBZR	ACTIVE	SOT-23	DBZ	3	3000	RoHS & Green	NIPDAU	Level-1-260C-UNLIM	-40 to 125	TKKU	Samples
TL4050C25QDCKR	ACTIVE	SC70	DCK	5	3000	RoHS & Green	NIPDAU	Level-1-260C-UNLIM	-40 to 125	87U	Samples
TL4050C41IDBZR	ACTIVE	SOT-23	DBZ	3	3000	RoHS & Green	NIPDAU	Level-1-260C-UNLIM	-40 to 85	TKNU	Samples
TL4050C41IDBZT	ACTIVE	SOT-23	DBZ	3	250	RoHS & Green	NIPDAU	Level-1-260C-UNLIM	-40 to 85	TKNU	Samples

Orderable Device	Status (1)	Package Type	Package Drawing	Pins	Package Qty	Eco Plan (2)	Lead finish/ Ball material (6)	MSL Peak Temp (3)	Op Temp (°C)	Device Marking (4/5)	Samples
TL4050C41IDCKR	ACTIVE	SC70	DCK	5	3000	RoHS & Green	NIPDAU	Level-1-260C-UNLIM	-40 to 85	8GU	Samples
TL4050C41QDBZR	ACTIVE	SOT-23	DBZ	3	3000	RoHS & Green	NIPDAU	Level-1-260C-UNLIM	-40 to 125	TKRU	Samples
TL4050C41QDCKR	ACTIVE	SC70	DCK	5	3000	RoHS & Green	NIPDAU	Level-1-260C-UNLIM	-40 to 125	8KU	Samples
TL4050C41QDCKT	ACTIVE	SC70	DCK	5	250	RoHS & Green	NIPDAU	Level-1-260C-UNLIM	-40 to 125	8KU	Samples
TL4050C50IDBZR	ACTIVE	SOT-23	DBZ	3	3000	RoHS & Green	NIPDAU	Level-1-260C-UNLIM	-40 to 85	(TKU3, TKUU)	Samples
TL4050C50IDBZT	ACTIVE	SOT-23	DBZ	3	250	RoHS & Green	NIPDAU	Level-1-260C-UNLIM	-40 to 85	(TKU3, TKUU)	Samples
TL4050C50IDCKR	ACTIVE	SC70	DCK	5	3000	RoHS & Green	NIPDAU	Level-1-260C-UNLIM	-40 to 85	8NU	Samples
TL4050C50IDCKT	ACTIVE	SC70	DCK	5	250	RoHS & Green	NIPDAU	Level-1-260C-UNLIM	-40 to 85	8NU	Samples
TL4050C50QDBZR	ACTIVE	SOT-23	DBZ	3	3000	RoHS & Green	NIPDAU	Level-1-260C-UNLIM	-40 to 125	(TKY3, TKYU)	Samples
TL4050C50QDCKR	ACTIVE	SC70	DCK	5	3000	RoHS & Green	NIPDAU	Level-1-260C-UNLIM	-40 to 125	8SU	Samples

(1) The marketing status values are defined as follows:
ACTIVE: Product device recommended for new designs.
LIFEBUY: TI has announced that the device will be discontinued, and a lifetime-buy period is in effect.
NRND: Not recommended for new designs. Device is in production to support existing customers, but TI does not recommend using this part in a new design.
PREVIEW: Device has been announced but is not in production. Samples may or may not be available.
OBSOLETE: TI has discontinued the production of the device.

(2) **RoHS:** TI defines "RoHS" to mean semiconductor products that are compliant with the current EU RoHS requirements for all 10 RoHS substances, including the requirement that RoHS substance do not exceed 0.1% by weight in homogeneous materials. Where designed to be soldered at high temperatures, "RoHS" products are suitable for use in specified lead-free processes. TI may reference these types of products as "Pb-Free".
RoHS Exempt: TI defines "RoHS Exempt" to mean products that contain lead but are compliant with EU RoHS pursuant to a specific EU RoHS exemption.
Green: TI defines "Green" to mean the content of Chlorine (Cl) and Bromine (Br) based flame retardants meet JS709B low halogen requirements of <=1000ppm threshold. Antimony trioxide based flame retardants must also meet the <=1000ppm threshold requirement.

(3) MSL, Peak Temp. - The Moisture Sensitivity Level rating according to the JEDEC industry standard classifications, and peak solder temperature.

(4) There may be additional marking, which relates to the logo, the lot trace code information, or the environmental category on the device.

(5) Multiple Device Markings will be inside parentheses. Only one Device Marking contained in parentheses and separated by a "~" will appear on a device. If a line is indented then it is a continuation of the previous line and the two combined represent the entire Device Marking for that device.

(6) Lead finish/Ball material - Orderable Devices may have multiple material finish options. Finish options are separated by a vertical ruled line. Lead finish/Ball material values may wrap to two lines if the finish value exceeds the maximum column width.

Important Information and Disclaimer: The information provided on this page represents TI's knowledge and belief as of the date that it is provided. TI bases its knowledge and belief on information provided by third parties, and makes no representation or warranty as to the accuracy of such information. Efforts are underway to better integrate information from third parties. TI has taken and continues to take reasonable steps to provide representative and accurate information but may not have conducted destructive testing or chemical analysis on incoming materials and chemicals. TI and TI suppliers consider certain information to be proprietary, and thus CAS numbers and other limited information may not be available for release.

In no event shall TI's liability arising out of such information exceed the total purchase price of the TI part(s) at issue in this document sold by TI to Customer on an annual basis.

TAPE AND REEL INFORMATION

REEL DIMENSIONS

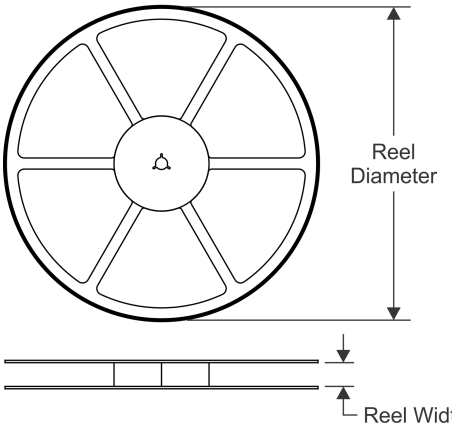

TAPE DIMENSIONS

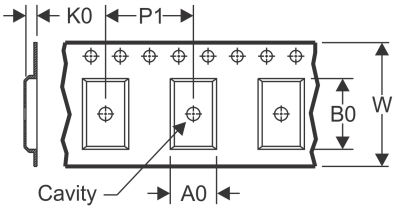

A0	Dimension designed to accommodate the component width
B0	Dimension designed to accommodate the component length
K0	Dimension designed to accommodate the component thickness
W	Overall width of the carrier tape
P1	Pitch between successive cavity centers

QUADRANT ASSIGNMENTS FOR PIN 1 ORIENTATION IN TAPE

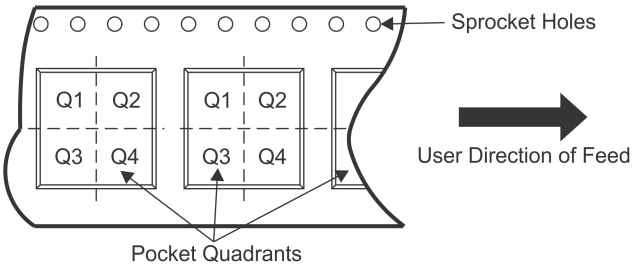

*All dimensions are nominal

Device	Package Type	Package Drawing	Pins	SPQ	Reel Diameter (mm)	Reel Width W1 (mm)	A0 (mm)	B0 (mm)	K0 (mm)	P1 (mm)	W (mm)	Pin1 Quadrant
TL4050A10IDBZR	SOT-23	DBZ	3	3000	179.0	8.4	3.15	2.95	1.22	4.0	8.0	Q3
TL4050A10IDBZT	SOT-23	DBZ	3	250	179.0	8.4	3.15	2.95	1.22	4.0	8.0	Q3
TL4050A10IDCKR	SC70	DCK	5	3000	179.0	8.4	2.2	2.5	1.2	4.0	8.0	Q3
TL4050A10IDCKT	SC70	DCK	5	250	179.0	8.4	2.2	2.5	1.2	4.0	8.0	Q3
TL4050A10QDBZR	SOT-23	DBZ	3	3000	179.0	8.4	3.15	2.95	1.22	4.0	8.0	Q3
TL4050A10QDCKR	SC70	DCK	5	3000	179.0	8.4	2.2	2.5	1.2	4.0	8.0	Q3
TL4050A25IDBZR	SOT-23	DBZ	3	3000	179.0	8.4	3.15	2.95	1.22	4.0	8.0	Q3
TL4050A25IDBZT	SOT-23	DBZ	3	250	179.0	8.4	3.15	2.95	1.22	4.0	8.0	Q3
TL4050A25IDCKR	SC70	DCK	5	3000	179.0	8.4	2.2	2.5	1.2	4.0	8.0	Q3
TL4050A25IDCKT	SC70	DCK	5	250	179.0	8.4	2.2	2.5	1.2	4.0	8.0	Q3
TL4050A25QDBZR	SOT-23	DBZ	3	3000	179.0	8.4	3.15	2.95	1.22	4.0	8.0	Q3
TL4050A25QDBZT	SOT-23	DBZ	3	250	179.0	8.4	3.15	2.95	1.22	4.0	8.0	Q3
TL4050A25QDCKR	SC70	DCK	5	3000	179.0	8.4	2.2	2.5	1.2	4.0	8.0	Q3
TL4050A41IDBZR	SOT-23	DBZ	3	3000	179.0	8.4	3.15	2.95	1.22	4.0	8.0	Q3
TL4050A41IDBZR	SOT-23	DBZ	3	3000	178.0	9.2	3.15	2.77	1.22	4.0	8.0	Q3
TL4050A41IDBZT	SOT-23	DBZ	3	250	178.0	9.2	3.15	2.77	1.22	4.0	8.0	Q3
TL4050A41IDBZT	SOT-23	DBZ	3	250	179.0	8.4	3.15	2.95	1.22	4.0	8.0	Q3
TL4050A41QDBZR	SOT-23	DBZ	3	3000	178.0	9.2	3.15	2.77	1.22	4.0	8.0	Q3

Device	Package Type	Package Drawing	Pins	SPQ	Reel Diameter (mm)	Reel Width W1 (mm)	A0 (mm)	B0 (mm)	K0 (mm)	P1 (mm)	W (mm)	Pin1 Quadrant
TL4050A41QDBZR	SOT-23	DBZ	3	3000	179.0	8.4	3.15	2.95	1.22	4.0	8.0	Q3
TL4050A41QDBZT	SOT-23	DBZ	3	250	178.0	9.2	3.15	2.77	1.22	4.0	8.0	Q3
TL4050A41QDCKR	SC70	DCK	5	3000	179.0	8.4	2.2	2.5	1.2	4.0	8.0	Q3
TL4050A50IDBZR	SOT-23	DBZ	3	3000	178.0	9.2	3.15	2.77	1.22	4.0	8.0	Q3
TL4050A50IDBZR	SOT-23	DBZ	3	3000	179.0	8.4	3.15	2.95	1.22	4.0	8.0	Q3
TL4050A50IDBZT	SOT-23	DBZ	3	250	179.0	8.4	3.15	2.95	1.22	4.0	8.0	Q3
TL4050A50IDBZT	SOT-23	DBZ	3	250	178.0	9.2	3.15	2.77	1.22	4.0	8.0	Q3
TL4050A50IDCKR	SC70	DCK	5	3000	179.0	8.4	2.2	2.5	1.2	4.0	8.0	Q3
TL4050A50IDCKT	SC70	DCK	5	250	179.0	8.4	2.2	2.5	1.2	4.0	8.0	Q3
TL4050A50QDBZR	SOT-23	DBZ	3	3000	179.0	8.4	3.15	2.95	1.22	4.0	8.0	Q3
TL4050A50QDBZR	SOT-23	DBZ	3	3000	178.0	9.2	3.15	2.77	1.22	4.0	8.0	Q3
TL4050A50QDBZT	SOT-23	DBZ	3	250	178.0	9.2	3.15	2.77	1.22	4.0	8.0	Q3
TL4050A50QDBZT	SOT-23	DBZ	3	250	179.0	8.4	3.15	2.95	1.22	4.0	8.0	Q3
TL4050A50QDCKR	SC70	DCK	5	3000	179.0	8.4	2.2	2.5	1.2	4.0	8.0	Q3
TL4050B10IDBZR	SOT-23	DBZ	3	3000	179.0	8.4	3.15	2.95	1.22	4.0	8.0	Q3
TL4050B10IDBZT	SOT-23	DBZ	3	250	179.0	8.4	3.15	2.95	1.22	4.0	8.0	Q3
TL4050B10QDBZR	SOT-23	DBZ	3	3000	179.0	8.4	3.15	2.95	1.22	4.0	8.0	Q3
TL4050B10QDBZT	SOT-23	DBZ	3	250	179.0	8.4	3.15	2.95	1.22	4.0	8.0	Q3
TL4050B10QDCKR	SC70	DCK	5	3000	179.0	8.4	2.2	2.5	1.2	4.0	8.0	Q3
TL4050B25IDBZR	SOT-23	DBZ	3	3000	179.0	8.4	3.15	2.95	1.22	4.0	8.0	Q3
TL4050B25IDBZT	SOT-23	DBZ	3	250	179.0	8.4	3.15	2.95	1.22	4.0	8.0	Q3
TL4050B25IDCKR	SC70	DCK	5	3000	179.0	8.4	2.2	2.5	1.2	4.0	8.0	Q3
TL4050B25QDBZR	SOT-23	DBZ	3	3000	179.0	8.4	3.15	2.95	1.22	4.0	8.0	Q3
TL4050B25QDCKR	SC70	DCK	5	3000	179.0	8.4	2.2	2.5	1.2	4.0	8.0	Q3
TL4050B41IDBZR	SOT-23	DBZ	3	3000	179.0	8.4	3.15	2.95	1.22	4.0	8.0	Q3
TL4050B41IDBZT	SOT-23	DBZ	3	250	179.0	8.4	3.15	2.95	1.22	4.0	8.0	Q3
TL4050B41IDCKR	SC70	DCK	5	3000	179.0	8.4	2.2	2.5	1.2	4.0	8.0	Q3
TL4050B41IDCKT	SC70	DCK	5	250	179.0	8.4	2.2	2.5	1.2	4.0	8.0	Q3
TL4050B41QDBZR	SOT-23	DBZ	3	3000	178.0	9.2	3.15	2.77	1.22	4.0	8.0	Q3
TL4050B41QDBZR	SOT-23	DBZ	3	3000	179.0	8.4	3.15	2.95	1.22	4.0	8.0	Q3
TL4050B41QDBZT	SOT-23	DBZ	3	250	178.0	9.2	3.15	2.77	1.22	4.0	8.0	Q3
TL4050B50IDBZR	SOT-23	DBZ	3	3000	179.0	8.4	3.15	2.95	1.22	4.0	8.0	Q3
TL4050B50IDBZR	SOT-23	DBZ	3	3000	178.0	9.2	3.15	2.77	1.22	4.0	8.0	Q3
TL4050B50IDBZT	SOT-23	DBZ	3	250	178.0	9.2	3.15	2.77	1.22	4.0	8.0	Q3
TL4050B50IDCKR	SC70	DCK	5	3000	179.0	8.4	2.2	2.5	1.2	4.0	8.0	Q3
TL4050B50QDBZR	SOT-23	DBZ	3	3000	179.0	8.4	3.15	2.95	1.22	4.0	8.0	Q3
TL4050B50QDBZR	SOT-23	DBZ	3	3000	178.0	9.2	3.15	2.77	1.22	4.0	8.0	Q3
TL4050B50QDCKR	SC70	DCK	5	3000	179.0	8.4	2.2	2.5	1.2	4.0	8.0	Q3
TL4050C10IDBZR	SOT-23	DBZ	3	3000	178.0	9.2	3.15	2.77	1.22	4.0	8.0	Q3
TL4050C10IDBZR	SOT-23	DBZ	3	3000	179.0	8.4	3.15	2.95	1.22	4.0	8.0	Q3
TL4050C10IDBZT	SOT-23	DBZ	3	250	178.0	9.2	3.15	2.77	1.22	4.0	8.0	Q3
TL4050C10IDBZT	SOT-23	DBZ	3	250	179.0	8.4	3.15	2.95	1.22	4.0	8.0	Q3
TL4050C10QDBZR	SOT-23	DBZ	3	3000	179.0	8.4	3.15	2.95	1.22	4.0	8.0	Q3

Device	Package Type	Package Drawing	Pins	SPQ	Reel Diameter (mm)	Reel Width W1 (mm)	A0 (mm)	B0 (mm)	K0 (mm)	P1 (mm)	W (mm)	Pin1 Quadrant
TL4050C10QDBZR	SOT-23	DBZ	3	3000	178.0	9.2	3.15	2.77	1.22	4.0	8.0	Q3
TL4050C25IDBZR	SOT-23	DBZ	3	3000	179.0	8.4	3.15	2.95	1.22	4.0	8.0	Q3
TL4050C25IDBZT	SOT-23	DBZ	3	250	179.0	8.4	3.15	2.95	1.22	4.0	8.0	Q3
TL4050C25IDCKR	SC70	DCK	5	3000	179.0	8.4	2.2	2.5	1.2	4.0	8.0	Q3
TL4050C25IDCKT	SC70	DCK	5	250	179.0	8.4	2.2	2.5	1.2	4.0	8.0	Q3
TL4050C25QDBZR	SOT-23	DBZ	3	3000	179.0	8.4	3.15	2.95	1.22	4.0	8.0	Q3
TL4050C25QDCKR	SC70	DCK	5	3000	179.0	8.4	2.2	2.5	1.2	4.0	8.0	Q3
TL4050C41IDBZR	SOT-23	DBZ	3	3000	179.0	8.4	3.15	2.95	1.22	4.0	8.0	Q3
TL4050C41IDBZT	SOT-23	DBZ	3	250	179.0	8.4	3.15	2.95	1.22	4.0	8.0	Q3
TL4050C41IDCKR	SC70	DCK	5	3000	179.0	8.4	2.2	2.5	1.2	4.0	8.0	Q3
TL4050C41QDBZR	SOT-23	DBZ	3	3000	179.0	8.4	3.15	2.95	1.22	4.0	8.0	Q3
TL4050C41QDCKR	SC70	DCK	5	3000	179.0	8.4	2.2	2.5	1.2	4.0	8.0	Q3
TL4050C41QDCKT	SC70	DCK	5	250	179.0	8.4	2.2	2.5	1.2	4.0	8.0	Q3
TL4050C50IDBZR	SOT-23	DBZ	3	3000	179.0	8.4	3.15	2.95	1.22	4.0	8.0	Q3
TL4050C50IDBZR	SOT-23	DBZ	3	3000	178.0	9.2	3.15	2.77	1.22	4.0	8.0	Q3
TL4050C50IDBZT	SOT-23	DBZ	3	250	179.0	8.4	3.15	2.95	1.22	4.0	8.0	Q3
TL4050C50IDBZT	SOT-23	DBZ	3	250	178.0	9.2	3.15	2.77	1.22	4.0	8.0	Q3
TL4050C50IDCKR	SC70	DCK	5	3000	179.0	8.4	2.2	2.5	1.2	4.0	8.0	Q3
TL4050C50IDCKT	SC70	DCK	5	250	179.0	8.4	2.2	2.5	1.2	4.0	8.0	Q3
TL4050C50QDBZR	SOT-23	DBZ	3	3000	178.0	9.2	3.15	2.77	1.22	4.0	8.0	Q3
TL4050C50QDCKR	SC70	DCK	5	3000	179.0	8.4	2.2	2.5	1.2	4.0	8.0	Q3

TAPE AND REEL BOX DIMENSIONS

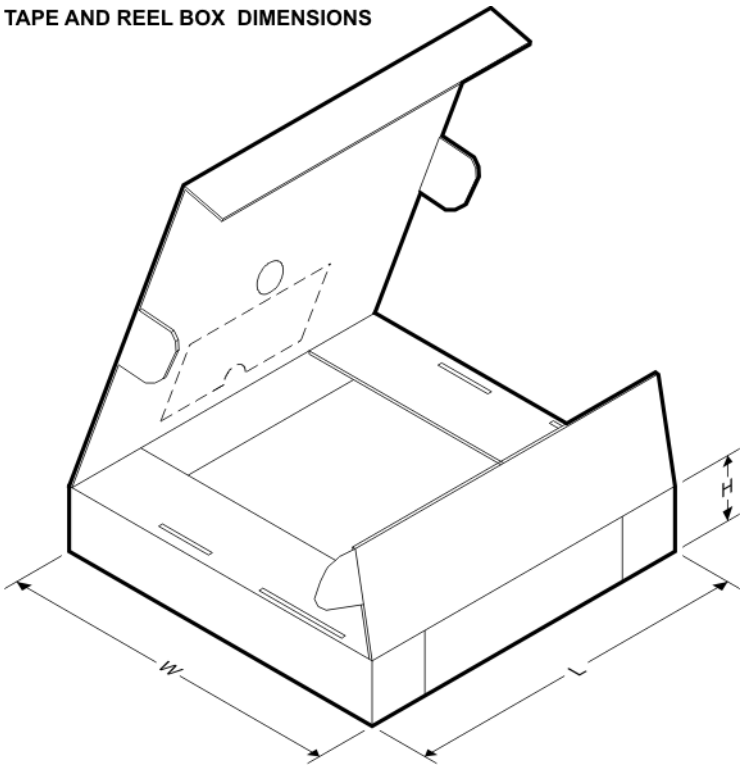

*All dimensions are nominal

Device	Package Type	Package Drawing	Pins	SPQ	Length (mm)	Width (mm)	Height (mm)
TL4050A10IDBZR	SOT-23	DBZ	3	3000	200.0	183.0	25.0
TL4050A10IDBZT	SOT-23	DBZ	3	250	203.0	203.0	35.0
TL4050A10IDCKR	SC70	DCK	5	3000	200.0	183.0	25.0
TL4050A10IDCKT	SC70	DCK	5	250	200.0	183.0	25.0
TL4050A10QDBZR	SOT-23	DBZ	3	3000	200.0	183.0	25.0
TL4050A10QDCKR	SC70	DCK	5	3000	200.0	183.0	25.0
TL4050A25IDBZR	SOT-23	DBZ	3	3000	200.0	183.0	25.0
TL4050A25IDBZT	SOT-23	DBZ	3	250	200.0	183.0	25.0
TL4050A25IDCKR	SC70	DCK	5	3000	200.0	183.0	25.0
TL4050A25IDCKT	SC70	DCK	5	250	203.0	203.0	35.0
TL4050A25QDBZR	SOT-23	DBZ	3	3000	200.0	183.0	25.0
TL4050A25QDBZT	SOT-23	DBZ	3	250	203.0	203.0	35.0
TL4050A25QDCKR	SC70	DCK	5	3000	203.0	203.0	35.0
TL4050A41IDBZR	SOT-23	DBZ	3	3000	203.0	203.0	35.0
TL4050A41IDBZR	SOT-23	DBZ	3	3000	180.0	180.0	18.0
TL4050A41IDBZT	SOT-23	DBZ	3	250	180.0	180.0	18.0
TL4050A41IDBZT	SOT-23	DBZ	3	250	203.0	203.0	35.0
TL4050A41QDBZR	SOT-23	DBZ	3	3000	180.0	180.0	18.0
TL4050A41QDBZR	SOT-23	DBZ	3	3000	203.0	203.0	35.0
TL4050A41QDBZT	SOT-23	DBZ	3	250	180.0	180.0	18.0

Device	Package Type	Package Drawing	Pins	SPQ	Length (mm)	Width (mm)	Height (mm)
TL4050A41QDCKR	SC70	DCK	5	3000	203.0	203.0	35.0
TL4050A50IDBZR	SOT-23	DBZ	3	3000	180.0	180.0	18.0
TL4050A50IDBZR	SOT-23	DBZ	3	3000	200.0	183.0	25.0
TL4050A50IDBZT	SOT-23	DBZ	3	250	203.0	203.0	35.0
TL4050A50IDBZT	SOT-23	DBZ	3	250	180.0	180.0	18.0
TL4050A50IDCKR	SC70	DCK	5	3000	200.0	183.0	25.0
TL4050A50IDCKT	SC70	DCK	5	250	203.0	203.0	35.0
TL4050A50QDBZR	SOT-23	DBZ	3	3000	200.0	183.0	25.0
TL4050A50QDBZR	SOT-23	DBZ	3	3000	180.0	180.0	18.0
TL4050A50QDBZT	SOT-23	DBZ	3	250	180.0	180.0	18.0
TL4050A50QDBZT	SOT-23	DBZ	3	250	203.0	203.0	35.0
TL4050A50QDCKR	SC70	DCK	5	3000	203.0	203.0	35.0
TL4050B10IDBZR	SOT-23	DBZ	3	3000	200.0	183.0	25.0
TL4050B10IDBZT	SOT-23	DBZ	3	250	203.0	203.0	35.0
TL4050B10QDBZR	SOT-23	DBZ	3	3000	203.0	203.0	35.0
TL4050B10QDBZT	SOT-23	DBZ	3	250	203.0	203.0	35.0
TL4050B10QDCKR	SC70	DCK	5	3000	203.0	203.0	35.0
TL4050B25IDBZR	SOT-23	DBZ	3	3000	200.0	183.0	25.0
TL4050B25IDBZT	SOT-23	DBZ	3	250	203.0	203.0	35.0
TL4050B25IDCKR	SC70	DCK	5	3000	203.0	203.0	35.0
TL4050B25QDBZR	SOT-23	DBZ	3	3000	200.0	183.0	25.0
TL4050B25QDCKR	SC70	DCK	5	3000	203.0	203.0	35.0
TL4050B41IDBZR	SOT-23	DBZ	3	3000	200.0	183.0	25.0
TL4050B41IDBZT	SOT-23	DBZ	3	250	200.0	183.0	25.0
TL4050B41IDCKR	SC70	DCK	5	3000	203.0	203.0	35.0
TL4050B41IDCKT	SC70	DCK	5	250	200.0	183.0	25.0
TL4050B41QDBZR	SOT-23	DBZ	3	3000	180.0	180.0	18.0
TL4050B41QDBZR	SOT-23	DBZ	3	3000	203.0	203.0	35.0
TL4050B41QDBZT	SOT-23	DBZ	3	250	180.0	180.0	18.0
TL4050B50IDBZR	SOT-23	DBZ	3	3000	200.0	183.0	25.0
TL4050B50IDBZR	SOT-23	DBZ	3	3000	180.0	180.0	18.0
TL4050B50IDBZT	SOT-23	DBZ	3	250	180.0	180.0	18.0
TL4050B50IDCKR	SC70	DCK	5	3000	203.0	203.0	35.0
TL4050B50QDBZR	SOT-23	DBZ	3	3000	200.0	183.0	25.0
TL4050B50QDBZR	SOT-23	DBZ	3	3000	180.0	180.0	18.0
TL4050B50QDCKR	SC70	DCK	5	3000	203.0	203.0	35.0
TL4050C10IDBZR	SOT-23	DBZ	3	3000	180.0	180.0	18.0
TL4050C10IDBZR	SOT-23	DBZ	3	3000	200.0	183.0	25.0
TL4050C10IDBZT	SOT-23	DBZ	3	250	180.0	180.0	18.0
TL4050C10IDBZT	SOT-23	DBZ	3	250	203.0	203.0	35.0
TL4050C10QDBZR	SOT-23	DBZ	3	3000	203.0	203.0	35.0
TL4050C10QDBZR	SOT-23	DBZ	3	3000	180.0	180.0	18.0
TL4050C25IDBZR	SOT-23	DBZ	3	3000	200.0	183.0	25.0
TL4050C25IDBZT	SOT-23	DBZ	3	250	200.0	183.0	25.0

Device	Package Type	Package Drawing	Pins	SPQ	Length (mm)	Width (mm)	Height (mm)
TL4050C25IDCKR	SC70	DCK	5	3000	203.0	203.0	35.0
TL4050C25IDCKT	SC70	DCK	5	250	203.0	203.0	35.0
TL4050C25QDBZR	SOT-23	DBZ	3	3000	200.0	183.0	25.0
TL4050C25QDCKR	SC70	DCK	5	3000	203.0	203.0	35.0
TL4050C41IDBZR	SOT-23	DBZ	3	3000	203.0	203.0	35.0
TL4050C41IDBZT	SOT-23	DBZ	3	250	203.0	203.0	35.0
TL4050C41IDCKR	SC70	DCK	5	3000	200.0	183.0	25.0
TL4050C41QDBZR	SOT-23	DBZ	3	3000	200.0	183.0	25.0
TL4050C41QDCKR	SC70	DCK	5	3000	203.0	203.0	35.0
TL4050C41QDCKT	SC70	DCK	5	250	203.0	203.0	35.0
TL4050C50IDBZR	SOT-23	DBZ	3	3000	200.0	183.0	25.0
TL4050C50IDBZR	SOT-23	DBZ	3	3000	180.0	180.0	18.0
TL4050C50IDBZT	SOT-23	DBZ	3	250	200.0	183.0	25.0
TL4050C50IDBZT	SOT-23	DBZ	3	250	180.0	180.0	18.0
TL4050C50IDCKR	SC70	DCK	5	3000	203.0	203.0	35.0
TL4050C50IDCKT	SC70	DCK	5	250	203.0	203.0	35.0
TL4050C50QDBZR	SOT-23	DBZ	3	3000	180.0	180.0	18.0
TL4050C50QDCKR	SC70	DCK	5	3000	203.0	203.0	35.0

DCK (R–PDSO–G5) PLASTIC SMALL–OUTLINE PACKAGE

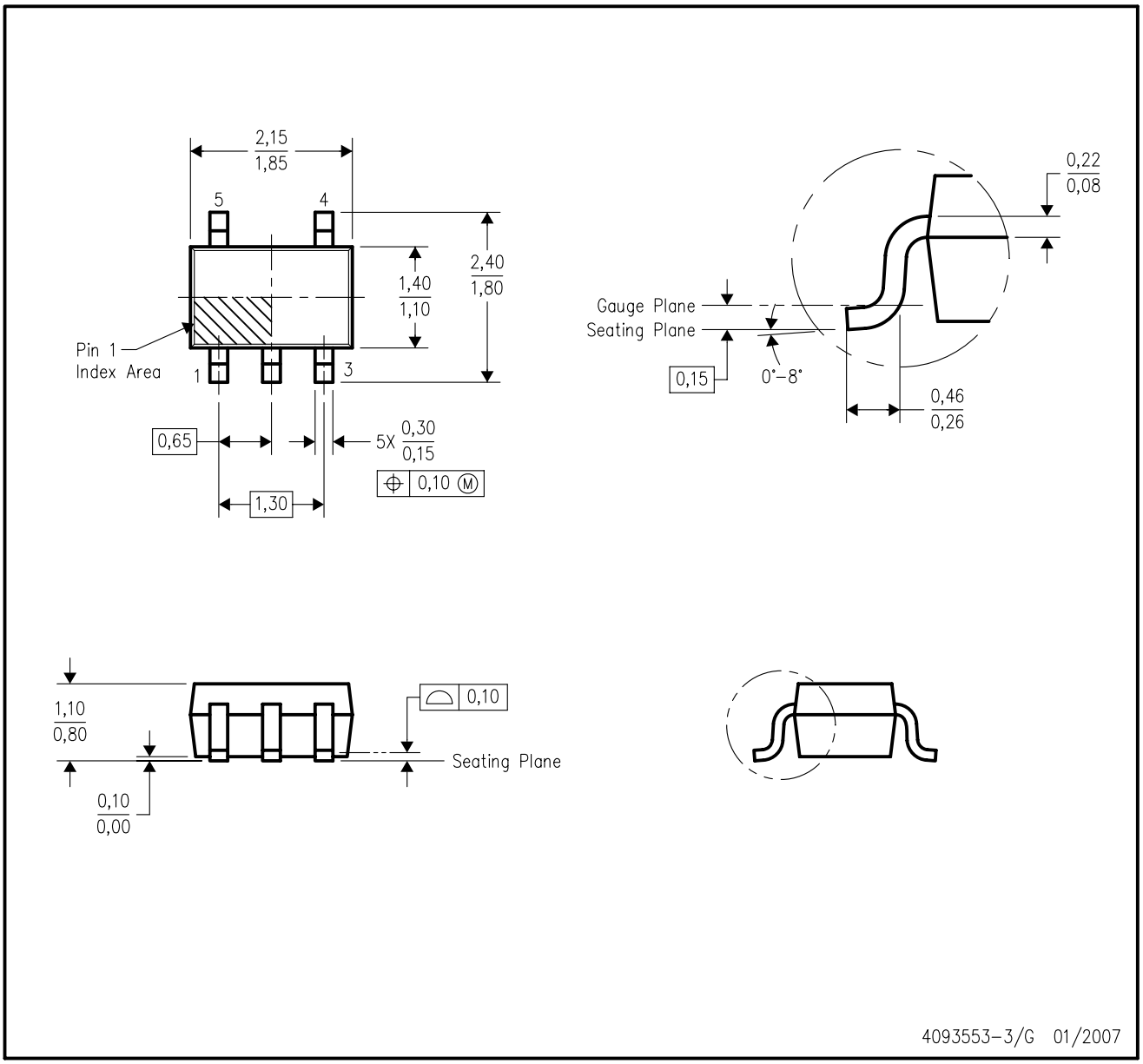

NOTES:
A. All linear dimensions are in millimeters.
B. This drawing is subject to change without notice.
C. Body dimensions do not include mold flash or protrusion. Mold flash and protrusion shall not exceed 0.15 per side.
D. Falls within JEDEC MO–203 variation AA.

DCK (R-PDSO-G5) PLASTIC SMALL OUTLINE

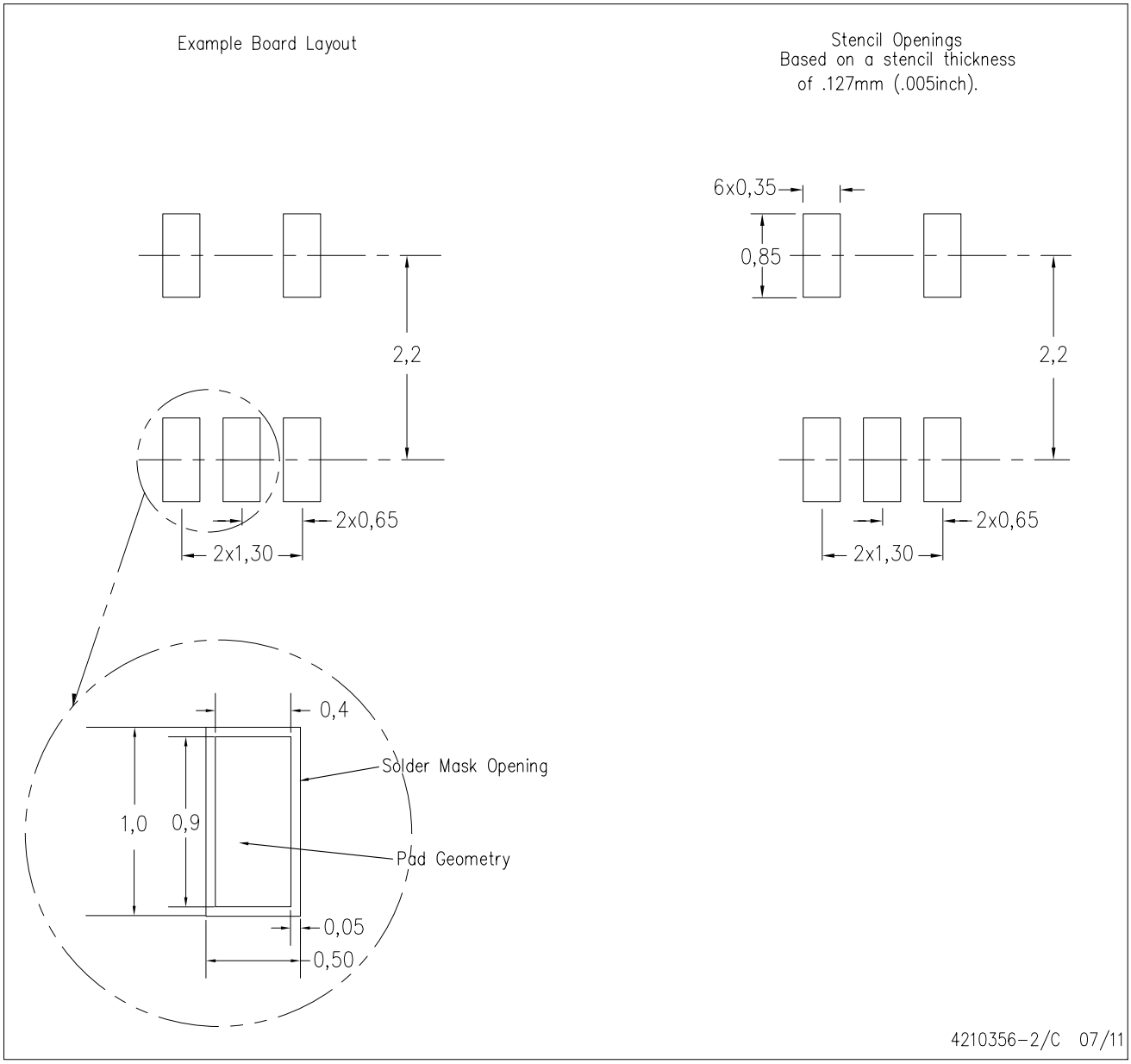

NOTES:
A. All linear dimensions are in millimeters.
B. This drawing is subject to change without notice.
C. Customers should place a note on the circuit board fabrication drawing not to alter the center solder mask defined pad.
D. Publication IPC-7351 is recommended for alternate designs.
E. Laser cutting apertures with trapezoidal walls and also rounding corners will offer better paste release. Customers should contact their board assembly site for stencil design recommendations. Example stencil design based on a 50% volumetric metal load solder paste. Refer to IPC-7525 for other stencil recommendations.

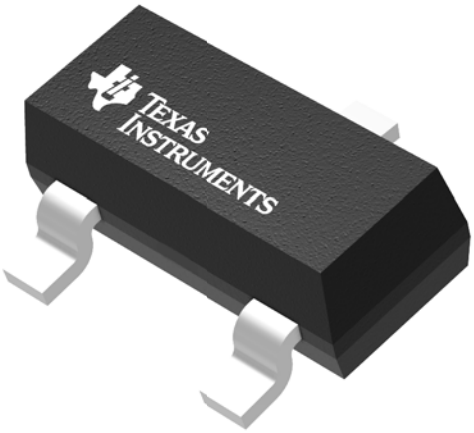

Images above are just a representation of the package family, actual package may vary.
Refer to the product data sheet for package details.

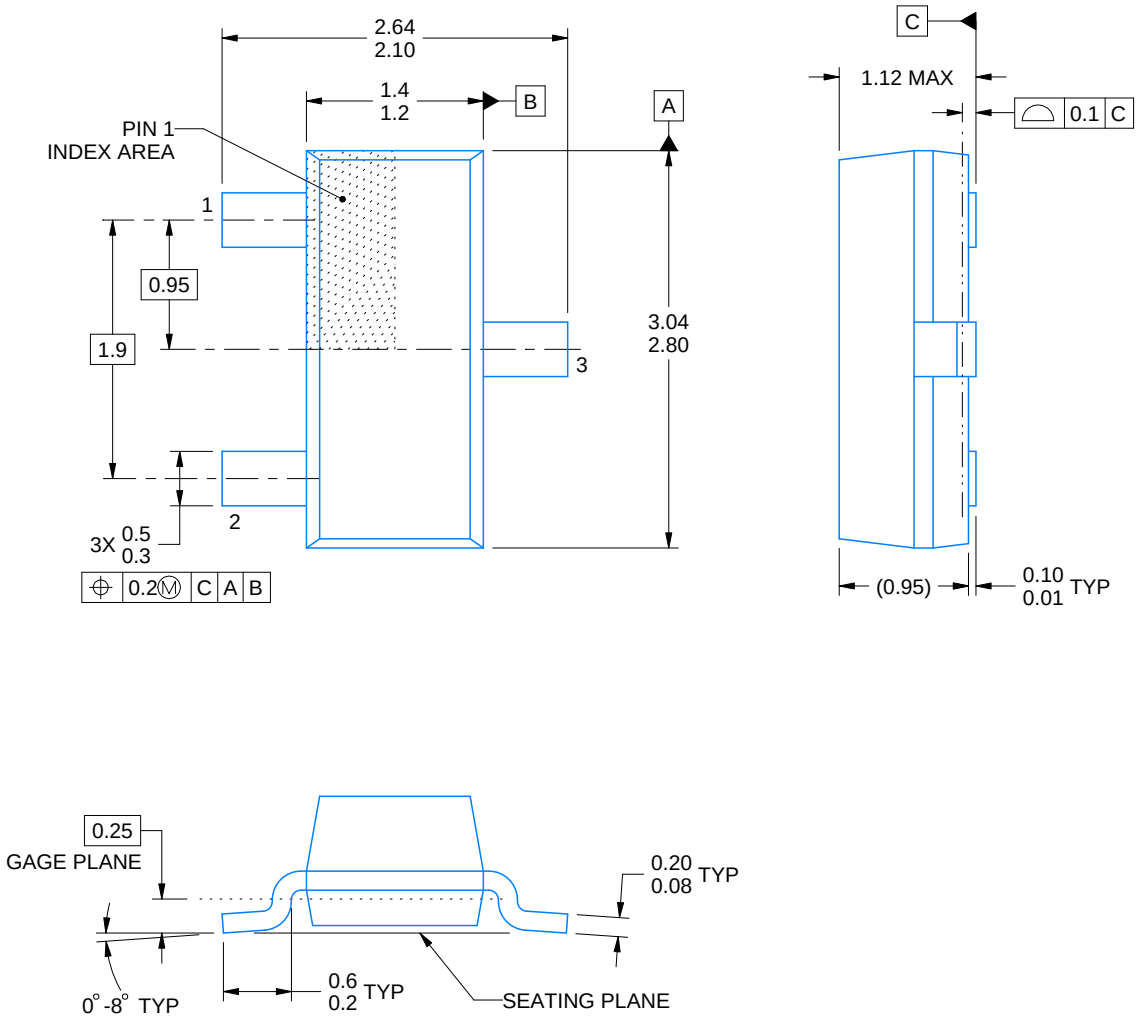

4214838/C 04/2017

NOTES:

1. All linear dimensions are in millimeters. Any dimensions in parenthesis are for reference only. Dimensioning and tolerancing per ASME Y14.5M.
2. This drawing is subject to change without notice.
3. Reference JEDEC registration TO-236, except minimum foot length.

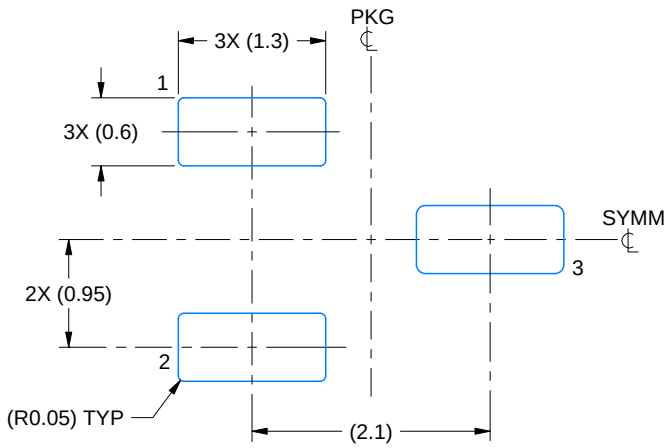

LAND PATTERN EXAMPLE
SCALE:15X

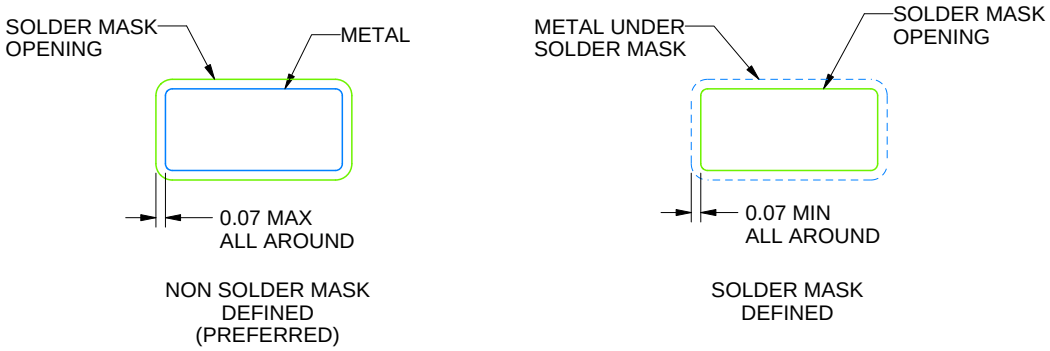

SOLDER MASK DETAILS

4214838/C 04/2017

NOTES: (continued)

4. Publication IPC-7351 may have alternate designs.
5. Solder mask tolerances between and around signal pads can vary based on board fabrication site.

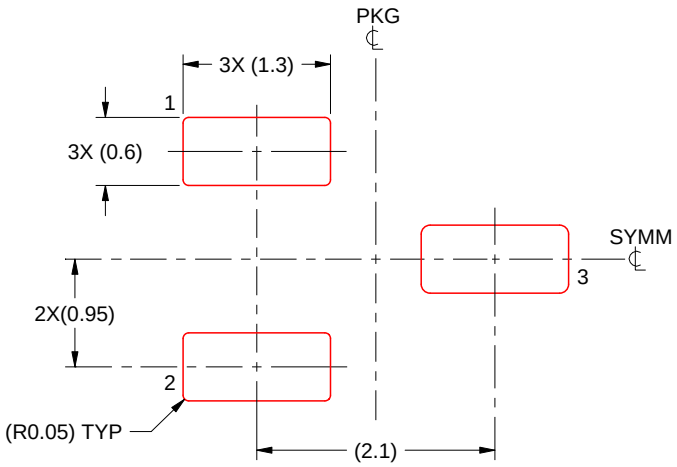

SOLDER PASTE EXAMPLE
BASED ON 0.125 THICK STENCIL
SCALE:15X

4214838/C 04/2017

NOTES: (continued)

6. Laser cutting apertures with trapezoidal walls and rounded corners may offer better paste release. IPC-7525 may have alternate design recommendations.
7. Board assembly site may have different recommendations for stencil design.

IMPORTANT NOTICE AND DISCLAIMER

TI PROVIDES TECHNICAL AND RELIABILITY DATA (INCLUDING DATASHEETS), DESIGN RESOURCES (INCLUDING REFERENCE DESIGNS), APPLICATION OR OTHER DESIGN ADVICE, WEB TOOLS, SAFETY INFORMATION, AND OTHER RESOURCES “AS IS” AND WITH ALL FAULTS, AND DISCLAIMS ALL WARRANTIES, EXPRESS AND IMPLIED, INCLUDING WITHOUT LIMITATION ANY IMPLIED WARRANTIES OF MERCHANTABILITY, FITNESS FOR A PARTICULAR PURPOSE OR NON-INFRINGEMENT OF THIRD PARTY INTELLECTUAL PROPERTY RIGHTS.

These resources are intended for skilled developers designing with TI products. You are solely responsible for (1) selecting the appropriate TI products for your application, (2) designing, validating and testing your application, and (3) ensuring your application meets applicable standards, and any other safety, security, or other requirements. These resources are subject to change without notice. TI grants you permission to use these resources only for development of an application that uses the TI products described in the resource. Other reproduction and display of these resources is prohibited. No license is granted to any other TI intellectual property right or to any third party intellectual property right. TI disclaims responsibility for, and you will fully indemnify TI and its representatives against, any claims, damages, costs, losses, and liabilities arising out of your use of these resources.

TI’s products are provided subject to TI’s Terms of Sale (https:www.ti.com/legal/termsofsale.html) or other applicable terms available either on ti.com or provided in conjunction with such TI products. TI’s provision of these resources does not expand or otherwise alter TI’s applicable warranties or warranty disclaimers for TI products.

Mailing Address: Texas Instruments, Post Office Box 655303, Dallas, Texas 75265
Copyright © 2021, Texas Instruments Incorporated