LM20 2.4-V, 10-µA, SC70, DSBGA Temperature Sensor

1 Features

- Rated for −55°C to 130°C Range
- Available in SC70 and DSBGA Package
- Predictable Curvature Error
- Suitable for Remote Applications
- Accuracy at 30°C ±1.5 to ±4°C (Maximum)
- Accuracy at 130°C and −55°C ±2.5 to ±5°C (Maximum)
- Power Supply Voltage Range 2.4 V to 5.5 V
- Current Drain 10 µA (Maximum)
- Nonlinearity ±0.4% (Typical)
- Output Impedance 160 Ω (Maximum)
- Load Regulation
  0 µA < I_L < 16 µA −2.5 mV (Maximum)

2 Applications

- Cellular Phones
- Computers
- Power Supply Modules
- Battery Management
- FAX Machines
- Printers
- HVAC
- Disk Drives
- Appliances

3 Description

The LM20 is a precision analog output CMOS integrated-circuit temperature sensor that operates over −55°C to 130°C. The power supply operating range is 2.4 V to 5.5 V. The transfer function of LM20 is predominately linear, yet has a slight predictable parabolic curvature. The accuracy of the LM20 when specified to a parabolic transfer function is ±1.5°C at an ambient temperature of 30°C. The temperature error increases linearly and reaches a maximum of ±2.5°C at the temperature range extremes. The temperature range is affected by the power supply voltage. At a power supply voltage of 2.7 V to 5.5 V, the temperature range extremes are 130°C and −55°C. Decreasing the power supply voltage to 2.4 V changes the negative extreme to −30°C, while the positive extreme remains at 130°C.

The LM20 quiescent current is less than 10 µA. Therefore, self-heating is less than 0.02°C in still air. Shutdown capability for the LM20 is intrinsic because its inherent low power consumption allows it to be powered directly from the output of many logic gates or does not necessitate shutdown.

Device Information(1)

PART NUMBER	PACKAGE	BODY SIZE (NOM)
LM20	SC70 (5)	2.00 mm × 1.25 mm
	DSBGA (4)	0.96 mm × 0.96 mm

(1) For all available packages, see the orderable addendum at the end of the data sheet.

Simplified Schematic

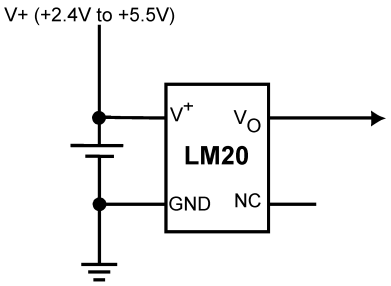

Output Voltage vs Temperature

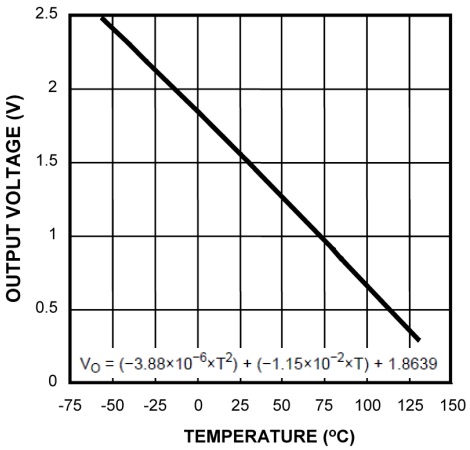

An IMPORTANT NOTICE at the end of this data sheet addresses availability, warranty, changes, use in safety-critical applications, intellectual property matters and other important disclaimers. PRODUCTION DATA.

Table of Contents

1 Features ... 1
2 Applications ... 1
3 Description ... 1
4 Revision History ... 2
5 Pin Configuration and Functions ... 3
6 Specifications ... 3
6.1 Absolute Maximum Ratings ... 3
6.2 ESD Ratings ... 4
6.3 Recommended Operating Conditions ... 4
6.4 Thermal Information ... 4
6.5 Electrical Characteristics: LM20B ... 4
6.6 Electrical Characteristics: LM20C ... 5
6.7 Electrical Characteristics: LM20S ... 6
6.8 Typical Characteristics ... 7
7 Detailed Description ... 8
7.1 Overview ... 8
7.2 Functional Block Diagram ... 8
7.3 Feature Description ... 8
7.4 Device Functional Modes ... 9
8 Application and Implementation ... 10
8.1 Application Information ... 10
8.2 Typical Applications ... 11
8.3 System Examples ... 14
9 Power Supply Recommendations ... 15
10 Layout ... 15
10.1 Layout Guidelines ... 15
10.2 Layout Examples ... 15
10.3 Thermal Considerations ... 15
11 Device and Documentation Support ... 17
11.1 Trademarks ... 17
11.2 Electrostatic Discharge Caution ... 17
11.3 Glossary ... 17
12 Mechanical, Packaging, and Orderable Information ... 17

4 Revision History

Changes from Revision P (Feburary 2013) to Revision Q **Page**

- Added *Pin Configuration and Functions* section, *ESD Ratings* table, *Feature Description* section, *Device Functional Modes*, *Application and Implementation* section, *Power Supply Recommendations* section, *Layout* section, *Device and Documentation Support* section, and *Mechanical, Packaging, and Orderable Information* section ... 1

Changes from Revision O (February 2013) to Revision P **Page**

- Changed layout of National Data Sheet to TI Format ... 14

Copyright © 1999–2015, Texas Instruments Incorporated

5 Pin Configuration and Functions

DCK Package
5-Pin SC70
(Top View)

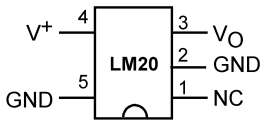

YZR Package
4-Pin DSBGA
(Top View)

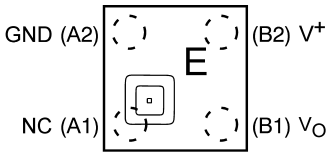

Pin Functions

PIN			TYPE	DESCRIPTION
NAME	DSBGA	SC70		
GND	—	2	GND	Device substrate and die attach paddle, connect to power supply negative terminal. For optimum thermal conductivity to the PC board ground plane, pin 2 must be grounded. This pin may also be left floating.
GND	A2	5	GND	Device ground pin, connect to power supply negative terminal.
NC	A1	1	—	NC (pin 1) must be left floating or grounded. Other signal traces must not be connected to this pin.
V_O	B1	3	Analog Output	Temperature sensor analog output
V^+	B2	4	Power	Positive power supply pin

6 Specifications

6.1 Absolute Maximum Ratings

over operating free-air temperature range (unless otherwise noted)(1)(2)

	MIN	MAX	UNIT
Supply Voltage	−0.2	6.5	V
Output Voltage	−0.6	(V^+ + 0.6)	V
Output Current		10	mA
Input Current at any pin(3)		5	mA
Maximum Junction Temperature (T_{JMAX})		150	°C
Storage temperature, T_{stg}	−65	150	°C

(1) Stresses beyond those listed under *Absolute Maximum Ratings* may cause permanent damage to the device. These are stress ratings only, which do not imply functional operation of the device at these or any other conditions beyond those indicated under *Recommended Operating Conditions*. Exposure to absolute-maximum-rated conditions for extended periods may affect device reliability.
(2) Soldering process must comply with TI's Reflow Temperature Profile specifications. Refer to http://www.ti.com/packaging.
(3) When the input voltage (V_I) at any pin exceeds power supplies (V_I < GND or V_I > V^+), the current at that pin should be limited to 5 mA.

Copyright © 1999–2015, Texas Instruments Incorporated

6.2 ESD Ratings

			VALUE	UNIT
$V_{(ESD)}$	Electrostatic discharge	Human-body model (HBM), per ANSI/ESDA/JEDEC JS-001 (1)	±2500	V
		Charged-device model (CDM), per JEDEC specification JESD22-C101 (2)	±250	

(1) JEDEC document JEP155 states that 500-V HBM allows safe manufacturing with a standard ESD control process.
(2) JEDEC document JEP157 states that 250-V CDM allows safe manufacturing with a standard ESD control process.

6.3 Recommended Operating Conditions

over operating free-air temperature range (unless otherwise noted) (1)

	MIN	MAX	UNIT
LM20B, LM20C with 2.4 V ≤ V^+ ≤ 2.7 V	−30	130	°C
LM20B, LM20C with 2.7 V ≤ V^+ ≤ 5.5 V	−55	130	°C
LM20S with 2.4 V ≤ V^+ ≤ 5.5 V	−30	125	°C
LM20S with 2.7 V ≤ V^+ ≤ 5.5 V	−40	125	°C
Supply Voltage Range (V^+)	2.4	5.5	V

(1) Stresses beyond those listed under *Absolute Maximum Ratings* may cause permanent damage to the device. These are stress ratings only, which do not imply functional operation of the device at these or any other conditions beyond those indicated under *Recommended Operating Conditions*. Exposure to absolute-maximum-rated conditions for extended periods may affect device reliability.

6.4 Thermal Information

THERMAL METRIC (1)		LM20		UNIT
		DCK (SC70)	YZR (DSBGA)	
		5 PINS	4 PINS	
$R_{\theta JA}$	Junction-to-ambient thermal resistance	282	197	°C/W
$R_{\theta JC(top)}$	Junction-to-case (top) thermal resistance	93	2	
$R_{\theta JB}$	Junction-to-board thermal resistance	62	40	
ψ_{JT}	Junction-to-top characterization parameter	1.6	11	
ψ_{JB}	Junction-to-board characterization parameter	62	40	
$R_{\theta JC(bot)}$	Junction-to-case (bottom) thermal resistance	—	—	

(1) For more information about traditional and new thermal metrics, see the *IC Package Thermal Metrics* application report, SPRA953.

6.5 Electrical Characteristics: LM20B

Unless otherwise noted, these specifications apply for V^+ = 2.7 V_{DC}. All limits T_A = T_J = T_{MIN} to T_{MAX}, unless otherwise noted.

PARAMETER	TEST CONDITIONS	MIN (1)	TYP (2)	MAX (1)	UNIT
Temperature to Voltage Error $V_O = (-3.88\times10^{-6}\times T^2) + (-1.15\times10^{-2}\times T) + 1.8639$ V (3)	T_A = 25°C to 30°C	–1.5		1.5	°C
	T_A = 130°C	–2.5		2.5	°C
	T_A = 125°C	–2.5		2.5	°C
	T_A = 100°C	–2.2		2.2	°C
	T_A = 85°C	–2.1		2.1	°C
	T_A = 80°C	–2.0		2.0	°C
	T_A = 0°C	–1.9		1.9	°C
	T_A = –30°C	–2.2		2.2	°C
	T_A = –40°C	–2.3		2.3	°C
	T_A = –55°C	–2.5		2.5	°C
Output Voltage at 0°C			1.8639		V
Variance from Curve			±1.0		°C

(1) Limits are ensured to TI's AOQL (Average Outgoing Quality Level).
(2) Typicals are at T_J = T_A = 25°C and represent most likely parametric norm.
(3) Accuracy is defined as the error between the measured and calculated output voltage at the specified conditions of voltage, current, and temperature (expressed in °C).

Copyright © 1999–2015, Texas Instruments Incorporated

Electrical Characteristics: LM20B (continued)

Unless otherwise noted, these specifications apply for V^+ = 2.7 V_{DC}. All limits T_A = T_J = T_{MIN} to T_{MAX}, unless otherwise noted.

PARAMETER	TEST CONDITIONS	MIN(1)	TYP(2)	MAX(1)	UNIT
Non-linearity(4)	–20°C ≤ T_A ≤ 80°C		±0.4%		
Sensor Gain (Temperature Sensitivity or Average Slope) to equation: V_O=−11.77 mV / °C×T+1.860 V	–30°C ≤ T_A ≤ 100°C	–12.2	–11.77	–11.4	mV/°C
Output Impedance	Sourcing I_L 0 µA to 16 µA(5)(6)			160	Ω
Load Regulation(7)	Sourcing I_L 0 µA to 16 µA(3)(6)			–2.5	mV
Line Regulation(8)	2.4 V ≤ V^+ ≤ 5.0 V			3.3	mV/V
	5.0 V ≤ V^+ ≤ 5.5 V			11	mV
Quiescent Current	2.4 V ≤ V^+ ≤ 5.0 V; T_A = 25°C		4.5	7	µA
	5.0 V ≤ V^+ ≤ 5.5 V; T_A = 25°C		4.5	9	µA
	2.4 V ≤ V^+ ≤ 5.0 V		4.5	10	µA
Change of Quiescent Current	2.4 V ≤ V^+ ≤ 5.5 V		0.7		µA
Temperature Coefficient of Quiescent Current			–11		nA/°C
Shutdown Current	V^+ ≤ 0.8 V		0.02		µA

(4) Non-linearity is defined as the deviation of the calculated output-voltage-versus-temperature curve from the best-fit straight line, over the temperature range specified.
(5) The LM20 can at most sink 1 µA and source 16 µA.
(6) Load regulation or output impedance specifications apply over the supply voltage range of 2.4 V to 5.5 V.
(7) Regulation is measured at constant junction temperature, using pulse testing with a low duty cycle. Changes in output due to heating effects can be computed by multiplying the internal dissipation by the thermal resistance.
(8) Line regulation is calculated by subtracting the output voltage at the highest supply input voltage from the output voltage at the lowest supply input voltage.

6.6 Electrical Characteristics: LM20C

Unless otherwise noted, these specifications apply for V^+ = 2.7 V_{DC}. All limits T_A = T_J = T_{MIN} to T_{MAX}, unless otherwise noted.

PARAMETER	TEST CONDITIONS	MIN(1)	TYP(2)	MAX(1)	UNIT
Temperature to Voltage Error $V_O = (-3.88\times10^{-6}\times T^2) + (-1.15\times10^{-2}\times T) + 1.8639$ V(3)	T_A = 25°C to 30°C	–4		5	°C
	T_A = 130°C	–5		5	°C
	T_A = 125°C	–5		5	°C
	T_A = 100°C	–4.7		4.7	°C
	T_A = 85°C	–4.6		4.6	°C
	T_A = 80°C	–4.5		4.5	°C
	T_A = 0°C	–4.4		4.4	°C
	T_A = –30°C	–4.7		4.7	°C
	T_A = –40°C	–4.8		4.8	°C
	T_A = –55°C	–5.0		5.0	°C
Output Voltage at 0°C			1.8639		V
Variance from Curve			±1.0		°C
Non-Linearity (4)	–20°C ≤ T_A ≤ 80°C		±0.4%		
Sensor Gain (Temperature Sensitivity or Average Slope) to equation: V_O=−11.77 mV / °C×T+1.860 V	–30°C ≤ T_A ≤ 100°C	–12.6	–11.77	–11.0	mV/°C
Output Impedance	Sourcing I_L 0 µA to 16 µA (5)(6)			160	Ω

(1) Limits are ensured to TI's AOQL (Average Outgoing Quality Level).
(2) Typicals are at T_J = T_A = 25°C and represent most likely parametric norm.
(3) Accuracy is defined as the error between the measured and calculated output voltage at the specified conditions of voltage, current, and temperature (expressed in °C).
(4) Non-linearity is defined as the deviation of the calculated output-voltage-versus-temperature curve from the best-fit straight line, over the temperature range specified.
(5) The LM20 can at most sink 1 µA and source 16 µA.
(6) Load regulation or output impedance specifications apply over the supply voltage range of 2.4 V to 5.5 V.

Copyright © 1999–2015, Texas Instruments Incorporated

Electrical Characteristics: LM20C (continued)

Unless otherwise noted, these specifications apply for $V^+ = 2.7\ V_{DC}$. All limits $T_A = T_J = T_{MIN}$ to T_{MAX}, unless otherwise noted.

PARAMETER	TEST CONDITIONS	MIN(1)	TYP(2)	MAX(1)	UNIT
Load Regulation(7)	Sourcing I_L 0 µA to 16 µA (5)(6)			–2.5	mV
Line Regulation(8)	2.4 V ≤ V^+ ≤ 5.0 V			3.7	mV/V
	5.0 V ≤ V^+ ≤ 5.5 V			11	mV
Quiescent Current	2.4 V ≤ V^+ ≤ 5.0 V; T_A = 25°C		4.5	7	µA
	5.0 V ≤ V^+ ≤ 5.5 V; T_A = 25°C		4.5	9	µA
	2.4 V ≤ V^+ ≤ 5.0 V		4.5	10	µA
Change of Quiescent Current	2.4 V ≤ V^+ ≤ 5.5 V		0.7		µA
Temperature Coefficient of Quiescent Current			–11		nA/°C
Shutdown Current	V^+ ≤ 0.8 V		0.02		µA

(7) Regulation is measured at constant junction temperature, using pulse testing with a low duty cycle. Changes in output due to heating effects can be computed by multiplying the internal dissipation by the thermal resistance.
(8) Line regulation is calculated by subtracting the output voltage at the highest supply input voltage from the output voltage at the lowest supply input voltage.

6.7 Electrical Characteristics: LM20S

Unless otherwise noted, these specifications apply for $V^+ = 2.7\ V_{DC}$. All limits $T_A = T_J = T_{MIN}$ to T_{MAX}, unless otherwise noted.

PARAMETER	TEST CONDITIONS	MIN(1)	TYP(2)	MAX(1)	UNIT
Temperature to Voltage Error $V_O = (-3.88\times10^{-6}\times T^2) + (-1.15\times10^{-2}\times T) + 1.8639\ V$(3)	T_A = 25°C to 30°C	–2.5	±1.5	2.5	°C
	T_A = 125°C	–3.5		3.5	°C
	T_A = 100°C	–3.2		3.2	°C
	T_A = 85°C	–3.1		3.1	°C
	T_A = 80°C	–3.0		3.0	°C
	T_A = 0°C	–2.9		2.9	°C
	T_A = –30°C	–3.3		3.3	°C
	T_A = –40°C	–3.5		3.5	°C
Output Voltage at 0°C			1.8639		V
Variance from Curve			±1.0		°C
Non-Linearity (4)	–20°C ≤ T_A ≤ 80°C		±0.4%		
Sensor Gain (Temperature Sensitivity or Average Slope) to equation: V_O= −11.77 mV/ °C × T + 1.860 V	–30°C ≤ T_A ≤ 100°C	–12.6	–11.77	–11.0	mV/°C
Output Impedance	Sourcing I_L 0 µA to 16 µA(5)(6)			160	Ω
Load Regulation(7)	Sourcing I_L 0 µA to 16 µA(5)(6)			–2.5	mV
Line Regulation(8)	2.4 V ≤ V^+ ≤ 5.0 V			3.7	mV/V
	5.0 V ≤ V^+ ≤ 5.5 V			11	mV
Quiescent Current	2.4 V ≤ V^+ ≤ 5.0 V; T_A = 25°C		4.5	7	µA
	5.0 V ≤ V^+ ≤ 5.5 V; T_A = 25°C		4.5	9	µA
	2.4 V ≤ V^+ ≤ 5.0 V		4.5	10	µA

(1) Limits are ensured to TI's AOQL (Average Outgoing Quality Level).
(2) Typicals are at $T_J = T_A$ = 25°C and represent most likely parametric norm.
(3) Accuracy is defined as the error between the measured and calculated output voltage at the specified conditions of voltage, current, and temperature (expressed in °C).
(4) Non-linearity is defined as the deviation of the calculated output-voltage-versus-temperature curve from the best-fit straight line, over the temperature range specified.
(5) The LM20 can at most sink 1 µA and source 16 µA.
(6) Load regulation or output impedance specifications apply over the supply voltage range of 2.4 V to 5.5 V.
(7) Regulation is measured at constant junction temperature, using pulse testing with a low duty cycle. Changes in output due to heating effects can be computed by multiplying the internal dissipation by the thermal resistance.
(8) Line regulation is calculated by subtracting the output voltage at the highest supply input voltage from the output voltage at the lowest supply input voltage.

Copyright © 1999–2015, Texas Instruments Incorporated

Electrical Characteristics: LM20S (continued)

Unless otherwise noted, these specifications apply for V^+ = 2.7 V_{DC}. All limits $T_A = T_J = T_{MIN}$ to T_{MAX}, unless otherwise noted.

PARAMETER	TEST CONDITIONS	MIN(1)	TYP(2)	MAX(1)	UNIT
Change of Quiescent Current	2.4 V ≤ V^+ ≤ 5.5 V		0.7		µA
Temperature Coefficient of Quiescent Current			–11		nA/°C
Shutdown Current	V^+ ≤ 0.8 V		0.02		µA

6.8 Typical Characteristics

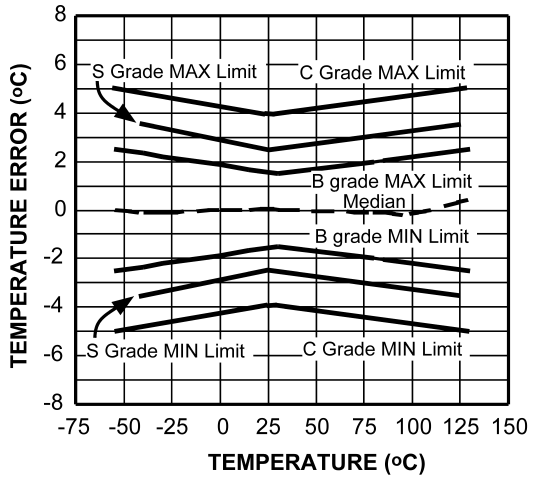

Figure 1. Temperature Error vs Temperature

Copyright © 1999–2015, Texas Instruments Incorporated

7 Detailed Description

7.1 Overview

The LM20 device is a precision analog output CMOS integrated-circuit temperature sensor that operates over a temperature range of −55°C to 130°C. The power supply operating range is 2.4 V to 5.5 V. The transfer function of LM20 is predominately linear, yet has a slight predictable parabolic curvature. The accuracy of the LM20 when specified to a parabolic transfer function is typically ±1.5°C at an ambient temperature of 30°C. The temperature error increases linearly and reaches a maximum of ±2.5°C at the temperature range extremes for the LM20. The temperature range is affected by the power supply voltage. At a power supply voltage of 2.7 V to 5.5 V, the temperature range extremes are 130°C and −55°C. Decreasing the power supply voltage to 2.4 V changes the negative extreme to −30°C, while the positive remains at 130°C.

The LM20 quiescent current is less than 10 µA. Therefore, self-heating is less than 0.02°C in still air. Shutdown capability for the LM20 is intrinsic because its inherent low power consumption allows it to be powered directly from the output of many logic gates or, does not necessitate shutdown at all.

The temperature sensing element is comprised of a simple base emitter junction that is forward biased by a current source. The temperature sensing element is then buffered by an amplifier and provided to the OUT pin. The amplifier has a simple class A output stage thus providing a low impedance output that can source 16 µA and sink 1 µA.

7.2 Functional Block Diagram

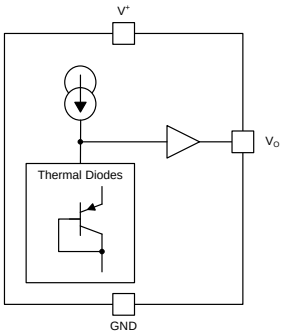

7.3 Feature Description

7.3.1 LM20 Transfer Function

The LM20 transfer function can be described in different ways with varying levels of precision. A simple linear transfer function with good accuracy near 25°C is:

$$V_O = -11.69\ mV/°C \times T + 1.8663\ V \quad (1)$$

Over the full operating temperature range of −55°C to 130°C, best accuracy can be obtained by using the parabolic transfer function.

$$V_O = (-3.88\times10^{-6}\times T^2) + (-1.15\times10^{-2}\times T) + 1.8639 \quad (2)$$

Using Equation 2, the following temperature to voltage output characteristic table can be generated.

Table 1. Temperature to Voltage Output Characteristic Table

TEMP (°C)	VOUT (V)	TEMP (°C)	VOUT (V)	TEMP (°C)	VOUT (V)	TEMP (°C)	VOUT (V)	TEMP (°C)	VOUT (V)	TEMP (°C)	VOUT (V)	TEMP (°C)	VOUT (V)
-55	2.4847	-28	2.1829	-1	1.8754	26	1.5623	53	1.2435	80	0.9191	107	0.5890
-54	2.4736	-27	2.1716	0	1.8639	27	1.5506	54	1.2316	81	0.9069	108	0.5766
-53	2.4625	-26	2.1603	1	1.8524	28	1.5389	55	1.2197	82	0.8948	109	0.5643
-52	2.4514	-25	2.1490	2	1.8409	29	1.5271	56	1.2077	83	0.8827	110	0.5520
-51	2.4403	-24	2.1377	3	1.8294	30	1.5154	57	1.1958	84	0.8705	111	0.5396
-50	2.4292	-23	2.1263	4	1.8178	31	1.5037	58	1.1838	85	0.8584	112	0.5272

Copyright © 1999–2015, Texas Instruments Incorporated

Feature Description (continued)

Table 1. Temperature to Voltage Output Characteristic Table (continued)

TEMP (°C)	VOUT (V)	TEMP (°C)	VOUT (V)	TEMP (°C)	VOUT (V)	TEMP (°C)	VOUT (V)	TEMP (°C)	VOUT (V)	TEMP (°C)	VOUT (V)	TEMP (°C)	VOUT (V)
-49	2.4181	-22	2.1150	5	1.8063	32	1.4919	59	1.1719	86	0.8462	113	0.5149
-48	2.4070	-21	2.1037	6	1.7948	33	1.4802	60	1.1599	87	0.8340	114	0.5025
-47	2.3958	-20	2.0923	7	1.7832	34	1.4684	61	1.1480	88	0.8219	115	0.4901
-46	2.3847	-19	2.0810	8	1.7717	35	1.4566	62	1.1360	89	0.8097	116	0.4777
-45	2.3735	-18	2.0696	9	1.7601	36	1.4449	63	1.1240	90	0.7975	117	0.4653
-44	2.3624	-17	2.0583	10	1.7485	37	1.4331	64	1.1120	91	0.7853	118	0.4529
-43	2.3512	-16	2.0469	11	1.7369	38	1.4213	65	1.1000	92	0.7731	119	0.4405
-42	2.3401	-15	2.0355	12	1.7253	39	1.4095	66	1.0880	93	0.7608	120	0.4280
-41	2.3289	-14	2.0241	13	1.7137	40	1.3977	67	1.0760	94	0.7486	121	0.4156
-40	2.3177	-13	2.0127	14	1.7021	41	1.3859	68	1.0640	95	0.7364	122	0.4032
-39	2.3065	-12	2.0013	15	1.6905	42	1.3741	69	1.0519	96	0.7241	123	0.3907
-38	2.2953	-11	1.9899	16	1.6789	43	1.3622	70	1.0399	97	0.7119	124	0.3782
-37	2.2841	-10	1.9785	17	1.6673	44	1.3504	71	1.0278	98	0.6996	125	0.3658
-36	2.2729	-9	1.9671	18	1.6556	45	1.3385	72	1.0158	99	0.6874	126	0.3533
-35	2.2616	-8	1.9557	19	1.6440	46	1.3267	73	1.0037	100	0.6751	127	0.3408
-34	2.2504	-7	1.9442	20	1.6323	47	1.3148	74	0.9917	101	0.6628	128	0.3283
-33	2.2392	-6	1.9328	21	1.6207	48	1.3030	75	0.9796	102	0.6505	129	0.3158
-32	2.2279	-5	1.9213	22	1.6090	49	1.2911	76	0.9675	103	0.6382	130	0.3033
-31	2.2167	-4	1.9098	23	1.5973	50	1.2792	77	0.9554	104	0.6259	—	—
-30	2.2054	-3	1.8984	24	1.5857	51	1.2673	78	0.9433	105	0.6136	—	—
-29	2.1941	-2	1.8869	25	1.5740	52	1.2554	79	0.9312	106	0.6013	—	—

Solving Equation 2 for T:

$$T = -1481.96 + \sqrt{2.1962 \times 10^{6} + \frac{(1.8639 - V_O)}{3.88 \times 10^{-6}}} \quad (3)$$

7.4 Device Functional Modes

The only functional mode of the LM20 is that it has an analog output inversely proportional to temperature.

Copyright © 1999–2015, Texas Instruments Incorporated

8 Application and Implementation

NOTE

Information in the following applications sections is not part of the TI component specification, and TI does not warrant its accuracy or completeness. TI's customers are responsible for determining suitability of components for their purposes. Customers should validate and test their design implementation to confirm system functionality.

8.1 Application Information

The LM20 features make it suitable for many general temperature sensing applications. Multiple package options expand on its, flexibility.

8.1.1 Capacitive Loads

The LM20 handles capacitive loading well. Without any precautions, the LM20 can drive any capacitive load less than 300 pF as shown in Figure 2. Over the specified temperature range the LM20 has a maximum output impedance of 160 Ω. In an extremely noisy environment, it may be necessary to add some filtering to minimize noise pickup. It is recommended that 0.1 µF be added from V^+ to GND to bypass the power supply voltage, as shown in Figure 4. In a noisy environment, it may even be necessary to add a capacitor from the output to ground with a series resistor as shown in Figure 4. A 1-µF output capacitor with the 160-Ω maximum output impedance and a 200-Ω series resistor will form a 442-Hz lowpass filter. Because the thermal time constant of the LM20 is much slower, the overall response time of the LM20 will not be significantly affected.

In situations where a transient load current is placed on the circuit output the series resistance value may be increased to compensate for any ringing that may be observed.

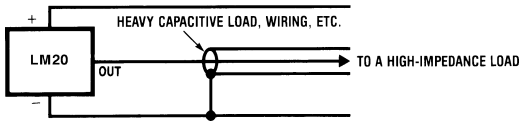

Figure 2. LM20 No Decoupling Required for Capacitive Loads Less Than 300 pF

Table 2. Capacitive Loading Isolation

Minimum R (Ω)	C (µF)
200	1
470	0.1
680	0.01
1 k	0.001

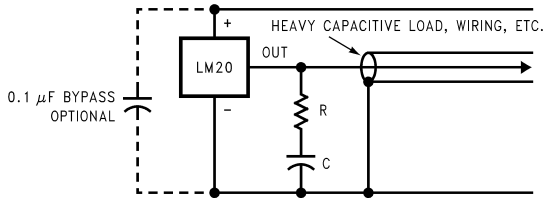

Figure 3. LM20 With Compensation for Capacitive Loading Greater Than 300 pF

Copyright © 1999–2015, Texas Instruments Incorporated

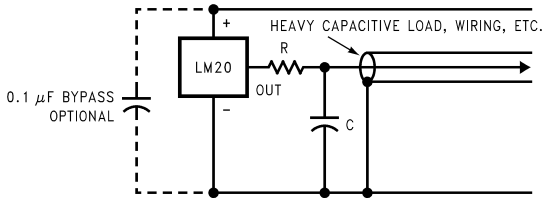

Figure 4. LM20 With Filter for Noisy Environment and Capacitive Loading Greater Than 300 pF

NOTE

Either placement of resistor, as shown in Figure 3 and Figure 4, is just as effective.

8.1.2 LM20 DSBGA Light Sensitivity

Exposing the LM20 DSBGA package to bright sunlight may cause the output reading of the LM20 to drop by 1.5 V. In a normal office environment of fluorescent lighting the output voltage is minimally affected (less than a millivolt drop). In either case, TI recommends that the LM20 DSBGA be placed inside an enclosure of some type that minimizes its light exposure. Most chassis provide more than ample protection. The LM20 does not sustain permanent damage from light exposure. Removing the light source will cause the output voltage of the LM20 to recover to the proper value.

8.2 Typical Applications

8.2.1 Full-Range Celsius (Centigrade) Temperature Sensor (−55°C to 130°C) Operating from a Single Li-Ion Battery Cell

The LM20 has a very low supply current and a wide supply range; therefore, it can easily be driven by a battery as shown in Figure 5.

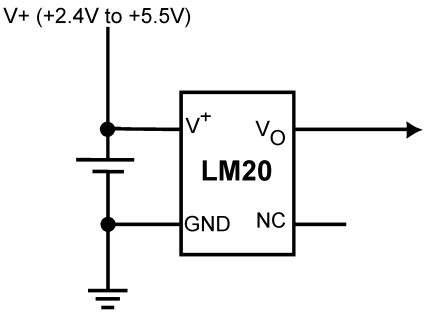

Figure 5. Full-Range Celsius (Centigrade) Temperature Sensor (−55°C To 130°C) Operating from a Single Li-Ion Battery Cell

8.2.1.1 Design Requirements

Because the LM20 is a simple temperature sensor that provides an analog output, design requirements related to layout are more important than electrical requirements. Refer to the *Layout* section for a detailed description.

8.2.1.2 Detailed Design Procedure

The LM20 transfer function can be described in different ways with varying levels of precision. A simple linear transfer function with good accuracy near 25°C is:

$$V_O = -11.69\ mV/°C \times T + 1.8663\ V \quad (4)$$

Over the full operating temperature range of −55°C to 130°C, best accuracy can be obtained by using the parabolic transfer function.

$$V_O = (-3.88\times10^{-6}\times T^2) + (-1.15\times10^{-2}\times T) + 1.8639 \quad (5)$$

Solving Equation 5 for T:

Typical Applications (continued)

$$T = -1481.96 + \sqrt{2.1962 \times 10^{6} + \frac{(1.8639 - V_O)}{3.88 \times 10^{-6}}} \quad (6)$$

An alternative to the quadratic equation a second order transfer function can be determined using the least-squares method:

$$T = (-2.3654 \times V_O^{\ 2}) + (-78.154 \times V_O) + 153.857 \quad (7)$$

where

- T is temperature express in °C and V_O is the output voltage expressed in volts.

A linear transfer function can be used over a limited temperature range by calculating a slope and offset that give best results over that range. A linear transfer function can be calculated from the parabolic transfer function of the LM20. The slope of the linear transfer function can be calculated using the Equation 8 equation:

$$m = -7.76 \times 10^{-6} \times T - 0.0115, \quad (8)$$

where

- T is the middle of the temperature range of interest and m is in V/°C.

For example for the temperature range of T_{MIN} = −30 to T_{MAX} = 100°C:

$$T = 35°C \quad (9)$$

and

$$m = -11.77 \text{ mV/°C} \quad (10)$$

The offset of the linear transfer function can be calculated using the Equation 11 equation:

$$b = (V_{OP}(T_{MAX}) + V_{OP}(T) - m \times (T_{MAX}+T))/2 \quad (11)$$

where

- $V_{OP}(T_{MAX})$ is the calculated output voltage at T_{MAX} using the parabolic transfer function for V_O
- $V_{OP}(T)$ is the calculated output voltage at T using the parabolic transfer function for V_O.

The best fit linear transfer function for many popular temperature ranges was calculated in Table 3. As shown in Table 3, the error introduced by the linear transfer function increases with wider temperature ranges.

Table 3. First Order Equations Optimized for Different Temperature Ranges

Temperature Range		Linear Equation	Maximum Deviation of Linear Equation from Parabolic Equation (°C)
T_{min} (°C)	T_{max} (°C)		
−55	130	V_O = −11.79 mV/°C × T + 1.8528 V	±1.41
−40	110	V_O = −11.77 mV/°C × T + 1.8577 V	±0.93
−30	100	V_O = −11.77 mV/°C × T + 1.8605 V	±0.70
-40	85	V_O = −11.67 mV/°C × T + 1.8583 V	±0.65
−10	65	V_O = −11.71 mV/°C × T + 1.8641 V	±0.23
35	45	V_O = −11.81 mV/°C × T + 1.8701 V	±0.004
20	30	V_O = –11.69 mV/°C × T + 1.8663 V	±0.004

Copyright © 1999–2015, Texas Instruments Incorporated

Table 4. Output Voltage vs Temperature

Temperature (T)	Typical V_O
130°C	303 mV
100°C	675 mV
80°C	919 mV
30°C	1515 mV
25°C	1574 mV
0°C	1863.9 mV
–30°C	2205 mV
−40°C	2318 mV
−55°C	2485 mV

8.2.1.3 Application Curve

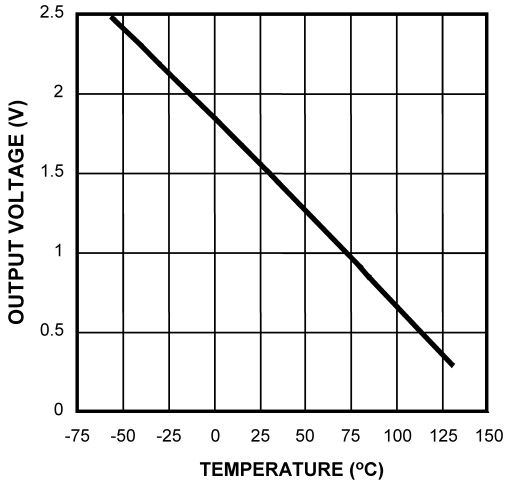

Figure 6. Output Voltage vs Temperature

8.2.2 Centigrade Thermostat

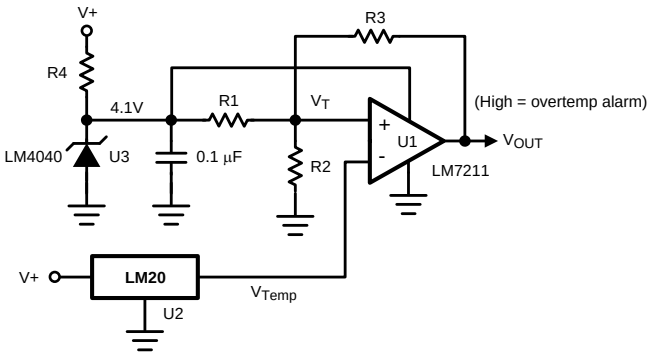

Figure 7. Centigrade Thermostat

8.2.2.1 Design Requirements

A simple thermostat can be created by using a reference (LM4040) and a comparator (LM7211) as shown in Figure 7.

8.2.2.2 Detailed Design Procedure

The threshold values can be calculated using Equation 12 and Equation 13.

$$V_{T1} = \frac{(4.1)R2}{R2 + R1||R3} \quad (12)$$

$$V_{T2} = \frac{(4.1)R2||R3}{R1 + R2||R3} \quad (13)$$

8.2.2.3 Application Curve

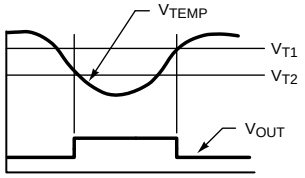

Figure 8. Thermostat Output Waveform

8.3 System Examples

8.3.1 Conserving Power Dissipation With Shutdown

The LM20 draws very little power; therefore, it can simply be shutdown by driving its supply pin with the output of an logic gate as shown in Figure 9.

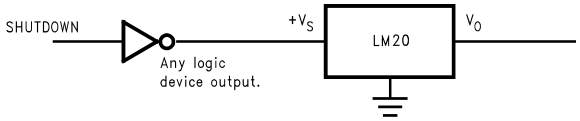

Figure 9. Conserving Power Dissipation With Shutdown

8.3.2 Analog-to-Digital Converter Input Stage

Most CMOS ADCs found in ASICs have a sampled data comparator input structure that is notorious for causing grief to analog output devices such as the LM20 and many operational amplifiers. The cause of this grief is the requirement of instantaneous charge of the input sampling capacitor in the ADC. This requirement is easily accommodated by the addition of a capacitor. Because not all ADCsFigure 10 have identical input stages, the charge requirements will vary necessitating a different value of compensating capacitor. This ADC is shown as an example only. If a digital output temperature is required, refer to devices such as the LM74.

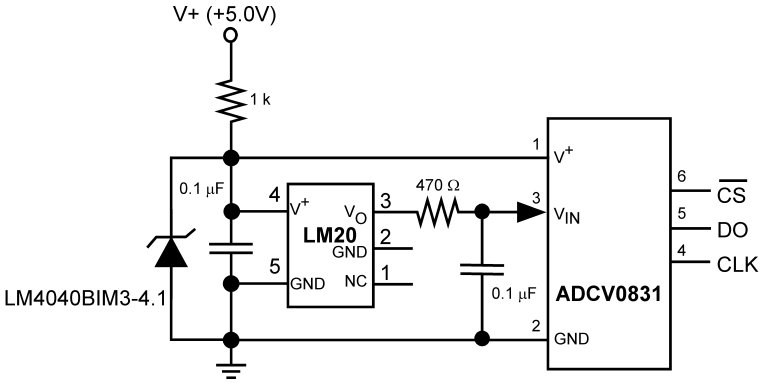

Figure 10. Suggested Connection to a Sampling Analog to Digital Converter Input Stage

Copyright © 1999–2015, Texas Instruments Incorporated

9 Power Supply Recommendations

The LM20 has a very wide 2.4-V to 5.5-V power supply voltage range that makes ideal for many applications. In noisy environments, TI recommends adding at minimum 0.1 µF from V+ to GND to bypass the power supply voltage. Larger capacitances maybe required and are dependent on the power-supply noise.

10 Layout

10.1 Layout Guidelines

The LM20 can be easily applied in the same way as other integrated-circuit temperature sensors. It can be glued or cemented to a surface. The temperature that the LM20 is sensing is within approximately 0.02°C of the surface temperature to which the leads of the LM20 are attached.

Implementing the integrated-circuit temperature sensors presumes that the ambient air temperature is almost the same as the surface temperature; if the air temperature were much higher or lower than the surface temperature, the actual temperature measured would be at an intermediate temperature between the surface temperature and the air temperature.

To ensure good thermal conductivity, the backside of the LM20 die is directly attached to the pin 2 GND. The temperatures of the lands and traces to the other leads of the LM20 will also affect the temperature that is sensed.

Alternatively, the LM20 can be mounted inside a sealed-end metal tube, and can then be dipped into a bath or screwed into a threaded hole in a tank. As with any IC, the LM20 and accompanying wiring and circuits must be kept insulated and dry, to avoid leakage and corrosion. This is especially true if the circuit may operate at cold temperatures where condensation can occur. Printed-circuit coatings and varnishes such as a conformal coating and epoxy paints or dips are often used to ensure that moisture cannot corrode the LM20 or its connections.

10.2 Layout Examples

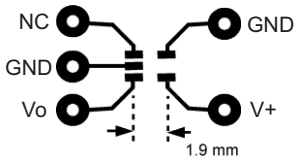

Figure 11. Layout Used for No Heat Sink Measurements

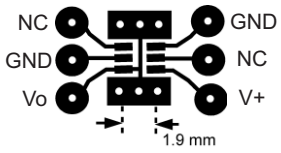

Figure 12. Layout Used for Measurements With Small Heat Sink

10.3 Thermal Considerations

The thermal resistance junction to ambient ($R_{\theta JA}$) is the parameter used to calculate the rise of a device junction temperature due to its power dissipation. For the LM20, the equation used to calculate the rise in the die temperature is as follows:

$$T_J = T_A + R_{\theta JA} [(V^+ I_Q) + (V^+ - V_O) I_L] \quad (14)$$

where

- I_Q is the quiescent current and I_L is the load current on the output. Because the junction temperature of LM20 is the actual temperature being measured, take care to minimize the load current that the LM20 is required to drive.

Thermal Considerations (continued)

Table 5 summarizes the rise in die temperature of the LM20 without any loading and the thermal resistance for different conditions.

Table 5. Temperature Rise of LM20 Due to Self-Heating and Thermal Resistance ($R_{\Theta JA}$)
See more *Layout Examples*

	SC70-5		SC70-5	
	No Heat Sink		Small Heat Sink	
	$R_{\theta JA}$ (°C/W)	$T_J - T_A$ (°C)	$R_{\theta JA}$ (°C/W)	$T_J - T_A$ (°C)
Still air	412	0.2	350	0.19
Moving air	312	0.17	266	0.15

	DSBGA	
	No Heat Sink	
	$R_{\theta JA}$ (°C/W)	$T_J - T_A$ (°C)
Still air	340	0.18

Copyright © 1999–2015, Texas Instruments Incorporated

11 Device and Documentation Support

11.1 Trademarks

All trademarks are the property of their respective owners.

11.2 Electrostatic Discharge Caution



These devices have limited built-in ESD protection. The leads should be shorted together or the device placed in conductive foam during storage or handling to prevent electrostatic damage to the MOS gates.

11.3 Glossary

SLYZ022 — *TI Glossary*.

This glossary lists and explains terms, acronyms, and definitions.

12 Mechanical, Packaging, and Orderable Information

The following pages include mechanical, packaging, and orderable information. This information is the most current data available for the designated devices. This data is subject to change without notice and revision of this document. For browser-based versions of this data sheet, refer to the left-hand navigation.

Copyright © 1999–2015, Texas Instruments Incorporated

PACKAGING INFORMATION

Orderable Device	Status (1)	Package Type	Package Drawing	Pins	Package Qty	Eco Plan (2)	Lead finish/ Ball material (6)	MSL Peak Temp (3)	Op Temp (°C)	Device Marking (4/5)	Samples
LM20BIM7	NRND	SC70	DCK	5	1000	Non-RoHS & Green	Call TI	Level-1-260C-UNLIM	-55 to 130	T2B	
LM20BIM7/NOPB	ACTIVE	SC70	DCK	5	1000	RoHS & Green	SN	Level-1-260C-UNLIM	-55 to 130	T2B	Samples
LM20BIM7X	NRND	SC70	DCK	5	3000	Non-RoHS & Green	Call TI	Level-1-260C-UNLIM	-55 to 130	T2B	
LM20BIM7X/NOPB	ACTIVE	SC70	DCK	5	3000	RoHS & Green	SN	Level-1-260C-UNLIM	-55 to 130	T2B	Samples
LM20CIM7/NOPB	ACTIVE	SC70	DCK	5	1000	RoHS & Green	SN	Level-1-260C-UNLIM	-55 to 130	T2C	Samples
LM20CIM7X	NRND	SC70	DCK	5	3000	Non-RoHS & Green	Call TI	Level-1-260C-UNLIM	-55 to 130	T2C	
LM20CIM7X/NOPB	ACTIVE	SC70	DCK	5	3000	RoHS & Green	SN	Level-1-260C-UNLIM	-55 to 130	T2C	Samples
LM20SITL/NOPB	ACTIVE	DSBGA	YZR	4	250	RoHS & Green	SNAGCU	Level-1-260C-UNLIM	-40 to 125		Samples
LM20SITLX/NOPB	ACTIVE	DSBGA	YZR	4	3000	RoHS & Green	SNAGCU	Level-1-260C-UNLIM	-40 to 125		Samples

(1) The marketing status values are defined as follows:
ACTIVE: Product device recommended for new designs.
LIFEBUY: TI has announced that the device will be discontinued, and a lifetime-buy period is in effect.
NRND: Not recommended for new designs. Device is in production to support existing customers, but TI does not recommend using this part in a new design.
PREVIEW: Device has been announced but is not in production. Samples may or may not be available.
OBSOLETE: TI has discontinued the production of the device.

(2) **RoHS:** TI defines "RoHS" to mean semiconductor products that are compliant with the current EU RoHS requirements for all 10 RoHS substances, including the requirement that RoHS substance do not exceed 0.1% by weight in homogeneous materials. Where designed to be soldered at high temperatures, "RoHS" products are suitable for use in specified lead-free processes. TI may reference these types of products as "Pb-Free".
RoHS Exempt: TI defines "RoHS Exempt" to mean products that contain lead but are compliant with EU RoHS pursuant to a specific EU RoHS exemption.
Green: TI defines "Green" to mean the content of Chlorine (Cl) and Bromine (Br) based flame retardants meet JS709B low halogen requirements of <=1000ppm threshold. Antimony trioxide based flame retardants must also meet the <=1000ppm threshold requirement.

(3) MSL, Peak Temp. - The Moisture Sensitivity Level rating according to the JEDEC industry standard classifications, and peak solder temperature.

(4) There may be additional marking, which relates to the logo, the lot trace code information, or the environmental category on the device.

(5) Multiple Device Markings will be inside parentheses. Only one Device Marking contained in parentheses and separated by a "~" will appear on a device. If a line is indented then it is a continuation of the previous line and the two combined represent the entire Device Marking for that device.

(6) Lead finish/Ball material - Orderable Devices may have multiple material finish options. Finish options are separated by a vertical ruled line. Lead finish/Ball material values may wrap to two lines if the finish value exceeds the maximum column width.

Important Information and Disclaimer: The information provided on this page represents TI's knowledge and belief as of the date that it is provided. TI bases its knowledge and belief on information provided by third parties, and makes no representation or warranty as to the accuracy of such information. Efforts are underway to better integrate information from third parties. TI has taken and continues to take reasonable steps to provide representative and accurate information but may not have conducted destructive testing or chemical analysis on incoming materials and chemicals. TI and TI suppliers consider certain information to be proprietary, and thus CAS numbers and other limited information may not be available for release.

In no event shall TI's liability arising out of such information exceed the total purchase price of the TI part(s) at issue in this document sold by TI to Customer on an annual basis.

TAPE AND REEL INFORMATION

REEL DIMENSIONS

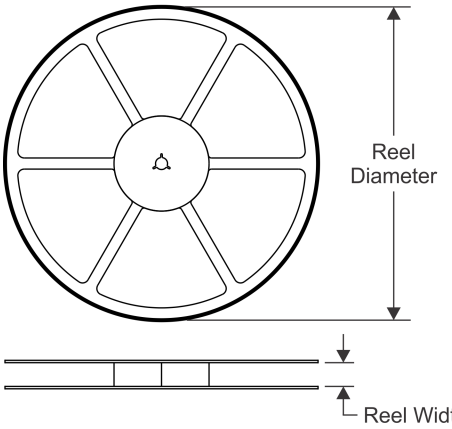

TAPE DIMENSIONS

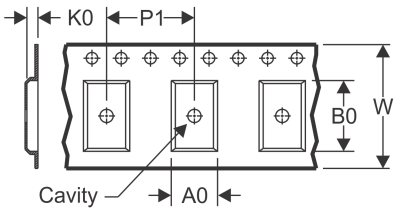

A0	Dimension designed to accommodate the component width
B0	Dimension designed to accommodate the component length
K0	Dimension designed to accommodate the component thickness
W	Overall width of the carrier tape
P1	Pitch between successive cavity centers

QUADRANT ASSIGNMENTS FOR PIN 1 ORIENTATION IN TAPE

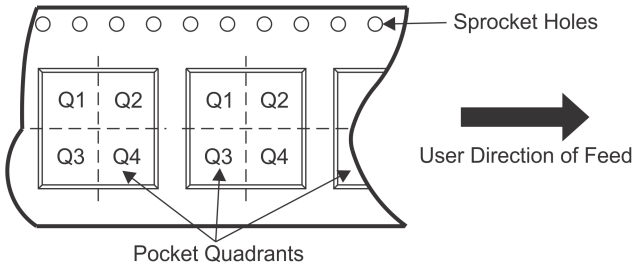

*All dimensions are nominal

Device	Package Type	Package Drawing	Pins	SPQ	Reel Diameter (mm)	Reel Width W1 (mm)	A0 (mm)	B0 (mm)	K0 (mm)	P1 (mm)	W (mm)	Pin1 Quadrant
LM20BIM7	SC70	DCK	5	1000	178.0	8.4	2.25	2.45	1.2	4.0	8.0	Q3
LM20BIM7/NOPB	SC70	DCK	5	1000	178.0	8.4	2.25	2.45	1.2	4.0	8.0	Q3
LM20BIM7X	SC70	DCK	5	3000	178.0	8.4	2.25	2.45	1.2	4.0	8.0	Q3
LM20BIM7X/NOPB	SC70	DCK	5	3000	178.0	8.4	2.25	2.45	1.2	4.0	8.0	Q3
LM20CIM7/NOPB	SC70	DCK	5	1000	178.0	8.4	2.25	2.45	1.2	4.0	8.0	Q3
LM20CIM7X	SC70	DCK	5	3000	178.0	8.4	2.25	2.45	1.2	4.0	8.0	Q3
LM20CIM7X/NOPB	SC70	DCK	5	3000	178.0	8.4	2.25	2.45	1.2	4.0	8.0	Q3
LM20SITL/NOPB	DSBGA	YZR	4	250	178.0	8.4	1.04	1.04	0.76	4.0	8.0	Q1
LM20SITLX/NOPB	DSBGA	YZR	4	3000	178.0	8.4	1.04	1.04	0.76	4.0	8.0	Q1

TAPE AND REEL BOX DIMENSIONS

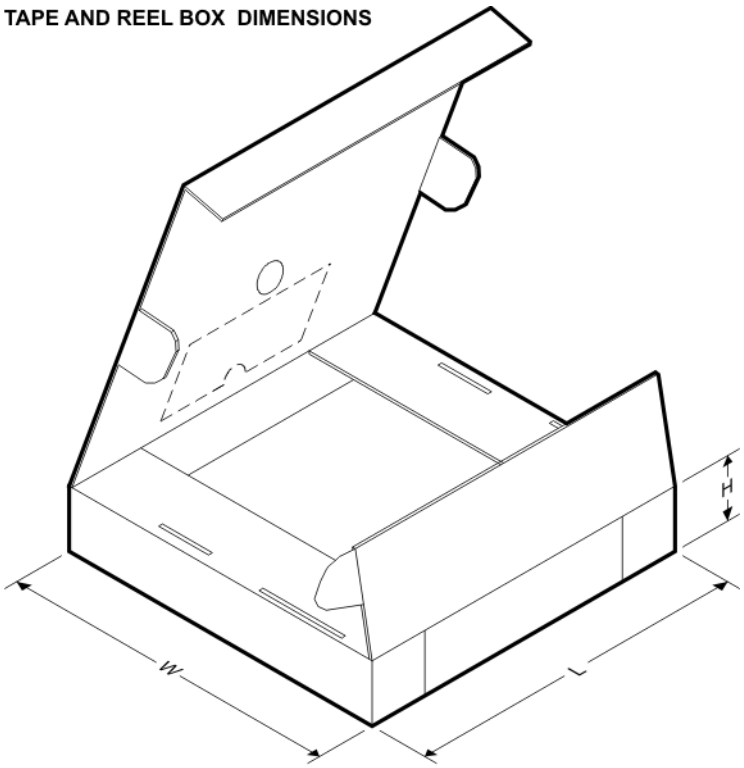

*All dimensions are nominal

Device	Package Type	Package Drawing	Pins	SPQ	Length (mm)	Width (mm)	Height (mm)
LM20BIM7	SC70	DCK	5	1000	210.0	185.0	35.0
LM20BIM7/NOPB	SC70	DCK	5	1000	210.0	185.0	35.0
LM20BIM7X	SC70	DCK	5	3000	210.0	185.0	35.0
LM20BIM7X/NOPB	SC70	DCK	5	3000	210.0	185.0	35.0
LM20CIM7/NOPB	SC70	DCK	5	1000	210.0	185.0	35.0
LM20CIM7X	SC70	DCK	5	3000	210.0	185.0	35.0
LM20CIM7X/NOPB	SC70	DCK	5	3000	210.0	185.0	35.0
LM20SITL/NOPB	DSBGA	YZR	4	250	210.0	185.0	35.0
LM20SITLX/NOPB	DSBGA	YZR	4	3000	210.0	185.0	35.0

DCK (R–PDSO–G5) PLASTIC SMALL–OUTLINE PACKAGE

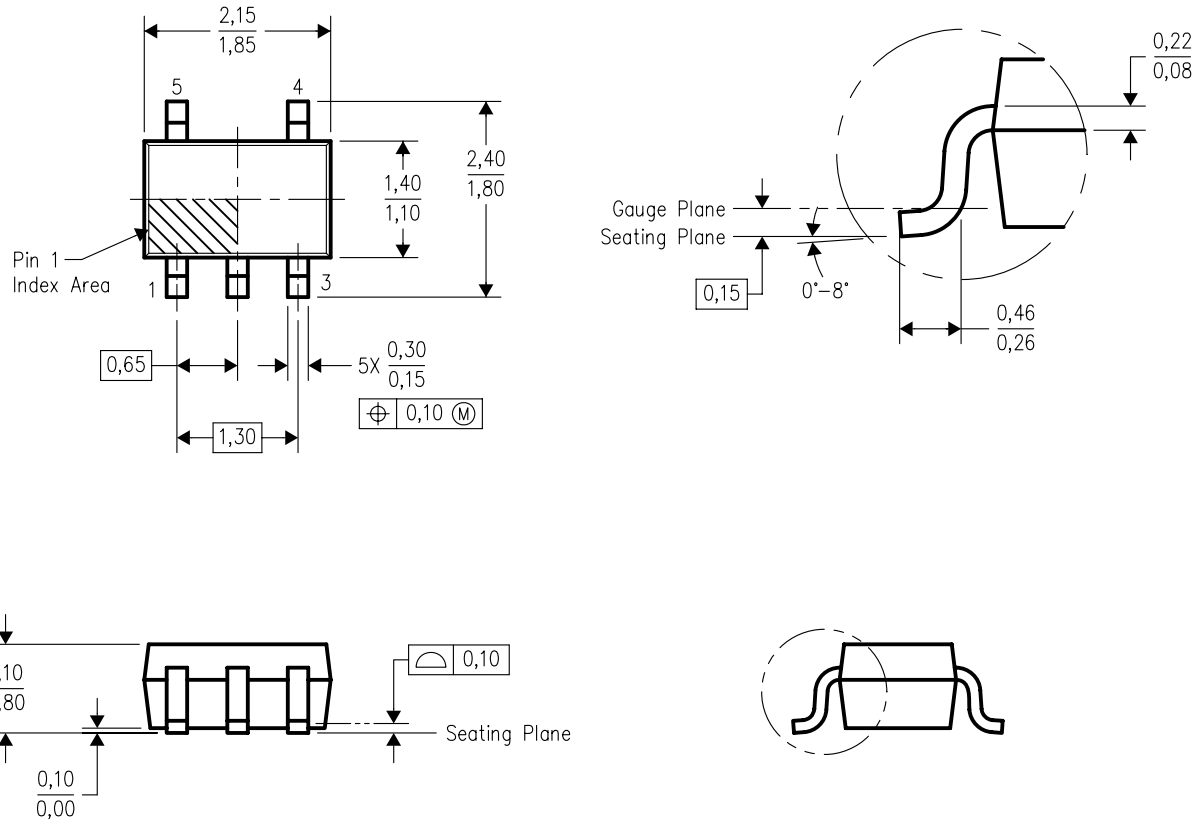

4093553–3/G 01/2007

NOTES:
A. All linear dimensions are in millimeters.
B. This drawing is subject to change without notice.
C. Body dimensions do not include mold flash or protrusion. Mold flash and protrusion shall not exceed 0.15 per side.
D. Falls within JEDEC MO–203 variation AA.

DCK (R–PDSO–G5) PLASTIC SMALL OUTLINE

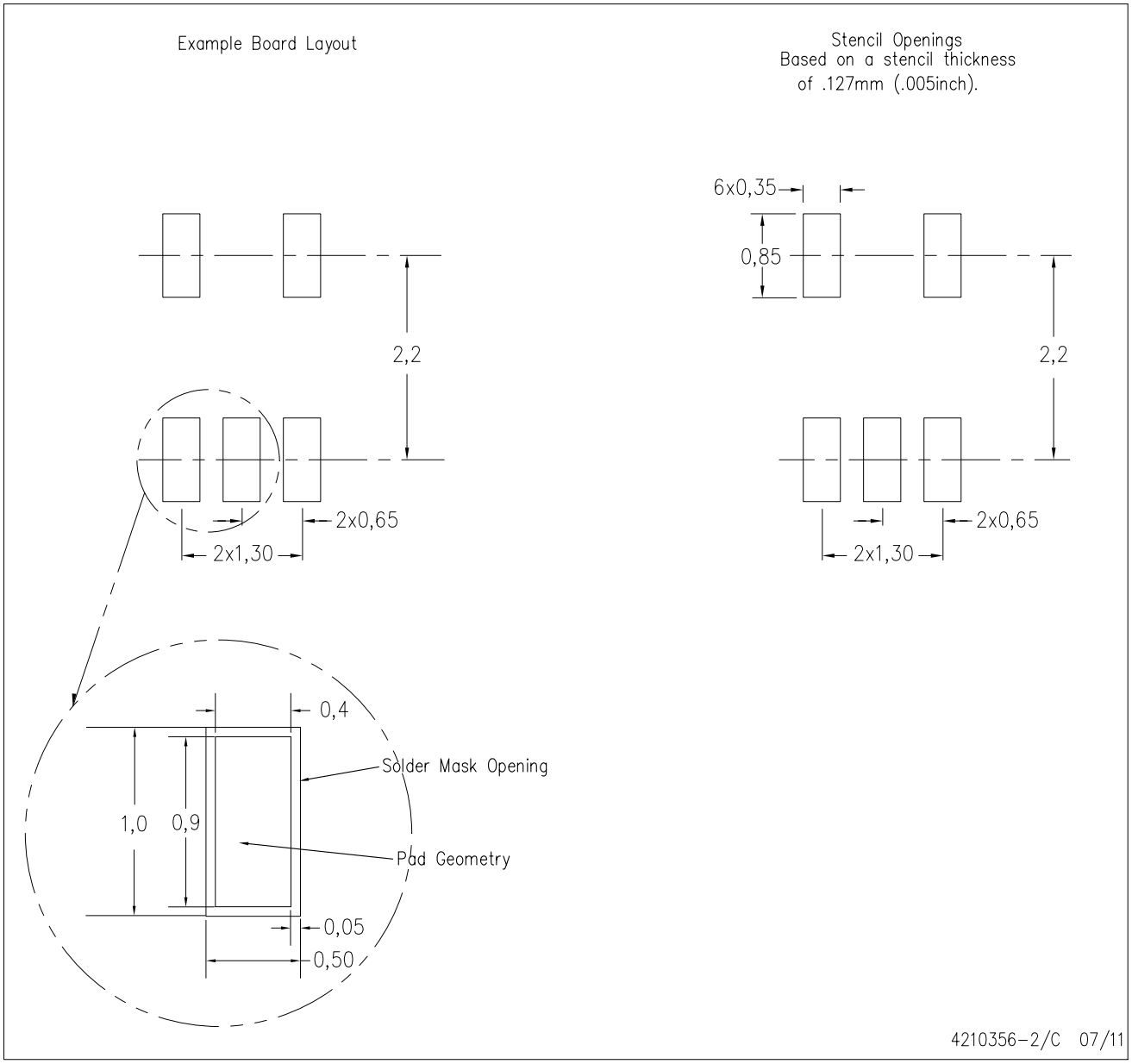

NOTES:
A. All linear dimensions are in millimeters.
B. This drawing is subject to change without notice.
C. Customers should place a note on the circuit board fabrication drawing not to alter the center solder mask defined pad.
D. Publication IPC–7351 is recommended for alternate designs.
E. Laser cutting apertures with trapezoidal walls and also rounding corners will offer better paste release. Customers should contact their board assembly site for stencil design recommendations. Example stencil design based on a 50% volumetric metal load solder paste. Refer to IPC–7525 for other stencil recommendations.

YZR0004

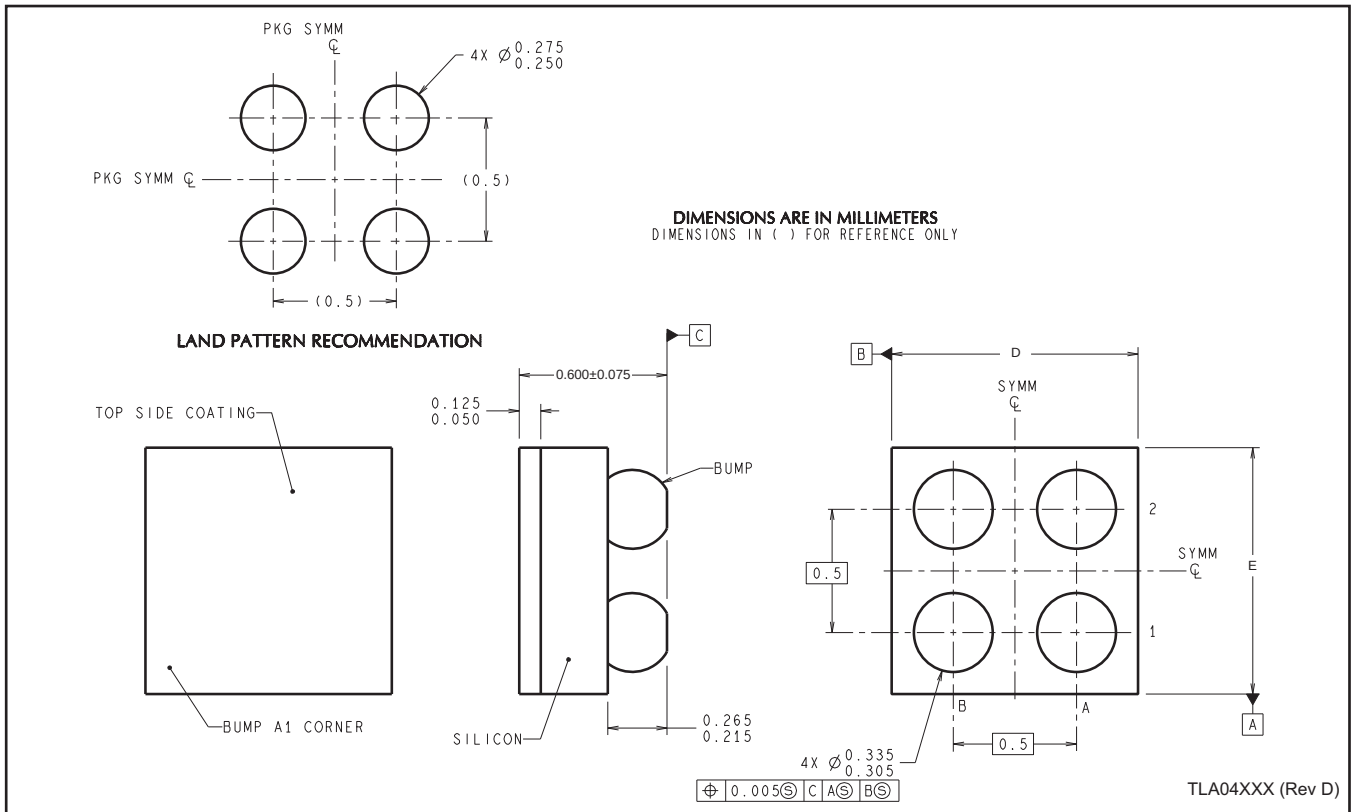

D: Max = 0.994 mm, Min =0.933 mm

E: Max = 0.994 mm, Min =0.933 mm

4215042/A 12/12

NOTES: A. All linear dimensions are in millimeters. Dimensioning and tolerancing per ASME Y14.5M-1994.
B. This drawing is subject to change without notice.

IMPORTANT NOTICE AND DISCLAIMER

TI PROVIDES TECHNICAL AND RELIABILITY DATA (INCLUDING DATA SHEETS), DESIGN RESOURCES (INCLUDING REFERENCE DESIGNS), APPLICATION OR OTHER DESIGN ADVICE, WEB TOOLS, SAFETY INFORMATION, AND OTHER RESOURCES “AS IS” AND WITH ALL FAULTS, AND DISCLAIMS ALL WARRANTIES, EXPRESS AND IMPLIED, INCLUDING WITHOUT LIMITATION ANY IMPLIED WARRANTIES OF MERCHANTABILITY, FITNESS FOR A PARTICULAR PURPOSE OR NON-INFRINGEMENT OF THIRD PARTY INTELLECTUAL PROPERTY RIGHTS.

These resources are intended for skilled developers designing with TI products. You are solely responsible for (1) selecting the appropriate TI products for your application, (2) designing, validating and testing your application, and (3) ensuring your application meets applicable standards, and any other safety, security, regulatory or other requirements.

These resources are subject to change without notice. TI grants you permission to use these resources only for development of an application that uses the TI products described in the resource. Other reproduction and display of these resources is prohibited. No license is granted to any other TI intellectual property right or to any third party intellectual property right. TI disclaims responsibility for, and you will fully indemnify TI and its representatives against, any claims, damages, costs, losses, and liabilities arising out of your use of these resources.

TI’s products are provided subject to TI’s Terms of Sale or other applicable terms available either on ti.com or provided in conjunction with such TI products. TI’s provision of these resources does not expand or otherwise alter TI’s applicable warranties or warranty disclaimers for TI products.

TI objects to and rejects any additional or different terms you may have proposed.

Mailing Address: Texas Instruments, Post Office Box 655303, Dallas, Texas 75265
Copyright © 2021, Texas Instruments Incorporated