TMUX1204 5V 4:1 通用型模拟多路复用器

1 特性

- 轨至轨运行
- 双向信号路径
- 1.8V 逻辑兼容
- 失效防护逻辑
- 低导通电阻：5Ω
- 宽电源电压范围：1.08V 至 5.5V
- -40°C 至 +125°C 工作温度
- 低电源电流：10nA
- 转换时间：14ns
- 先断后合开关
- ESD 保护 HBM：2000V

2 应用

- 模拟和数字多路复用或多路信号分离
- 电机驱动器
- 伺服驱动器控制模块
- 楼宇自动化
- 条形码扫描仪
- 模拟输入模块
- 电力输送
- 烟雾探测器
- 视频监控
- 热成像摄像机
- 电子销售终端
- 电器
- 消费类音频

3 说明

TMUX1204 是一款现代互补金属氧化物半导体 (CMOS) 模拟多路复用器 (MUX)，可提供 4:1 单端（1 通道）配置。TMUX1204 由单电源供电（1.08V 至 5.5V），适用于 从 个人电子设备到楼宇自动化系统的各种应用。低电源电流为 10nA，可用于便携式 应用。

所有逻辑输入均具有兼容 1.8V 逻辑电平的阈值，当器件在有效电源电压范围内运行时，这些阈值可确保 TTL 和 CMOS 逻辑兼容性。失效防护逻辑 电路允许在电源引脚之前的控制引脚上施加电压，从而保护器件免受潜在的损害。

器件信息(1)

器件型号	封装	封装尺寸（标称值）
TMUX1204	VSSOP (10) (DGS)	3.00mm × 3.00mm
	USON (10) (DQA)	2.50mm x 1.00mm

(1) 如需了解所有可用封装，请参阅数据表末尾的封装选项附录。

应用示例

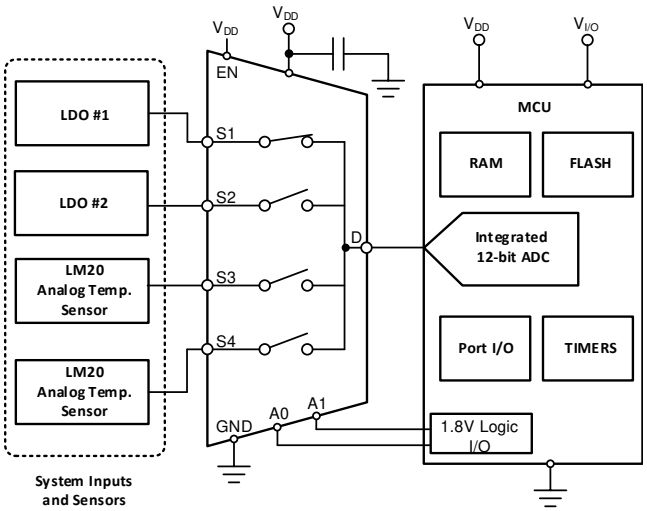

TMUX1204 方框图

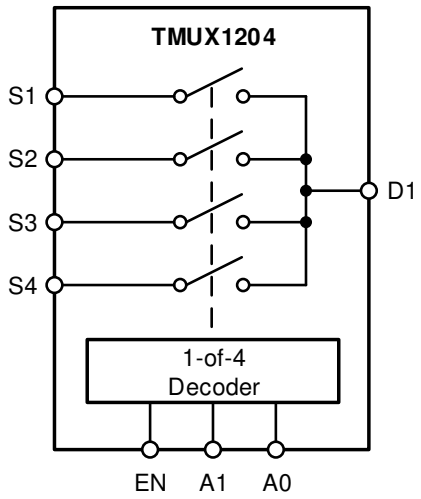

本文档旨在为方便起见，提供有关 TI 产品中文版本的信息，以确认产品的概要。 有关适用的官方英文版本的最新信息，请访问 www.ti.com，其内容始终优先。 TI 不保证翻译的准确性和有效性。 在实际设计之前，请务必参考最新版本的英文版本。

目录

1 特性 ... 1
2 应用 ... 1
3 说明 ... 1
4 修订历史记录 ... 2
5 **Pin Configuration and Functions** ... 3
6 **Specifications** ... 4
6.1 Absolute Maximum Ratings ... 4
6.2 ESD Ratings ... 4
6.3 Recommended Operating Conditions ... 4
6.4 Thermal Information ... 4
6.5 Electrical Characteristics (V_{DD} = 5 V ±10 %) ... 5
6.6 Electrical Characteristics (V_{DD} = 3.3 V ±10 %) ... 7
6.7 Electrical Characteristics (V_{DD} = 1.8 V ±10 %) ... 9
6.8 Electrical Characteristics (V_{DD} = 1.2 V ±10 %) ... 11
6.9 Typical Characteristics ... 13
7 **Parameter Measurement Information** ... 14
7.1 On-Resistance ... 14
7.2 Off-Leakage Current ... 14
7.3 On-Leakage Current ... 15
7.4 Transition Time ... 15
7.5 Break-Before-Make ... 16
7.6 $t_{ON(EN)}$ and $t_{OFF(EN)}$ ... 16
7.7 Charge Injection ... 17
7.8 Off Isolation ... 17
7.9 Crosstalk ... 18
7.10 Bandwidth ... 18
8 **Detailed Description** ... 19
8.1 Functional Block Diagram ... 19
8.2 Feature Description ... 19
8.3 Device Functional Modes ... 20
8.4 Truth Tables ... 20
9 **Application and Implementation** ... 21
9.1 Application Information ... 21
9.2 Typical Application ... 21
9.3 Design Requirements ... 21
9.4 Detailed Design Procedure ... 22
9.5 Application Curve ... 22
10 **Power Supply Recommendations** ... 22
11 **Layout** ... 23
11.1 Layout Guidelines ... 23
11.2 Layout Example ... 23
12 器件和文档支持 ... 24
12.1 文档支持 ... 24
12.2 接收文档更新通知 ... 24
12.3 社区资源 ... 24
12.4 商标 ... 24
12.5 静电放电警告 ... 24
12.6 Glossary ... 24
13 机械、封装和可订购信息 ... 24

4 修订历史记录

注：之前版本的页码可能与当前版本有所不同。

Changes from Original (April 2019) to Revision A	**Page**
• 删除了*器件信息* 表中 DQA 封装的产品预览	1
• Deleted Product preview from the DQA package in the *Pin Configuration and Functions* section	3
• Added Note 2 to the *Pin Functions* table	3

Copyright © 2019, Texas Instruments Incorporated

5 Pin Configuration and Functions

DGS Package
10-Pin VSSOP
Top View

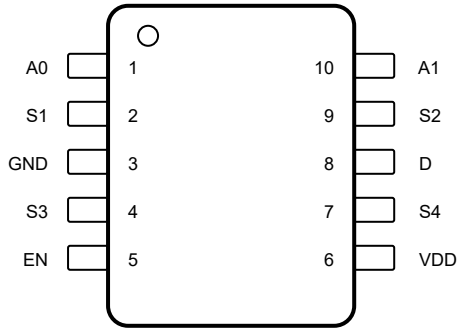

Not to scale

DQA Package
10-Pin USON
Top View

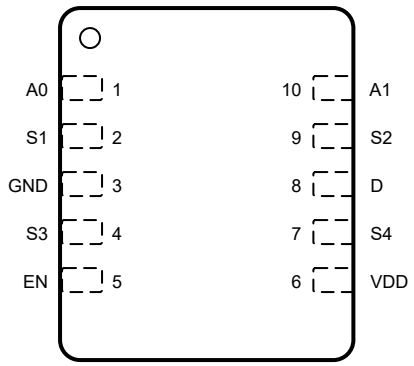

Not to scale

Pin Functions

PIN		TYPE(1)	DESCRIPTION(2)
NAME	DGS, DQA		
A0	1	I	Address line 0. Controls the switch configuration as shown in 表 1.
S1	2	I/O	Source pin 1. Can be an input or output.
GND	3	P	Ground (0 V) reference
S3	4	I/O	Source pin 3. Can be an input or output.
EN	5	I	Active high logic enable. When this pin is low, all switches are turned off. When this pin is high, the A[1:0] logic inputs determine which switch is turned on.
VDD	6	P	Positive power supply. This pin is the most positive power-supply potential. For reliable operation, connect a decoupling capacitor ranging from 0.1 µF to 10 µF between V_{DD} and GND.
S4	7	I/O	Source pin 4. Can be an input or output.
D	8	I/O	Drain pin. Can be an input or output.
S2	9	I/O	Source pin 2. Can be an input or output.
A1	10	I	Address line 1. Controls the switch configuration as shown in 表 1.

(1) I = input, O = output, I/O = input and output, P = power
(2) For unused pins, refer to the Device Functional Modes

Copyright © 2019, Texas Instruments Incorporated

6 Specifications

6.1 Absolute Maximum Ratings

over operating free-air temperature range (unless otherwise noted) (1) (2) (3)

		MIN	MAX	UNIT
V_{DD}	Supply voltage	–0.5	6	V
V_{SEL} or V_{EN}	Logic control input pin voltage (EN, A0, A1)	–0.5	6	V
I_{SEL} or I_{EN}	Logic control input pin current (EN, A0, A1)	–30	30	mA
V_S or V_D	Source or drain voltage (Sx, D)	–0.5	V_{DD}+0.5	V
I_S or $I_{D\ (CONT)}$	Source or drain continuous current (Sx, D)	–30	30	mA
T_{stg}	Storage temperature	–65	150	°C
T_J	Junction temperature		150	°C

(1) Stresses beyond those listed under *Absolute Maximum Rating* may cause permanent damage to the device. These are stress ratings only, which do not imply functional operation of the device at these or any other conditions beyond those indicated under *Recommended Operating Condition*. Exposure to absolute-maximum-rated conditions for extended periods may affect device reliability.
(2) The algebraic convention, whereby the most negative value is a minimum and the most positive value is a maximum.
(3) All voltages are with respect to ground, unless otherwise specified.

6.2 ESD Ratings

			VALUE	UNIT
$V_{(ESD)}$	Electrostatic discharge	Human body model (HBM), per ANSI/ESDA/JEDEC JS-001, all pins (1)	±2000	V
		Charged device model (CDM), per JEDEC specification JESD22-C101 or ANSI/ESDA/JEDEC JS-002, all pins (2)	±750	

(1) JEDEC document JEP155 states that 500-V HBM allows safe manufacturing with a standard ESD control process.
(2) JEDEC document JEP157 states that 250-V CDM allows safe manufacturing with a standard ESD control process.

6.3 Recommended Operating Conditions

over operating free-air temperature range (unless otherwise noted)

		MIN	NOM	MAX	UNIT
V_{DD}	Positive power supply voltage	1.08		5.5	V
V_S or V_D	Signal path input/output voltage (source or drain pin) (Sx, D)	0		V_{DD}	V
V_{SEL} or V_{EN}	Logic control input pin voltage (EN, A0, A1)	0		5.5	V
T_A	Ambient temperature	–40		125	°C

6.4 Thermal Information

THERMAL METRIC (1)		TMUX1204		UNIT
		DGS (VSSOP)	DQA (USON)	
		10 PINS	10 PINS	
$R_{\theta JA}$	Junction-to-ambient thermal resistance	193.9	173.0	°C/W
$R_{\theta JC(top)}$	Junction-to-case (top) thermal resistance	83.1	99.7	°C/W
$R_{\theta JB}$	Junction-to-board thermal resistance	116.5	73.5	°C/W
Ψ_{JT}	Junction-to-top characterization parameter	22.0	8.9	°C/W
Ψ_{JB}	Junction-to-board characterization parameter	114.6	73.0	°C/W
$R_{\theta JC(bot)}$	Junction-to-case (bottom) thermal resistance	N/A	N/A	°C/W

(1) For more information about traditional and new thermal metrics, see the Semiconductor and IC Package Thermal Metrics application report.

Copyright © 2019, Texas Instruments Incorporated

6.5 Electrical Characteristics (V_{DD} = 5 V ±10 %)

at T_A = 25°C, V_{DD} = 5 V (unless otherwise noted)

PARAMETER		TEST CONDITIONS	TA	MIN	TYP	MAX	UNIT
ANALOG SWITCH							
R_{ON}	On-resistance	V_S = 0 V to V_{DD} I_{SD} = 10 mA Refer to On-Resistance	25°C		5		Ω
			–40°C to +85°C			7	Ω
			–40°C to +125°C			9	Ω
ΔR_{ON}	On-resistance matching between channels	V_S = 0 V to V_{DD} I_{SD} = 10 mA Refer to On-Resistance	25°C		0.15		Ω
			–40°C to +85°C			1	Ω
			–40°C to +125°C			1	Ω
$R_{ON\ FLAT}$	On-resistance flatness	V_S = 0 V to V_{DD} I_{SD} = 10 mA Refer to On-Resistance	25°C		1.5		Ω
			–40°C to +85°C		2		Ω
			–40°C to +125°C		3		Ω
$I_{S(OFF)}$	Source off leakage current(1)	V_{DD} = 5 V Switch Off V_D = 4.5 V / 1.5 V V_S = 1.5 V / 4.5 V Refer to Off-Leakage Current	25°C		±75		nA
			–40°C to +85°C	–150		150	nA
			–40°C to +125°C	–175		175	nA
$I_{D(OFF)}$	Drain off leakage current(1)	V_{DD} = 5 V Switch Off V_D = 4.5 V / 1.5 V V_S = 1.5 V / 4.5 V Refer to Off-Leakage Current	25°C		±200		nA
			–40°C to +85°C	–500		500	nA
			–40°C to +125°C	–750		750	nA
$I_{D(ON)}$ $I_{S(ON)}$	Channel on leakage current	V_{DD} = 5 V Switch On V_D = V_S = 4.5 V / 1.5 V Refer to On-Leakage Current	25°C		±200		nA
			–40°C to +85°C	–500		500	nA
			–40°C to +125°C	–750		750	nA
LOGIC INPUTS (EN, A0, A1)							
V_{IH}	Input logic high		–40°C to +125°C	1.49		5.5	V
V_{IL}	Input logic low		–40°C to +125°C	0		0.87	V
I_{IH} I_{IL}	Input leakage current		25°C		±0.005		µA
I_{IH} I_{IL}	Input leakage current		–40°C to +125°C			±0.10	µA
C_{IN}	Logic input capacitance		25°C		1		pF
C_{IN}	Logic input capacitance		–40°C to +125°C			2	pF
POWER SUPPLY							
I_{DD}	V_{DD} supply current	Logic inputs = 0 V or 5.5 V	25°C		0.01		µA
			–40°C to +125°C			2	µA

(1) When V_S is 4.5 V, V_D is 1.5 V or when V_S is 1.5 V, V_D is 4.5 V.

Copyright © 2019, Texas Instruments Incorporated

Electrical Characteristics (V_{DD} = 5 V ±10 %) (continued)

at T_A = 25°C, V_{DD} = 5 V (unless otherwise noted)

PARAMETER		TEST CONDITIONS	TA	MIN	TYP	MAX	UNIT
DYNAMIC CHARACTERISTICS							
t_{TRAN}	Transition time between channels	V_S = 3 V R_L = 200 Ω, C_L = 15 pF Refer to Transition Time	25°C		14		ns
			–40°C to +85°C			21	ns
			–40°C to +125°C			22	ns
t_{OPEN} (BBM)	Break before make time	V_S = 3 V R_L = 200 Ω, C_L = 15 pF Refer to Break-Before-Make	25°C		8		ns
			–40°C to +85°C	1			ns
			–40°C to +125°C	1			ns
$t_{ON(EN)}$	Enable turn-on time	V_S = 3 V R_L = 200 Ω, C_L = 15 pF Refer to $t_{ON(EN)}$ and $t_{OFF(EN)}$	25°C		14		ns
			–40°C to +85°C			20	ns
			–40°C to +125°C			20	ns
$t_{OFF(EN)}$	Enable turn-off time	V_S = 3 V R_L = 200 Ω, C_L = 15 pF Refer to $t_{ON(EN)}$ and $t_{OFF(EN)}$	25°C		5		ns
			–40°C to +85°C			20	ns
			–40°C to +125°C			20	ns
Q_C	Charge Injection	V_S = 1 V R_S = 0 Ω, C_L = 1 nF Refer to Charge Injection	25°C		±9		pC
O_{ISO}	Off Isolation	R_L = 50 Ω, C_L = 5 pF f = 1 MHz Refer to Off Isolation	25°C		–62		dB
		R_L = 50 Ω, C_L = 5 pF f = 10 MHz Refer to Off Isolation	25°C		–42		dB
X_{TALK}	Crosstalk	R_L = 50 Ω, C_L = 5 pF f = 1 MHz Refer to Crosstalk	25°C		–62		dB
		R_L = 50 Ω, C_L = 5 pF f = 10 MHz Refer to Crosstalk	25°C		–42		dB
BW	Bandwidth	R_L = 50 Ω, C_L = 5 pF Refer to Bandwidth	25°C		125		MHz
C_{SOFF}	Source off capacitance	f = 1 MHz	25°C		13		pF
C_{DOFF}	Drain off capacitance	f = 1 MHz	25°C		38		pF
C_{SON} C_{DON}	On capacitance	f = 1 MHz	25°C		42		pF

Copyright © 2019, Texas Instruments Incorporated

6.6 Electrical Characteristics (V_{DD} = 3.3 V ±10 %)

at T_A = 25°C, V_{DD} = 3.3 V (unless otherwise noted)

PARAMETER		TEST CONDITIONS	TA	MIN	TYP	MAX	UNIT
ANALOG SWITCH							
R_{ON}	On-resistance	V_S = 0 V to V_{DD} I_{SD} = 10 mA Refer to On-Resistance	25°C		9		Ω
			–40°C to +85°C			15	Ω
			–40°C to +125°C			17	Ω
ΔR_{ON}	On-resistance matching between channels	V_S = 0 V to V_{DD} I_{SD} = 10 mA Refer to On-Resistance	25°C		0.15		Ω
			–40°C to +85°C			1	Ω
			–40°C to +125°C			1	Ω
$R_{ON\ FLAT}$	On-resistance flatness	V_S = 0 V to V_{DD} I_{SD} = 10 mA Refer to On-Resistance	25°C		3		Ω
			–40°C to +85°C		5		Ω
			–40°C to +125°C		6		Ω
$I_{S(OFF)}$	Source off leakage current(1)	V_{DD} = 3.3 V Switch Off V_D = 3 V / 1 V V_S = 1 V / 3 V Refer to Off-Leakage Current	25°C		±75		nA
			–40°C to +85°C	–150		150	nA
			–40°C to +125°C	–175		175	nA
$I_{D(OFF)}$	Drain off leakage current(1)	V_{DD} = 3.3 V Switch Off V_D = 3 V / 1 V V_S = 1 V / 3 V Refer to Off-Leakage Current	25°C		±200		nA
			–40°C to +85°C	–500		500	nA
			–40°C to +125°C	–750		750	nA
$I_{D(ON)}$ $I_{S(ON)}$	Channel on leakage current	V_{DD} = 3.3 V Switch On V_D = V_S = 3 V / 1 V Refer to On-Leakage Current	25°C		±200		nA
			–40°C to +85°C	–500		500	nA
			–40°C to +125°C	–750		750	nA
LOGIC INPUTS (EN, A0, A1)							
V_{IH}	Input logic high		–40°C to +125°C	1.35		5.5	V
V_{IL}	Input logic low		–40°C to +125°C	0		0.8	V
I_{IH} I_{IL}	Input leakage current		25°C		±0.005		µA
I_{IH} I_{IL}	Input leakage current		–40°C to +125°C			±0.10	µA
C_{IN}	Logic input capacitance		25°C		1		pF
C_{IN}	Logic input capacitance		–40°C to +125°C			2	pF
POWER SUPPLY							
I_{DD}	V_{DD} supply current	Logic inputs = 0 V or 5.5 V	25°C		0.01		µA
			–40°C to +125°C			1.3	µA

(1) When V_S is 3 V, V_D is 1 V or when V_S is 1 V, V_D is 3 V.

Copyright © 2019, Texas Instruments Incorporated

Electrical Characteristics (V_{DD} = 3.3 V ±10 %) (continued)

at T_A = 25°C, V_{DD} = 3.3 V (unless otherwise noted)

PARAMETER		TEST CONDITIONS	TA	MIN	TYP	MAX	UNIT
DYNAMIC CHARACTERISTICS							
t_{TRAN}	Transition time between channels	V_S = 2 V R_L = 200 Ω, C_L = 15 pF Refer to Transition Time	25°C		14		ns
			–40°C to +85°C			25	ns
			–40°C to +125°C			25	ns
t_{OPEN} (BBM)	Break before make time	V_S = 2 V R_L = 200 Ω, C_L = 15 pF Refer to Break-Before-Make	25°C		8		ns
			–40°C to +85°C	1			ns
			–40°C to +125°C	1			ns
$t_{ON(EN)}$	Enable turn-on time	V_S = 2 V R_L = 200 Ω, C_L = 15 pF Refer to $t_{ON(EN)}$ and $t_{OFF(EN)}$	25°C		14		ns
			–40°C to +85°C			25	ns
			–40°C to +125°C			25	ns
$t_{OFF(EN)}$	Enable turn-off time	V_S = 2 V R_L = 200 Ω, C_L = 15 pF Refer to $t_{ON(EN)}$ and $t_{OFF(EN)}$	25°C		7		ns
			–40°C to +85°C			13	ns
			–40°C to +125°C			13	ns
Q_C	Charge Injection	V_S = 1 V R_S = 0 Ω, C_L = 1 nF Refer to Charge Injection	25°C		±7		pC
O_{ISO}	Off Isolation	R_L = 50 Ω, C_L = 5 pF f = 1 MHz Refer to Off Isolation	25°C		–62		dB
		R_L = 50 Ω, C_L = 5 pF f = 10 MHz Refer to Off Isolation	25°C		–42		dB
X_{TALK}	Crosstalk	R_L = 50 Ω, C_L = 5 pF f = 1 MHz Refer to Crosstalk	25°C		–62		dB
		R_L = 50 Ω, C_L = 5 pF f = 10 MHz Refer to Crosstalk	25°C		–42		dB
BW	Bandwidth	R_L = 50 Ω, C_L = 5 pF Refer to Bandwidth	25°C		125		MHz
C_{SOFF}	Source off capacitance	f = 1 MHz	25°C		13		pF
C_{DOFF}	Drain off capacitance	f = 1 MHz	25°C		38		pF
C_{SON} C_{DON}	On capacitance	f = 1 MHz	25°C		42		pF

Copyright © 2019, Texas Instruments Incorporated

6.7 Electrical Characteristics (V_{DD} = 1.8 V ±10 %)

at T_A = 25°C, V_{DD} = 1.8 V (unless otherwise noted)

PARAMETER		TEST CONDITIONS	TA	MIN	TYP	MAX	UNIT
ANALOG SWITCH							
R_{ON}	On-resistance	V_S = 0 V to V_{DD} I_{SD} = 10 mA Refer to On-Resistance	25°C		40		Ω
			–40°C to +85°C			80	Ω
			–40°C to +125°C			80	Ω
ΔR_{ON}	On-resistance matching between channels	V_S = 0 V to V_{DD} I_{SD} = 10 mA Refer to On-Resistance	25°C		0.15		Ω
			–40°C to +85°C			1.5	Ω
			–40°C to +125°C			1.5	Ω
$I_{S(OFF)}$	Source off leakage current(1)	V_{DD} = 1.98 V Switch Off V_D = 1.8 V / 1 V V_S = 1 V / 1.8 V Refer to Off-Leakage Current	25°C		±75		nA
			–40°C to +85°C	-150		150	nA
			–40°C to +125°C	-175		175	nA
$I_{D(OFF)}$	Drain off leakage current(1)	V_{DD} = 1.98 V Switch Off V_D = 1.8 V / 1 V V_S = 1 V / 1.8 V Refer to Off-Leakage Current	25°C		±200		nA
			–40°C to +85°C	–500		500	nA
			–40°C to +125°C	–750		750	nA
$I_{D(ON)}$ $I_{S(ON)}$	Channel on leakage current	V_{DD} = 1.98 V Switch On V_D = V_S = 1.8 V / 1 V Refer to On-Leakage Current	25°C		±200		nA
			–40°C to +85°C	–500		500	nA
			–40°C to +125°C	–750		750	nA
LOGIC INPUTS (EN, A0, A1)							
V_{IH}	Input logic high		–40°C to +125°C	1.07		5.5	V
V_{IL}	Input logic low		–40°C to +125°C	0		0.68	V
I_{IH} I_{IL}	Input leakage current		25°C		±0.005		µA
I_{IH} I_{IL}	Input leakage current		–40°C to +125°C			±0.10	µA
C_{IN}	Logic input capacitance		25°C		1		pF
C_{IN}	Logic input capacitance		–40°C to +125°C			2	pF
POWER SUPPLY							
I_{DD}	V_{DD} supply current	Logic inputs = 0 V or 5.5 V	25°C		0.005		µA
			–40°C to +125°C			0.95	µA

(1) When V_S is 1.8 V, V_D is 1 V or when V_S is 1 V, V_D is 1.8 V.

Copyright © 2019, Texas Instruments Incorporated

Electrical Characteristics (V_{DD} = 1.8 V ±10 %) (continued)

at T_A = 25°C, V_{DD} = 1.8 V (unless otherwise noted)

PARAMETER		TEST CONDITIONS	TA	MIN	TYP	MAX	UNIT
DYNAMIC CHARACTERISTICS							
t_{TRAN}	Transition time between channels	V_S = 1 V R_L = 200 Ω, C_L = 15 pF Refer to Transition Time	25°C		28		ns
			–40°C to +85°C			48	ns
			–40°C to +125°C			48	ns
t_{OPEN} (BBM)	Break before make time	V_S = 1 V R_L = 200 Ω, C_L = 15 pF Refer to Break-Before-Make	25°C		16		ns
			–40°C to +85°C	1			ns
			–40°C to +125°C	1			ns
$t_{ON(EN)}$	Enable turn-on time	V_S = 1 V R_L = 200 Ω, C_L = 15 pF Refer to $t_{ON(EN)}$ and $t_{OFF(EN)}$	25°C		28		ns
			–40°C to +85°C			48	ns
			–40°C to +125°C			48	ns
$t_{OFF(EN)}$	Enable turn-off time	V_S = 1 V R_L = 200 Ω, C_L = 15 pF Refer to $t_{ON(EN)}$ and $t_{OFF(EN)}$	25°C		16		ns
			–40°C to +85°C			27	ns
			–40°C to +125°C			27	ns
Q_C	Charge Injection	V_S = 1 V R_S = 0 Ω, C_L = 1 nF Refer to Charge Injection	25°C		–2		pC
O_{ISO}	Off Isolation	R_L = 50 Ω, C_L = 5 pF f = 1 MHz Refer to Off Isolation	25°C		–62		dB
		R_L = 50 Ω, C_L = 5 pF f = 10 MHz Refer to Off Isolation	25°C		–42		dB
X_{TALK}	Crosstalk	R_L = 50 Ω, C_L = 5 pF f = 1 MHz Refer to Crosstalk	25°C		–62		dB
		R_L = 50 Ω, C_L = 5 pF f = 10 MHz Refer to Crosstalk	25°C		–42		dB
BW	Bandwidth	R_L = 50 Ω, C_L = 5 pF Refer to Bandwidth	25°C		125		MHz
C_{SOFF}	Source off capacitance	f = 1 MHz	25°C		13		pF
C_{DOFF}	Drain off capacitance	f = 1 MHz	25°C		38		pF
C_{SON} C_{DON}	On capacitance	f = 1 MHz	25°C		42		pF

Copyright © 2019, Texas Instruments Incorporated

6.8 Electrical Characteristics (V_{DD} = 1.2 V ±10 %)

PARAMETER		TEST CONDITIONS	TA	MIN	TYP	MAX	UNIT
ANALOG SWITCH							
R_{ON}	On-resistance	V_S = 0 V to V_{DD} I_{SD} = 10 mA Refer to On-Resistance	25°C		70		Ω
			–40°C to +85°C			105	Ω
			–40°C to +125°C			105	Ω
ΔR_{ON}	On-resistance matching between channels	V_S = 0 V to V_{DD} I_{SD} = 10 mA Refer to On-Resistance	25°C		0.15		Ω
			–40°C to +85°C			1.5	Ω
			–40°C to +125°C			1.5	Ω
$I_{S(OFF)}$	Source off leakage current(1)	V_{DD} = 1.32 V Switch Off V_D = 1.2 V / 1 V V_S = 1 V / 1.2 V Refer to Off-Leakage Current	25°C		±75		nA
			–40°C to +85°C	–150		150	nA
			–40°C to +125°C	–175		175	nA
$I_{D(OFF)}$	Drain off leakage current(1)	V_{DD} = 1.32 V Switch Off V_D = 1.2 V / 1 V V_S = 1 V / 1.2 V Refer to Off-Leakage Current	25°C		±200		nA
			–40°C to +85°C	–500		500	nA
			–40°C to +125°C	–750		750	nA
$I_{D(ON)}$ $I_{S(ON)}$	Channel on leakage current	V_{DD} = 1.32 V Switch On V_D = V_S = 1.2 V / 1 V Refer to On-Leakage Current	25°C		±200		nA
			–40°C to +85°C	–500		500	nA
			–40°C to +125°C	–750		750	nA
LOGIC INPUTS (EN, A0, A1)							
V_{IH}	Input logic high		–40°C to +125°C	0.96		5.5	V
V_{IL}	Input logic low		–40°C to +125°C	0		0.36	V
I_{IH} I_{IL}	Input leakage current		25°C		±0.005		µA
I_{IH} I_{IL}	Input leakage current		–40°C to +125°C			±0.10	µA
C_{IN}	Logic input capacitance		25°C		1		pF
C_{IN}	Logic input capacitance		–40°C to +125°C			2	pF
POWER SUPPLY							
I_{DD}	V_{DD} supply current	Logic inputs = 0 V or 5.5 V	25°C		0.005		µA
			–40°C to +125°C			0.8	µA

(1) When V_S is 1 V, V_D is 1.2 V or when V_S is 1.2 V, V_D is 1 V.

Copyright © 2019, Texas Instruments Incorporated

Electrical Characteristics (V_{DD} = 1.2 V ±10 %) (continued)

PARAMETER		TEST CONDITIONS	TA	MIN	TYP	MAX	UNIT
DYNAMIC CHARACTERISTICS							
t_{TRAN}	Transition time between channels	V_S = 1 V R_L = 200 Ω, C_L = 15 pF Refer to Transition Time	25°C		60		ns
			–40°C to +85°C			210	ns
			–40°C to +125°C			210	ns
t_{OPEN} (BBM)	Break before make time	V_S = 1 V R_L = 200 Ω, C_L = 15 pF Refer to Break-Before-Make	25°C		28		ns
			–40°C to +85°C	1			ns
			–40°C to +125°C	1			ns
$t_{ON(EN)}$	Enable turn-on time	V_S = 1 V R_L = 200 Ω, C_L = 15 pF Refer to $t_{ON(EN)}$ and $t_{OFF(EN)}$	25°C		60		ns
			–40°C to +85°C			190	ns
			–40°C to +125°C			190	ns
$t_{OFF(EN)}$	Enable turn-off time	V_S = 1 V R_L = 200 Ω, C_L = 15 pF Refer to $t_{ON(EN)}$ and $t_{OFF(EN)}$	25°C		45		ns
			–40°C to +85°C			150	ns
			–40°C to +125°C			150	ns
Q_C	Charge Injection	V_S = 1 V R_S = 0 Ω, C_L = 1 nF Refer to Charge Injection	25°C		±2		pC
O_{ISO}	Off Isolation	R_L = 50 Ω, C_L = 5 pF f = 1 MHz Refer to Off Isolation	25°C		–62		dB
		R_L = 50 Ω, C_L = 5 pF f = 10 MHz Refer to Off Isolation	25°C		–42		dB
X_{TALK}	Crosstalk	R_L = 50 Ω, C_L = 5 pF f = 1 MHz Refer to Crosstalk	25°C		–62		dB
		R_L = 50 Ω, C_L = 5 pF f = 10 MHz Refer to Crosstalk	25°C		–42		dB
BW	Bandwidth	R_L = 50 Ω, C_L = 5 pF Refer to Bandwidth	25°C		125		MHz
C_{SOFF}	Source off capacitance	f = 1 MHz	25°C		13		pF
C_{DOFF}	Drain off capacitance	f = 1 MHz	25°C		38		pF
C_{SON} C_{DON}	On capacitance	f = 1 MHz	25°C		42		pF

版权 © 2019, Texas Instruments Incorporated

6.9 Typical Characteristics

at T_A = 25°C, V_{DD} = 5 V (unless otherwise noted)

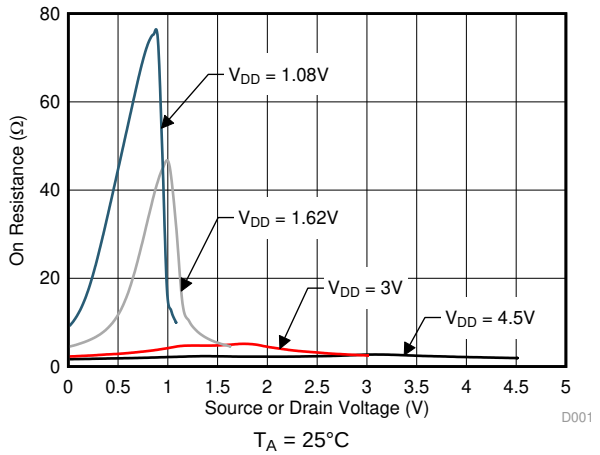

图 1. On-Resistance vs Source or Drain Voltage

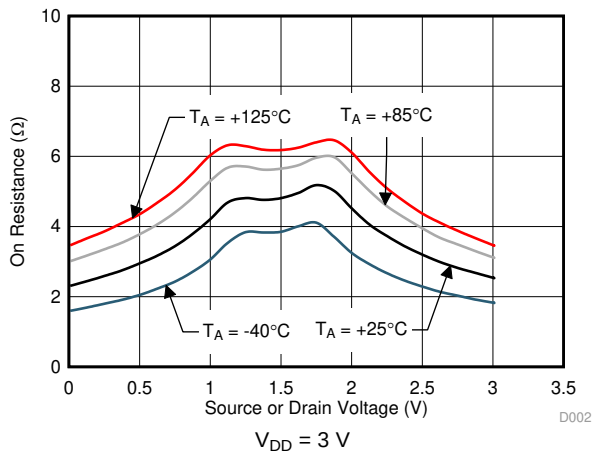

图 2. On-Resistance vs Source or Drain Voltage

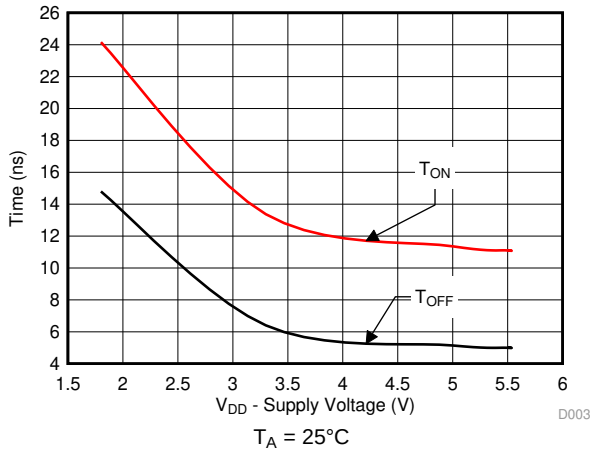

图 3. $T_{ON\ (EN)}$ and $T_{OFF\ (EN)}$ vs Supply Voltage

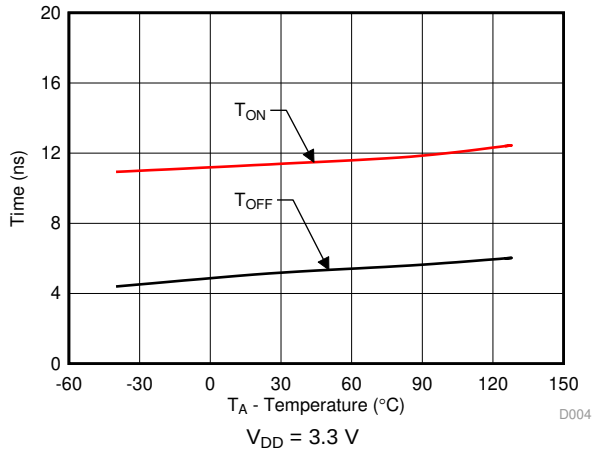

图 4. $T_{ON\ (EN)}$ and $T_{OFF\ (EN)}$ vs Temperature

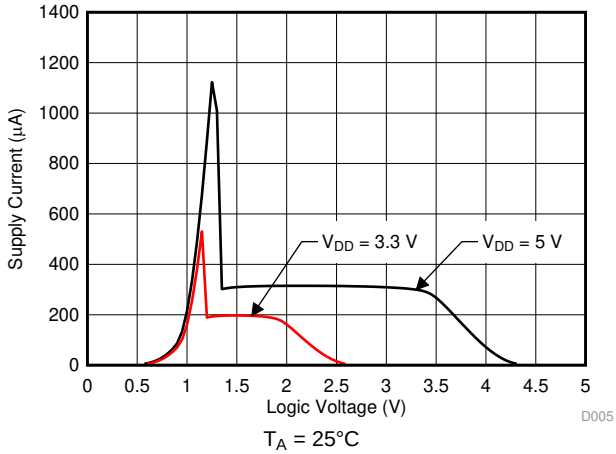

图 5. Supply Current vs Logic Voltage

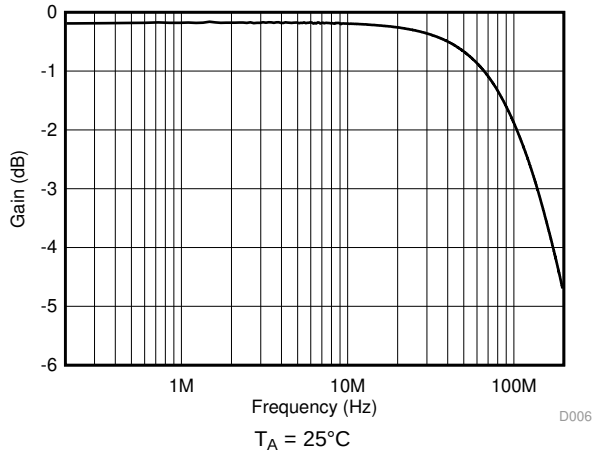

图 6. Frequency Response

7 Parameter Measurement Information

7.1 On-Resistance

The on-resistance of a device is the ohmic resistance between the source (Sx) and drain (D) pins of the device. The on-resistance varies with input voltage and supply voltage. The symbol R_{ON} is used to denote on-resistance. The measurement setup used to measure R_{ON} is shown in 图 7. Voltage (V) and current (I_{SD}) are measured using this setup, and R_{ON} is computed with $R_{ON} = V / I_{SD}$:

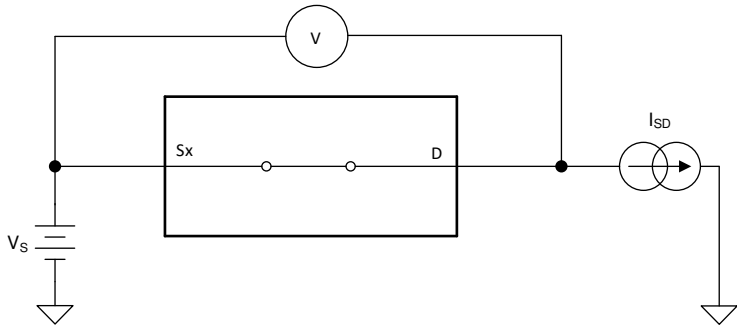

图 7. On-Resistance Measurement Setup

7.2 Off-Leakage Current

There are two types of leakage currents associated with a switch during the off state:

1. Source off-leakage current
2. Drain off-leakage current

Source leakage current is defined as the leakage current flowing into or out of the source pin when the switch is off. This current is denoted by the symbol $I_{S(OFF)}$.

Drain leakage current is defined as the leakage current flowing into or out of the drain pin when the switch is off. This current is denoted by the symbol $I_{D(OFF)}$.

The setup used to measure both off-leakage currents is shown in 图 8.

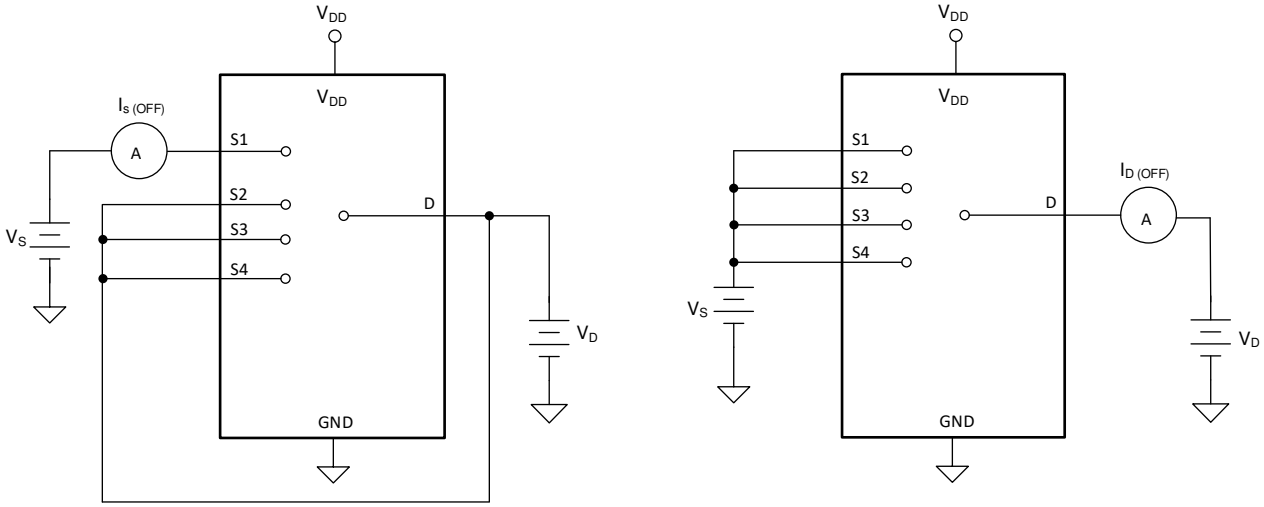

图 8. Off-Leakage Measurement Setup

版权 © 2019, Texas Instruments Incorporated

7.3 On-Leakage Current

Source on-leakage current is defined as the leakage current flowing into or out of the source pin when the switch is on. This current is denoted by the symbol $I_{S(ON)}$.

Drain on-leakage current is defined as the leakage current flowing into or out of the drain pin when the switch is on. This current is denoted by the symbol $I_{D(ON)}$.

Either the source pin or drain pin is left floating during the measurement. 图 9 shows the circuit used for measuring the on-leakage current, denoted by $I_{S(ON)}$ or $I_{D(ON)}$.

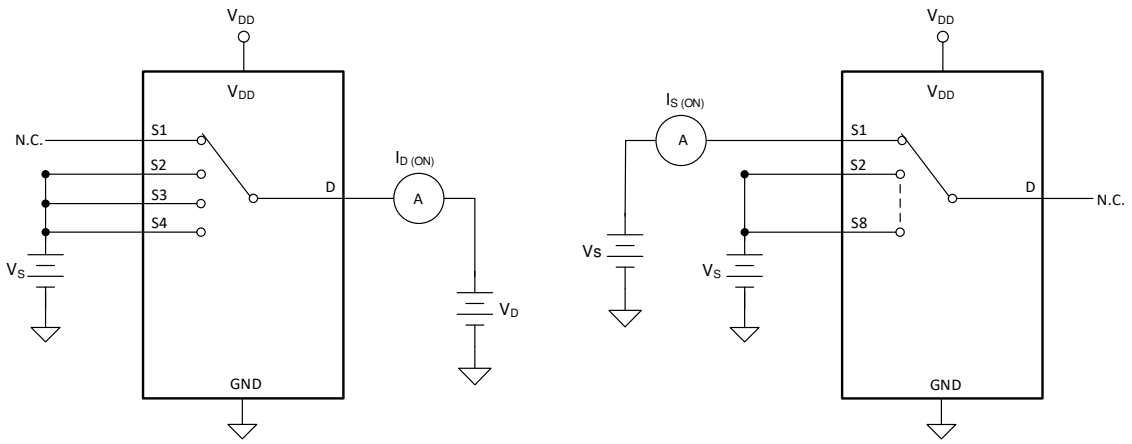

图 9. On-Leakage Measurement Setup

7.4 Transition Time

Transition time is defined as the time taken by the output of the device to rise or fall 10% after the address signal has risen or fallen past the logic threshold. The 10% transition measurement is utilized to provide the timing of the device. System level timing can then account for the time constant added from the load resistance and load capacitance. 图 10 shows the setup used to measure transition time, denoted by the symbol $t_{TRANSITION}$.

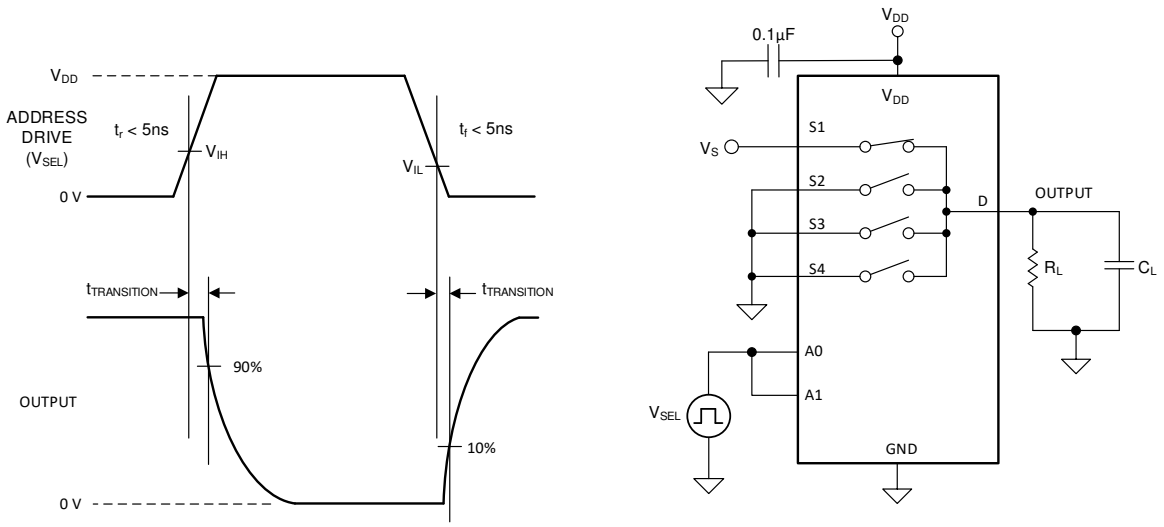

图 10. Transition-Time Measurement Setup

7.5 Break-Before-Make

Break-before-make delay is a safety feature that prevents two inputs from connecting when the device is switching. The output first breaks from the on-state switch before making the connection with the next on-state switch. The time delay between the *break* and the *make* is known as break-before-make delay. 图 11 shows the setup used to measure break-before-make delay, denoted by the symbol $t_{OPEN(BBM)}$.

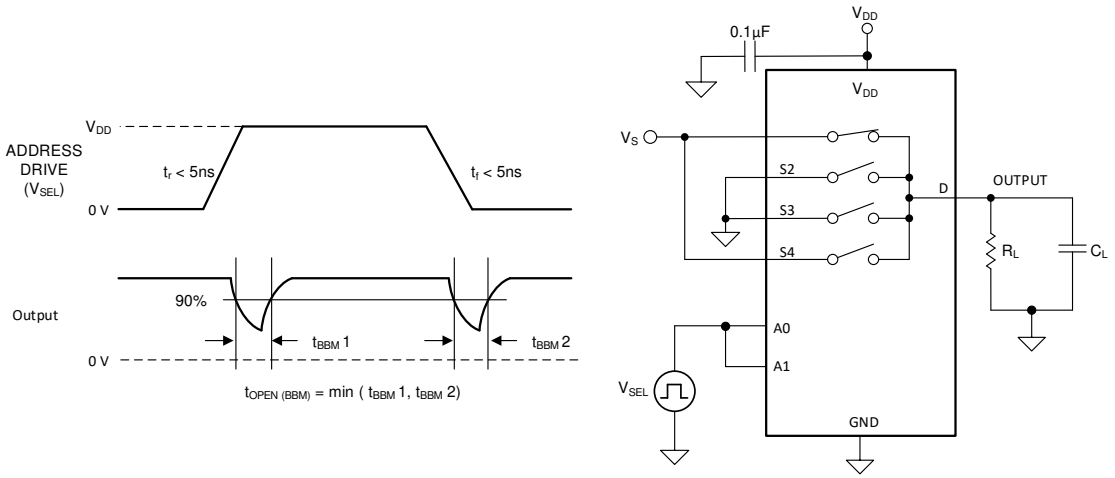

图 11. Break-Before-Make Delay Measurement Setup

7.6 $t_{ON(EN)}$ and $t_{OFF(EN)}$

Turn-on time is defined as the time taken by the output of the device to rise to 10% after the enable has risen past the logic threshold. The 10% measurement is utilized to provide the timing of the device. System level timing can then account for the time constant added from the load resistance and load capacitance. 图 12 shows the setup used to measure turn-on time, denoted by the symbol $t_{ON(EN)}$.

Turn-off time is defined as the time taken by the output of the device to fall to 90% after the enable has fallen past the logic threshold. The 90% measurement is utilized to provide the timing of the device. System level timing can then account for the time constant added from the load resistance and load capacitance. 图 12 shows the setup used to measure turn-off time, denoted by the symbol $t_{OFF(EN)}$.

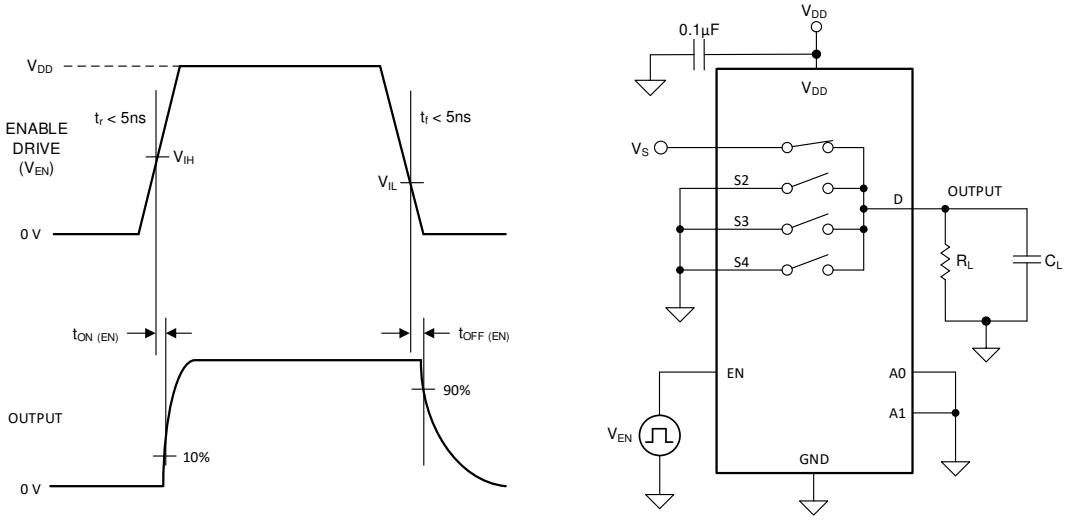

图 12. Turn-On and Turn-Off Time Measurement Setup

版权 © 2019, Texas Instruments Incorporated

7.7 Charge Injection

The TMUX1204 has a transmission-gate topology. Any mismatch in capacitance between the NMOS and PMOS transistors results in a charge injected into the drain or source during the falling or rising edge of the gate signal. The amount of charge injected into the source or drain of the device is known as charge injection, and is denoted by the symbol Q_C. 图 13 shows the setup used to measure charge injection from source (Sx) to drain (D).

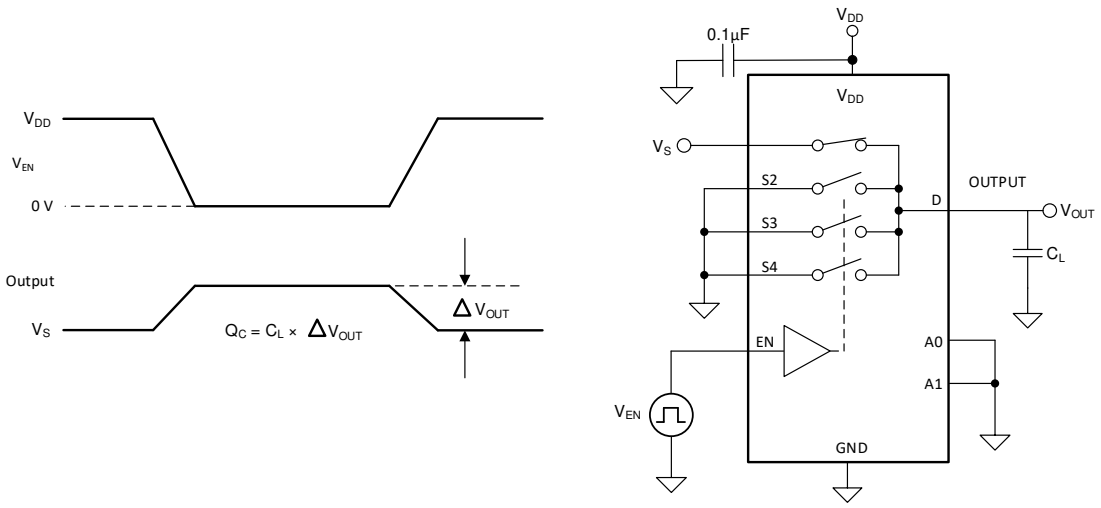

图 13. Charge-Injection Measurement Setup

7.8 Off Isolation

Off isolation is defined as the ratio of the signal at the drain pin (D) of the device when a signal is applied to the source pin (Sx) of an off-channel. 图 14 shows the setup used to measure, and the equation used to calculate off isolation.

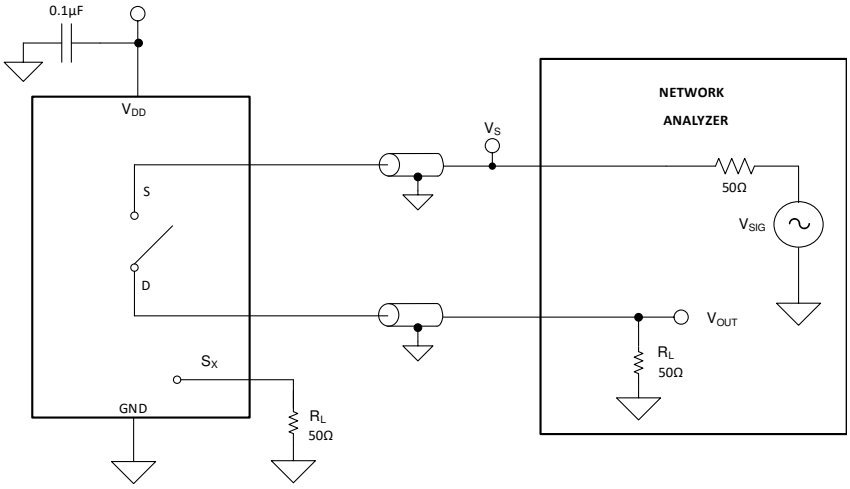

图 14. Off Isolation Measurement Setup

$$\text{Off Isolation} = 20 \cdot \text{Log}\left(\frac{V_{OUT}}{V_S}\right) \tag{1}$$

7.9 Crosstalk

Crosstalk is defined as the ratio of the signal at the drain pin (D) of a different channel, when a signal is applied at the source pin (Sx) of an on-channel. 图 15 shows the setup used to measure, and the equation used to calculate crosstalk.

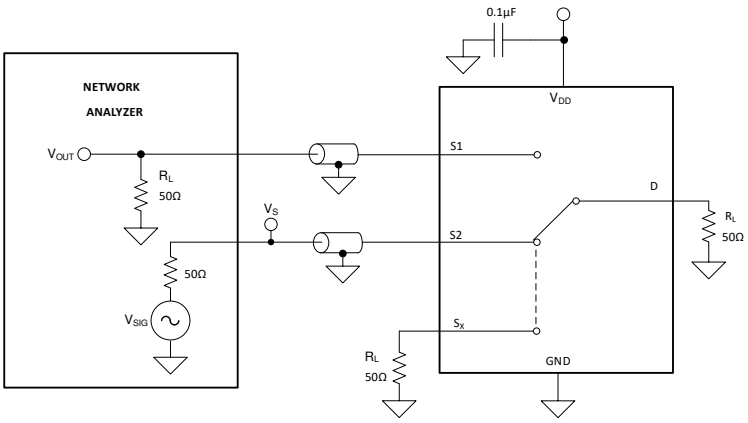

图 15. Crosstalk Measurement Setup

$$\text{Channel-to-Channel Crosstalk} = 20 \cdot \text{Log}\left(\frac{V_{OUT}}{V_S}\right) \tag{2}$$

7.10 Bandwidth

Bandwidth is defined as the range of frequencies that are attenuated by less than 3 dB when the input is applied to the source pin (Sx) of an on-channel, and the output is measured at the drain pin (D) of the device. 图 16 shows the setup used to measure bandwidth.

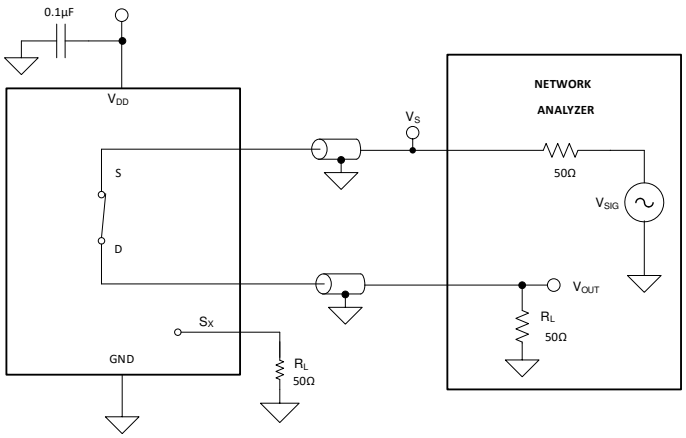

图 16. Bandwidth Measurement Setup

版权 © 2019, Texas Instruments Incorporated

8 Detailed Description

8.1 Functional Block Diagram

The TMUX1204 is a 4:1, single-ended (1-ch.), mux. Each channel is turned on or turned off based on the state of the address lines and the enable pin.

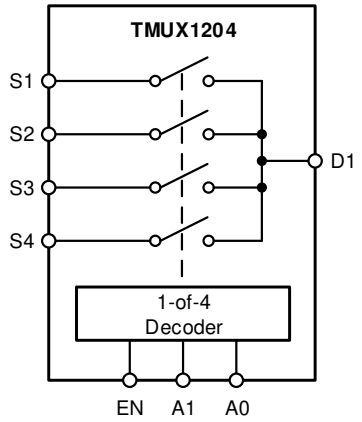

图 17. TMUX1204 Functional Block Diagrams

8.2 Feature Description

8.2.1 Bidirectional Operation

The TMUX1204 conducts equally well from source (Sx) to drain (D) or from drain (D) to source (Sx). Each channel has very similar characteristics in both directions and supports both analog and digital signals.

8.2.2 Rail to Rail Operation

The valid signal path input/output voltage for TMUX1204 ranges from GND to V_{DD}.

8.2.3 1.8 V Logic Compatible Inputs

The TMUX1204 has 1.8-V logic compatible control for all logic control inputs. The logic input thresholds scale with supply but still provide 1.8-V logic control when operating at 5.5 V supply voltage. 1.8-V logic level inputs allows the TMUX1204 to interface with processors that have lower logic I/O rails and eliminates the need for an external translator, which saves both space and BOM cost. For more information on 1.8 V logic implementations refer to *Simplifying Design with 1.8 V logic Muxes and Switches*

8.2.4 Fail-Safe Logic

The TMUX1204 supports Fail-Safe Logic on the control input pins (EN, A0, A1) allowing for operation up to 5.5 V, regardless of the state of the supply pin. This feature allows voltages on the control pins to be applied before the supply pin, protecting the device from potential damage. Fail-Safe Logic minimizes system complexity by removing the need for power supply sequencing on the logic control pins. For example, the Fail-Safe Logic feature allows the select pins of the TMUX1204 to be ramped to 5.5 V while V_{DD} = 0 V. Additionally, the feature enables operation of the TMUX1204 with V_{DD} = 1.2 V while allowing the select pins to interface with a logic level of another device up to 5.5 V.

8.3 Device Functional Modes

When the EN pin of the TMUX1204 is pulled high, one of the switches is closed based on the state of the address lines. When the EN pin is pulled low, all the switches are in an open state irrespective of the state of the address lines. The EN pin can be connected to V_{DD} (as high as 5.5 V).

The TMUX1204 can be operated without any external components except for the supply decoupling capacitors. Unused logic control pins should be tied to GND or V_{DD} in order to ensure the device does not consume additional current as highlighted in *Implications of Slow or Floating CMOS Inputs*. Unused signal path inputs (Sx or D) should be connected to GND.

8.4 Truth Tables

and 表 1 show the truth tables for the TMUX1204, respectively.

表 1. TMUX1204 Truth Table

EN	A1	A0	Selected Channel Connected To Drain (D) Pin
0	X(1)	X(1)	All channels are off
1	0	0	Channel S1
1	0	1	Channel S2
1	1	0	Channel S3
1	1	1	Channel S4

(1) X denotes *don't care*.

版权 © 2019, Texas Instruments Incorporated

9 Application and Implementation

注

Information in the following applications sections is not part of the TI component specification, and TI does not warrant its accuracy or completeness. TI's customers are responsible for determining suitability of components for their purposes. Customers should validate and test their design implementation to confirm system functionality.

9.1 Application Information

The TMUX12xx family offers good system performance across a wide operating supply (1.08V to 5.5V). These devices include 1.8V logic compatible control input pins that enable operation in systems with 1.8V I/O rails. Additionally, the control input pins support Fail-Safe Logic which allows for operation up to 5.5V, regardless of the state of the supply pin. This protection stops the logic pins from back-powering the supply rail. These features make the TMUX12xx a family of general purpose multiplexers and switches that can reduce system complexity, board size, and overall system cost.

9.2 Typical Application

One useful application to take advantage of the TMUX1204 features is multiplexing various signals into an ADC that is integrated into a MCU. Utilizing an integrated ADC in a MCU allows a system to minimize cost with a potential tradeoff of system performance when compared to an external ADC. The multiplexer allows for multiple inputs/sensors to be monitored with a single ADC pin of the device, which is critical in systems with limited I/O.

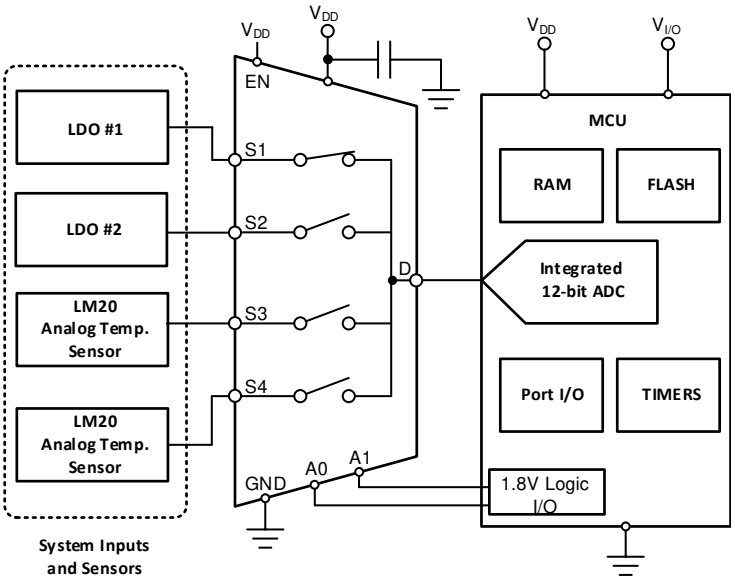

图 18. Multiplexing Signals to Integrated ADC

9.3 Design Requirements

For this design example, use the parameters listed in 表 2.

表 2. Design Parameters

PARAMETERS	VALUES
Supply (V_{DD})	5.0 V
I/O signal range	0 V to V_{DD} (Rail to Rail)
Control logic thresholds	1.8 V compatible

9.4 Detailed Design Procedure

The TMUX1204 can be operated without any external components except for the supply decoupling capacitors. If the parts desired power-up state is disabled, the enable pin should have a weak pull-down resistor and be controlled by the MCU via GPIO. All inputs being muxed to the ADC of the MCU must fall within the recommend operating conditions of the TMUX1204 including signal range and continuous current. For this design with a supply of 5 V the signal range can be 0 V to 5 V and the max continuous current can be 30 mA.

9.5 Application Curve

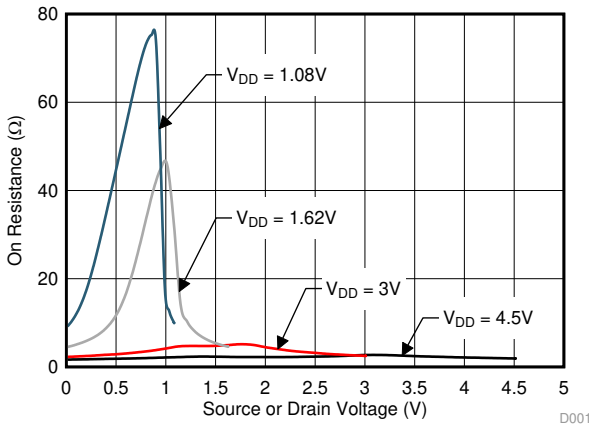

T_A = 25°C

图 19. On-Resistance vs Source or Drain Voltage

10 Power Supply Recommendations

The TMUX1204 operates across a wide supply range of 1.08 V to 5.5 V. Do not exceed the absolute maximum ratings because stresses beyond the listed ratings can cause permanent damage to the devices.

Power-supply bypassing improves noise margin and prevents switching noise propagation from the V_{DD} supply to other components. Good power-supply decoupling is important to achieve optimum performance. For improved supply noise immunity, use a supply decoupling capacitor ranging from 0.1 μF to 10 μF from V_{DD} to ground. Place the bypass capacitors as close to the power supply pins of the device as possible using low-impedance connections. TI recommends using multi-layer ceramic chip capacitors (MLCCs) that offer low equivalent series resistance (ESR) and inductance (ESL) characteristics for power-supply decoupling purposes. For very sensitive systems, or for systems in harsh noise environments, avoiding the use of vias for connecting the capacitors to the device pins may offer superior noise immunity. The use of multiple vias in parallel lowers the overall inductance and is beneficial for connections to ground planes.

版权 © 2019, Texas Instruments Incorporated

11 Layout

11.1 Layout Guidelines

11.1.1 Layout Information

When a PCB trace turns a corner at a 90° angle, a reflection can occur. A reflection occurs primarily because of the change of width of the trace. At the apex of the turn, the trace width increases to 1.414 times the width. This increase upsets the transmission-line characteristics, especially the distributed capacitance and self–inductance of the trace which results in the reflection. Not all PCB traces can be straight and therefore some traces must turn corners.图 20 shows progressively better techniques of rounding corners. Only the last example (BEST) maintains constant trace width and minimizes reflections.

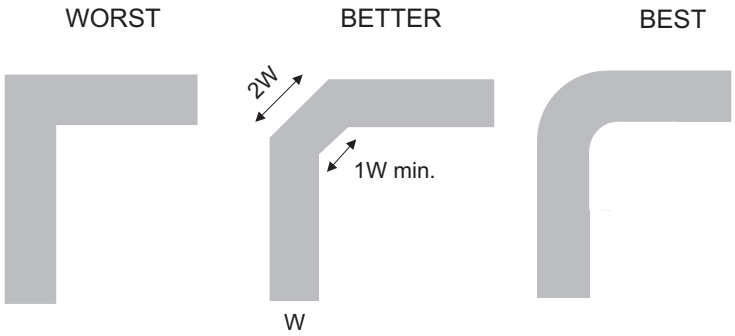

图 20. Trace Example

Route high-speed signals using a minimum of vias and corners which reduces signal reflections and impedance changes. When a via must be used, increase the clearance size around it to minimize its capacitance. Each via introduces discontinuities in the signal's transmission line and increases the chance of picking up interference from the other layers of the board. Be careful when designing test points, through-hole pins are not recommended at high frequencies.

图 21 illustrates an example of a PCB layout with the TMUX1204. Some key considerations are:

- Decouple the V_{DD} pin with a 0.1-µF capacitor, placed as close to the pin as possible. Make sure that the capacitor voltage rating is sufficient for the V_{DD} supply.
- Keep the input lines as short as possible.
- Use a solid ground plane to help reduce electromagnetic interference (EMI) noise pickup.
- Do not run sensitive analog traces in parallel with digital traces. Avoid crossing digital and analog traces if possible, and only make perpendicular crossings when necessary.

11.2 Layout Example

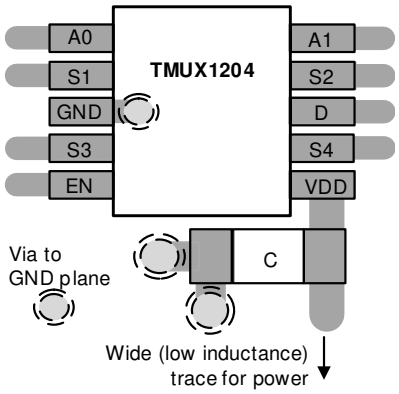

图 21. TMUX1204 Layout Example

12 器件和文档支持

12.1 文档支持

12.1.1 相关文档

德州仪器 (TI)，*《使用 1.8V 逻辑多路复用器和开关简化设计》*。

德州仪器 (TI)，*《QFN/SON PCB 连接》*。

德州仪器 (TI)，*《四方扁平封装无引线逻辑封装》*。

12.2 接收文档更新通知

要接收文档更新通知，请导航至 ti.com. 上的器件产品文件夹。单击右上角的*通知我*进行注册，即可每周接收产品信息更改摘要。有关更改的详细信息，请查看任何已修订文档中包含的修订历史记录。

12.3 社区资源

TI E2E™ support forums are an engineer's go-to source for fast, verified answers and design help — straight from the experts. Search existing answers or ask your own question to get the quick design help you need.

Linked content is provided "AS IS" by the respective contributors. They do not constitute TI specifications and do not necessarily reflect TI's views; see TI's Terms of Use.

12.4 商标

E2E is a trademark of Texas Instruments.

12.5 静电放电警告

ESD 可能会损坏该集成电路。德州仪器 (TI) 建议通过适当的预防措施处理所有集成电路。如果不遵守正确的处理措施和安装程序，可能会损坏集成电路。

ESD 的损坏小至导致微小的性能降级，大至整个器件故障。 精密的集成电路可能更容易受到损坏，这是因为非常细微的参数更改都可能会导致器件与其发布的规格不相符。

12.6 Glossary

SLYZ022 — *TI Glossary*.

This glossary lists and explains terms, acronyms, and definitions.

13 机械、封装和可订购信息

以下页面包含机械、封装和可订购信息。这些信息是指定器件的最新可用数据。数据如有变更，恕不另行通知，且不会对此文档进行修订。如需获取此数据表的浏览器版本，请查阅左侧的导航栏。

版权 © 2019, Texas Instruments Incorporated

重要声明和免责声明

TI 均以“原样”提供技术性及可靠性数据（包括数据表）、设计资源（包括参考设计）、应用或其他设计建议、网络工具、安全信息和其他资源，不保证其中不含任何瑕疵，且不做任何明示或暗示的担保，包括但不限于对适销性、适合某特定用途或不侵犯任何第三方知识产权的暗示担保。

所述资源可供专业开发人员应用TI 产品进行设计使用。您将对以下行为独自承担全部责任：(1) 针对您的应用选择合适的TI 产品；(2) 设计、验证并测试您的应用；(3) 确保您的应用满足相应标准以及任何其他安全、安保或其他要求。所述资源如有变更，恕不另行通知。TI 对您使用所述资源的授权仅限于开发资源所涉及TI 产品的相关应用。除此之外不得复制或展示所述资源，也不提供其它TI或任何第三方的知识产权授权许可。如因使用所述资源而产生任何索赔、赔偿、成本、损失及债务等，TI对此概不负责，并且您须赔偿由此对TI 及其代表造成的损害。

TI 所提供产品均受TI 的销售条款 (http://www.ti.com.cn/zh-cn/legal/termsofsale.html) 以及ti.com.cn上或随附TI产品提供的其他可适用条款的约束。TI提供所述资源并不扩展或以其他方式更改TI 针对TI 产品所发布的可适用的担保范围或担保免责声明。

邮寄地址：上海市浦东新区世纪大道 1568 号中建大厦 32 楼，邮政编码：200122
Copyright © 2019 德州仪器半导体技术（上海）有限公司

PACKAGING INFORMATION

Orderable Device	Status (1)	Package Type	Package Drawing	Pins	Package Qty	Eco Plan (2)	Lead finish/ Ball material (6)	MSL Peak Temp (3)	Op Temp (°C)	Device Marking (4/5)	Samples
TMUX1204DGSR	ACTIVE	VSSOP	DGS	10	2500	RoHS & Green	NIPDAUAG	Level-1-260C-UNLIM	-40 to 125	1F6	Samples
TMUX1204DQAR	ACTIVE	USON	DQA	10	3000	RoHS & Green	NIPDAU	Level-1-260C-UNLIM	-40 to 125	204	Samples

(1) The marketing status values are defined as follows:
ACTIVE: Product device recommended for new designs.
LIFEBUY: TI has announced that the device will be discontinued, and a lifetime-buy period is in effect.
NRND: Not recommended for new designs. Device is in production to support existing customers, but TI does not recommend using this part in a new design.
PREVIEW: Device has been announced but is not in production. Samples may or may not be available.
OBSOLETE: TI has discontinued the production of the device.

(2) **RoHS:** TI defines "RoHS" to mean semiconductor products that are compliant with the current EU RoHS requirements for all 10 RoHS substances, including the requirement that RoHS substance do not exceed 0.1% by weight in homogeneous materials. Where designed to be soldered at high temperatures, "RoHS" products are suitable for use in specified lead-free processes. TI may reference these types of products as "Pb-Free".
RoHS Exempt: TI defines "RoHS Exempt" to mean products that contain lead but are compliant with EU RoHS pursuant to a specific EU RoHS exemption.
Green: TI defines "Green" to mean the content of Chlorine (Cl) and Bromine (Br) based flame retardants meet JS709B low halogen requirements of <=1000ppm threshold. Antimony trioxide based flame retardants must also meet the <=1000ppm threshold requirement.

(3) MSL, Peak Temp. - The Moisture Sensitivity Level rating according to the JEDEC industry standard classifications, and peak solder temperature.

(4) There may be additional marking, which relates to the logo, the lot trace code information, or the environmental category on the device.

(5) Multiple Device Markings will be inside parentheses. Only one Device Marking contained in parentheses and separated by a "~" will appear on a device. If a line is indented then it is a continuation of the previous line and the two combined represent the entire Device Marking for that device.

(6) Lead finish/Ball material - Orderable Devices may have multiple material finish options. Finish options are separated by a vertical ruled line. Lead finish/Ball material values may wrap to two lines if the finish value exceeds the maximum column width.

Important Information and Disclaimer: The information provided on this page represents TI's knowledge and belief as of the date that it is provided. TI bases its knowledge and belief on information provided by third parties, and makes no representation or warranty as to the accuracy of such information. Efforts are underway to better integrate information from third parties. TI has taken and continues to take reasonable steps to provide representative and accurate information but may not have conducted destructive testing or chemical analysis on incoming materials and chemicals. TI and TI suppliers consider certain information to be proprietary, and thus CAS numbers and other limited information may not be available for release.

In no event shall TI's liability arising out of such information exceed the total purchase price of the TI part(s) at issue in this document sold by TI to Customer on an annual basis.

TAPE AND REEL INFORMATION

REEL DIMENSIONS

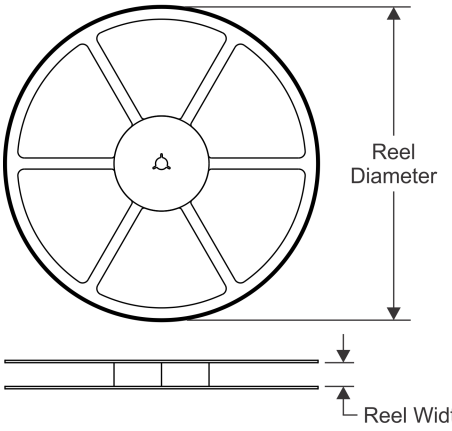

TAPE DIMENSIONS

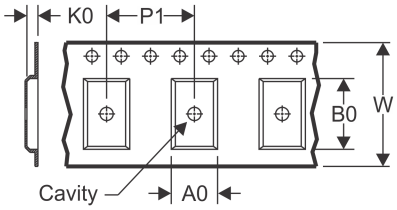

A0	Dimension designed to accommodate the component width
B0	Dimension designed to accommodate the component length
K0	Dimension designed to accommodate the component thickness
W	Overall width of the carrier tape
P1	Pitch between successive cavity centers

QUADRANT ASSIGNMENTS FOR PIN 1 ORIENTATION IN TAPE

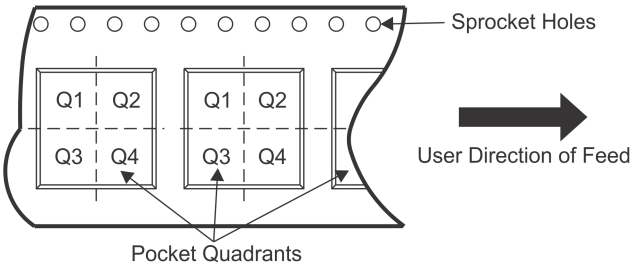

*All dimensions are nominal

Device	Package Type	Package Drawing	Pins	SPQ	Reel Diameter (mm)	Reel Width W1 (mm)	A0 (mm)	B0 (mm)	K0 (mm)	P1 (mm)	W (mm)	Pin1 Quadrant
TMUX1204DGSR	VSSOP	DGS	10	2500	330.0	12.4	5.3	3.4	1.4	8.0	12.0	Q1
TMUX1204DQAR	USON	DQA	10	3000	180.0	9.5	1.18	2.68	0.72	4.0	8.0	Q1

TAPE AND REEL BOX DIMENSIONS

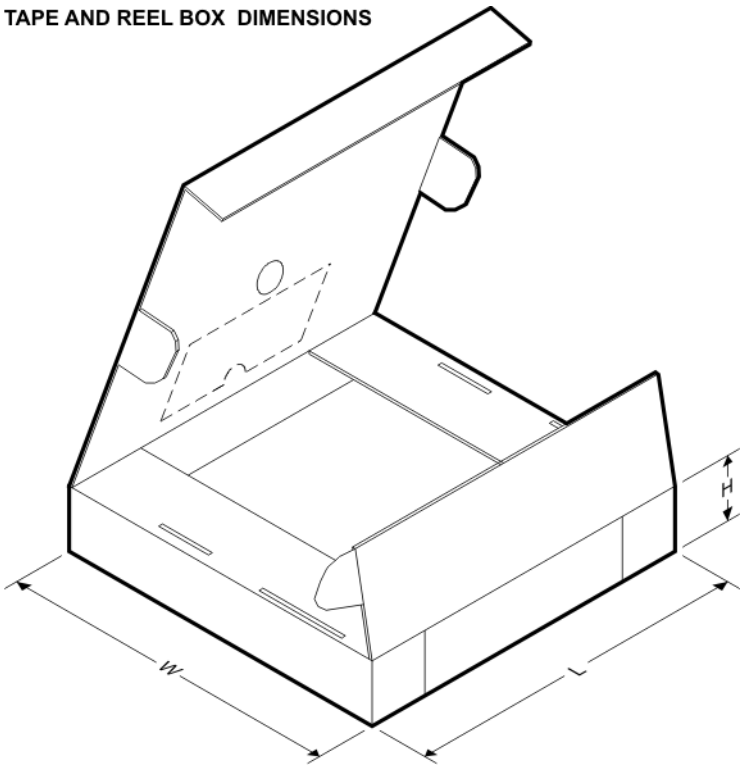

*All dimensions are nominal

Device	Package Type	Package Drawing	Pins	SPQ	Length (mm)	Width (mm)	Height (mm)
TMUX1204DGSR	VSSOP	DGS	10	2500	364.0	364.0	27.0
TMUX1204DQAR	USON	DQA	10	3000	189.0	185.0	36.0

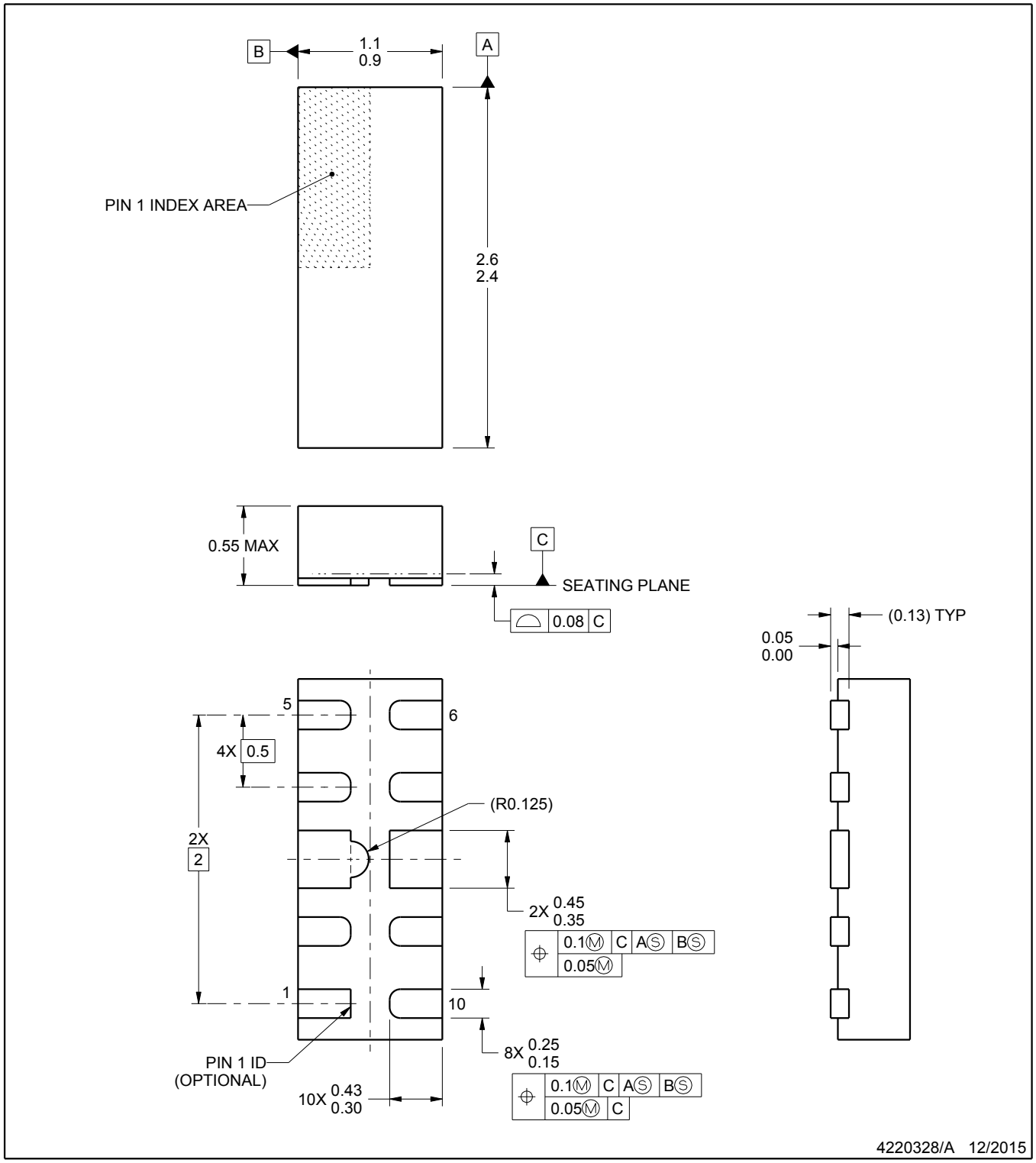

NOTES:

1. All linear dimensions are in millimeters. Any dimensions in parenthesis are for reference only. Dimensioning and tolerancing per ASME Y14.5M.
2. This drawing is subject to change without notice.

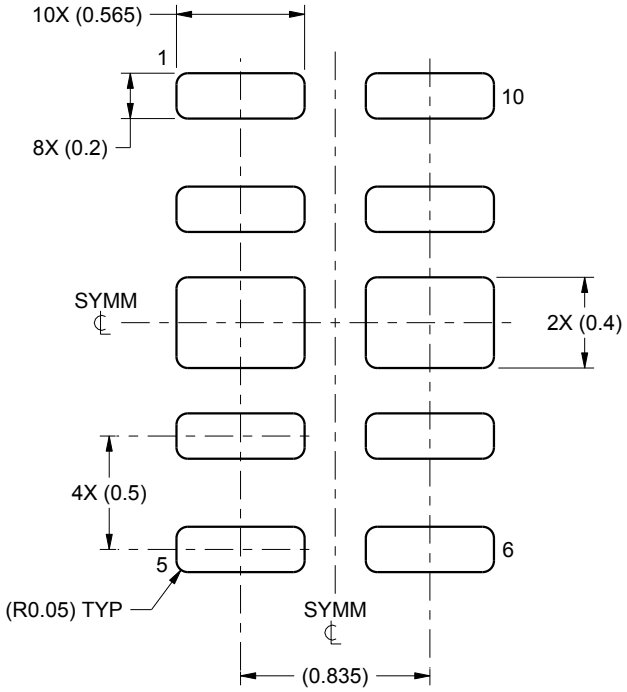

LAND PATTERN EXAMPLE
SCALE:30X

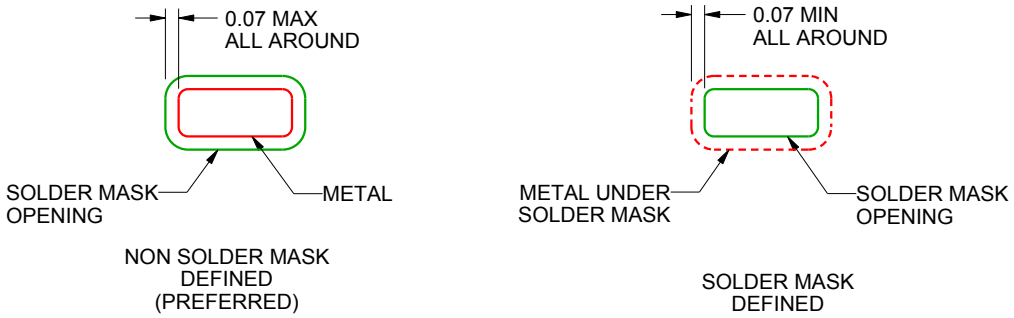

SOLDER MASK DETAILS

4220328/A 12/2015

NOTES: (continued)

3. For more information, see Texas Instruments literature number SLUA271 (www.ti.com/lit/slua271).

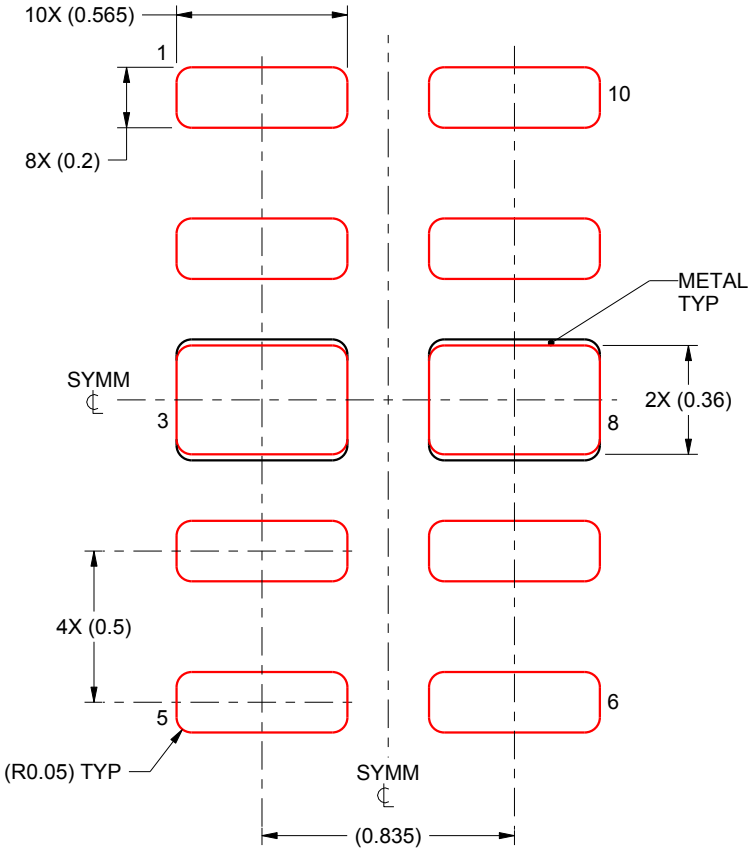

SOLDER PASTE EXAMPLE
BASED ON 0.1 mm THICK STENCIL

EXPOSED PADS 3 & 8:
90% PRINTED SOLDER COVERAGE BY AREA UNDER PACKAGE
SCALE:40X

4220328/A 12/2015

NOTES: (continued)

4. Laser cutting apertures with trapezoidal walls and rounded corners may offer better paste release. IPC-7525 may have alternate design recommendations.

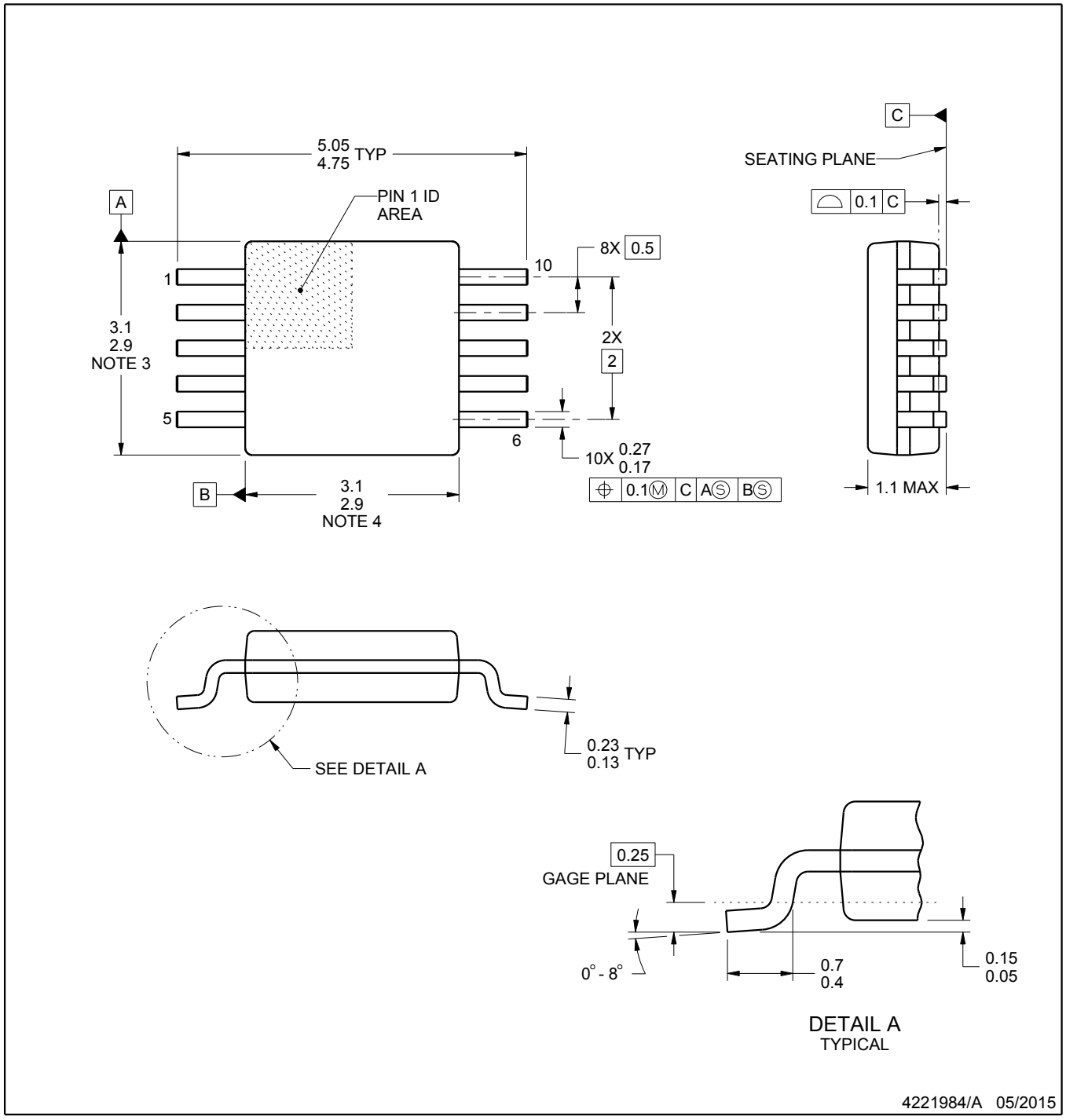

NOTES:

1. All linear dimensions are in millimeters. Any dimensions in parenthesis are for reference only. Dimensioning and tolerancing per ASME Y14.5M.
2. This drawing is subject to change without notice.
3. This dimension does not include mold flash, protrusions, or gate burrs. Mold flash, protrusions, or gate burrs shall not exceed 0.15 mm per side.
4. This dimension does not include interlead flash. Interlead flash shall not exceed 0.25 mm per side.
5. Reference JEDEC registration MO-187, variation BA.

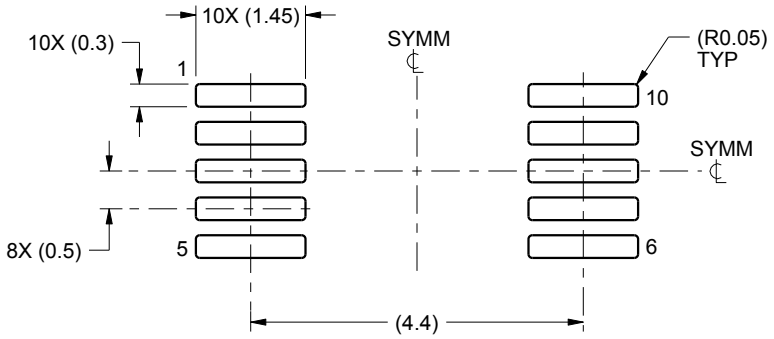

LAND PATTERN EXAMPLE
SCALE:10X

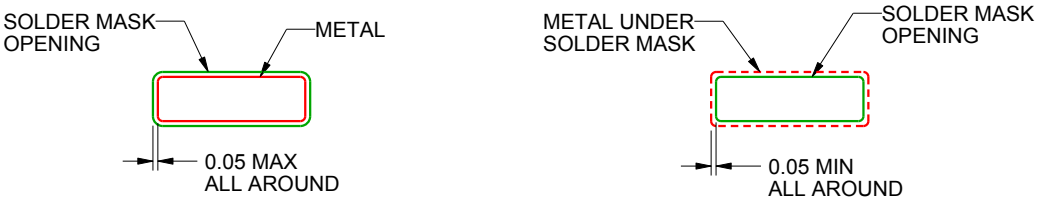

NON SOLDER MASK
DEFINED

SOLDER MASK
DEFINED

SOLDER MASK DETAILS
NOT TO SCALE

4221984/A 05/2015

NOTES: (continued)

6. Publication IPC-7351 may have alternate designs.
7. Solder mask tolerances between and around signal pads can vary based on board fabrication site.

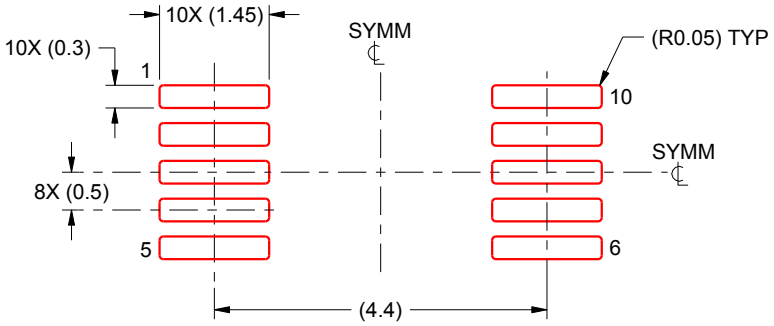

SOLDER PASTE EXAMPLE
BASED ON 0.125 mm THICK STENCIL
SCALE:10X

4221984/A 05/2015

NOTES: (continued)

8. Laser cutting apertures with trapezoidal walls and rounded corners may offer better paste release. IPC-7525 may have alternate design recommendations.
9. Board assembly site may have different recommendations for stencil design.

重要声明和免责声明

TI 均以“原样”提供技术性及可靠性数据（包括数据表）、设计资源（包括参考设计）、应用或其他设计建议、网络工具、安全信息和其他资源，不保证其中不含任何瑕疵，且不做任何明示或暗示的担保，包括但不限于对适销性、适合某特定用途或不侵犯任何第三方知识产权的暗示担保。

所述资源可供专业开发人员应用TI 产品进行设计使用。您将对以下行为独自承担全部责任：(1) 针对您的应用选择合适的TI 产品；(2) 设计、验证并测试您的应用；(3) 确保您的应用满足相应标准以及任何其他安全、安保或其他要求。所述资源如有变更，恕不另行通知。TI 对您使用所述资源的授权仅限于开发资源所涉及TI 产品的相关应用。除此之外不得复制或展示所述资源，也不提供其它TI或任何第三方的知识产权授权许可。如因使用所述资源而产生任何索赔、赔偿、成本、损失及债务等，TI对此概不负责，并且您须赔偿由此对TI 及其代表造成的损害。

TI 所提供产品均受TI 的销售条款 (http://www.ti.com.cn/zh-cn/legal/termsofsale.html) 以及ti.com.cn上或随附TI产品提供的其他可适用条款的约束。TI提供所述资源并不扩展或以其他方式更改TI 针对TI 产品所发布的可适用的担保范围或担保免责声明。

邮寄地址：上海市浦东新区世纪大道 1568 号中建大厦 32 楼，邮政编码：200122
Copyright © 2020 德州仪器半导体技术（上海）有限公司