bq27421-G1 系统端 Impedance Track™ 电量计，此电量计具有集成感测电阻器

1 特性

- 单节串联锂离子电池电量计
  - 驻留在系统主板上
  - 支持嵌入式或可拆除电池
  - 由具有集成低压降稳压器 (LDO) 的电池直接供电
  - 低值集成感测电阻器（典型值 7mΩ）
- 基于已获得专利的 Impedance Track™ 技术，可轻松配置电池电量计量
  - 用平滑滤波器报告剩余电量和充电状态 (SOC)
  - 针对电池老化、温度和速率变化进行自动调节
  - 电池运行状态（老化）估算
- 微控制器外设支持：
  - 400kHz I^2C 串口
  - 可配置的 SOC 中断或电池低电量数字输出报警
  - 内部温度传感器或主机报告温度

2 应用

- 智能手机、功能型手机和平板电脑
- 数码相机与视频摄像机
- 手持式终端
- MP3 或多媒体播放器

3 说明

德州仪器 (TI) bq27421-G1 电量计是一款可轻松配置的微控制器外设，可针对单节锂离子电池提供系统端电量计量。 此器件对用户配置和系统微控制器固件开发的要求极低。

此款电量计采用针对电量计量、已获专利的 Impedance Track™ 算法，可提供诸如剩余电池容量 (mAh)、充电状态 (%) 和电池电压 (mV) 等信息。

通过 bq27421-G1 电量计进行电池电量监测只需将 PACK+ (P+) 与 PACK- (P-) 连接至可拆卸电池组或嵌入式电池电路。 微型 9 球、1.62mm × 1.58mm 尺寸、0.5mm 间距的 NanoFree™ 芯片级封装 (DSBGA) 是空间受限类应用的理想选择。

器件信息 (1)

器件名称	封装	封装尺寸（标称值）
bq27421-G1	DSBGA (9)	1.62mm x 1.58mm

(1) 要了解所有可用封装，请见数据表末尾的可订购产品附录。

4 简化电路原理图

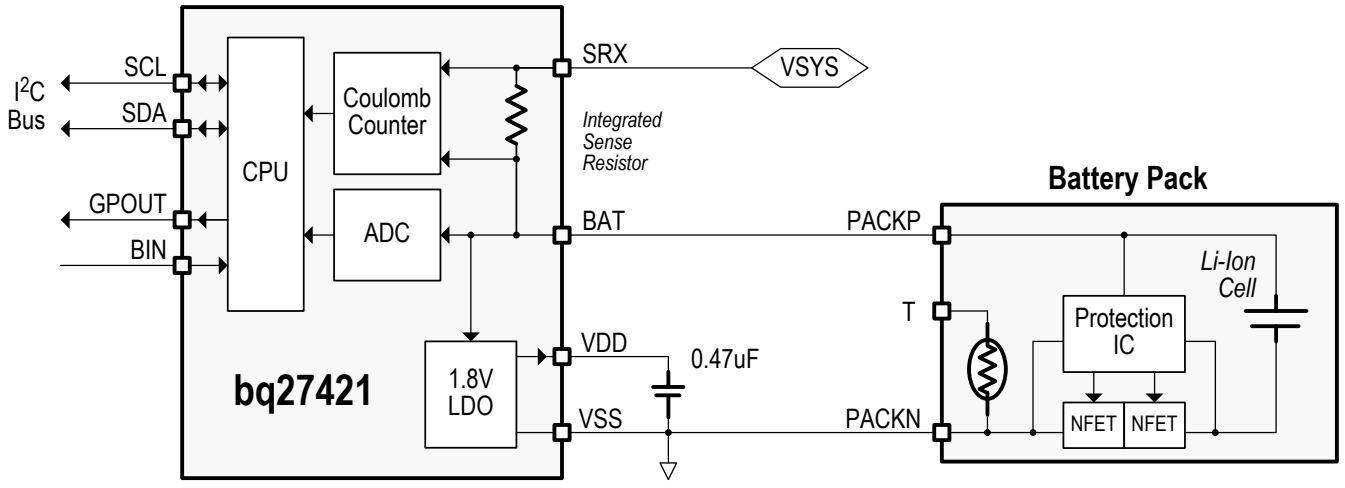

PRODUCTION DATA information is current as of publication date. Products conform to specifications per the terms of the Texas Instruments standard warranty. Production processing does not necessarily include testing of all parameters.

目录

1 特性 ... 1
2 应用 ... 1
3 说明 ... 1
4 简化电路原理图 ... 1
5 修订历史记录 ... 2
6 **Device Comparison Table** ... 3
7 **Pin Configuration and Functions** ... 3
8 **Specifications** ... 4
8.1 Absolute Maximum Ratings ... 4
8.2 Handling Ratings ... 4
8.3 Recommended Operating Conditions ... 4
8.4 Thermal Information ... 5
8.5 Supply Current ... 5
8.6 Digital Input and Output DC Characteristics ... 5
8.7 LDO Regulator, Wake-up, and Auto-shutdown DC Characteristics ... 5
8.8 ADC (Temperature and Cell Measurement) Characteristics ... 6
8.9 Integrating ADC (Coulomb Counter) Characteristics ... 6
8.10 Integrated Sense Resistor Characteristics ... 6
8.11 I^2C-Compatible Interface Communication Timing Characteristics ... 7
9 **Detailed Description** ... 8
9.1 Overview ... 8
9.2 Functional Block Diagram ... 8
9.3 Feature Description ... 8
9.4 Device Functional Modes ... 9
9.5 Programming ... 9
10 **Application and Implementation** ... 13
10.1 Typical Application ... 13
11 **Power Supply Recommendation** ... 14
11.1 Power Supply Decoupling ... 14
12 **Layout** ... 15
12.1 Layout Guidelines ... 15
12.2 Layout Example ... 15
13 器件和文档支持 ... 16
13.1 文档支持 ... 16
13.2 商标 ... 16
13.3 静电放电警告 ... 16
13.4 术语表 ... 16
14 机械封装和可订购信息 ... 16

5 修订历史记录

Changes from Original (May 2013) to Revision A **Page**

- 已添加 器件信息表 ... 1
- Changed $LiMnO_4$ to $LiCoO_2$ ... 3
- Added bq27421-G1D device to data sheet ... 3
- Updated BIN pin description ... 3
- Updated GPOUT pin description ... 3
- Added Handling Ratings ... 4
- Added *RemainingCapacityUnfiltered( )*, *RemainingCapacityFiltered( )*, *FullChargeCapacityUnfiltered( )*, *FullChargeCapacityFlitered( )*, and *StateOfChargeUnfiltered( )* to Table 1 ... 9
- Added EXIT_CFGUPDATE and EXIT_RESIM subcommands to Table 2 ... 10
- Changed Chem_ID description ... 10

Copyright © 2013–2014, Texas Instruments Incorporated

6 Device Comparison Table

PART NUMBER	BATTERY TYPE	CHEM_ID (1)	PACKAGE (2)	COMMUNICATION FORMAT
bq27421YZFR-G1A	$LiCoO_2$ (4.2 V maximum charge)	0x128	CSP-9	I^2C
bq27421YZFT-G1A				
bq27421YZFR-G1B	$LiCoO_2$ (4.3 to 4.35 V maximum charge)	0x312		
bq27421YZFT-G1B				
bq27421YZFR-G1D	$LiCoO_2$ (4.3 to 4.4 V maximum charge)	0x3142		
bq27421YZFT-G1D				

(1) See the *CHEM_ID* subcommand to confirm the battery chemistry type.
(2) For the most current package and ordering information see the Package Option Addendum at the end of this document; or, see the TI website at www.ti.com.

7 Pin Configuration and Functions

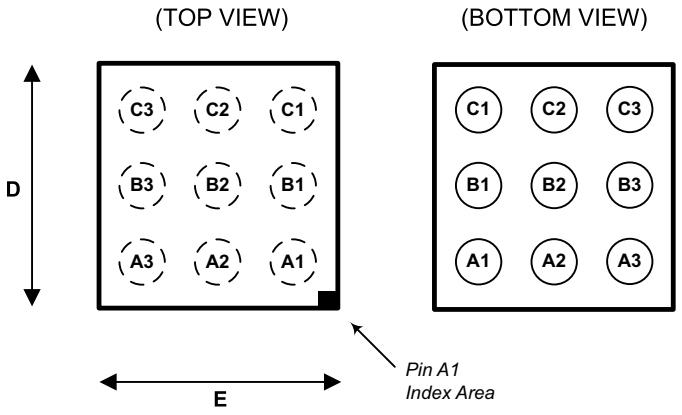

DIM	MIN	TYP	MAX	UNITS
D	1590	1620	1650	µm
E	1550	1580	1610	

Pin Functions

PIN		TYPE(1)	DESCRIPTION
NAME	NUMBER		
BAT	C3	PI, AI	LDO regulator input, battery voltage input, and coulomb counter input typically connected to the PACK+ terminal.
BIN	B1	DI	Battery insertion detection input. If ***Operation Configuration*** bit ***[BIE]*** = 1 (default), a logic low on the pin is detected as battery insertion. For a removable pack, the BIN pin can be connected to V_{SS} through a pulldown resistor on the pack, typically the 10-kΩ thermistor; the system board should use a 1.8-MΩ pullup resistor to V_{DD} to ensure the BIN pin is high when a battery is removed. If the battery is embedded in the system, it is recommended to leave ***[BIE]*** = 1 and use a 10-kΩ pulldown resistor from BIN to V_{SS}. If ***[BIE]*** = 0, then the host must inform the gauge of battery insertion and removal with the *BAT_INSERT* and *BAT_REMOVE* subcommands. A 10-kΩ pulldown resistor should be placed between BIN and V_{SS}, even if this pin is unused. **NOTE:** The BIN pin must not be shorted directly to V_{CC} or V_{SS} and any pullup resistor on the BIN pin must be connected only to V_{DD} and not an external voltage rail.
GPOUT	A1	DO	This open-drain output can be configured to indicate BAT_LOW when the ***Operation Configuration [BATLOWEN]*** bit is set. By default ***[BATLOWEN]*** is cleared and this pin performs an interrupt function (SOC_INT) by pulsing for specific events, such as a change in State of Charge. Signal polarity for these functions is controlled by the ***[GPIOPOL]*** configuration bit. This pin should not be left floating, even if unused, so a 10-kΩ pullup resistor is recommended.

(1) IO = Digital input-output, AI = Analog input, P = Power connection

Copyright © 2013–2014, Texas Instruments Incorporated

Pin Functions (continued)

PIN		TYPE(1)	DESCRIPTION
NAME	NUMBER		
SCL	A3	DIO	Slave I²C serial bus for communication with system (Master). Open-drain pins. Use with external 10-kΩ pullup resistors (typical) for each pin. If the external pullup resistors will be disconnected from these pins during normal operation, recommend using external 1-MΩ pulldown resistors to V_{SS} at each pin to avoid floating inputs.
SDA	A2	DIO	
SRX	C2	AI	Integrated high-side sense resistor and coulomb counter input typically connected to system power rail VSYS.
V_{DD}	B3	PO	1.8-V Regulator Output. Decouple with 0.47-µF ceramic capacitor to V_{SS}. This pin is not intended to provide power for other devices in the system.
V_{SS}	B2, C1	PI	Ground pins. The center pin B2 is the actual device ground pin while pin C1 is floating internally and therefore C1 may be used as a bridge to connect to the board ground plane without requiring a via under the device package. Recommend routing the center pin B2 to the corner pin C1 using a top-layer metal trace on the board. Then route the corner pin C1 to the board ground plane.

8 Specifications

8.1 Absolute Maximum Ratings

over operating free-air temperature range (unless otherwise noted)(1)

PARAMETER		MIN	MAX	UNIT
V_{BAT}	BAT pin input voltage range	–0.3	6	V
V_{SRX}	SRX pin input voltage range	V_{BAT} – 0.3	V_{BAT} + 0.3	V
V_{DD}	V_{DD} pin supply voltage range (LDO output)	–0.3	2	V
V_{IOD}	Open-drain IO pins (SDA, SCL, GPOUT)	–0.3	6	V
V_{IOPP}	Push-pull IO pins (BIN)	–0.3	V_{DD} + 0.3	V
T_A	Operating free-air temperature range	–40	85	°C

(1) Stresses beyond those listed under "absolute maximum ratings" may cause permanent damage to the device. These are stress ratings only, and functional operation of the device at these or any other conditions beyond those indicated under "recommended operating conditions" is not implied. Exposure to absolute-maximum-rated conditions for extended periods may affect device reliability.

8.2 Handling Ratings

			MIN	MAX	UNIT
T_{stg}	Storage temperature range		–65	150	°C
$V_{(ESD)}$	Electrostatic discharge	Human body model (HBM), per ANSI/ESDA/JEDEC JS-001, all pins(1)	–1.5	1.5	kV
		Charged device model (CDM), per JEDEC specification JESD22-C101, all pins(2)	–250	250	V

(1) JEDEC document JEP155 states that 500-V HBM allows safe manufacturing with a standard ESD control process.
(2) JEDEC document JEP157 states that 250-V CDM allows safe manufacturing with a standard ESD control process.

8.3 Recommended Operating Conditions

T_A = 30°C and V_{REGIN} = V_{BAT} = 3.6V (unless otherwise noted)

PARAMETER		TEST CONDITIONS	MIN	TYP	MAX	UNIT
C_{BAT}(1)	External input capacitor for internal LDO between BAT and V_{SS}	Nominal capacitor values specified. Recommend a 5% ceramic X5R-type capacitor located close to the device.		0.1		µF
C_{LDO18} (1)	External output capacitor for internal LDO between V_{DD} and V_{SS}			0.47		µF
V_{PU} (1)	External pull-up voltage for open-drain pins (SDA, SCL, GPOUT)		1.62		3.6	V

(1) Specified by design. Not production tested.

Copyright © 2013–2014, Texas Instruments Incorporated

8.4 Thermal Information

over operating free-air temperature range (unless otherwise noted)

THERMAL METRIC(1)		bq27421-G1 YZF (9 PINS)	UNIT
$R_{\theta JA}$	Junction-to-ambient thermal resistance	107.8	°C/W
$R_{\theta JCtop}$	Junction-to-case (top) thermal resistance	0.7	
$R_{\theta JB}$	Junction-to-board thermal resistance	60.4	
ψ_{JT}	Junction-to-top characterization parameter	3.5	
ψ_{JB}	Junction-to-board characterization parameter	60.4	
$R_{\theta JCbot}$	Junction-to-case (bottom) thermal resistance	NA	

(1) For more information about traditional and new thermal metrics, see the IC Package Thermal Metrics application report, SPRA953

8.5 Supply Current

T_A = 30°C and V_{REGIN} = V_{BAT} = 3.6 V (unless otherwise noted)

PARAMETER		TEST CONDITIONS	MIN	TYP	MAX	UNIT
I_{CC} (1)	NORMAL mode current	I_{LOAD} > ***Sleep Current*** (2)		93		µA
I_{SLP} (1)	SLEEP mode current	I_{LOAD} < ***Sleep Current*** (2)		21		µA
I_{HIB} (1)	HIBERNATE mode current	I_{LOAD} < ***Hibernate Current*** (2)		9		µA
I_{SD} (1)	SHUTDOWN mode current	Fuel gauge in host commanded SHUTDOWN mode (LDO regulator output disabled)		0.6		µA

(1) Specified by design. Not production tested.
(2) Wake Comparator Disabled.

8.6 Digital Input and Output DC Characteristics

T_A = –40°C to 85°C, typical values at T_A = 30°C and V_{REGIN} = 3.6 V (unless otherwise noted)

PARAMETER		TEST CONDITIONS	MIN	TYP	MAX	UNIT
$V_{IH(OD)}$	Input voltage, high (2)	External pullup resistor to V_{PU}	V_{PU} × 0.7			V
V_{IL}	Input voltage, low (2) (3)				0.6	V
V_{OL}	Output voltage, low (2)				0.6	V
I_{OH}	Output source current, high (2) (3)				0.5	mA
$I_{OL(OD)}$	Output sink current, low (2)				–3	mA
C_{IN} (1)	Input capacitance (2) (3)				5	pF
I_{lkg}	Input leakage current (SCL, SDA, BIN)				0.1	µA
	Input leakage current (GPOUT)				1	

(1) Specified by design. Not production tested.
(2) Open Drain pins: (SCL, SDA, GPOUT)
(3) Push-pull pin: (BIN)

8.7 LDO Regulator, Wake-up, and Auto-shutdown DC Characteristics

T_A = –40°C to 85°C, typical values at T_A = 30°C and V_{REGIN} = 3.6 V (unless otherwise noted)

PARAMETER		TEST CONDITIONS	MIN	TYP	MAX	UNIT
V_{BAT}	BAT pin regulator input		2.45		4.5	V
V_{DD}	Regulator output voltage			1.8		V
$UVLO_{IT+}$	V_{BAT} undervoltage lockout LDO wake-up rising threshold			2		V
$UVLO_{IT-}$	V_{BAT} undervoltage lockout LDO auto-shutdown falling threshold			1.95		V

(1) Specified by design. Not production tested.

Copyright © 2013–2014, Texas Instruments Incorporated

8.8 ADC (Temperature and Cell Measurement) Characteristics

T_A = –40°C to 85°C; typical values at T_A = 30°C and V_{REGIN} = 3.6 V (unless otherwise noted)

PARAMETER		TEST CONDITIONS	MIN	TYP	MAX	UNIT
$V_{IN(BAT)}$	BAT pin voltage measurement range.	Voltage divider enabled.	2.45		4.5	V
t_{ADC_CONV}	Conversion time			125		ms
	Effective resolution			15		bits

(1) Specified by design. Not tested in production.

8.9 Integrating ADC (Coulomb Counter) Characteristics

T_A = –40°C to 85°C; typical values at T_A = 30°C and V_{REGIN} = 3.6 V (unless otherwise noted)

PARAMETER		TEST CONDITIONS	MIN	TYP	MAX	UNIT
V_{SR}	Input voltage range from BAT to SRX pins			BAT ± 25		mV
t_{SR_CONV}	Conversion time	Single conversion		1		s
	Effective Resolution	Single conversion		16		bits

(1) Assured by design. Not tested in production.

8.10 Integrated Sense Resistor Characteristics

T_A = –40°C to 85°C; typical values at T_A = 30°C and V_{REGIN} = 3.6 V (unless otherwise noted)

PARAMETER		TEST CONDITIONS	MIN	TYP	MAX	UNIT
SRX_{RES} (2)	Resistance of Integrated Sense Resistor from SRX to V_{SS}.	T_A = 30°C		7		mΩ
I_{SRX} (1)	Recommended Sense Resistor input current.	Long term RMS, average device utilization			2000	mA
		Peak RMS current, 10% device utilization(3)			2500	mA
		Peak pulsed current, 250 ms maximum, 1% device utilization(3)			3500	mA

(1) Specified by design. Not tested in production.
(2) Firmware compensation applied for temperature coefficient of resistor.
(3) Device utilization is the long term usage profile at a specific condition compared to the average condition.

Copyright © 2013–2014, Texas Instruments Incorporated

8.11 I²C-Compatible Interface Communication Timing Characteristics

T_A = –40°C to 85°C; typical values at T_A = 30°C and V_{REGIN} = 3.6 V (unless otherwise noted)

PARAMETER		TEST CONDITIONS	MIN	TYP	MAX	UNIT
Standard Mode (100 kHz)						
$t_{d(STA)}$	Start to first falling edge of SCL		4			µs
$t_{w(L)}$	SCL pulse duration (low)		4.7			µs
$t_{w(H)}$	SCL pulse duration (high)		4			µs
$t_{su(STA)}$	Setup for repeated start		4.7			µs
$t_{su(DAT)}$	Data setup time	Host drives SDA	250			ns
$t_{h(DAT)}$	Data hold time	Host drives SDA	0			ns
$t_{su(STOP)}$	Setup time for stop		4			µs
$t_{(BUF)}$	Bus free time between stop and start	Includes Command Waiting Time	66			µs
t_f	SCL or SDA fall time (1)				300	ns
t_r	SCL or SDA rise time (1)				300	ns
f_{SCL}	Clock frequency (2)				100	kHz
Fast Mode (400 kHz)						
$t_{d(STA)}$	Start to first falling edge of SCL		600			ns
$t_{w(L)}$	SCL pulse duration (low)		1300			ns
$t_{w(H)}$	SCL pulse duration (high)		600			ns
$t_{su(STA)}$	Setup for repeated start		600			ns
$t_{su(DAT)}$	Data setup time	Host drives SDA	100			ns
$t_{h(DAT)}$	Data hold time	Host drives SDA	0			ns
$t_{su(STOP)}$	Setup time for stop		600			ns
$t_{(BUF)}$	Bus free time between stop and start	Includes Command Waiting Time	66			µs
t_f	SCL or SDA fall time (1)				300	ns
t_r	SCL or SDA rise time (1)				300	ns
f_{SCL}	Clock frequency (2)				400	kHz

(1) Specified by design. Not production tested.
(2) If the clock frequency (f_{SCL}) is > 100 kHz, use 1-byte write commands for proper operation. All other transactions types are supported at 400 kHz. (See and)

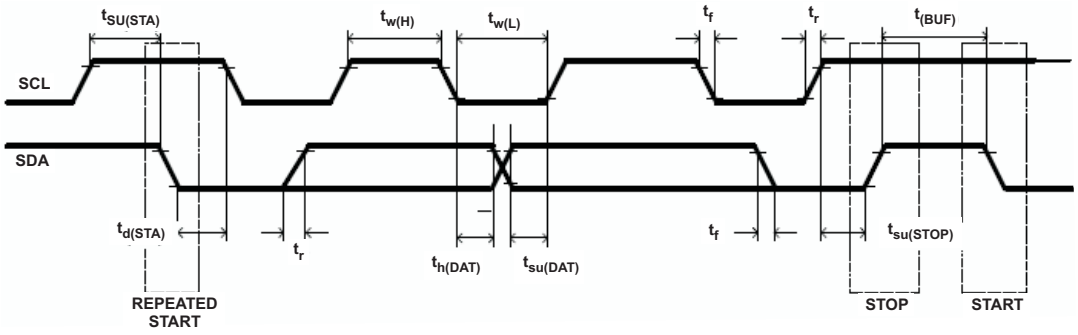

Figure 1. I²C-Compatible Interface Timing Diagrams

Copyright © 2013–2014, Texas Instruments Incorporated

9 Detailed Description

9.1 Overview

The fuel gauge accurately predicts the battery capacity and other operational characteristics of a single Li-based rechargeable cell. It can be interrogated by a system processor to provide cell information, such as state-of-charge (SOC).

NOTE

The following formatting conventions are used in this document:

Commands: *italics* with parentheses( ) and no breaking spaces, for example, *Control( )*

Data Flash: *italics*, **bold**, and breaking spaces, for example, ***Design Capacity***

Register bits and flags: *italics* with brackets [ ], for example, *[TDA]*

Data Flash bits: *italics*, **bold**, and brackets [ ], for example, ***[LED1]***

Modes and states: ALL CAPITALS, for example, UNSEALED mode

9.2 Functional Block Diagram

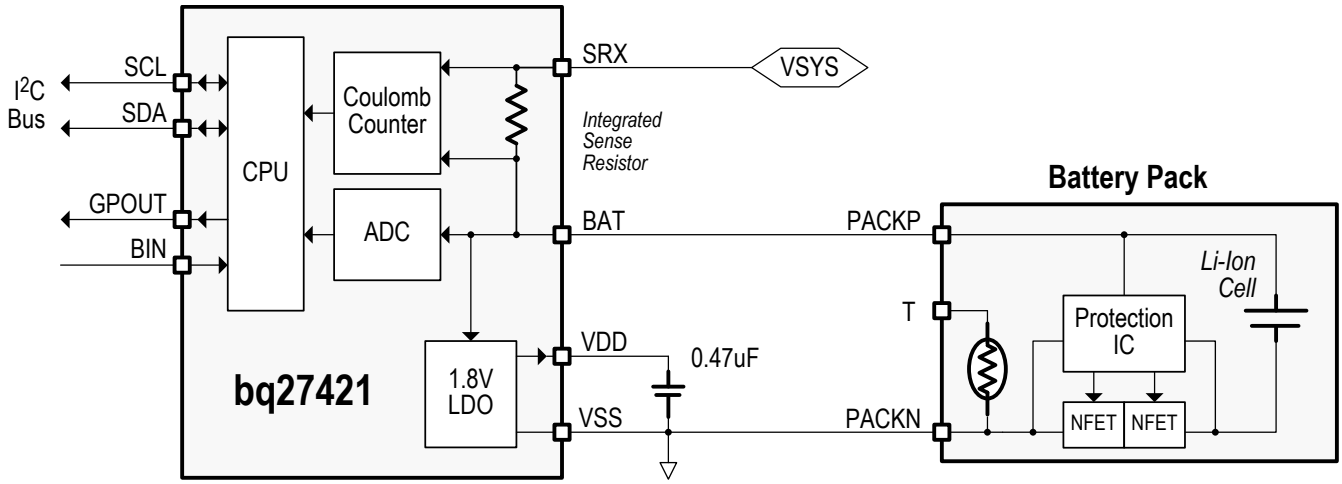

9.3 Feature Description

Information is accessed through a series of commands, called *Standard Commands*. Further capabilities are provided by the additional *Extended Commands* set. Both sets of commands, indicated by the general format *Command( )*, are used to read and write information contained within the control and status registers, as well as its data locations. Commands are sent from system to gauge using the I^2C serial communications engine, and can be executed during application development, system manufacture, or end-equipment operation.

The key to the high-accuracy gas gauging prediction is Texas Instruments proprietary Impedance Track™ algorithm. This algorithm uses cell measurements, characteristics, and properties to create state-of-charge predictions that can achieve high-accuracy across a wide variety of operating conditions and over the lifetime of the battery.

The fuel gauge measures the charging and discharging of the battery by monitoring the voltage across a small-value sense resistor. When a cell is attached to the fuel gauge, cell impedance is computed, based on cell current, cell open-circuit voltage (OCV), and cell voltage under loading conditions.

The fuel gauge uses an integrated temperature sensor for estimating cell temperature. Alternatively, the host processor can provide temperature data for the fuel gauge.

More details are found in the *bq27421-G1 Technical Reference Manual (SLUUAC5)*.

Copyright © 2013–2014, Texas Instruments Incorporated

9.4 Device Functional Modes

To minimize power consumption, the fuel gauge has several power modes: INITIALIZATION, NORMAL, SLEEP, HIBERNATE, and SHUTDOWN. The fuel gauge passes automatically between these modes, depending upon the occurrence of specific events, though a system processor can initiate some of these modes directly. More details are found in the *bq27421-G1 Technical Reference Manual (SLUUAC5)*.

9.5 Programming

9.5.1 Standard Data Commands

The fuel gauge uses a series of 2-byte standard commands to enable system reading and writing of battery information. Each standard command has an associated command-code pair, as indicated in Table 1. Because each command consists of two bytes of data, two consecutive I^2C transmissions must be executed both to initiate the command function, and to read or write the corresponding two bytes of data. Additional details are found in the *bq27421-G1 Technical Reference Manual (SLUUAC5)*.

Table 1. Standard Commands

NAME		COMMAND CODE	UNIT	SEALED ACCESS
Control( )	CNTL	0x00 and 0x01	NA	RW
Temperature( )	TEMP	0x02 and 0x03	0.1°K	RW
Voltage( )	VOLT	0x04 and 0x05	mV	R
Flags( )	FLAGS	0x06 and 0x07	NA	R
NominalAvailableCapacity( )		0x08 and 0x09	mAh	R
FullAvailableCapacity( )		0x0A and 0x0B	mAh	R
RemainingCapacity( )	RM	0x0C and 0x0D	mAh	R
FullChargeCapacity( )	FCC	0x0E and 0x0F	mAh	R
AverageCurrent( )		0x10 and 0x11	mA	R
StandbyCurrent( )		0x12 and 0x13	mA	R
MaxLoadCurrent( )		0x14 and 0x15	mA	R
AveragePower( )		0x18 and 0x19	mW	R
StateOfCharge( )	SOC	0x1C and 0x1D	%	R
InternalTemperature( )		0x1E and 0x1F	0.1°K	R
StateOfHealth( )	SOH	0x20 and 0x21	num / %	R
RemainingCapacityUnfiltered( )		0x28 and 0x29	mAh	R
RemainingCapacityFiltered( )		0x2A and 0x2B	mAh	R
FullChargeCapacityUnfiltered( )		0x2C and 0x2D	mAh	R
FullChargeCapacityFlitered( )		0x2E and 0x2F	mAh	R
StateOfChargeUnfiltered( )		0x30 and 0x31	%	R

Copyright © 2013–2014, Texas Instruments Incorporated

9.5.2 *Control( )*: 0x00 and 0x01

Issuing a *Control( )* command requires a subsequent 2-byte subcommand. These additional bytes specify the particular control function desired. The *Control( )* command allows the system to control specific features of the fuel gauge during normal operation and additional features when the device is in different access modes, as described in Table 2. Additional details are found in the *bq27421-G1 Technical Reference Manual (SLUUAC5)*.

Table 2. *Control( )* Subcommands

CNTL FUNCTION	CNTL DATA	SEALED ACCESS	DESCRIPTION
CONTROL_STATUS	0x0000	Yes	Reports the status of device.
DEVICE_TYPE	0x0001	Yes	Reports the device type (0x0421).
FW_VERSION	0x0002	Yes	Reports the firmware version of the device.
DM_CODE	0x0004	Yes	Reports the Data Memory Code number stored in NVM.
PREV_MACWRITE	0x0007	Yes	Returns previous MAC command code.
CHEM_ID	0x0008	Yes	Reports the chemical identifier of the battery profile used by the fuel gauge.
BAT_INSERT	0x000C	Yes	Forces the *Flags() [BAT_DET]* bit set when the ***OpConfig [BIE]*** bit is 0.
BAT_REMOVE	0x000D	Yes	Forces the *Flags() [BAT_DET]* bit clear when the ***OpConfig [BIE]*** bit is 0.
SET_HIBERNATE	0x0011	Yes	Forces *CONTROL_STATUS [HIBERNATE]* to 1.
CLEAR_HIBERNATE	0x0012	Yes	Forces *CONTROL_STATUS [HIBERNATE]* to 0.
SET_CFGUPDATE	0x0013	No	Force *CONTROL_STATUS [CFGUPMODE]* to 1 and gauge enters CONFIG UPDATE mode.
SHUTDOWN_ENABLE	0x001B	No	Enables device SHUTDOWN mode.
SHUTDOWN	0x001C	No	Commands the device to enter SHUTDOWN mode.
SEALED	0x0020	No	Places the device in SEALED access mode.
TOGGLE_GPOUT	0x0023	Yes	Commands the device to toggle the GPOUT pin for 1 ms.
RESET	0x0041	No	Performs a full device reset.
SOFT_RESET	0x0042	No	Gauge exits CONFIG UPDATE mode.
EXIT_CFGUPDATE	0x0043	No	Exits CONFIG UPDATE mode without an OCV measurement and without resimulating to update *StateOfCharge( ).*
EXIT_RESIM	0x0044	No	Exits CONFIG UPDATE mode without an OCV measurement and resimulates with the updated configuration data to update *StateOfCharge( ).*

9.5.3 Extended Data Commands

Extended data commands offer additional functionality beyond the standard set of commands. They are used in the same manner; however, unlike standard commands, extended commands are not limited to 2-byte words. The number of command bytes for a given extended command ranges in size from single to multiple bytes, as specified in Table 3.

Table 3. Extended Commands

Name	Command Code	Unit	SEALED Access (1) (2)	UNSEALED Access (1) (2)
OpConfig( )	0x3A and 0x3B	NA	R	R
DesignCapacity( )	0x3C and 0x3D	mAh	R	R
DataClass( ) (2)	0x3E	NA	NA	RW
DataBlock( ) (2)	0x3F	NA	RW	RW
BlockData( )	0x40 through 0x5F	NA	R	RW
BlockDataCheckSum( )	0x60	NA	RW	RW
BlockDataControl( )	0x61	NA	NA	RW
Reserved	0x62 through 0x7F	NA	R	R

(1) SEALED and UNSEALED states are entered via commands to *Control( )* 0x00 and 0x01
(2) In SEALED mode, data cannot be accessed through commands 0x3E and 0x3F.

Copyright © 2013–2014, Texas Instruments Incorporated

9.5.4 Communications

9.5.4.1 I²C Interface

The fuel gauge supports the standard I²C read, incremental read, quick read, one-byte write, and incremental write functions. The 7-bit device address (ADDR) is the most significant 7 bits of the hex address and is fixed as 1010101. The first 8 bits of the I²C protocol are, therefore, 0xAA or 0xAB for write or read, respectively.

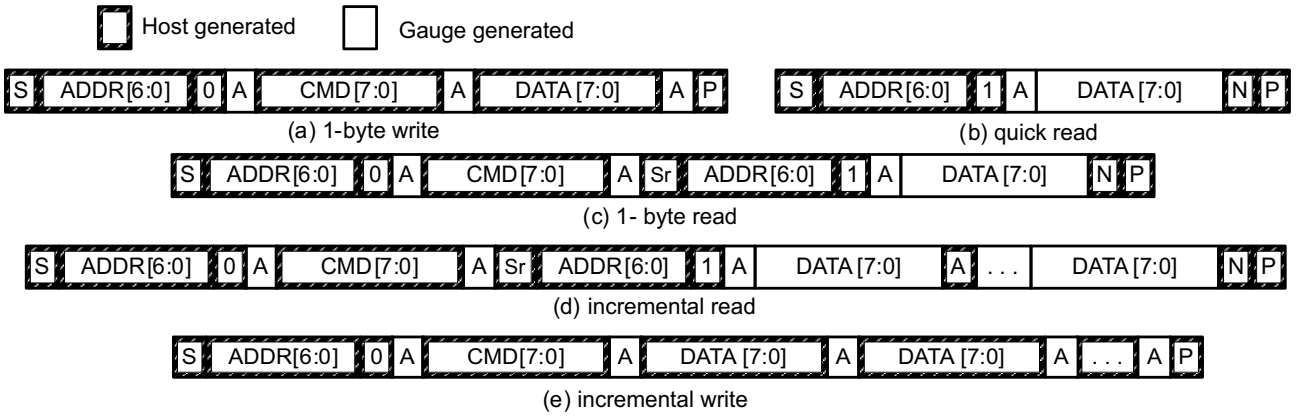

(S = Start, Sr = Repeated Start, A = Acknowledge, N = No Acknowledge, and P = Stop).

The quick read returns data at the address indicated by the address pointer. The address pointer, a register internal to the I²C communication engine, increments whenever data is acknowledged by the fuel gauge or the I²C master. "Quick writes" function in the same manner and are a convenient means of sending multiple bytes to consecutive command locations (such as two-byte commands that require two bytes of data).

The following command sequences are not supported:

Attempt to write a read-only address (NACK after data sent by master):

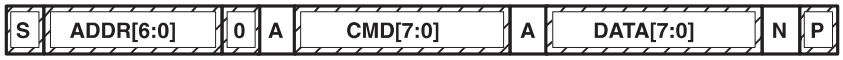

Attempt to read an address above 0x6B (NACK command):



9.5.4.2 I²C Time Out

The I²C engine releases both SDA and SCL if the I²C bus is held low for 2 seconds. If the fuel gauge is holding the lines, releasing them frees them for the master to drive the lines. If an external condition is holding either of the lines low, the I²C engine enters the low-power sleep mode.

Copyright © 2013–2014, Texas Instruments Incorporated

9.5.4.3 I^2C Command Waiting Time

To ensure proper operation at 400 kHz, a $t_{(BUF)}$ ≥ 66 µs bus-free waiting time must be inserted between all packets addressed to the fuel gauge. In addition, if the SCL clock frequency (f_{SCL}) is > 100 kHz, use individual 1-byte write commands for proper data flow control. The following diagram shows the standard waiting time required between issuing the control subcommand the reading the status result. For read-write standard command, a minimum of 2 seconds is required to get the result updated. For read-only standard commands, there is no waiting time required, but the host must not issue any standard command more than two times per second. Otherwise, the gauge could result in a reset issue due to the expiration of the watchdog timer.

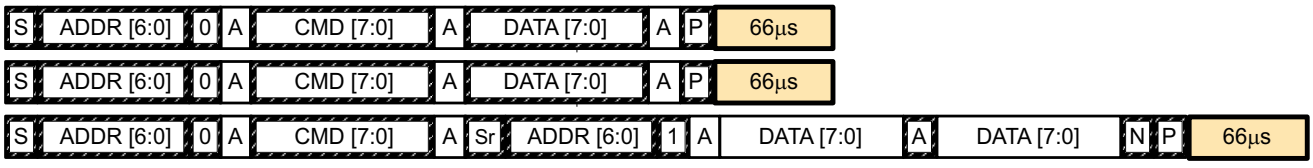

Waiting time inserted between two 1-byte write packets for a subcommand and reading results
(required for 100 kHz < f_{SCL} ≤ 400 kHz)

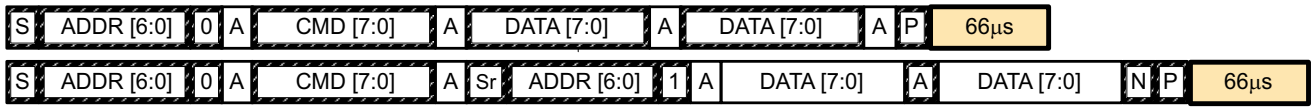

Waiting time inserted between incremental 2-byte write packet for a subcommand and reading results
(acceptable for f_{SCL} ≤ 100 kHz)

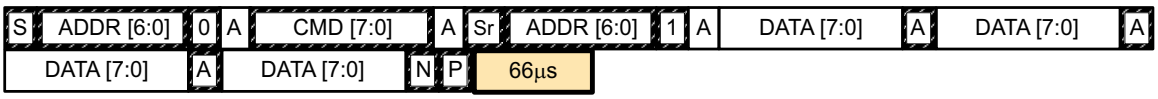

Waiting time inserted after incremental read

9.5.4.4 I^2C Clock Stretching

A clock stretch can occur during all modes of fuel gauge operation. In SLEEP and HIBERNATE modes, a short ≤ 100-µs clock stretch occurs on all I^2C traffic as the device must wake-up to process the packet. In the other modes (INITIALIZATION, NORMAL) a ≤ 4-ms clock stretching period may occur within packets addressed for the fuel gauge as the I^2C interface performs normal data flow control.

Copyright © 2013–2014, Texas Instruments Incorporated

10 Application and Implementation

10.1 Typical Application

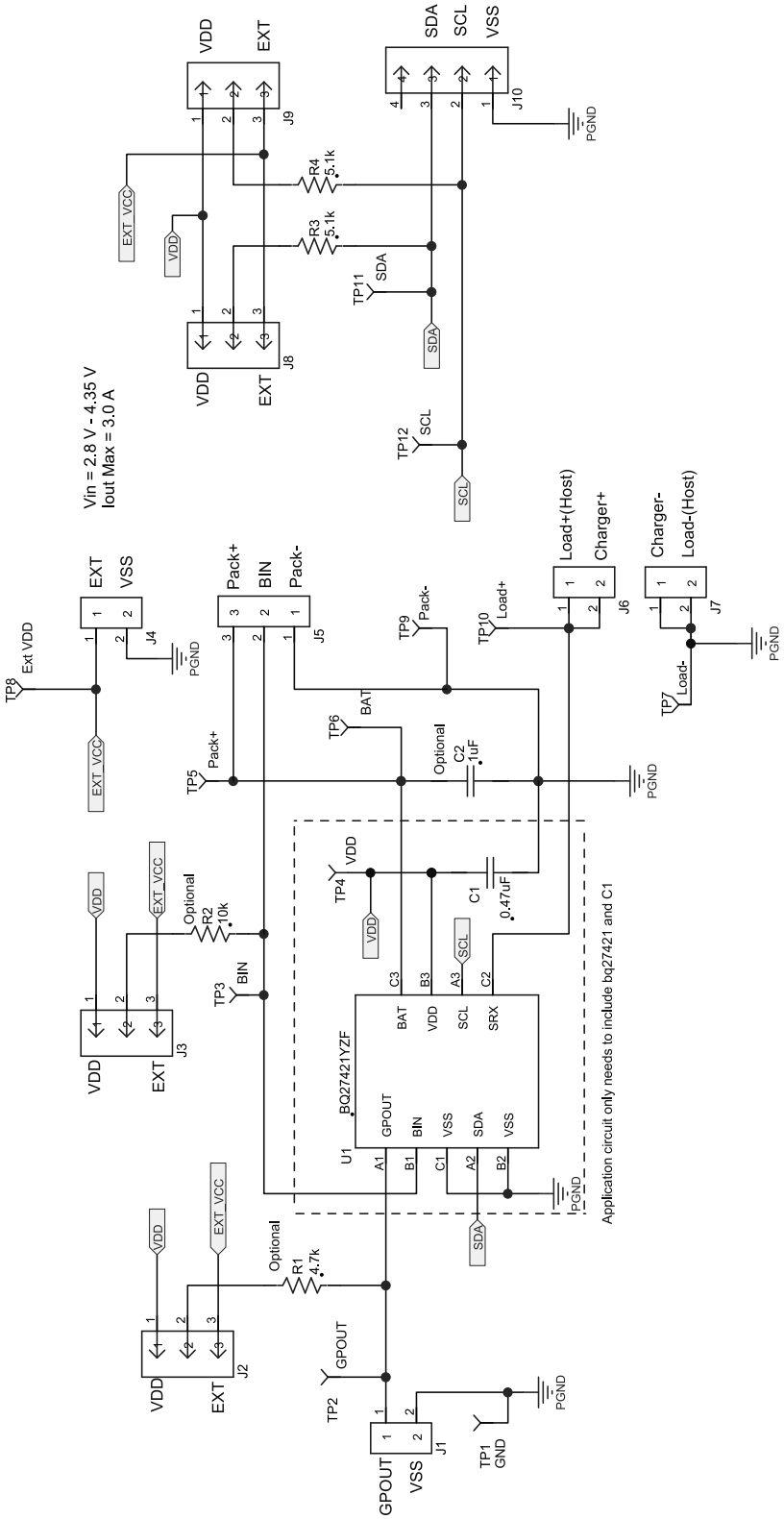

11 Power Supply Recommendation

11.1 Power Supply Decoupling

The battery connection on the BAT pin is used for two purposes:

- To supply power to the fuel gauge
- As an input for voltage measurement of the battery

If the connection between the battery pack and the BAT pin has the potential to pick up noise, then a 1.0-µF capacitor is recommended between the BAT pin and V_{SS}. The capacitor should be placed close to the gauge IC and have short traces to both the V_{DD} pin and V_{SS}.

The fuel gauge has an integrated LDO with an output on the V_{DD} pin of approximately 1.8 V. A capacitor of value at least 0.47 µF should be connected between the V_{DD} pin and V_{SS}. The capacitor should be placed close to the gauge IC and have short traces to both the V_{DD} pin and V_{SS}.

Copyright © 2013–2014, Texas Instruments Incorporated

12 Layout

12.1 Layout Guidelines

- A capacitor, of value at least 0.47 µF, is connected between the V_{DD} pin and V_{SS}. The capacitor should be placed close to the gauge IC and have short traces to both the V_{DD} pin and V_{SS}.
- It is recommend to have a capacitor, at least 1.0 µF, connect between the BAT pin and V_{SS} if the connection between the battery pack and the gauge BAT pin has the potential to pick up noise. The capacitor should be placed close to the gauge IC and have short traces to both the V_{DD} pin and V_{SS}.
- If the external pullup resistors on the SCL and SDA lines will be disconnected from the host during low-power operation, it is recommend to use external 1-MΩ pulldown resistors to V_{SS} to avoid floating inputs to the I^2C engine.
- The value of the SCL and SDA pullup resistors should take into consideration the pullup voltage and the bus capacitance. Some recommended values, assuming a bus capacitance of 10 pF, can be seen in Table 4.

Table 4. Recommended Values for SCL and SDA Pullup Resistors

VPU	1.8 V		3.3 V	
R_{PU}	Range	Typical	Range	Typical
	400 Ω ≤ R_{PU} ≤ 37.6 kΩ	10 kΩ	900 Ω ≤ R_{PU} ≤ 29.2 kΩ	5.1 kΩ

- If the GPOUT pin is not used by the host, the pin should still be pulled up to V_{DD} with a 4.7-kΩ or 10-kΩ resistor.
- If the battery pack thermistor is not connected to the BIN pin, the BIN pin should be pulled down to V_{SS} with a 10-kΩ resistor.
- The BIN pin should not be shorted directly to V_{DD} or V_{SS}.
- The actual device ground is the center pin (B2). The C1 pin is floating internally and can be used as a bridge to connect the board ground plane to the device ground (B2).

12.2 Layout Example

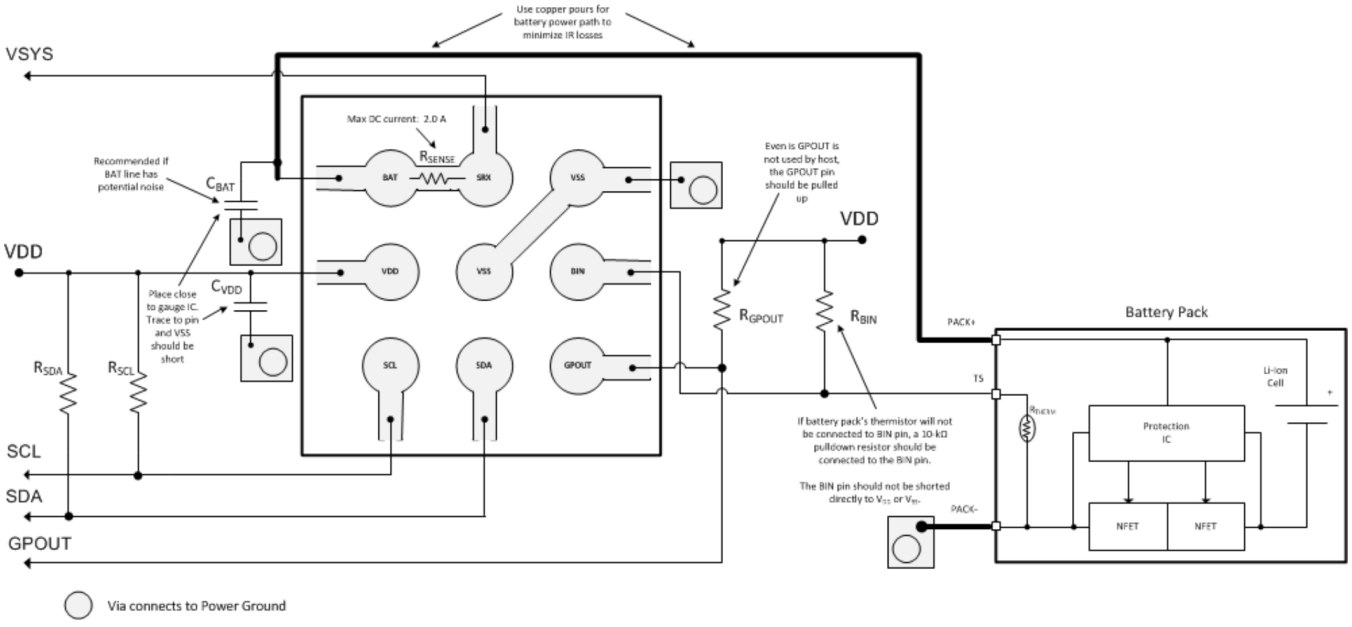

Figure 2. bq27421-G1 Board Layout

13 器件和文档支持

13.1 文档支持

13.1.1 德州仪器 (TI) 相关文档

如需以下任何 TI 文档的副本，请致电 (800) 477-8924 联系德州仪器 (TI) 文献咨询中心或致电 (972) 644-5580 联系产品信息中心 (PIC)。 订购时，可通过文档标题或文献编号识别文档。 也可通过 TI 网站获取更新版本的文档，网址：www.ti.com。

1. 《*bq27421-G1 技术参考*用户指南》(SLUUAC5)
2. 《*bq27421 EVM：单节电池技术*用户指南》(SLUUA63)
3. 《*bq27421-G1 快速入门指南*》(SLUUAH7)
4. 《*单节电池电量监测计电路设计*》(SLUA456)
5. 《*bq27500 和 bq27501 主要设计注意事项*》(SLUA439)
6. 《*单节电池 Impedance Track 印刷电路板布局布线指南*》(SLUA457)
7. 《*手持式电池电子产品中的 ESD 和 RF 迁移*》(SLUA460)

13.2 商标

Impedance Track, NanoFree are trademarks of Texas Instruments.
All other trademarks are the property of their respective owners.

13.3 静电放电警告



ESD 可能会损坏该集成电路。德州仪器 (TI) 建议通过适当的预防措施处理所有集成电路。如果不遵守正确的处理措施和安装程序，可能会损坏集成电路。

ESD 的损坏小至导致微小的性能降级，大至整个器件故障。 精密的集成电路可能更容易受到损坏，这是因为非常细微的参数更改都可能会导致器件与其发布的规格不相符。

13.4 术语表

SLYZ022 — *TI 术语表*。

这份术语表列出并解释术语、首字母缩略词和定义。

14 机械封装和可订购信息

以下页中包括机械封装和可订购信息。 这些信息是针对指定器件可提供的最新数据。 这些数据会在无通知且不对本文档进行修订的情况下发生改变。 欲获得该数据表的浏览器版本，请查阅左侧的导航栏。

版权 © 2013–2014, Texas Instruments Incorporated

PACKAGING INFORMATION

Orderable Device	Status (1)	Package Type	Package Drawing	Pins	Package Qty	Eco Plan (2)	Lead finish/ Ball material (6)	MSL Peak Temp (3)	Op Temp (°C)	Device Marking (4/5)	Samples
BQ27421YZFR-G1A	ACTIVE	DSBGA	YZF	9	3000	RoHS & Green	SNAGCU	Level-1-260C-UNLIM	-40 to 85	BQ27421 G1A	Samples
BQ27421YZFR-G1B	ACTIVE	DSBGA	YZF	9	3000	RoHS & Green	SNAGCU	Level-1-260C-UNLIM	-40 to 85	BQ27421 G1B	Samples
BQ27421YZFR-G1D	ACTIVE	DSBGA	YZF	9	3000	RoHS & Green	SNAGCU	Level-1-260C-UNLIM	-40 to 85	BQ27421 G1D	Samples
BQ27421YZFT-G1A	ACTIVE	DSBGA	YZF	9	250	RoHS & Green	SNAGCU	Level-1-260C-UNLIM	-40 to 85	BQ27421 G1A	Samples
BQ27421YZFT-G1B	ACTIVE	DSBGA	YZF	9	250	RoHS & Green	SNAGCU	Level-1-260C-UNLIM	-40 to 85	BQ27421 G1B	Samples
BQ27421YZFT-G1D	ACTIVE	DSBGA	YZF	9	250	RoHS & Green	SNAGCU	Level-1-260C-UNLIM	-40 to 85	BQ27421 G1D	Samples

(1) The marketing status values are defined as follows:
ACTIVE: Product device recommended for new designs.
LIFEBUY: TI has announced that the device will be discontinued, and a lifetime-buy period is in effect.
NRND: Not recommended for new designs. Device is in production to support existing customers, but TI does not recommend using this part in a new design.
PREVIEW: Device has been announced but is not in production. Samples may or may not be available.
OBSOLETE: TI has discontinued the production of the device.

(2) **RoHS:** TI defines "RoHS" to mean semiconductor products that are compliant with the current EU RoHS requirements for all 10 RoHS substances, including the requirement that RoHS substance do not exceed 0.1% by weight in homogeneous materials. Where designed to be soldered at high temperatures, "RoHS" products are suitable for use in specified lead-free processes. TI may reference these types of products as "Pb-Free".
RoHS Exempt: TI defines "RoHS Exempt" to mean products that contain lead but are compliant with EU RoHS pursuant to a specific EU RoHS exemption.
Green: TI defines "Green" to mean the content of Chlorine (Cl) and Bromine (Br) based flame retardants meet JS709B low halogen requirements of <=1000ppm threshold. Antimony trioxide based flame retardants must also meet the <=1000ppm threshold requirement.

(3) MSL, Peak Temp. - The Moisture Sensitivity Level rating according to the JEDEC industry standard classifications, and peak solder temperature.

(4) There may be additional marking, which relates to the logo, the lot trace code information, or the environmental category on the device.

(5) Multiple Device Markings will be inside parentheses. Only one Device Marking contained in parentheses and separated by a "~" will appear on a device. If a line is indented then it is a continuation of the previous line and the two combined represent the entire Device Marking for that device.

(6) Lead finish/Ball material - Orderable Devices may have multiple material finish options. Finish options are separated by a vertical ruled line. Lead finish/Ball material values may wrap to two lines if the finish value exceeds the maximum column width.

Important Information and Disclaimer: The information provided on this page represents TI's knowledge and belief as of the date that it is provided. TI bases its knowledge and belief on information provided by third parties, and makes no representation or warranty as to the accuracy of such information. Efforts are underway to better integrate information from third parties. TI has taken and continues to take reasonable steps to provide representative and accurate information but may not have conducted destructive testing or chemical analysis on incoming materials and chemicals. TI and TI suppliers consider certain information to be proprietary, and thus CAS numbers and other limited information may not be available for release.

In no event shall TI's liability arising out of such information exceed the total purchase price of the TI part(s) at issue in this document sold by TI to Customer on an annual basis.

TAPE AND REEL INFORMATION

REEL DIMENSIONS

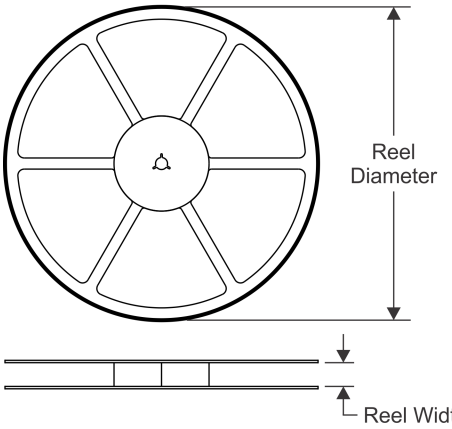

TAPE DIMENSIONS

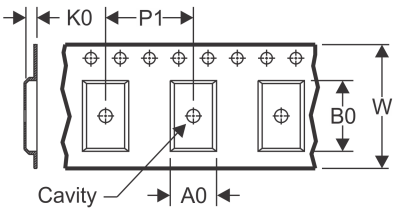

A0	Dimension designed to accommodate the component width
B0	Dimension designed to accommodate the component length
K0	Dimension designed to accommodate the component thickness
W	Overall width of the carrier tape
P1	Pitch between successive cavity centers

QUADRANT ASSIGNMENTS FOR PIN 1 ORIENTATION IN TAPE

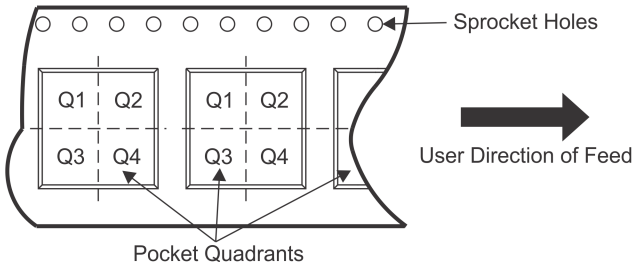

*All dimensions are nominal

Device	Package Type	Package Drawing	Pins	SPQ	Reel Diameter (mm)	Reel Width W1 (mm)	A0 (mm)	B0 (mm)	K0 (mm)	P1 (mm)	W (mm)	Pin1 Quadrant
BQ27421YZFR-G1A	DSBGA	YZF	9	3000	180.0	8.4	1.78	1.78	0.69	4.0	8.0	Q1
BQ27421YZFR-G1B	DSBGA	YZF	9	3000	180.0	8.4	1.78	1.78	0.69	4.0	8.0	Q1
BQ27421YZFR-G1D	DSBGA	YZF	9	3000	180.0	8.4	1.78	1.78	0.69	4.0	8.0	Q1
BQ27421YZFT-G1A	DSBGA	YZF	9	250	180.0	8.4	1.78	1.78	0.69	4.0	8.0	Q1
BQ27421YZFT-G1B	DSBGA	YZF	9	250	180.0	8.4	1.78	1.78	0.69	4.0	8.0	Q1
BQ27421YZFT-G1D	DSBGA	YZF	9	250	180.0	8.4	1.78	1.78	0.69	4.0	8.0	Q1

TAPE AND REEL BOX DIMENSIONS

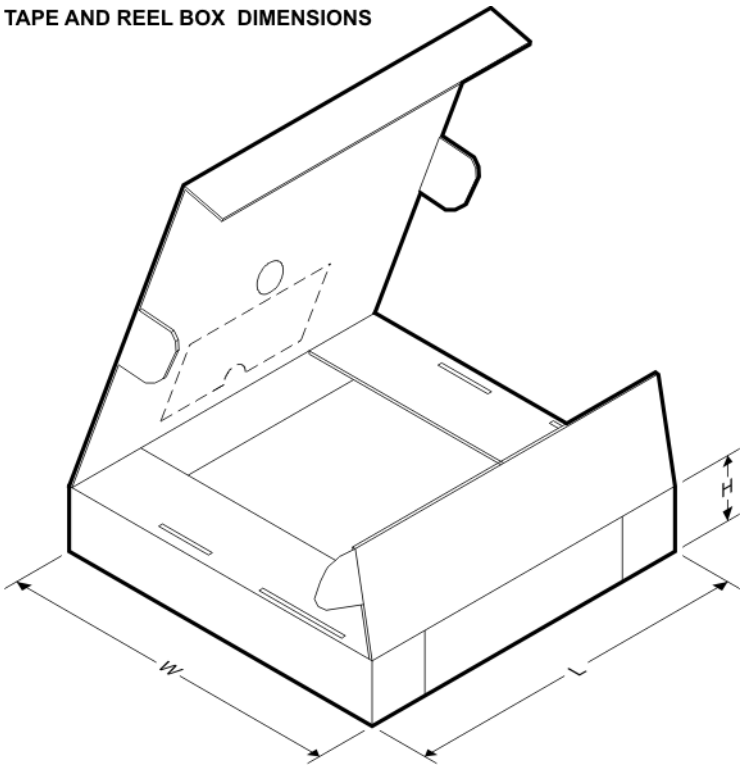

*All dimensions are nominal

Device	Package Type	Package Drawing	Pins	SPQ	Length (mm)	Width (mm)	Height (mm)
BQ27421YZFR-G1A	DSBGA	YZF	9	3000	182.0	182.0	20.0
BQ27421YZFR-G1B	DSBGA	YZF	9	3000	182.0	182.0	20.0
BQ27421YZFR-G1D	DSBGA	YZF	9	3000	182.0	182.0	20.0
BQ27421YZFT-G1A	DSBGA	YZF	9	250	182.0	182.0	20.0
BQ27421YZFT-G1B	DSBGA	YZF	9	250	182.0	182.0	20.0
BQ27421YZFT-G1D	DSBGA	YZF	9	250	182.0	182.0	20.0

PACKAGE OUTLINE

YZF0009

DSBGA - 0.625 mm max height

DIE SIZE BALL GRID ARRAY

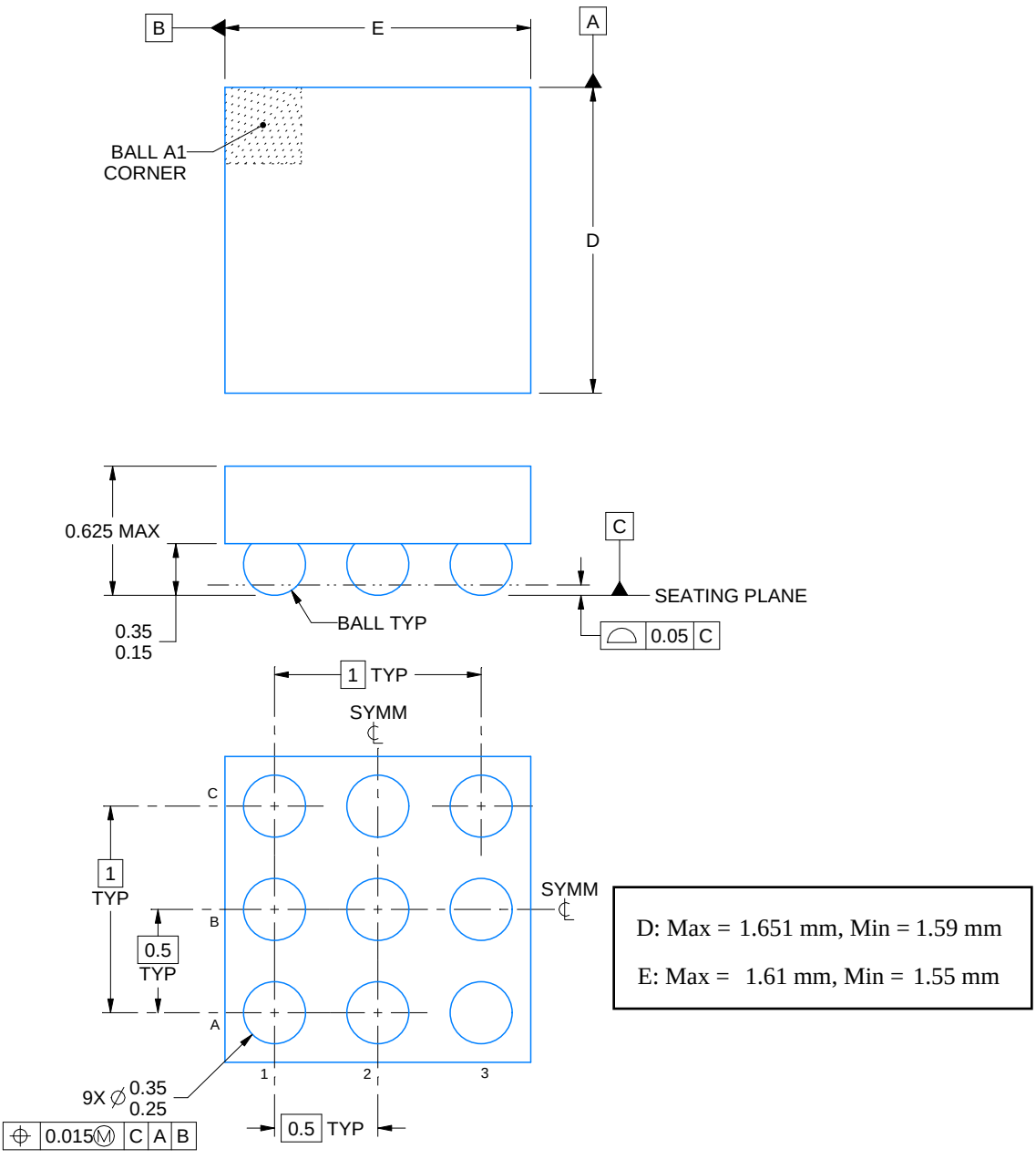

4219558/A 10/2018

NOTES:

1. All linear dimensions are in millimeters. Any dimensions in parenthesis are for reference only. Dimensioning and tolerancing per ASME Y14.5M.
2. This drawing is subject to change without notice.

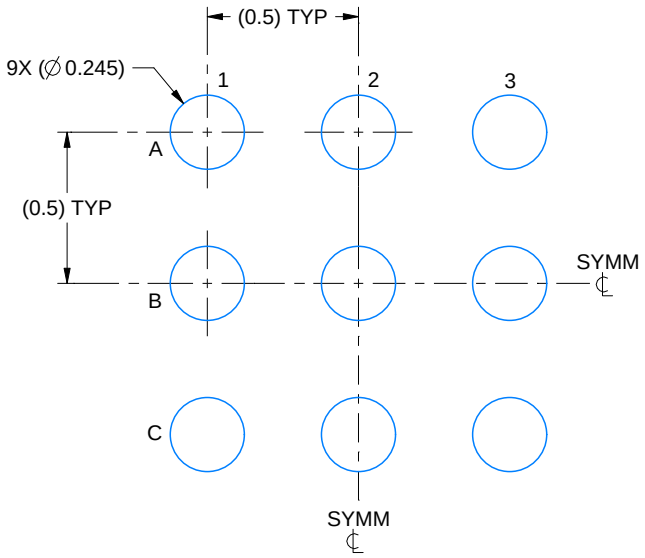

LAND PATTERN EXAMPLE
EXPOSED METAL SHOWN
SCALE: 40X

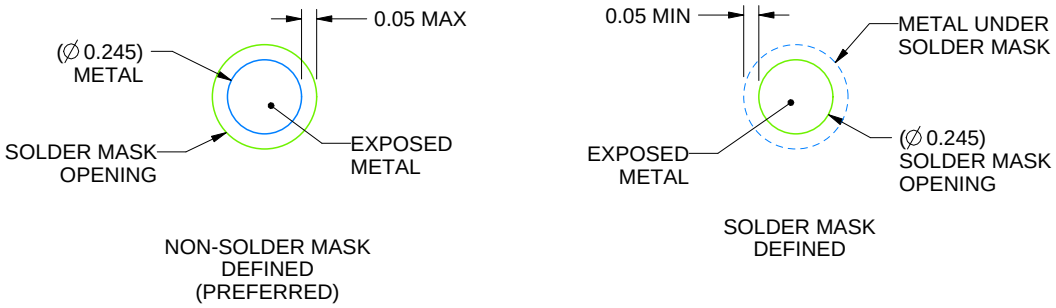

SOLDER MASK DETAILS
NOT TO SCALE

4219558/A 10/2018

NOTES: (continued)

3. Final dimensions may vary due to manufacturing tolerance considerations and also routing constraints.
   See Texas Instruments Literature No. SNVA009 (www.ti.com/lit/snva009).

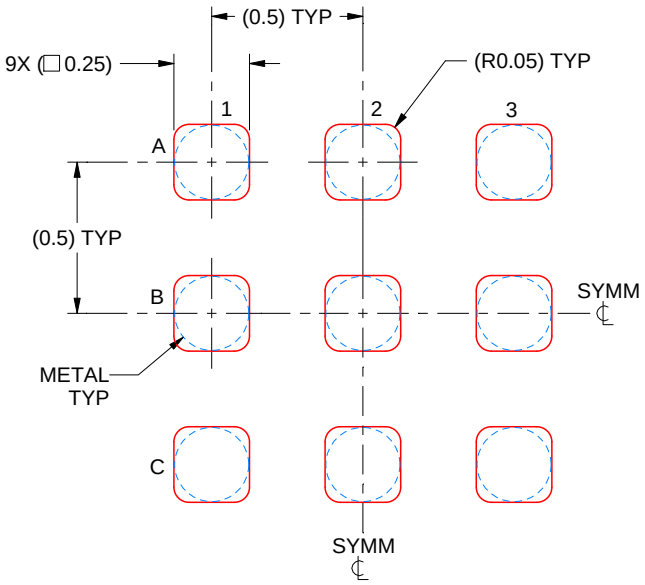

SOLDER PASTE EXAMPLE
BASED ON 0.1 mm THICK STENCIL
SCALE: 40X

4219558/A 10/2018

NOTES: (continued)

4. Laser cutting apertures with trapezoidal walls and rounded corners may offer better paste release.

重要声明和免责声明

TI 提供技术和可靠性数据（包括数据表）、设计资源（包括参考设计）、应用或其他设计建议、网络工具、安全信息和其他资源，不保证没有瑕疵且不做出任何明示或暗示的担保，包括但不限于对适销性、某特定用途方面的适用性或不侵犯任何第三方知识产权的暗示担保。

这些资源可供使用 TI 产品进行设计的熟练开发人员使用。您将自行承担以下全部责任：(1) 针对您的应用选择合适的 TI 产品，(2) 设计、验证并测试您的应用，(3) 确保您的应用满足相应标准以及任何其他安全、安保或其他要求。这些资源如有变更，恕不另行通知。TI 授权您仅可将这些资源用于研发本资源所述的 TI 产品的应用。严禁对这些资源进行其他复制或展示。您无权使用任何其他 TI 知识产权或任何第三方知识产权。您应全额赔偿因在这些资源的使用中对 TI 及其代表造成的任何索赔、损害、成本、损失和债务，TI 对此概不负责。

TI 提供的产品受 TI 的销售条款 (https:www.ti.com.cn/zh-cn/legal/termsofsale.html) 或 ti.com.cn 上其他适用条款/TI 产品随附的其他适用条款的约束。TI 提供这些资源并不会扩展或以其他方式更改 TI 针对 TI 产品发布的适用的担保或担保免责声明。

邮寄地址：上海市浦东新区世纪大道 1568 号中建大厦 32 楼，邮政编码：200122
Copyright © 2021 德州仪器半导体技术（上海）有限公司