TAS2553 2.8W D 类单声道音频放大器，支持 G 类升压和扬声器感测

1 特性

- 模拟或数字输入单声道升压 D 类放大器
- 为 8Ω 负载提供 2.8 W 功率，供电方式为 3.6 V 电源（1% 总谐波失真 (THD) + N）
- 额定功率下，效率达到 86%
- I2S，左侧对齐，右侧对齐，数字信号处理器 (DSP)，脉冲密度调制 (PDM)，以及时分复用 (TDM) 输入和输出接口
- 输入采样速率从 8kHz 至 192kHz
- 高效 G 类升压转换器
  - 自动调节 D 类电源
- 内置扬声器感测
  - 测量扬声器电流和电压
  - 测量 VBAT 和 VBOOST 电压
- 内置自动增益控制 (AGC)
  - 限制电池流耗
- 可调 D 类开关边缘速率控制
- 电源
  - 升压输入：3.0V 至 5.5V
  - 模拟：1.65V 至 1.95V
  - 数字 I/O：1.5V 至 3.6V
- 过热和短路保护
- 用于寄存器控制的 I^2C 接口
- 使用两个 TAS2553 的立体声配置
  - I^2C 地址选择端子 (ADDR)
- 2.855mm x 2.575mm，0.4mm 焊球间距，30 焊球晶圆级芯片封装 (WCSP)

2 应用范围

- 移动电话
- 便携式导航设备 (PND)
- 便携式音频底座
- 平板电脑
- 游戏设备

3 说明

TAS2553 是一款高效 D 类音频功率放大器，此放大器具有高级电池电流管理功能和集成 G 类升压转换器。此器件持续测量负载上的电流和电压，并且提供此类信息的数字流。

G 类升压转换器生成 D 类放大器电源轨。 低 D 类输出功率期间，此升压转换器通过使 VBAT 无效并将其直接接至 D 类放大器电源来提升效率。 当需要高功率音频时，升压转换器快速激活，以提供比直接接至电池的单独放大器高很多的音频。

AGC 自动调节 D 类增益，以减少充电结束电压上的电池电流，从而防止输出削波、失真和早期系统关断。通过 I^2C 调节固定增益。 增益范围介于 -7dB 至 +24dB 之间（步长 1dB）。

除了差分单声道模拟输入，TAS2553 具有使用数字输入的内置 16 位数模 (D/A) 转换器。 将 D/A 转换器从数字主机处理器移至集成放大器的工艺能够以更低的系统成本提供更佳的动态性能。 此外，由于印刷电路板 (PCB) 传输的是数字信号而非模拟信号，所以系统级上对于外部干扰（例如 GSM 帧速率噪声）的敏感度被减少。

器件信息

订货编号	封装	封装尺寸
TAS2553YFF	WCSP (30)	2.855mm x 2.575mm

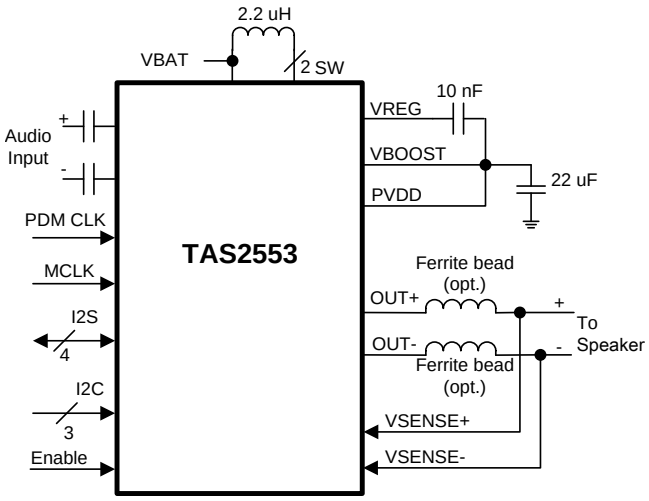

PRODUCTION DATA information is current as of publication date. Products conform to specifications per the terms of the Texas Instruments standard warranty. Production processing does not necessarily include testing of all parameters.

目录

1 特性 ... 1
2 应用范围 ... 1
3 说明 ... 1
4 修订历史记录 ... 2
5 **Terminal Configuration and Functions** ... 3
6 **Specifications** ... 4
6.1 Absolute Maximum Ratings ... 4
6.2 Handling Ratings ... 4
6.3 Recommended Operating Conditions ... 4
6.4 Thermal Information ... 4
6.5 Electrical Characteristics ... 5
6.6 Timing Requirements/Timing Diagrams ... 8
6.7 Typical Characteristics ... 9
7 **Detailed Description** ... 13
7.1 Overview ... 13
7.2 Functional Block Diagram ... 13
7.3 Feature Description ... 14
7.4 Device Functional Modes ... 20
7.5 Register Map ... 31
8 **Applications and Implementation** ... 42
8.1 Application Information ... 42
8.2 Typical Applications ... 42
8.3 Initialization ... 46
9 **Power Supply Recommendations** ... 47
9.1 Power Supplies ... 47
9.2 Power Supply Sequencing ... 47
9.3 Boost Supply Details ... 47
10 **Layout** ... 48
10.1 Layout Guidelines ... 48
10.2 Layout Example ... 49
10.3 Package Dimensions ... 50
11 器件和文档支持 ... 51
11.1 Trademarks ... 51
11.2 Electrostatic Discharge Caution ... 51
11.3 Glossary ... 51
12 机械封装和可订购信息 ... 52

4 修订历史记录

Changes from Revision A (October 2013) to Revision B	**Page**
• 已更改 数据表格式	1

Changes from Original (September 2013) to Revision A	**Page**
• Changed Register 0x16[3:0] from 0111 to 1000	40

Copyright © 2013–2014, Texas Instruments Incorporated

5 Terminal Configuration and Functions

30-Ball WCSP
YFF Package
(Top View)

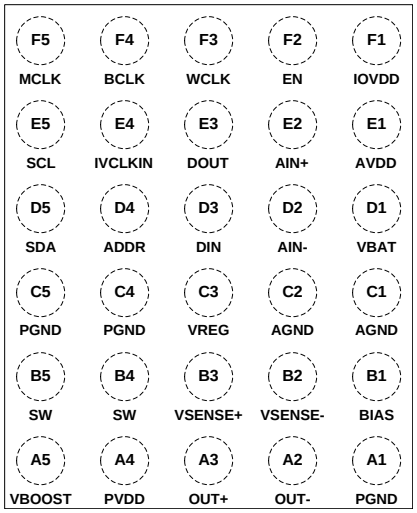

Terminal Functions

TERMINAL		INPUT/OUTPUT/ POWER	DESCRIPTION
NAME	BALL WCSP		
PGND	A1	P	Power ground. Connect to high current ground plane.
OUT–	A2	O	Inverting Class D output.
OUT+	A3	O	Non-inverting Class D output.
PVDD	A4	P	Class-D power supply. Connected internally to VBOOST – do not drive this terminal externally.
VBOOST	A5	P	7.5 V boost output. Connected internally to PVDD – do not drive this terminal externally.
BIAS	B1	O	Mid-rail reference for Class D channel.
VSENSE–	B2	I	Inverting voltage sense input.
VSENSE+	B3	I	Non-inverting voltage sense input.
SW	B4,B5	I/O	Boost switch terminal.
AGND	C1,C2	P	Analog ground. Connect to low noise ground plane.
VREG	C3	O	High-side FET gate drive boost converter.
PGND	C4,C5	P	Power ground. Connect to high current ground plane.
VBAT	D1	P	Battery power supply. Connect to 3.0 V to 5.5 V battery supply.
AIN–	D2	I	Inverting analog input.
DIN	D3	I	Audio serial data input. Format is I2S, LJF, RJF, or TDM data.
ADDR	D4	I	I^2C address select terminal. Set ADDR = GND for device 7-bit address 0x40; set ADDR = IOVDD for 7-bit address 0x41.
SDA	D5	I/O	I^2C control bus data.
AVDD	E1	P	Analog low voltage supply terminal. Connect to 1.65 V to 1.95 V supply.
AIN+	E2	I	Non-inverting analog input.
DOUT	E3	O	Serial I/V digital output. Format is I2S, LJF, RJF, TDM, or undecimated PDM data.
IVCLKIN	E4	I	Serial clock input for undecimated PDM I/V data.
SCL	E5	I	I^2C control bus clock.
EN	F2	I	Device enable (HIGH = Normal Operation, LOW = Standby)
WCLK	F3	I	Audio serial word clock.

Copyright © 2013–2014, Texas Instruments Incorporated

Terminal Functions (continued)

TERMINAL		INPUT/OUTPUT/ POWER	DESCRIPTION
NAME	BALL WCSP		
BCLK	F4	I	Audio serial bit clock.
MCLK	F5	I	External master clock.
IOVDD	F1	P	Supply for digital input and output levels. Voltage range is 1.5 V to 3.6 V.

6 Specifications

6.1 Absolute Maximum Ratings

over operating free-air temperature range, T_A = 25°C (unless otherwise noted)

		MIN	MAX	UNIT
VBAT	Battery voltage	–0.3	6.0	V
AVDD	Analog supply voltage	–0.3	2.5	V
IOVDD	I/O Supply voltage	–0.3	3.9	V
AIN+, AIN–	Analog input voltage	–0.3	AVDD + 0.3	V
	Digital input voltage	–0.3	IOVDD + 0.3	V
	Output continuous total power dissipation	See Thermal Information		NA

6.2 Handling Ratings

PARAMETER	DEFINITION	MIN	MAX	UNIT
T_{stg}	Storage temperature range	–65	150	°C
ESD	HBM		3000	V
	CDM		1500	

6.3 Recommended Operating Conditions

over operating free-air temperature range (unless otherwise noted)

		MIN	NOM	MAX	UNIT
VBAT	Battery voltage	3.0		5.5	V
AVDD	Analog supply voltage	1.65	1.8	1.95	V
IOVDD	I/O supply voltage	1.5	1.8	3.6	V
T_A	Operating free-air temperature	–40		85	°C
T_J	Operating junction temperature	–40		150	°C

6.4 Thermal Information

THERMAL METRIC[1]		TAS2553 YFF (30 TERMINALS)	UNIT
θ_{JA}	Junction-to-ambient thermal resistance	76.5	°C/W
θ_{JCtop}	Junction-to-case (top) thermal resistance	0.2	
θ_{JB}	Junction-to-board thermal resistance	44.0	
ψ_{JT}	Junction-to-top characterization parameter	1.6	
ψ_{JB}	Junction-to-board characterization parameter	43.4	

(1) For more information about traditional and new thermal metrics, see the *IC Package Thermal Metrics* application report, SPRA953.

Copyright © 2013–2014, Texas Instruments Incorporated

6.5 Electrical Characteristics

VBAT = 3.6 V, AVDD = IOVDD = 1.8 V, EN = IOVDD, SWS = 0, Gain = 15 dB, ERC = 14 ns, R_L = 8 Ω + 33 µH, 48 kHz sample rate for digital input (unless otherwise noted)

PARAMETER	TEST CONDITIONS	MIN	TYP	MAX	UNIT
BOOST CONVERTER					
Boost Output Voltage	Average voltage (w/o including ripple). Includes load regulation (0-0.6A) and line regulation (VBAT = 3.0 – 4.8V).		7.5		V
Boost Converter Switching Frequency			1.8		MHz
CLASS-D CHANNEL					
Max Analog Input	For THD+N < 1%		1		V_{RMS}
Full-Scale DAC Output	All digital interface modes		1		V_{RMS}
Load Resistance (Load Spec Reisistance)		6	8		Ω
Class-D Frequency			764		kHz
Class-D + Boost Efficiency	VBAT = 3.0 – 4.8 V, Pout = 1 W (sinewave)		67%		
Class-D Output Current Limit (Short Circuit Protection)	VBOOST = 7.5 V, OUT– shorted to VBAT or VBOOST		3.7		A
Class-D Output Offset Voltage in Analog Input Mode	VBAT = 3.6 V, AV = 15 dB, RL = 8 Ω, input shorted to ground through single capacitor	-7.4		4.6	mV
Class-D Output Offset Voltage in Digital Input Mode	VBAT = 3.6 V, AV = 15 dB, RL =8 Ω, 0's data	-9.8		5.6	mV
Programmable Channel Gain Range (PGA + class-D), minimum	Typical value, analog and digital input		-7		dB
Programmable Channel Gain Range (PGA + class-D), maximum	Typical value, analog and digital input		24		dB
Programmable Channel Gain Step (PGA + class-D)	Typical value, analog and digital input		1		dB
Mute Attenuation	Device in shutdown, digital input only		103		dB
VBAT Power Supply Rejection Ratio (PSRR)	Ripple of 200mVpp @ 217 Hz, Gain = 15 dB, analog and digital input		63		dB
	Ripple of 200mVpp @ 1 kHz, Gain = 15 dB, analog and digital input		60		
	Ripple of 200mVpp @ 4 kHz, Gain = 15 dB, analog and digital input		60		
AVDD Power Supply Rejection Ratio (PSRR)	Ripple of 200mVpp @ 217 Hz, Gain = 15 dB, analog and digital input		69		dB
	Ripple of 200mVpp @ 1 kHz, Gain = 15 dB, analog and digital input		67		
	Ripple of 200mVpp @ 4 kHz, Gain = 15 dB, analog and digital input		62		
Common Mode Rejection Ratio	Ripple of 200mVpp @ 217 Hz, Gain = 15 dB, analog input		59		dB
THD+N	1 kHz, Po = 0.1W, VBAT = 3.6 V, RL = 8 Ω		0.6%		
	1 kHz, Po = 0.5W, VBAT = 3.6 V, RL = 8 Ω		0.7%		
	1 kHz, Po = 1 W, VBAT = 3.6 V, RL = 8 Ω		0.9%		
	1 kHz, Po = 2 W, VBAT = 3.6 V, RL = 8 Ω		1.3%		
Output Integrated Noise (20Hz-20kHz) - 8Ω	A-wt Filter, Gain = 15 dB, DAC modulator switching		131%		µV
	A-wt Filter, Gain = 15 dB, Analog In, Inputs shorted		173%		

Copyright © 2013–2014, Texas Instruments Incorporated

Electrical Characteristics (continued)

VBAT = 3.6 V, AVDD = IOVDD = 1.8 V, EN = IOVDD, SWS = 0, Gain = 15 dB, ERC = 14 ns, R_L = 8 Ω + 33 µH, 48 kHz sample rate for digital input (unless otherwise noted)

PARAMETER		TEST CONDITIONS	MIN	TYP	MAX	UNIT
	Max Output Power, 8-Ω Load	THD+N = 1%, VBAT = 3.0 V		2.8		W
		THD+N = 1%, VBAT = 3.6 V		2.8		
	Output Impedance in Shutdown	EN = 0 V		10		kΩ
	Startup Time	Analog/digital input measured from time when device is taken out of software shutdown		8		mS
	Shutdown Time	Measured from time when device is programmed in software shutdown mode		1		µS
INPUT SECTION						
	Full-scale DAC output	All digital interface modes		1.0		V_{RMS}
	Maximum analog input voltage			1.0		V_{RMS}
R_{IN}	Input impedance (terminals AIN+, AIN-)	EN = IOVDD, Amplifier active		10		kΩ
		EN = 0 V, In shutdown		19		
CURRENT SENSE						
	Current Sense Full Scale	Peak current which will give full scale digital output		1.4		A_{PEAK}
	Current Sense Accuracy	I_{OUT} = 354 mA_{RMS} (1 W)		1%		
	Current Sense Offset	Input referred		0.0029		mA
	Current Sense Gain Error			0.09		dB
THD+N	Distortion + Noise	Po = 1.0W (Load = 8Ω + 33 µH)		0.17%		
VOLTAGE SENSE						
	Voltage Sense Full Scale	Peak voltage which will give full scale digital output		8.5		V_{PEAK}
	Voltage Sense Accuracy	V_{OUT} = 2.83 Vrms (1W)		2.2%		
	Voltage Sense Offset	Input referred		1.45		mV
	Voltage Sense Gain Error			-0.20		dB
THD+N	Distortion + Noise	Po = 1.0 W (Load = 8Ω + 33µH)		0.08%		
INTERFACE						
F_{MCLK}	MCLK frequency		0.512		49.15	MHz
F_{PDM}	PDM Clock (IVCLK) Frequency Range		1.636		3.25	MHz
PDM_{DC}	PDM Clock (IVCLK) Duty Cycle Range		40%		60%	

Copyright © 2013–2014, Texas Instruments Incorporated

Electrical Characteristics (continued)

VBAT = 3.6 V, AVDD = IOVDD = 1.8 V, EN = IOVDD, SWS = 0, Gain = 15 dB, ERC = 14 ns, R_L = 8 Ω + 33 µH, 48 kHz sample rate for digital input (unless otherwise noted)

PARAMETER		TEST CONDITIONS	MIN	TYP	MAX	UNIT
POWER CONSUMPTION						
	Power Consumption with Analog Input and IV Sense Disabled	From VBAT, PLL off, no signal		7.10		mA
		From AVDD, PLL off, no signal		3.73		mA
		From IOVDD, PLL off, no signal		0.04		mA
	Power Consumption with Digital Input and IV Sense Disabled	From VBAT, PLL off, no signal		7.31		mA
		From AVDD, PLL off, no signal		4.05		mA
		From IOVDD, PLL off, no signal		0.32		mA
	Power Consumption with Analog Input and IV Sense Enabled	From VBAT, PLL on, no signal		5.84		mA
		From AVDD, PLL on, no signal		7.10		mA
		From IOVDD, PLL on, no signal		0.32		mA
	Power Consumption with Digital Input and IV Sense Enabled	From VBAT, PLL on, no signal		7.32		mA
		From AVDD, PLL on, no signal		8.03		mA
		From IOVDD, PLL on, no signal		0.32		mA
	Power Consumption in Hardware Shutdown	From VBAT, EN = 0		0.1		µA
		From AVDD, EN = 0		0.2		µA
		From IOVDD, EN = 0		0.0		µA
	Power Consumption in Software Shutdown	From VBAT		11.4		µA
		From AVDD		9.1		µA
		From IOVDD		130		µA
DIGITAL INPUT / OUTPUT						
V_{IH}	High-level digital input voltage		0.7 x IOVDD			V
V_{IL}	Low-level digital input voltage				0.3 x IOVDD	V
V_{OH}	High-level digital output voltage		0.9 x IOVDD			V
V_{OL}	Low-level digital output voltage				0.1 x IOVDD	V
MISCELLANEOUS						
	AVDD Supply Under-voltage Threshold	Device is in reset state	0.9			V
		Device comes out of reset state			1.4	
	VBAT Supply Under-voltage Threshold	Device is in reset state	1.8			V
		Device comes out of reset state			2.5	

Copyright © 2013–2014, Texas Instruments Incorporated

6.6 Timing Requirements/Timing Diagrams

For I²C interface signals over recommended operating conditions (unless otherwise noted). **Note:** All timing specifications are measured at characterization but not tested at final test.

PARAMETER		TEST CONDITIONS	MIN	TYP	MAX	UNIT
f_{SCL}	Frequency, SCL	No wait states			400	kHz
$t_{W(H)}$	Pulse duration, SCL high		0.6			µs
$t_{W(L)}$	Pulse duration, SCL low		1.3			µs
t_{su1}	Setup time, SDA to SCL		100			ns
t_{h1}	Hold time, SCL to SDA		10			ns
$t_{(buf)}$	Bus free time between stop and start condition		1.3			µs
t_{su2}	Setup time, SCL to start condition		0.6			µs
t_{h2}	Hold time, start condition to SCL		0.6			µs
t_{su3}	Setup time, SCL to stop condition		0.6			µs

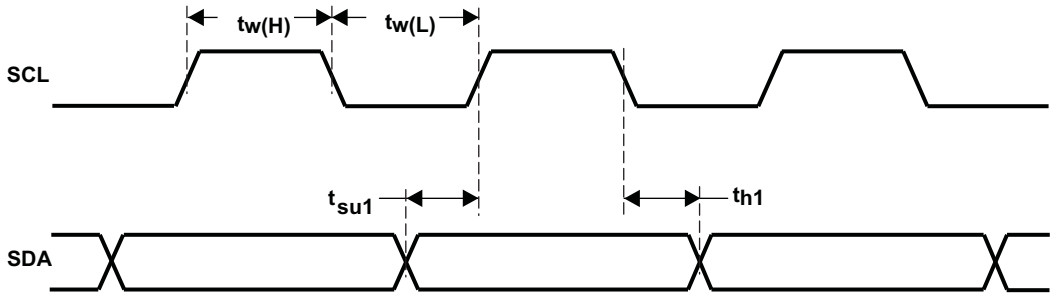

Figure 1. SCL and SDA Timing

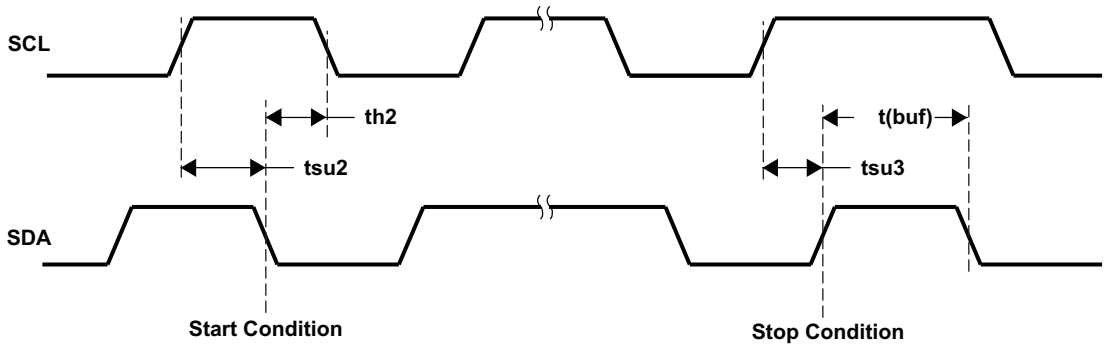

Figure 2. Start and Stop Conditions Timing

Copyright © 2013–2014, Texas Instruments Incorporated

6.7 Typical Characteristics

VBAT = 3.6 V, AVDD = IOVDD = 1.8 V, EN = IOVDD, SWS = 0, R_L = 8 Ω + 33 µH (unless otherwise noted).

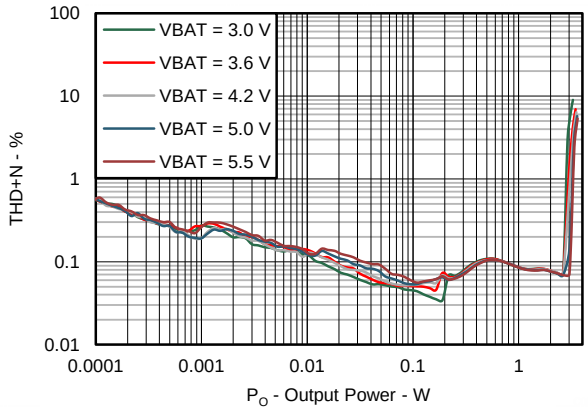

AGC = OFF, Gain = 15 dB

Figure 3. THD+N vs Output Power (8Ω) for Digital Input

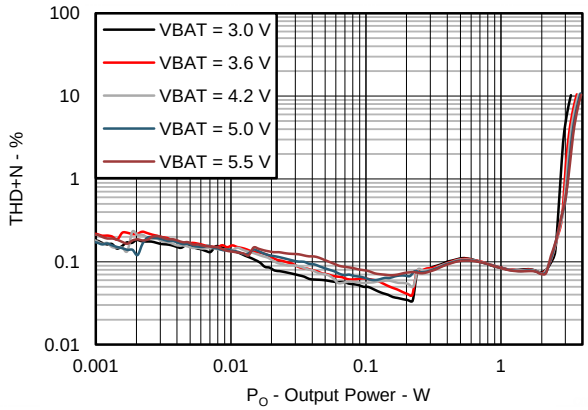

AGC = OFF, Gain = 15 dB

Figure 4. THD+N vs Output Power (6Ω) for Digital Input

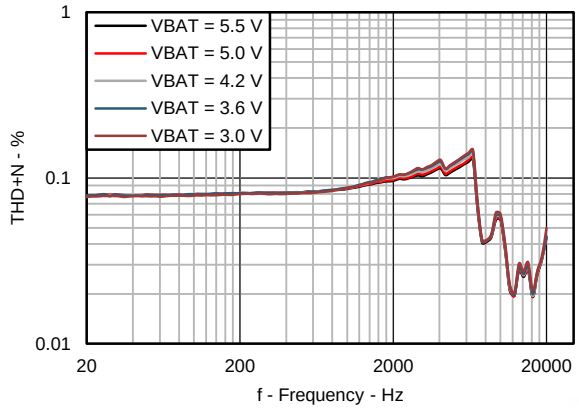

AGC = OFF, Gain = 15 dB, P_{out} = 1 W

Figure 5. THD+N vs Frequency (8Ω) for Digital Input

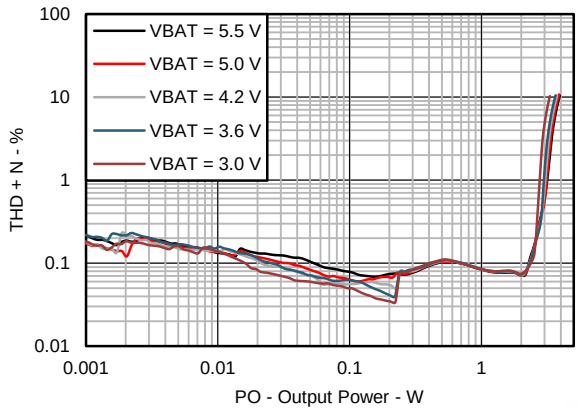

AGC = OFF, Gain = 15 dB, f = 1 kHz

Figure 6. THD+N vs Output Power (8Ω) for Analog Input

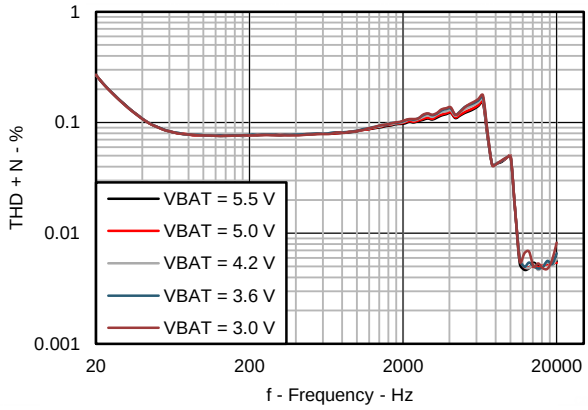

AGC = OFF, Gain = 15 dB

Figure 7. THD+N vs Frequency (8Ω) for Analog Input

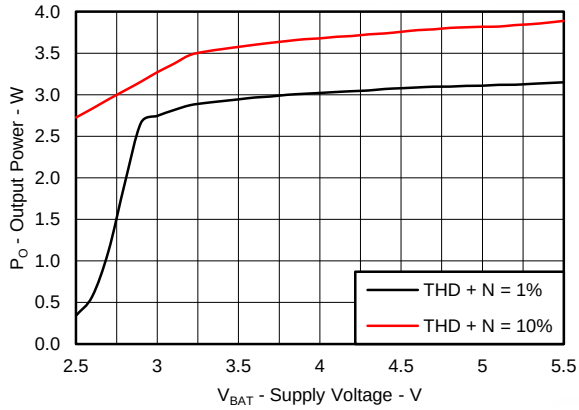

AGC = OFF, Gain = 15 dB, f = 1 kHz

Figure 8. Output Power for 1% and 10% THD+N vs Supply Voltage (8Ω)

Copyright © 2013–2014, Texas Instruments Incorporated

Typical Characteristics (continued)

VBAT = 3.6 V, AVDD = IOVDD = 1.8 V, EN = IOVDD, SWS = 0, R_L = 8 Ω + 33 µH (unless otherwise noted).

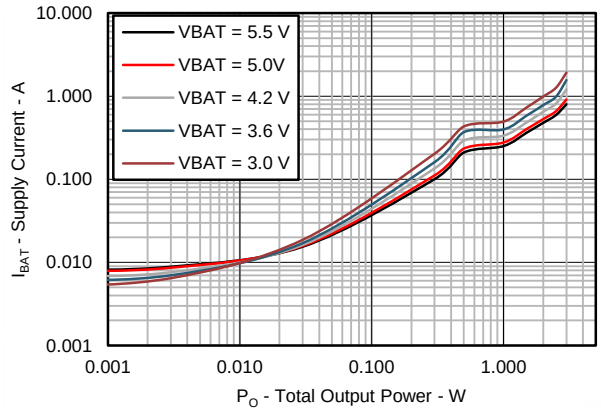

AGC = OFF, Gain = 15 dB, f = 1 kHz

Figure 9. VBAT Average Supply Current vs Class-D Output Power (8Ω)

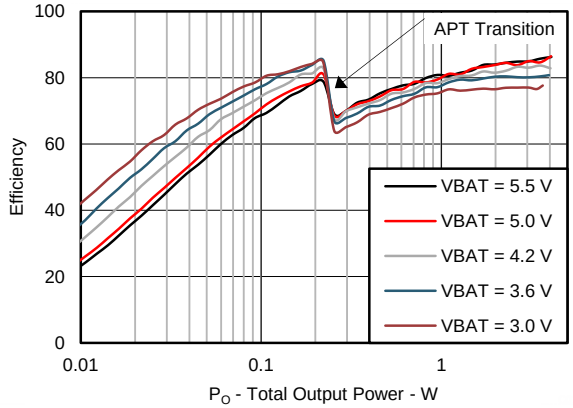

AGC = OFF, Gain = 15 dB, f = 1 kHz

Figure 10. Total Efficiency vs Output Power (8Ω)

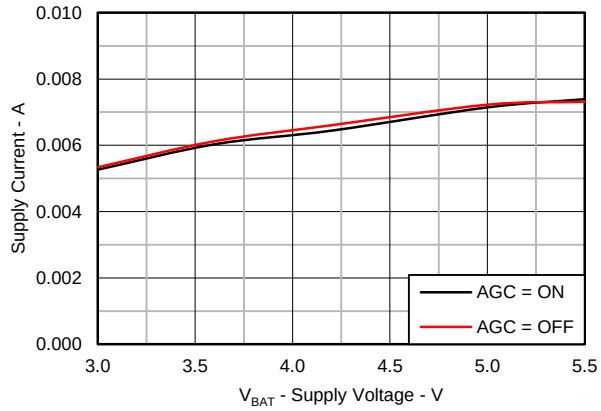

VBAT = 3.0, 3.6, 4.2, 5.0, 5.5 V

Figure 11. VBAT Quiescent Supply Current vs Supply Voltage

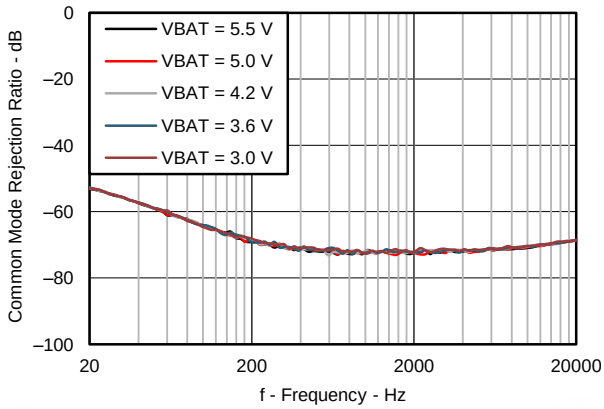

20 Hz to 20 kHz, Analog Input, Gain = 15 dB

Figure 12. Common Mode Rejection vs Frequency

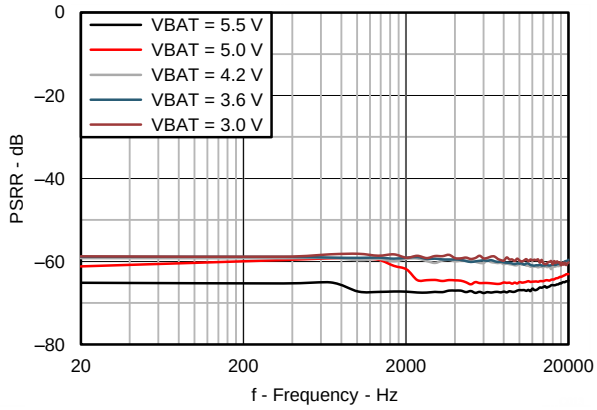

20 Hz to 20 kHz, Digital Input, Gain = 15 dB

Figure 13. VBAT Supply Ripple Rejection vs Frequency

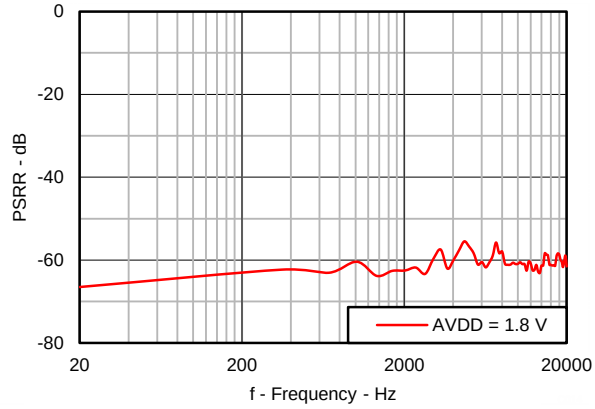

20 Hz to 20 kHz, Digital Input, AVDD = 1.8 V

Figure 14. AVDD Supply Ripple Rejection vs Frequency

Copyright © 2013–2014, Texas Instruments Incorporated

Typical Characteristics (continued)

VBAT = 3.6 V, AVDD = IOVDD = 1.8 V, EN = IOVDD, SWS = 0, R_L = 8 Ω + 33 µH (unless otherwise noted).

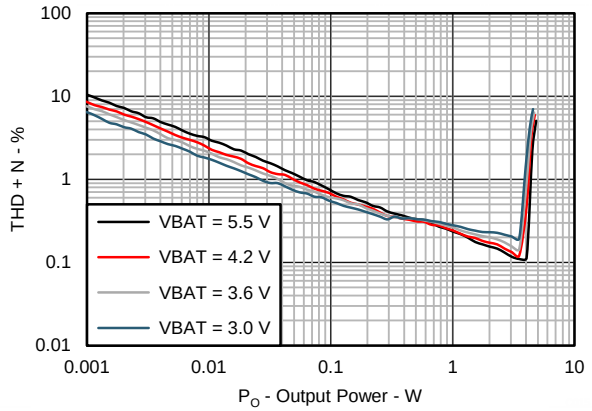

AGC = OFF, Gain = 15 dB

Figure 15. I-Sense THD+N vs Output Power (8Ω)

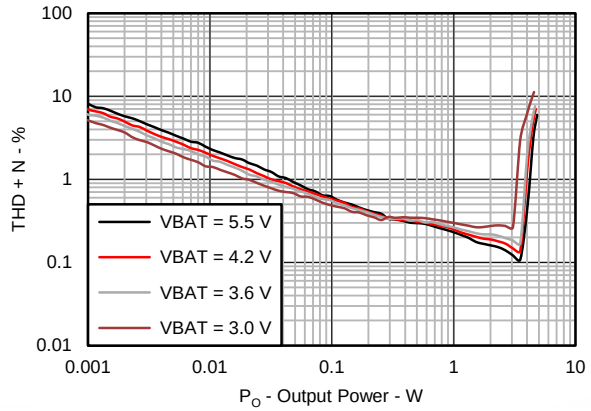

AGC = OFF, Gain = 15 dB

Figure 16. I-Sense THD+N vs Output Power (6Ω)

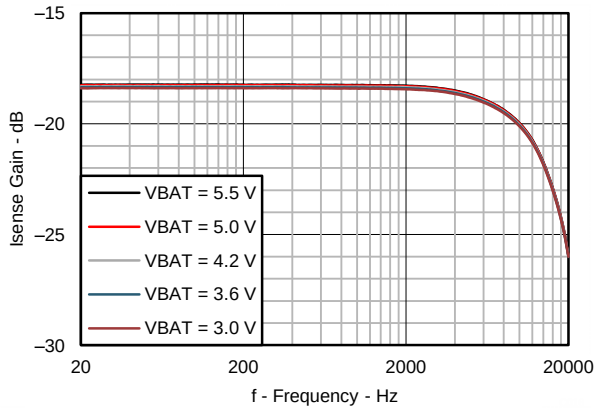

8 Ω Load, AGC = OFF, Gain = 15 dB

Figure 17. I-Sense THD+N vs Frequency (8Ω)

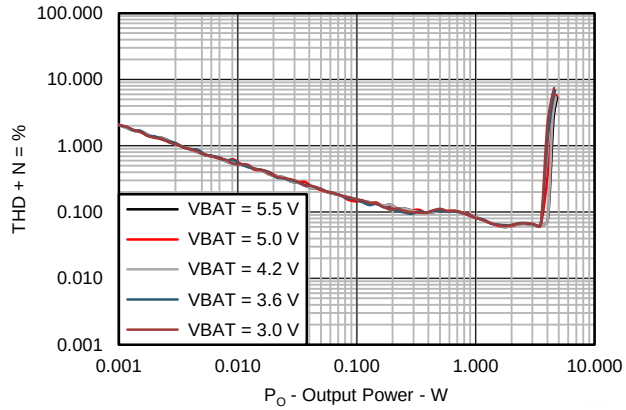

AGC = OFF, Input Level = -20 dBFS, Gain = 15 dB

Figure 18. V-Sense THD+N vs. Output Power (8Ω)

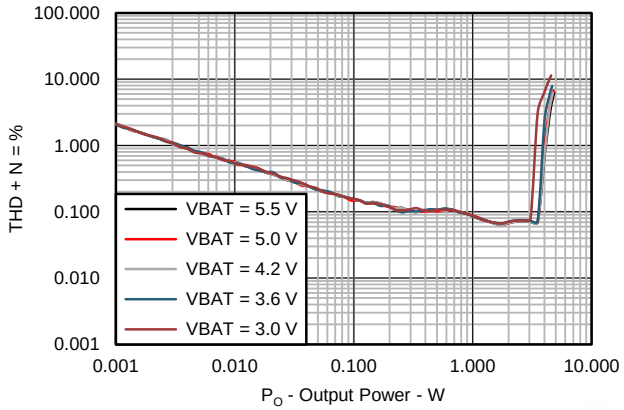

AGC = OFF, Input Level = -20 dBFS, Gain = 15 dB

Figure 19. V-Sense THD+N vs. Output Power (6Ω)

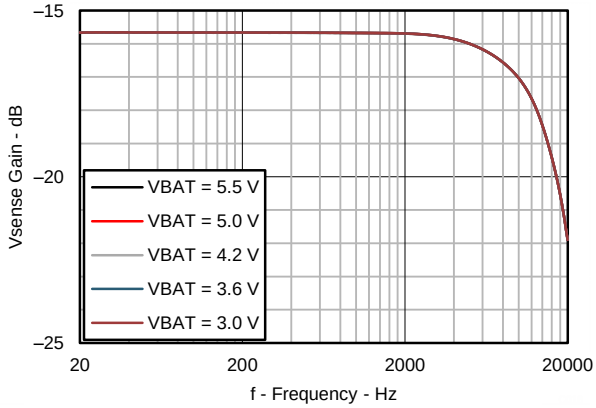

8 Ω Load, AGC = OFF, Input Level = -20 dBFS, Gain = 15 dB

Figure 20. V-Sense THD+N vs Frequency (8Ω)

Copyright © 2013–2014, Texas Instruments Incorporated

Typical Characteristics (continued)

VBAT = 3.6 V, AVDD = IOVDD = 1.8 V, EN = IOVDD, SWS = 0, R_L = 8 Ω + 33 µH (unless otherwise noted).

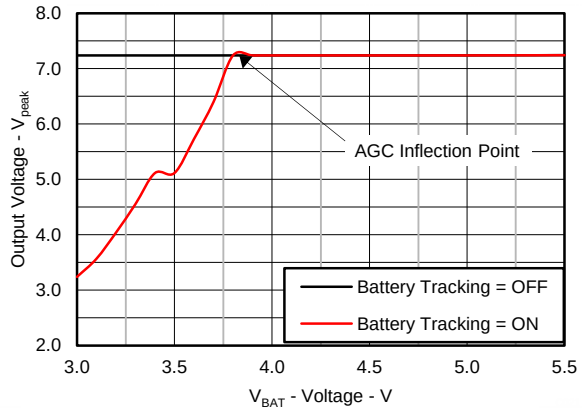

f = 1 kHz, 0 dBFS Gain = 15 dB,
Inflection point = 3.6 V, Slope = 4.5 V/V, No Load

Figure 21. Maximum Peak Output Voltage vs. Supply Voltage (8Ω)

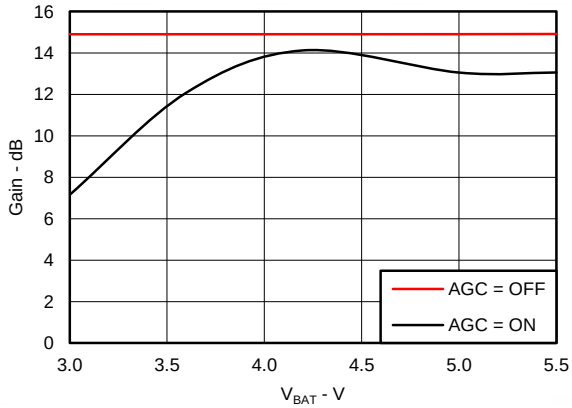

AGC = ON, Gain = 15 dB, f = 1 kHz, Inflection point = 3.6 V
Limiter value = 7.87 V, Slope = 4.5 V

Figure 22. Gain vs Supply Voltage

Copyright © 2013–2014, Texas Instruments Incorporated

7 Detailed Description

7.1 Overview

The TAS2553 is a high efficiency Class-D audio power amplifier with advanced battery current management and an integrated Class-G boost converter. The TAS2553 provides real-time output current and voltage information to the host processor via the I^2S, LJF, RJF, TDM, DSP, or PDM interface. This output current and voltage information is useful for speaker protection and sound enhancement algorithms, allowing the host to track the speaker impedance and to enable usage of lower-cost, wider tolerance speakers reliably pushed to their rated output power and beyond.

When auto-passthrough mode is enabled, the Class-G boost converter generates the Class-D amplifier supply rail. During low Class-D output power, the boost improves efficiency by deactivating and connecting VBAT directly to the Class-D amplifier supply. When high power audio is required, the boost quickly activates to provide significantly louder audio than a stand-alone amplifier connected directly to the battery.

The battery monitor and AGC work together in the Battery Tracking AGC to automatically adjust the Class-D gain to reduce battery current at end-of-charge voltage levels, preventing output clipping, distortion and early system shutdown. The fixed gain is adjustable via I^2C. The gain range is -7 dB to +24 dB in 1 dB steps.

In addition to a differential mono analog input, the TAS2553 has built-in a 16-bit D/A converter used with a digital input. The digital audio interface supports I^2S, Left-Justified, Right-Justified, DSP, PDM and TDM modes. Moving the D/A converter from the digital host processor into the integrated amplifier process provides better dynamic performance at lower system cost. Additionally, since the PCB routing is digital rather than analog, sensitivity to external perturbations such as GSM frame-rate noise is decreased at the system level.

Stereo configuration can be achieved with two TAS2553s by using the ADDR terminal to address each TAS2553 seperately. Set ADDR to ground to configure the device for I^2C address 0x40 (7-bit). Set ADDR to IOVDD for I^2C address 0x41 (7-bit). Refer to the General I^2C Operation section for more details.

7.2 Functional Block Diagram

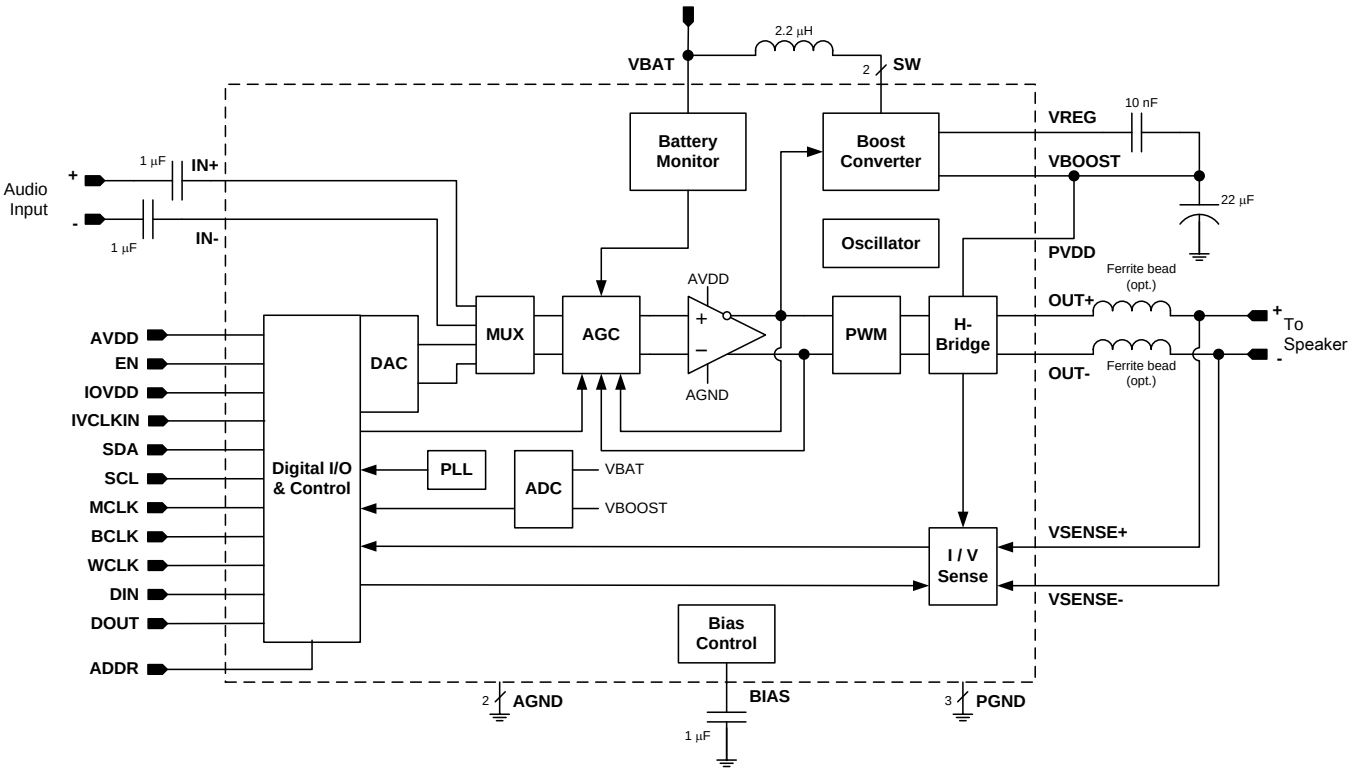

7.3 Feature Description

7.3.1 General I²C Operation

The TAS2553 operates as an I²C slave over the IOVDD voltage range. It is adjustable to one of two I²C addresses. This allows two TAS2553 devices in a system to connect to the same I²C bus.

Set the ADDR terminal to ground to assign the device I²C address to 0x40 (7-bit). This is equivalent to 0x80 (8-bit) for writing and 0x81 (8-bit) for reading.

Set ADDR to IOVDD for I²C address 0x41 (7-bit). This is equivalent to 0x82 (8-bit) for writing and 0x83 (8-bit) for reading.

The I²C bus employs two signals, SDA (data) and SCL (clock), to communicate between integrated circuits in a system. The bus transfers data serially, one bit at a time. The address and data 8-bit bytes are transferred most-significant bit (MSB) first. In addition, each byte transferred on the bus is acknowledged by the receiving device with an acknowledge bit. Each transfer operation begins with the master device driving a start condition on the bus and ends with the master device driving a stop condition on the bus. The bus uses transitions on the data terminal (SDA) while the clock is at logic high to indicate start and stop conditions. A high-to-low transition on SDA indicates a start, and a low-to-high transition indicates a stop. Normal data-bit transitions must occur within the low time of the clock period. Figure 23 shows a typical sequence.

The master generates the 7-bit slave address and the read/write (R/W) bit to open communication with another device and then waits for an acknowledge condition. The TAS2553 holds SDA low during the acknowledge clock period to indicate acknowledgment. When this occurs, the master transmits the next byte of the sequence. Each device is addressed by a unique 7-bit slave address plus R/W bit (1 byte). All compatible devices share the same signals via a bi-directional bus using a wired-AND connection.

Use external pull-up resistors for the SDA and SCL signals to set the logic-high level for the bus. Use pull-up resistors between 660 Ω and 4.7 kΩ. Do not allow the SDA and SCL voltages to exceed the TAS2553 supply voltage, IOVDD.

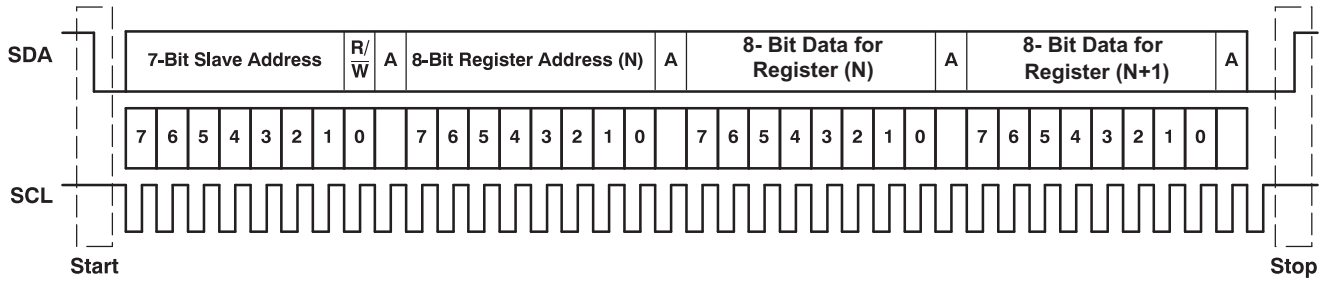

Figure 23. Typical I²C Sequence

There is no limit on the number of bytes that can be transmitted between start and stop conditions. When the last word transfers, the master generates a stop condition to release the bus. Figure 23 shows a generic data transfer sequence.

7.3.2 Single-Byte and Multiple-Byte Transfers

The serial control interface supports both single-byte and multiple-byte read/write operations for all registers. During multiple-byte read operations, the TAS2553 responds with data, a byte at a time, starting at the register assigned, as long as the master device continues to respond with acknowledges.

The TAS2553 supports sequential I²C addressing. For write transactions, if a register is issued followed by data for that register and all the remaining registers that follow, a sequential I²C write transaction has taken place. For I2C sequential write transactions, the register issued then serves as the starting point, and the amount of data subsequently transmitted, before a stop or start is transmitted, determines to how many registers are written.

Copyright © 2013–2014, Texas Instruments Incorporated

Feature Description (continued)

7.3.3 Single-Byte Write

As shown in Figure 24, a single-byte data-write transfer begins with the master device transmitting a start condition followed by the I²C device address and the read/write bit. The read/write bit determines the direction of the data transfer. For a write-data transfer, the read/write bit must be set to 0. After receiving the correct I²C device address and the read/write bit, the TAS2553 responds with an acknowledge bit. Next, the master transmits the register byte corresponding to the TAS2553 internal memory address being accessed. After receiving the register byte, the TAS2553 again responds with an acknowledge bit. Finally, the master device transmits a stop condition to complete the single-byte data-write transfer.

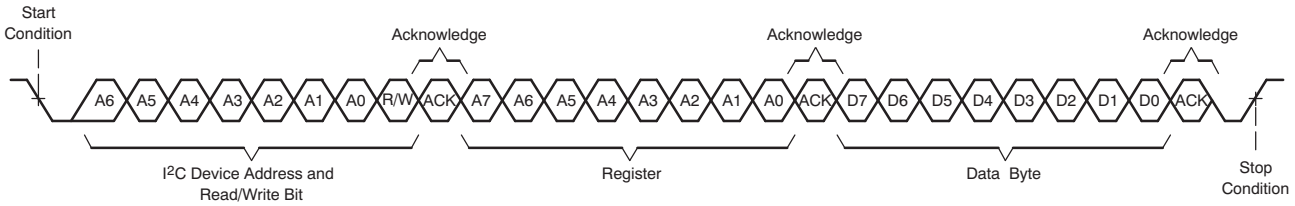

Figure 24. Single-Byte Write Transfer

7.3.4 Multiple-Byte Write and Incremental Multiple-Byte Write

A multiple-byte data write transfer is identical to a single-byte data write transfer except that multiple data bytes are transmitted by the master device to the TAS2553 as shown in Figure 25. After receiving each data byte, the TAS2553 responds with an acknowledge bit.

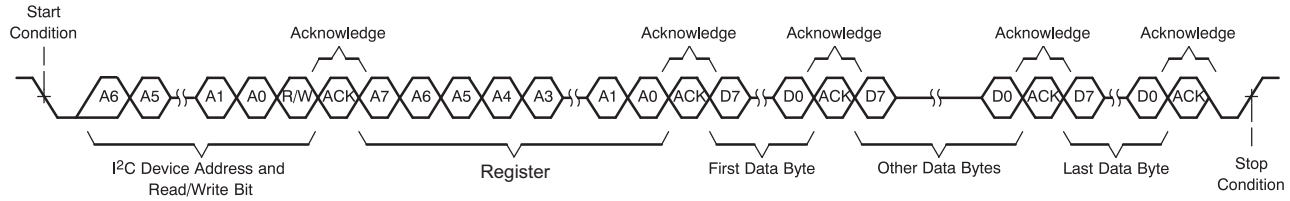

Figure 25. Multiple-Byte Write Transfer

7.3.5 Single-Byte Read

As shown in Figure 26, a single-byte data-read transfer begins with the master device transmitting a start condition followed by the I²C device address and the read/write bit. For the data-read transfer, both a write followed by a read are actually done. Initially, a write is done to transfer the address byte of the internal memory address to be read. As a result, the read/write bit is set to a 0.

After receiving the TAS2553 address and the read/write bit, the TAS2553 responds with an acknowledge bit. The master then sends the internal memory address byte, after which the TAS2553 issues an acknowledge bit. The master device transmits another start condition followed by the TAS2553 address and the read/write bit again. This time, the read/write bit is set to 1, indicating a read transfer. Next, the TAS2553 transmits the data byte from the memory address being read. After receiving the data byte, the master device transmits a not-acknowledge followed by a stop condition to complete the single-byte data read transfer.

The device address is 0x40 (7-bit). This is equivalent to 0x81 (8-bit) for reading.

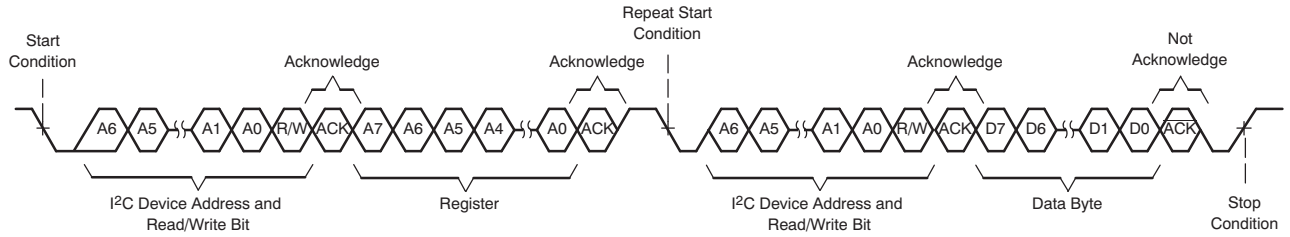

Figure 26. Single-Byte Read Transfer

Copyright © 2013–2014, Texas Instruments Incorporated

Feature Description (continued)

7.3.6 Multiple-Byte Read

A multiple-byte data-read transfer is identical to a single-byte data-read transfer except that multiple data bytes are transmitted by the TAS2553 to the master device as shown in Figure 27. With the exception of the last data byte, the master device responds with an acknowledge bit after receiving each data byte.

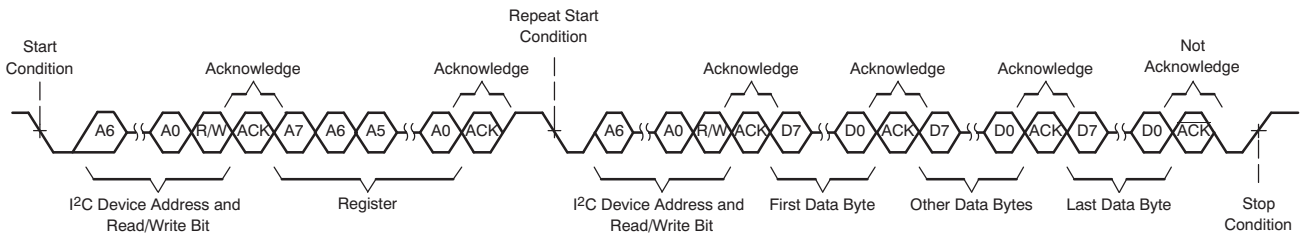

Figure 27. Multiple-Byte Read Transfer

7.3.7 PLL

The TAS2553 has an on-chip PLL to generate the clock frequency for the audio DAC and I-V sensing ADCs. The programmability of the PLL allows operation from a wide variety of clocks that may be available in the system.

The PLL input supports clocks varying from 512 kHz to 24.576 MHz and is register programmable to enable generation of required sampling rates with fine resolution. Set Register 0x02, D(3) = 1 to activate the PLL. When the PLL is enabled, the PLL output clock PLL_CLK is:

$$PLL_CLK = \frac{0.5 \times PLL_CLKIN \times J.D}{2^P} \tag{1}$$

J = 4, 5, 6, … 96
D = 0, 1, 2, ... 9999
P = 0,1

Choose J, D, P such that PLL_CLK = 22.5792 MHz (44.1ksps sampling rate) or 24.5760 MHz (48ksps sampling rate). Program variable J in Register 0x08, D(6:0). Program variable D in Register 0x09, D(5:0) and Register 0x0A, D(7:0). The default value for D is 0. Program variable P in Register 0x08, D(7). The default value for P is 0.

Register 0x01, D(5:4) sets the PLL_CLKIN input to MCLK, BCLK, or IVCLKIN. Set Register 0x01, D(5:4) = 00 to use MCLK, 01 to use BCLK, and 10 to use IVCLKIN.

There is also an option to use a 1.8 MHz internal oscillator for PLL_CLKIN. This is useful for systems using the analog inputs and the I-V sense data returning to a host processor via PDM mode interface. Set Register 0x01, D(5:4) = 11 to use the 1.8 MHz internal oscillator.

To bypass the PLL, set Register 0x09, D(7) = 1. Deactivate the PLL by setting Register 0x02, D(3) = 0.

When the PLL is enabled, the following conditions must be satisfied:

- If D = 0, the PLL clock input (PLL_CLKIN) must satisfy:
  $$512\text{ kHz} \le \frac{PLL_CLKIN}{2^P} \le 12.288\text{ MHz}$$
- If D ≠ 0, the PLL clock input (PLL_CLKIN) must satisfy:
  $$1.1\text{ MHz} \le \frac{PLL_CLKIN}{2^P} \le 9.2\text{ MHz}$$

Figure 28 shows the clock distribution tree and the registers required to set the audio input DAC and the I-V sense ADC.

Copyright © 2013–2014, Texas Instruments Incorporated

Feature Description (continued)

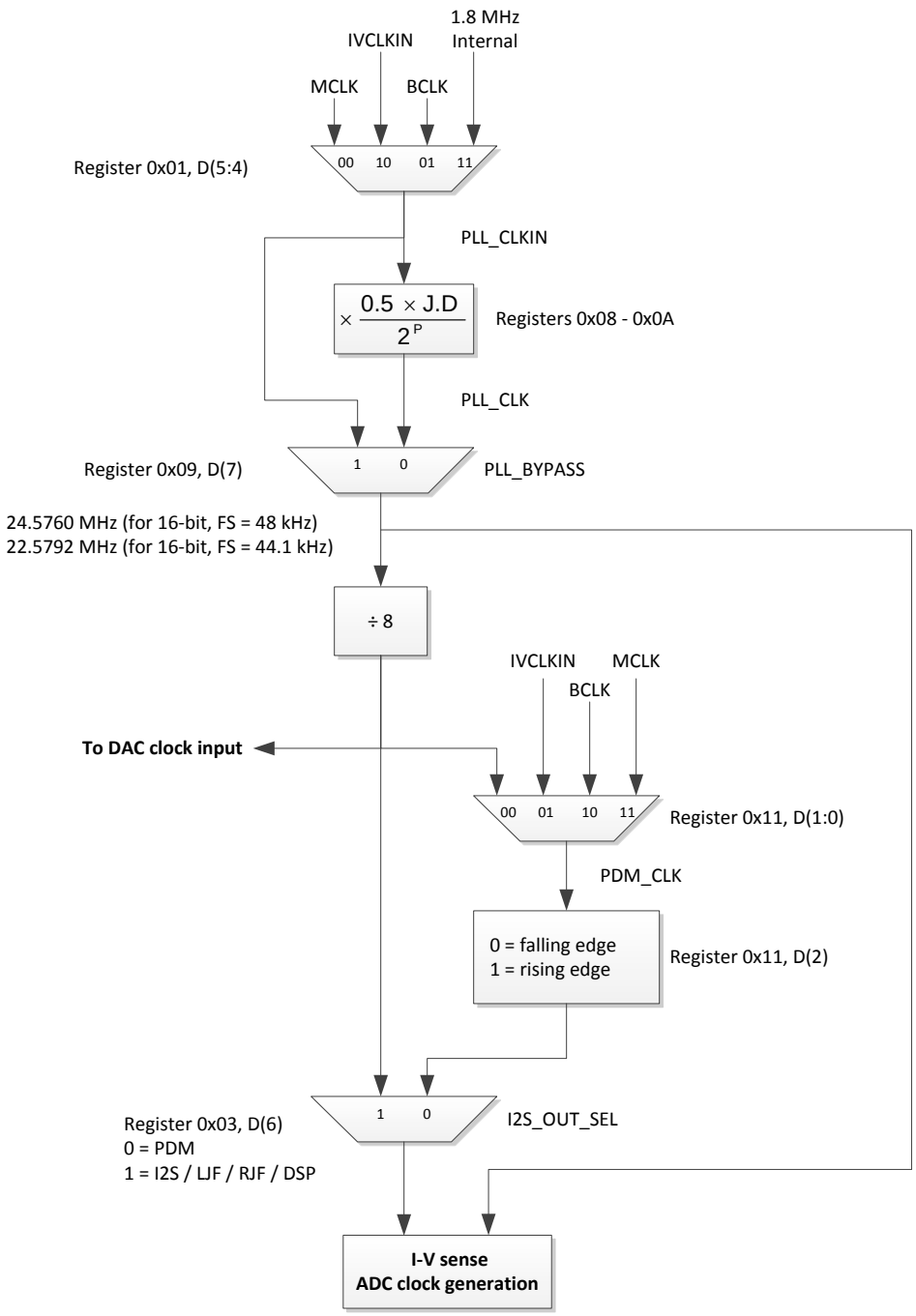

Figure 28. Clock Distribution Tree

7.3.8 Gain Settings

The TAS2553 has one gain register for both analog input and digital input (DAC output) gain. A mux selects only one of these inputs for the Class-D speaker amplifier. The analog and digital inputs cannot be mixed together.

The full-scale DAC output voltage is the same as the maximum analog input voltage (for less than 1% THD): 1 V_{RMS}, or 1.4 V_{PEAK}.

Table 1. TAS2553 Gain Table

GAIN BYTE: GAIN[4:0]	NOMINAL GAIN	GAIN BYTE: GAIN[4:0]	NOMINAL GAIN
00000	–7 dB	10000	9 dB
00001	–6 dB	10001	10 dB
00010	–5 dB	10010	11 dB
00011	–4 dB	10011	12 dB
00100	–3 dB	10100	13 dB
00101	–2 dB	10101	14 dB
00110	–1 dB	10110	15 dB
00111	0 dB	10111	16 dB
01000	1 dB	11000	17 dB
01001	2 dB	11001	18 dB
01010	3 dB	11010	19 dB
01011	4 dB	11011	20 dB
01100	5 dB	11100	21 dB
01101	6 dB	11101	22 dB
01110	7 dB	11110	23 dB
01111	8 dB	11111	24 dB

7.3.9 Class-D Edge Rate Control

The edge rate of the Class-D output is controllable via an I^2C register. This allows users the ability to adjust the switching edge rate of the Class-D amplifier, trading off some efficiency for lower EMI. Table 2 lists the typical edge rates.

Table 2. Class-D Edge Rate Control

ERC BYTE: EDGE[2:0]	T_R AND T_F (TYPICAL)
000	50 ns
001	40 ns
010	30 ns
011	25 ns
100	14 ns
101	13 ns
110	12 ns
111	11 ns

Copyright © 2013–2014, Texas Instruments Incorporated

7.3.10 Battery Tracking AGC

The TAS2553 monitors battery voltage and the audio signal to automatically decrease gain when the battery voltage is low and audio output power is high. This finds the optimal gain to maximize loudness and minimize battery current, providing louder audio and preventing early shutdown at end-of-charge battery voltage levels.

This does not mean the battery tracking AGC automatically decreases amplifier gain when VBAT is below the inflection point. Rather, gain is decreased only when the Class-D output voltage exceeds the limiter level.

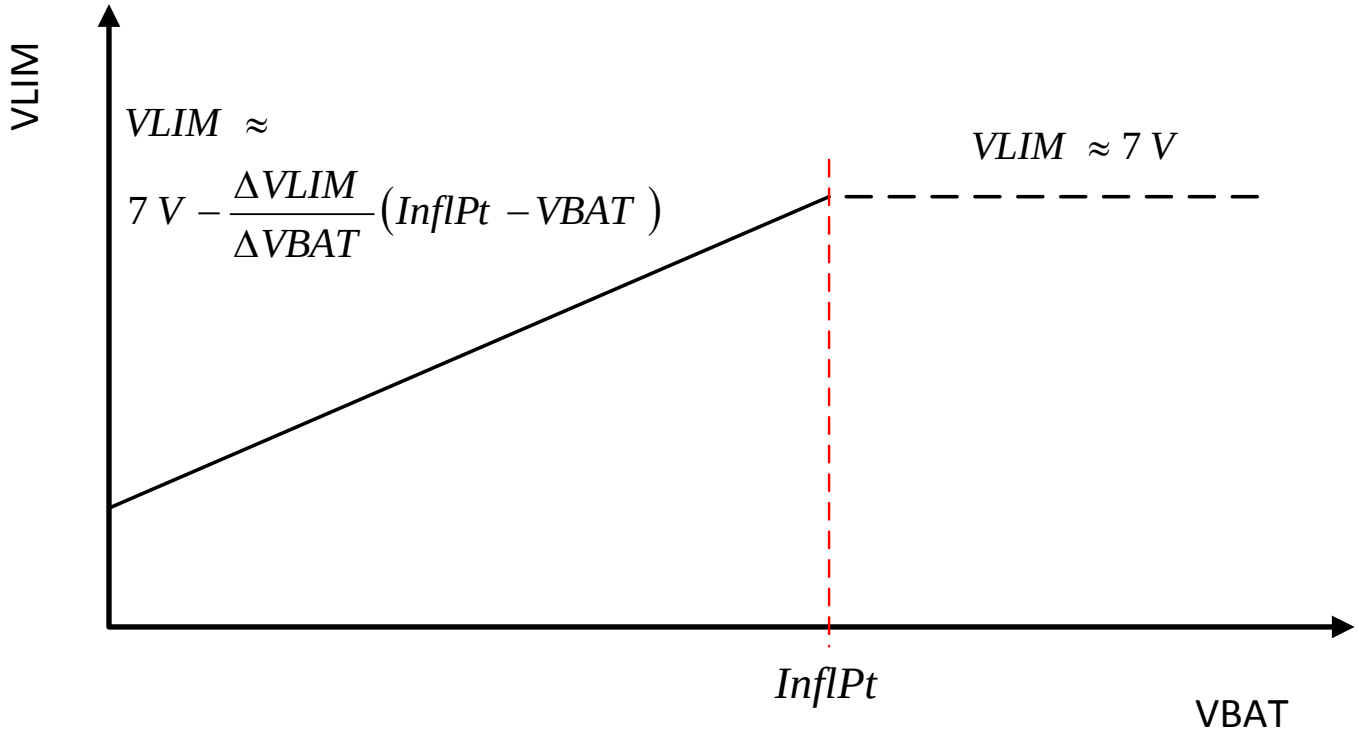

Figure 29. VLIM versus Supply Voltage (VBAT)

When VBAT is greater than the inflection point, VLIM - the peak allowed output voltage - is set by the boost voltage. The inflection point is set in Register 0x0B, Bits 7-0. The inflection point range is 3.0 V to 5.5 V, adjustable in 17.33 mV steps.

When VBAT is less than the inflection point, the peak output voltage is controlled by the slope. Set the VLIM vs. VBAT slope in Register 0x0C, Bits 7-0. This ΔVLIM / ΔVBAT range is 1.2 V/V to 10.75 V/V and is adjustable in 37.3 mV/V steps.

If the audio signal is higher than VLIM, then the gain decreases until the audio signal is just below VLIM. The gain decrease rate (attack time) is set via the I^2C interface. If the audio signal is below VLIM and the gain is below the fixed gain, the gain will increase. The gain increase rate (release time) is set via the I^2C interface. The attack and release times are selected via I^2C interface. Eight attack times are available in 350 µs / dB steps. Sixteen release times are in 105 ms / dB steps. ATK_TIME[2:0] is Register 0x0E, Bits 0-2. REL_TIM[3:0] is Register 0x0F, Bits 3-0.

Table 3. Attack Time Selection

ATTACK TIME REGISTER BYTE: ATK_TIME[2:0]	ATTACK TIME (µS / STEP)
000	20
001	370
010	720
011	1070
100	1420

Copyright © 2013–2014, Texas Instruments Incorporated

Table 3. Attack Time Selection (continued)

ATTACK TIME REGISTER BYTE: ATK_TIME[2:0]	ATTACK TIME (µS / STEP)
101	1770
110	2120
111	2470

Table 4. Release Time Selection

RELEASE TIME REGISTER BYTE: REL_TIME[3:0]	RELEASE TIME (MS / STEP)	RELEASE TIME REGISTER BYTE: REL_TIME[4:0]	RELEASE TIME (MS / STEP)
0000	50	1000	890
0001	155	1001	995
0010	260	1010	1100
0011	365	1011	1205
0100	470	1100	1310
0101	575	1101	1415
0110	680	1110	1520
0111	785	1111	1625

7.4 Device Functional Modes

7.4.1 Audio Digital I/O Interface

Audio data is transferred between the host processor and the TAS2553 via the digital audio data serial interface, or audio bus. The audio bus on this device is very flexible, including left or right-justified data options, support for I^2S or PCM protocols, programmable data length options, a TDM mode for multichannel operation, very flexible master/slave configurability for each bus clock line, and the ability to communicate with multiple devices within a system directly.

The audio bus of the TAS2553 can be configured for left or right-justified, I^2S, DSP, or TDM modes of operation, where communication with standard telephony PCM interfaces is supported within the TDM mode. These modes are all MSB-first, with data width programmable as 16, 20, 24, or 32 bits by configuring Register 0x05, D(1:0). In addition, the word clock and bit clock can be independently configured in either Master or Slave mode, for flexible connectivity to a wide variety of processors. The word clock is used to define the beginning of a frame, and may be programmed as either a pulse or a square-wave signal. The frequency of this clock corresponds to the maximum of the selected ADC and DAC sampling frequencies.

The bit clock is used to clock in and clock out the digital audio data across the serial bus. This signal can be programmed to generate variable clock pulses by controlling the bit-clock multiply-divide factor in Registers 0x08 through 0x10. The number of bit-clock pulses in a frame may need adjustment to accommodate various word-lengths as well as to support the case when multiple TAS2553 devices may share the same audio bus.

The TAS2553 also includes a feature to offset the position of start of data transfer with respect to the word-clock. This offset is in number of bit-clocks and is programmed in Register 0x06.

To place the DOUT line into a Hi-Z (3-state) condition during all bit clocks when valid data is not being sent, set Register 0x04, D(2) = 1. By combining this capability with the ability to program what bit clock in a frame the audio data begins, time-division multiplexing (TDM) can be accomplished. This enables the use of multiple devices on a single audio serial data bus. When the audio serial data bus is powered down while configured in master mode, the terminals associated with the interface are put into a Hi-Z output state.

7.4.1.1 Right-Justified Mode

Set Register 0x03, D(6) = 0 and Register 0x05, D(3:2) = 10 to place the TAS2553 audio interface into right-justified mode. In right-justified mode, the LSB of the left channel is valid on the rising edge of the bit clock preceding the falling edge of the word clock. Similarly, the LSB of the right channel is valid on the rising edge of the bit clock preceding the rising edge of the word clock.

 Copyright © 2013–2014, Texas Instruments Incorporated

Device Functional Modes (continued)

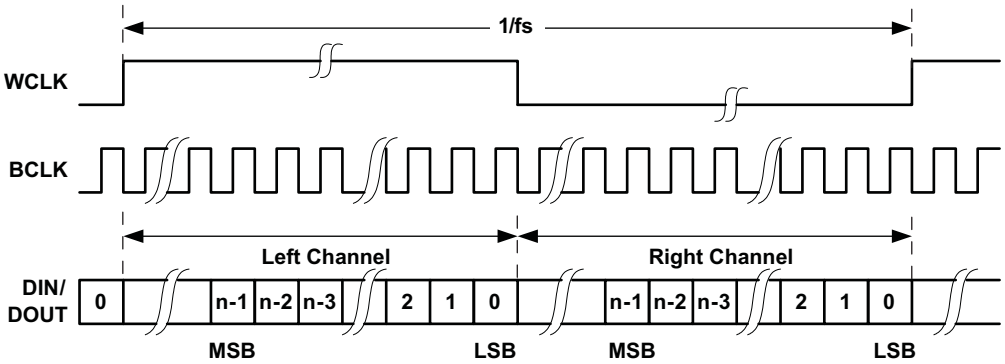

Figure 30. Timing Diagram for Right-Justified Mode

For right-justified mode, the number of bit-clocks per frame should be greater than twice the programmed word-length of the data.

7.4.1.2 Left-Justified Mode

Set Register 0x03, D(7:6) = 01 and Register 0x05, D(3:2) = 11 to place the TAS2553 audio interface into left-justified mode. In left-justified mode, the MSB of the right channel is valid on the rising edge of the bit clock following the falling edge of the word clock. Similarly the MSB of the left channel is valid on the rising edge of the bit clock following the rising edge of the word clock.

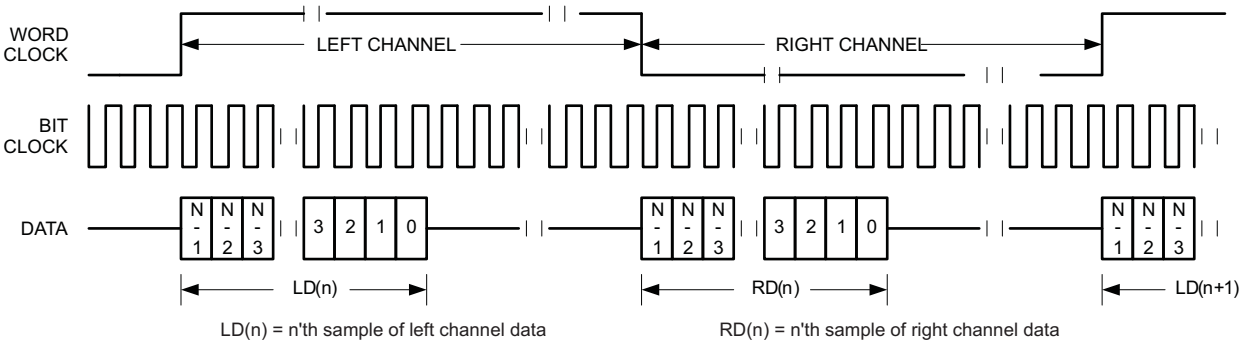

Figure 31. Timing Diagram for Left-Justified Mode

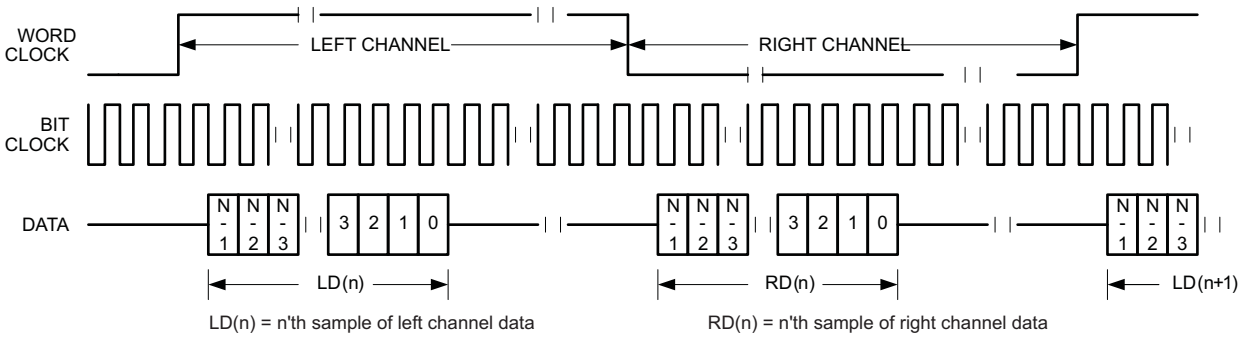

Figure 32. Timing Diagram for Light-Left Mode with Offset=1

Device Functional Modes (continued)

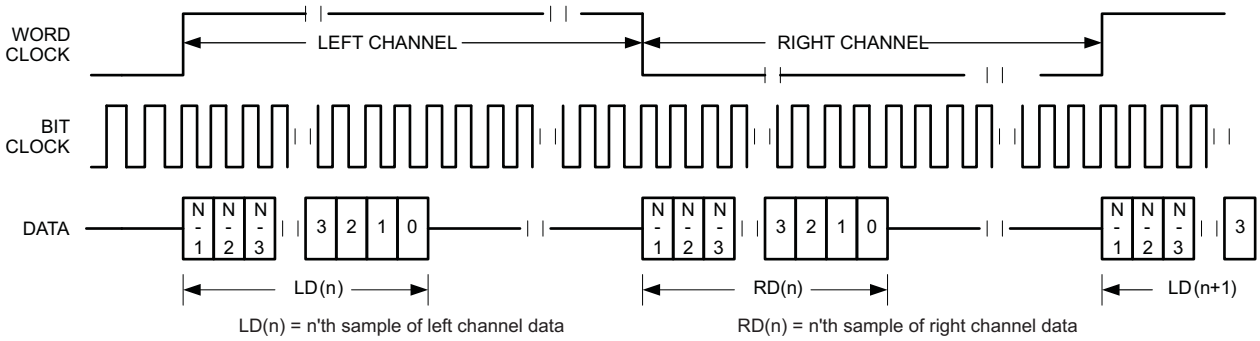

Figure 33. Timing Diagram for Left-Justified Mode with Offset=0 and Inverted Bit Clock

For left-justified mode, the number of bit-clocks per frame should be greater than twice the programmed word-length of the data. Also, the programmed offset value should be less than the number of bit-clocks per frame by at least the programmed word-length of the data.

7.4.1.3 I²S Mode

Set Register 0x03, D(7:6) = 01 and Register 0x05, D(3:2) = 00 to place the TAS2553 audio interface into I²S mode. In I²S mode, the MSB of the left channel is valid on the second rising edge of the bit clock after the falling edge of the word clock. Similarly the MSB of the right channel is valid on the second rising edge of the bit clock after the rising edge of the word clock.

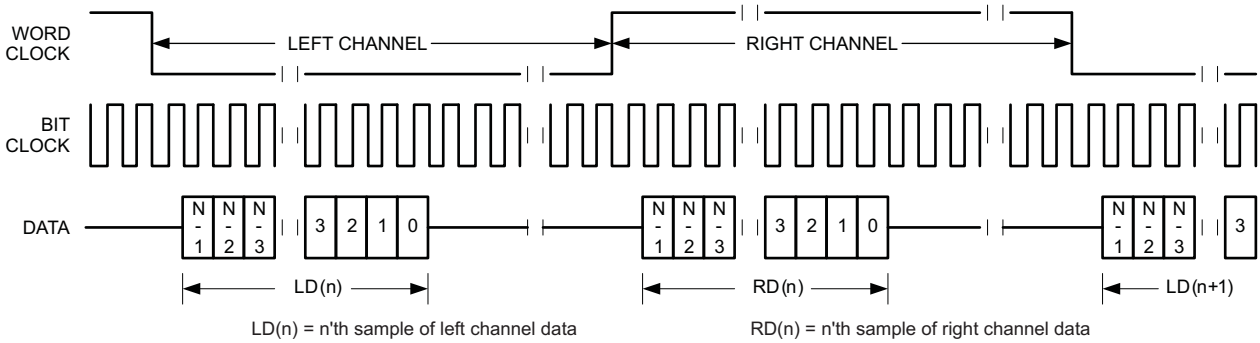

Figure 34. Timing Diagram for I²S Mode

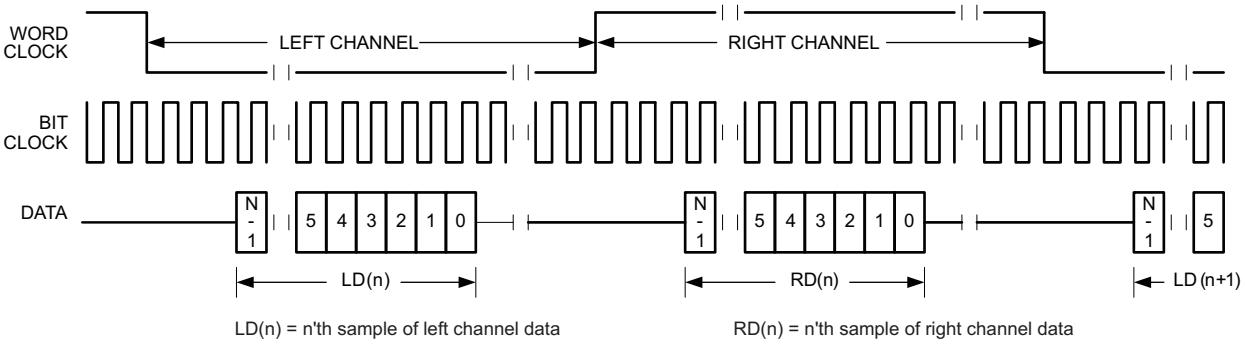

Figure 35. Timing Diagram for I²S Mode with Offset=2

Copyright © 2013–2014, Texas Instruments Incorporated

Device Functional Modes (continued)

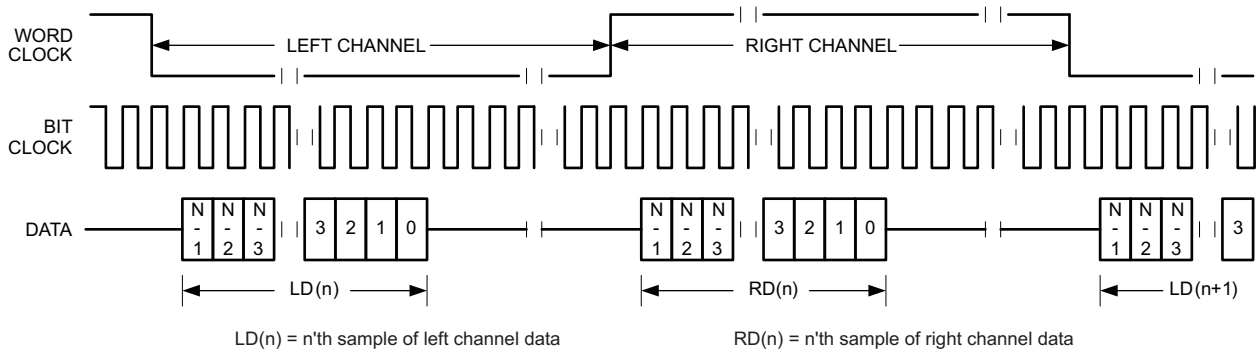

Figure 36. Timing Diagram for I²S Mode with Offset=0 and Inverted Bit Clock

For I²S mode, the number of bit-clocks per channel should be greater than or equal to the programmed word-length of the data. Also the programmed offset value should be less than the number of bit-clocks per frame by at least the programmed word-length of the data.

7.4.1.4 Audio Data Serial Interface Timing (I²S, Left-Justified, Right-Justified Modes)

All specifications at 25°C, IOVDD = 1.8 V

NOTE
All timing specifications are measured at characterization but not tested at final test.

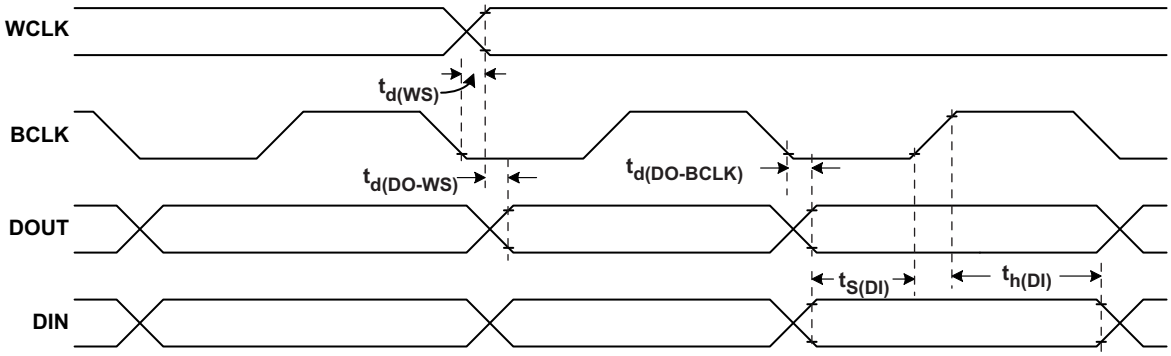

Figure 37. I²S/LJF/RJF Timing in Master Mode

Table 5. I²S/LJF/RJF Timing in Master Mode (see Figure 37)

PARAMETER		IOVDD=1.8V		IOVDD=3.3V		UNIT
		MIN	MAX	MIN	MAX	
t_d(WS)	WCLK delay		30		20	ns
t_d(DO-WS)	WCLK to DOUT delay (For LJF Mode only)		50		25	ns
t_d(DO-BCLK)	BCLK to DOUT delay		50		25	ns
t_s(DI)	DIN setup	8		8		ns
t_h(DI)	DIN hold	8		8		ns
t_r	Rise time		24		12	ns
t_f	Fall time		24		15	ns

Copyright © 2013–2014, Texas Instruments Incorporated

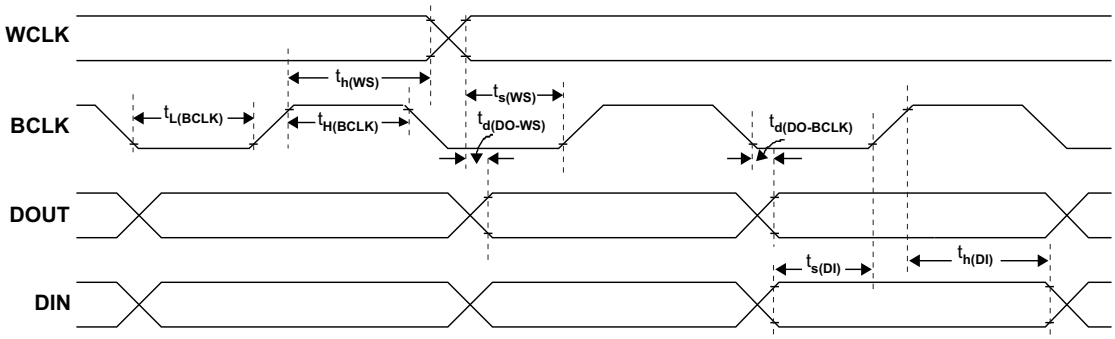

Figure 38. I²S/LJF/RJF Timing in Slave Mode

Table 6. I²S/LJF/RJF Timing in Slave Mode (see Figure 38)

PARAMETER		IOVDD=1.8V		IOVDD=3.3V		UNIT
		MIN	MAX	MIN	MAX	
t_H(BCLK)	BCLK high period	35		35		ns
t_L(BCLK)	BCLK low period	35		35		ns
t_s(WS)	(WS)	8		8		ns
t_h(WS)	WCLK hold	8		8		ns
t_d(DO-WS)	WCLK to DOUT delay (For LJF Mode only)		50		25	ns
t_d(DO-BCLK)	BCLK to DOUT delay		50		25	ns
t_s(DI)	DIN setup	8		8		ns
t_h(DI)	DIN hold	8		8		ns
t_r	Rise time		4		4	ns
t_f	Fall time		4		4	ns

Copyright © 2013–2014, Texas Instruments Incorporated

7.4.1.5 DSP Mode

Set Register 0x03, D(7:6) = 01 and Register 0x05, D(3:2) = 01 to place the TAS2553 audio interface into DSP mode. In DSP mode, the rising edge of the word clock starts the data transfer with the left channel data first and immediately followed by the right channel data. Each data bit is valid on the falling edge of the bit clock.

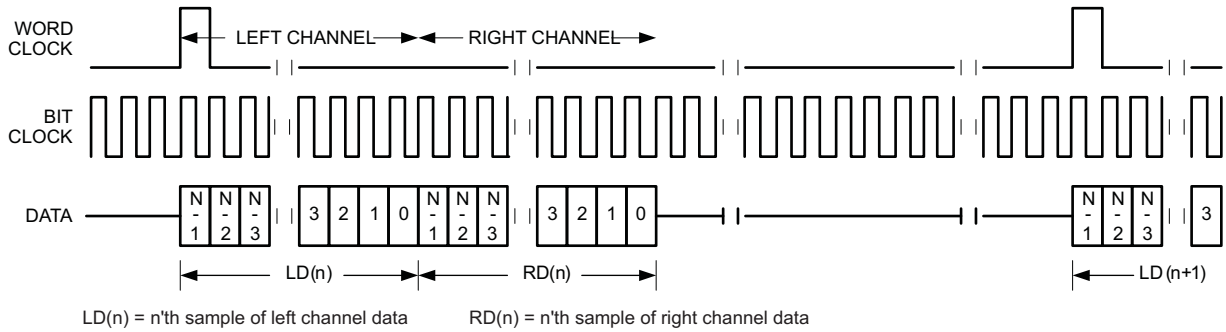

Figure 39. Timing Diagram for DSP Mode

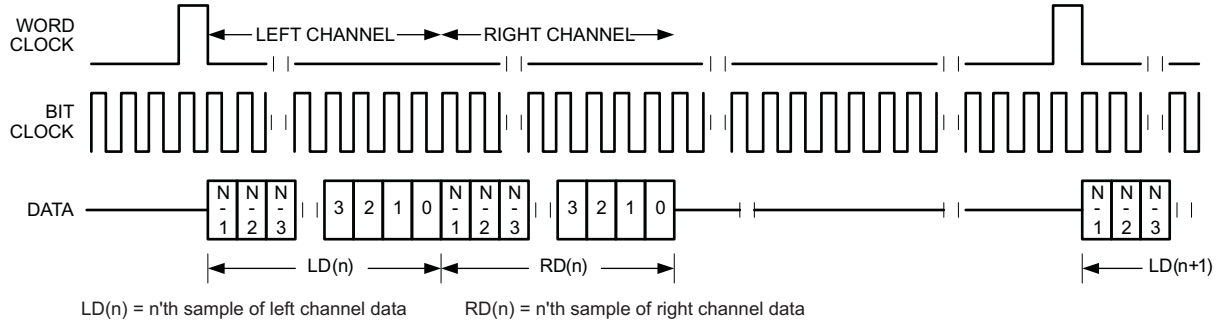

Figure 40. Timing Diagram for DSP Mode with Offset=1

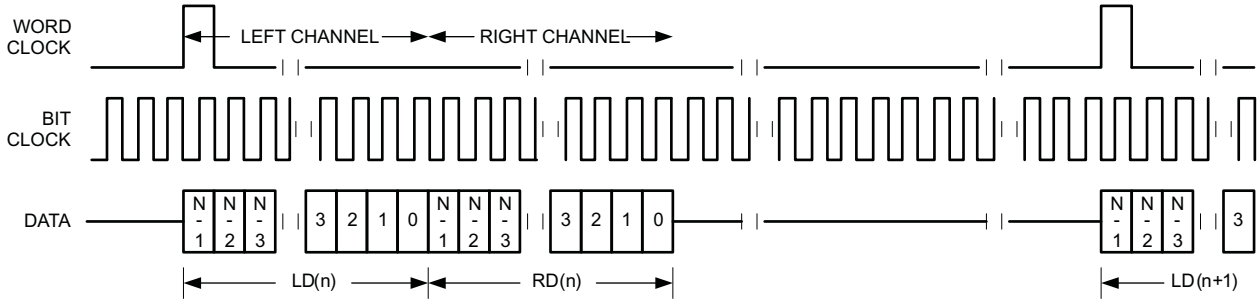

Figure 41. Timing Diagram for DSP Mode with Offset=0 and Inverted Bit Clock

For DSP mode, the number of bit-clocks per frame should be greater than twice the programmed word-length of the data. Also the programmed offset value should be less than the number of bit-clocks per frame by at least the programmed word-length of the data.

7.4.1.6 DSP Timing

All specifications at 25°C, IOVDD = 1.8 V

NOTE
All timing specifications are measured at characterization but not tested at final test.

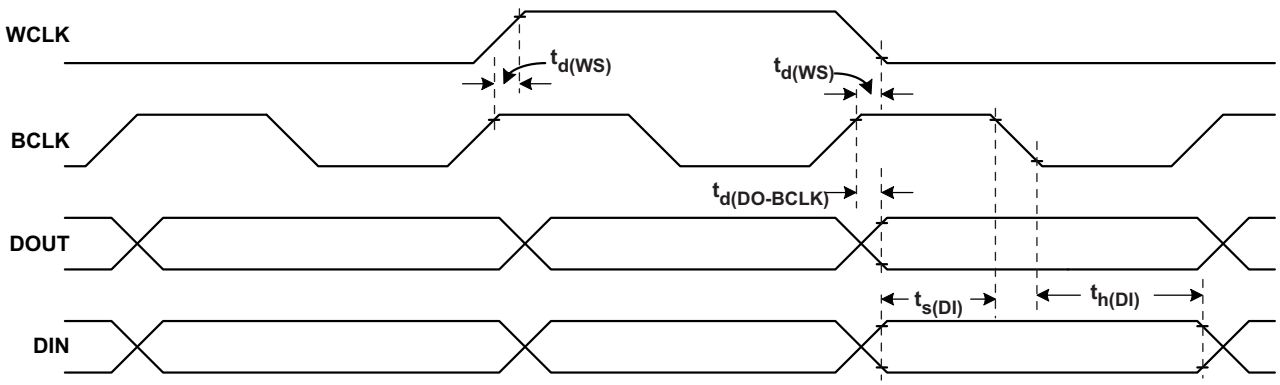

Figure 42. DSP Timing in Master Mode

Table 7. DSP Timing in Master Mode (see Figure 42)

PARAMETER		IOVDD=1.8V		IOVDD=3.3V		UNIT
		MIN	MAX	MIN	MAX	
t_d(WS)	WCLK delay		30		20	ns
t_d(DO-BCLK)	BCLK to DOUT delay		40		20	ns
t_s(DI)	DIN setup	8		8		ns
t_h(DI)	DIN hold	8		8		ns
t_r	Rise time		4		4	ns
t_f	Fall time		4		4	ns

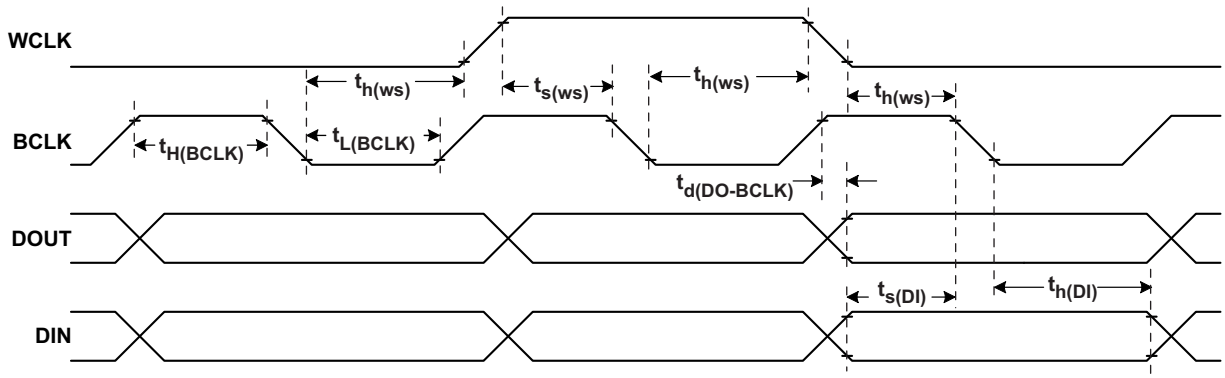

Figure 43. DSP Timing in Slave Mode

Copyright © 2013–2014, Texas Instruments Incorporated

Table 8. DSP Timing in Slave Mode (see Figure 43)

PARAMETER		IOVDD=1.8V		IOVDD=3.3V		UNIT
		MIN	MAX	MIN	MAX	
t_H(BCLK)	BCLK high period	35		35		ns
t_L(BCLK)	BCLK low period	35		35		ns
t_s(WS)	(WS)	8		8		ns
t_h(WS)	WCLK hold	8		8		ns
t_d(DO-WS)	WCLK to DOUT delay (For LJF Mode only)		40		22	ns
t_s(DI)	DIN setup	8		8		ns
t_h(DI)	DIN hold	8		8		ns
t_r	Rise time		4		4	ns
t_f	Fall time		4		4	ns

7.4.2 TDM Mode

Time-division multiplexing (TDM) allows two or more devices to share a common DIN connection and a common DOUT connection. Using TDM mode, all devices transmit their DOUT data in user-specified sub-frames within one WCLK period. When one device transmits its DOUT information, the other devices place their DOUT terminals in a high impedance tri-state mode.

TDM mode is useable with I^2S, LJF, RJF, and DSP interface modes. Refer to the respective sections for a description of how to set the TAS2553 into those modes. TDM cannot be used with PDM mode. This is because the PDM requires a continuous stream of samples from one data source.

Use Register 0x06 to set the clock cycle offset from WCLK to the MSB. Each data bit is valid on the falling edge of the bit clock. Set Register 0x04, D(2) = 1 to force DOUT into tri-state when it is not transmitting data. This allows DOUT terminals from multiple TAS2553 devices to share a common wire to the host.

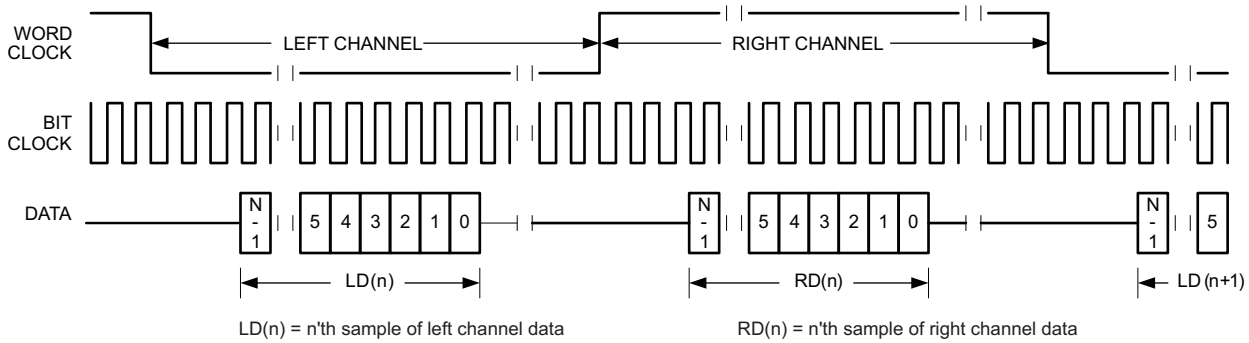

Figure 44. Timing Diagram for I^2S in TDM Mode with Offset=2

For TDM mode, the number of bit-clocks per frame should be less than the programmed word-length of the data. Also the programmed offset value should be less than the number of bit-clocks per frame by at least the programmed word-length of the data.

Figure 45 shows how to configure the TAS2553 with the TI codec, AIC3254, with both devices sharing DIN and DOUT

Copyright © 2013–2014, Texas Instruments Incorporated

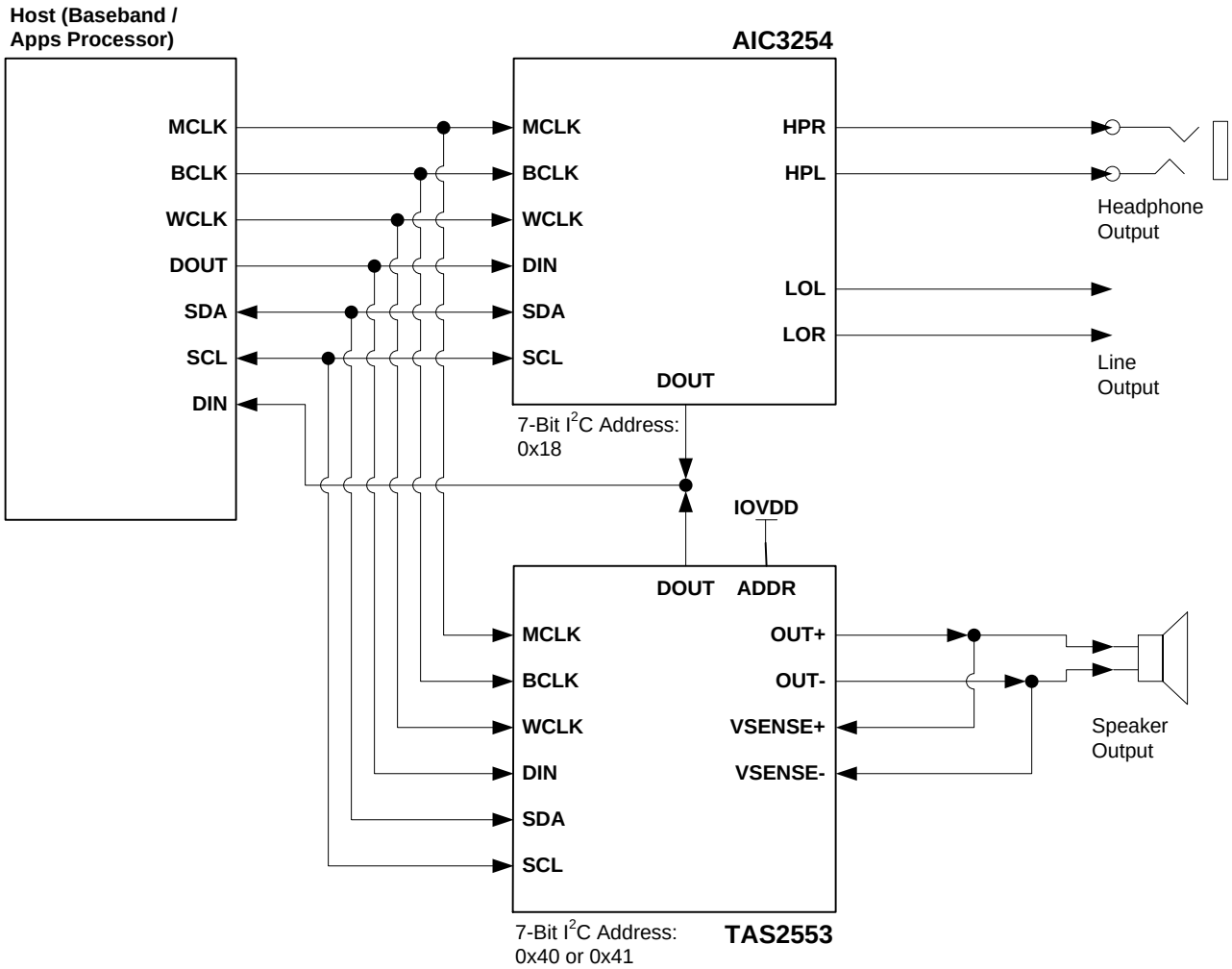

Figure 45. Configuration with TAS2553 and AIC3254 Muxed in TDM Mode

Copyright © 2013–2014, Texas Instruments Incorporated

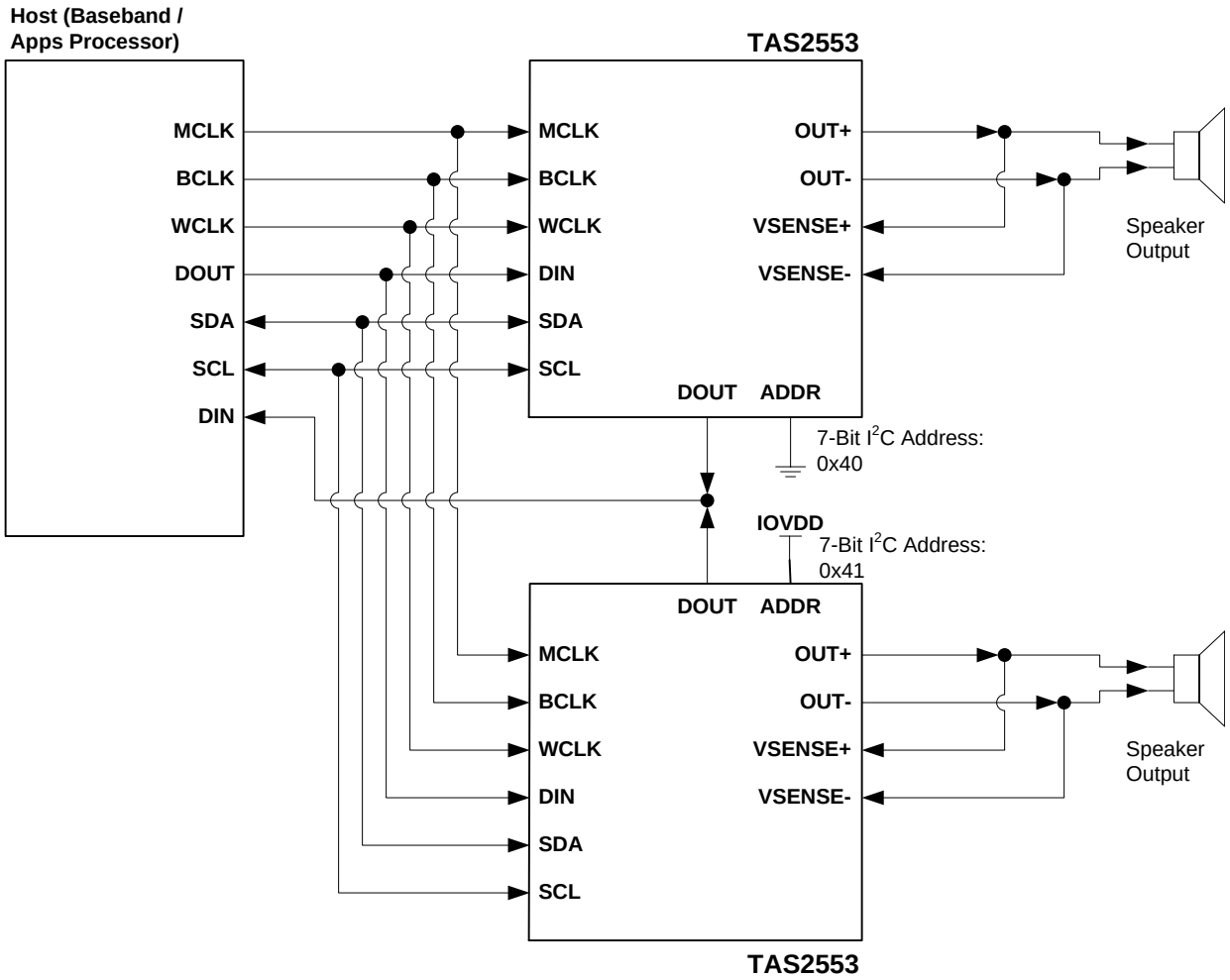

Figure 46. Stereo Configuration with Two TAS2553 DOUT Muxed in TDM Mode

7.4.3 PDM Mode

Set Register 0x03, D(7:6) = 00 to place the TAS2553 audio interface into PDM mode. In PDM mode, the data stream is a continuous stream of undecimated pulse-modulated data that is 64x the sample rate. Because it is a continuous stream, frame synchronization is not required and WCLK is not used. Specifying clocks-per-frame is not required for PDM mode. The PDM input bit clock is IVCLKIN as set in Register 0x11, D(1:0).

The TAS2553 can be configured for I^2S input mode and PDM output mode. Figure 47 shows the timing diagram for PDM input mode. Timing specifications are listed in Table 9 and Table 10.

The TAS2553 clocks PDM input data on either the rising edge or falling edge of IVCLKIN as set in Register 0x11, D(2). The device does not read concurrent data on both edges. Set the I^2C register to read either rising clock edge or falling clock edge data.

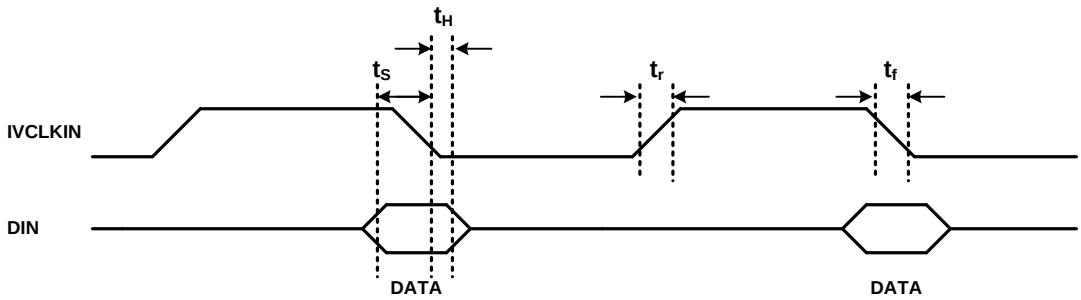

Figure 47. DIN Timing Diagram in PDM Mode, Register 0x11, D(2) = 0

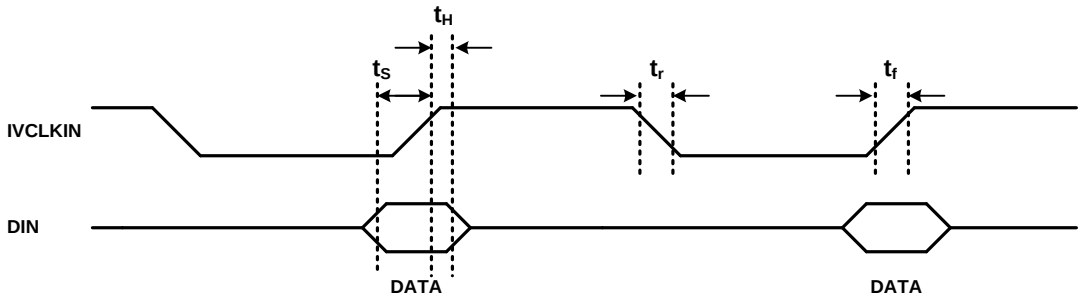

Figure 48. DIN Timing Diagram in PDM Mode, Register 0x11, D(2) = 1

Table 9. PDM Input Timing (1)

PARAMETER		IOVDD=1.8V (2)		IOVDD=3.3V		UNIT
		MIN	MAX	MIN	MAX	
t_s	DIN setup	20		20		ns
t_h	DIN hold	3		3		ns
t_r	Rise time		4		4	ns
t_f	Fall time		4		4	ns

(1) All timing specifications are measured at characterization but not tested at final test.
(2) All specifications at 25°C, IOVDD = 1.8 V

7.4.3.1 DOUT Timing – PDM Output Mode

Set Register 0x03, D(6) = 0 to transmit PDM data on the DOUT terminal. Register 0x07, D(7:6) selects either I Data, V Data, or both for PDM transmission. Register 0x07, D(5) selects whether the data transmits on either the rising edge or the falling edge of IVCLKIN. The DOUT terminal becomes high-impedance on the opposing clock cycle.

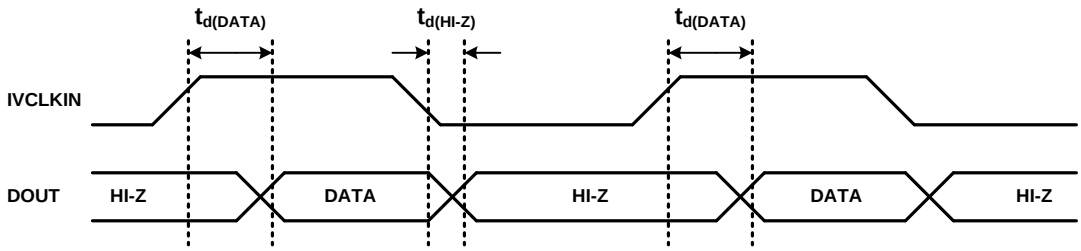

Figure 49. DOUT Timing in PDM Mode (Data on IVCLKIN High)

Copyright © 2013–2014, Texas Instruments Incorporated

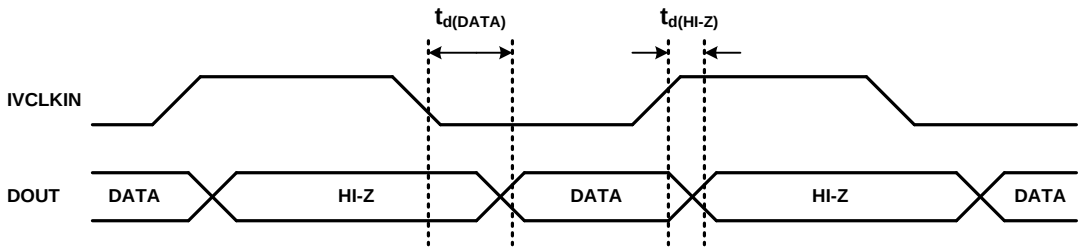

Figure 50. DOUT Timing in PDM Mode (Data on IVCLKIN Low)

Table 10. DOUT Timing in PDM Mode(1)

PARAMETER		IOVDD=1.8V(2)		IOVDD=3.3V		UNIT
		MIN	MAX	MIN	MAX	
t_d(DATA)	IVCLKIN to DOUT delay		30		30	ns
t_d(HI-Z)	IVCLKIN to high impedance state delay		6		6	ns

(1) All timing specifications are measured at characterization but not tested at final test.
(2) All specifications at 25°C, IOVDD = 1.8 V

7.5 Register Map

The TAS2553 I²C address is 0x40 (7-bit) when ADDR = 0 and 0x41 (7-bit) when ADDR = 1. See the General I²C Operation section for more details.

7.5.1 Register Map Summary

REGISTER		READ/WRITE	DEFAULT	FUNCTION
DEC	HEX			
0	0x00	R/W	0x00	Device Status Register
1	0x01	R/W	0x22	Configuration Register 1
2	0x02	R/W	0xFF	Configuration Register 2
3	0x03	R/W	0x80	Configuration Register 3
4	0x04	R/W	0x00	DOUT Tristate Mode
5	0x05	R/W	0x00	Serial Interface Control Register 1
6	0x06	R/W	0x00	Serial Interface Control Register 2
7	0x07	R/W	0xC0	Output Data Register
8	0x08	R/W	0x10	PLL Control Register 1
9	0x09	R/W	0x00	PLL Control Register 2
10	0x0A	R/W	0x00	PLL Control Register 3
11	0x0B	R/W	0x8F	Battery Tracking Inflection Point Register
12	0x0C	R/W	0x80	Battery Tracking Slope Control Register
13	0x0D	R/W	0xBE	Limiter Level Control Register
14	0x0E	R/W	0x08	Limiter Attack Rate and Hysteresis Time
15	0x0F	R/W	0x05	Limiter Release Rate
16	0x10	R/W	0x00	Limiter Integration Count Control
17	0x11	R/W	0x01	PDM Configuration Register
18	0x12	R/W	0x00	PGA Gain Register
19	0x13	R/W	0x40	Class-D Edge Rate Control Register
20	0x14	R/W	0x00	Boost Auto-Pass Through Control Register
21	0x15	R/W	0x00	Reserved
22	0x16	R	0x00	Version Number
23	0x17	R/W	0x00	Reserved

Copyright © 2013–2014, Texas Instruments Incorporated

Register Map (continued)

REGISTER		READ/WRITE	DEFAULT	FUNCTION
DEC	HEX			
24	0x18	R	0x00	Reserved
25	0x19	R	0x00	VBAT Data Register

7.5.2 Register 0x00: Device Status Register

This register uses latched faults. The fault bits are clear on write. Read-only commands retain the latched value of the fault bit.

BIT	NAME	READ/WRITE	DEFAULT	DESCRIPTION
7-6		R/W	00	Reserved. Write only default values.
5	PLL_OUT_OF_LOCK	R/W	0	PLL lock 0 = PLL is locked 1 = PLL is not locked
4-2		R/W	0	Reserved. Write only default values.
1	CLASSD_ILIM	R/W	0	Class-D over-current 0 = Normal operation 1 = Class-D output current limit has been exceeded
0	THERMAL	R/W	0	Thermal limit 0 = Normal operation 1 = Limit exceeded

7.5.3 Register 0x01: Configuration Register 1

BIT	NAME	READ/WRITE	DEFAULT	DESCRIPTION
7-6		R/W	00	Reserved. Write only default values.
5-4	PLL_SRC	R/W	10	PLL Input 00 = MCLK 01 = BCLK 10 = IVCLKIN 11 = 1.8 MHz fixed internal oscillator
3		R/W	0	Reserved. Write only default values.
2	MUTE	R/W	0	Triggers mute of Class-D channel controller. 0 = Not muted 1 = Muted
1	SWS	R/W	1	Software shutdown. When high shuts down all blocks and places part in low power mode. THIS BIT MUST BE SET TO ZERO ONLY AFTER THE DEVICE CONFIGURATION IS COMPLETE.
0	DEV_RESET	R/W	0	Synchronous reset of all digital registers & control circuitry.

7.5.4 Register 0x02: Configuration Register 2

BIT	NAME	READ/WRITE	DEFAULT	DESCRIPTION
7	CLASSD_EN	R/W	1	Class D Enable
6	BOOST_EN	R/W	1	Boost Enable
5	APT_EN	R/W	1	Auto Pass-Thru Enable
4	RESERVED	R/W	0	Reserved. Write only default values.
3	PLL_EN	R/W	1	PLL Enable
2	LIM_EN	R/W	1	Battery Tracking AGC Enable
1	IVSENSE_EN	R/W	1	I/V Sense Enable
0	RESERVED	R/W	1 (1)	Reserved. MUST BE WRITTEN TO ZERO DURING CONFIGURATION SEQUENCE as shown in Initialization.

(1) Register 0x02, Bit 0 defaults to 1, but must be written to 0 during initialization.

Copyright © 2013–2014, Texas Instruments Incorporated

7.5.5 Register 0x03: Configuration Register 3

BIT	NAME	READ / WRITE	DEFAULT	DESCRIPTION
7	ANALOG_IN_SEL	R/W	1	Selects analog in path for data to class-D. When set to zero (digital in), no signal should be present on the analog terminals. 0 = Digital Audio Input 1 = Analog Audio Input
6	I2S_OUT_SEL	R/W	0	Selects between PDM and I2S for I/V Sense output data format. 0 = PDM 1 = I2S
5	PDM_IN_SEL	R/W	0	Selects PDM as input to modulator 0 = PDM is not selected 1 = PDM is selected only if Digital Audio Input is selected (Reg 0x03 D[7] = 0)
4-3	DIN_SOURCE_SEL	R/W	00	DIN Source Select 00 = Modulator input muted 01 = Use left stream for modulator 10 = Use right stream for modulator 11 = Use average of left and right streams for modulator
2-0	WCLK_FREQ	R/W	000	WCLK Frequency 000 = 8 kHz 001 = 11.025 kHz / 12 kHz 010 = 16 kHz 011 = 22.05 kHz / 24 kHz 100 = 32 kHz 101 = 44.1 kHz / 48 kHz 110 = 88.2 kHz / 96 kHz 111 = 176.4 kHz / 192 kHz

7.5.6 Register 0x04: DOUT Tristate Mode

For systems with multiple devices sharing a common DOUT line with a TDM interface mode, set Bit 2 to 1 to ensure DOUT stays in high-impedance tri-state mode when it is not transmitting data.

BIT	NAME	READ / WRITE	DEFAULT	DESCRIPTION
7-3		R/W	0000 0	Reserved. Write only default values.
2	SDOUT_TRISTATE	R/W	0	DOUT Tri-state Mode (for I2S mode only, see Reg 0x03, bit 7) 0 = DOUT set to logic low when not transmitting data 1 = DOUT in tristate when not transmitting data
1-0		R/W	00	Reserved. Write only default values.

Copyright © 2013–2014, Texas Instruments Incorporated

7.5.7 Register 0x05: Serial Interface Control Register 1

BIT	NAME	READ/WRITE	DEFAULT	DESCRIPTION
7	WCLKDIR	R/W	0	WCLK Direction 0 = WCLK is an input terminal 1 = WCLK is an output terminal
6	BCLKDIR	R/W	0	BCLK Direction 0 = BCLK is an input terminal 1 = BCLK is an output terminal
5-4	CLKSPERFRAME	R/W	00	Clocks per Frame 00 = 32 clocks 01 = 64 clocks 10 = 128 clocks 11 = 256 clocks
3-2	DATAFORMAT	R/W	00	Data Format 00 = I2S format 01 = DSP (PCM format) 10 = Right justified format (RJF) 11 = Left justified format (LJF)
1-0	WORDLENGTH	R/W	00	Word Length 00 = 16 bits 01 = 20 bits 10 = 24 bits 11 = 32 bits

7.5.8 Register 0x06: Serial Interface Control Register 2

This register sets the clock cycle offset between the WCLK edge to the MSB of serial interface patterns. This is useful for TDM mode where multiple devices share DIN or DOUT lines.

BIT	NAME	READ / WRITE	DEFAULT	DESCRIPTION
7-0	I2S_SHIFT_REG	R/W	0000 0000	Offset from WCLK to MSB in serial interface patterns. 0000 0000 = 0 bit offset 0000 0001 = 1 bit offset …. 1111 1111 = 255 bit offset

Copyright © 2013–2014, Texas Instruments Incorporated

7.5.9 Register 0x07: Output Data Register

This register sets the output data for DOUT. Most systems will simply set L_DATA_OUT to transmit output current data and R_DATA_OUT to transmit voltage data. Other data is available, like VBAT voltage, VBOOST voltage, and PGA gain.

Bit 5 is a dual-purpose bit. If I2S_OUT_SEL = 0 (Register 0x03, Bit 6) and the PDM_DATA_SEL bits are set to transmit only I-Data or V-Data, then Bit 5 dictates if that data is transmitted on the clock rising edge or falling edge. This allows two TAS2553 devices in PDM mode to tie their DOUT lines together and connect to the host digital mic input. In this configuration, each device broadcasts its output current or output voltage information – one on the rising edge of the clock, the other on the falling edge. This is a simple interface technique that does not require programming the host for TDM-interface mode.

BIT	NAME	READ / WRITE	DEFAULT	DESCRIPTION
7-6	PDM_DATA_SEL	R/W	11	PDM Data Select These bits are operative only if I2S_OUT_SEL = 0 for PDM mode (see Register 0x03, Bit 6). 00 - I Data Only - Select Ch1 or Ch2 with bit[5] 01 - V Data Only - Select Ch1 or Ch2 with bit[5] 10 - I/V Data (Ch1/2) 11 - V/I Data (Ch1/2)
5-3	R_DATA_OUT	R/W	000	Serial Interface Data, Right Channel Bit 5 is a dual-purpose bit, depending on the state of I2S_OUT_SEL (Register 0x03, Bit 6). If I2S_OUT_SEL = 0 and PDM_DATA_SEL = 00 or 01 (for single-channel PDM output mode), then Bit 5 will select whether data is transmitted on the rising or falling edge of the clock. 0xx = Falling Edge (Ch 1) 1xx = Rising Edge (Ch 2) If I2S_OUT_SEL = 1, then Bits 5-3 have the same function as L_DATA_OUT. Read the description in L_DATA_OUT for requirements on BCLK and WORD_LENGTH. 000 = I Data (16'b) 001 = V Data (16'b) 010 = VBAT Data (8'b) 011 = VBOOST Data (8'b) 100 = PGA Gain (5'b) 101 = I Data, V Data (32'b) 110 = VBAT, VBOOST, PGA Gain (21'b) 111 = Disabled (Hi-Z) NOTE: For VBAT and VBOOST, the device must be in a mode that uses this information, such as Battery Tracking AGC.
2-0	L_DATA_OUT	R/W	000	Serial Interface Data, Left Channel Users must provide enough BCLK cycles per WCLK frame to shift all the data out. If there are additional BCLK cycles per WCLK frame beyond the WORD_LENGTH setting, the data line will be HI-Z if SDOUT_TRISTATE (Register 0x04, Bit 3) is set to 1; otherwise the data line will be held low for the extra BCLK cycles. Users must also program a sufficient WORD_LENGTH setting. If selected data contains fewer bits than WORD_LENGTH setting, the extra bits will be 0's. 000 = I Data (16'b) 001 = V Data (16'b) 010 = VBAT Data (8'b) 011 = VBOOST Data (8'b) 100 = PGA Gain (5'b) 101 = I Data, V Data (32'b) 110 = VBAT, VBOOST, PGA Gain (21'b) 111 = Disabled (Hi-Z) NOTE: For VBAT and VBOOST, the device must be in a mode that uses this information, such as Battery Tracking AGC.

Copyright © 2013–2014, Texas Instruments Incorporated

7.5.10 Register 0x08: PLL Control Register 1

The equation for the PLL frequency is:

$$PLL_CLK = \frac{0.5 \times PLL_CLKIN \times J.D}{2^P} \quad (2)$$

J = 4, 5, 6, … 96
D = 0, 1, 2, ... 9999
P = 0,1

Registers 0x08 – 0x0A will only update when the PLL is disabled. To update the J, D, and P coefficients, set PLL_EN = 0 (Register 0x02, Bit 3) to disable the PLL, update Registers 0x08 – 0x0A, then set PLL_EN = 1 to activate the PLL.

BIT	NAME	READ / WRITE	DEFAULT	DESCRIPTION
7	PLL_PRESCALE_SEL	R/W	0	PLL P Pre-Scale Select 1: P = 1 0: P = 0
6-0	PLL_J	R/W	001 0000	PLL J Characteristic Multiplier Value 000 0000 … 000 0011: Do not use 000 0100: J=4 … 001 0000: J=16 … 101 1111: J=95 110 0000: J=96 110 0001 ... 111 1111: Do not use

7.5.11 Register 0x09: PLL Control Register 2

BIT	NAME	READ / WRITE	DEFAULT	DESCRIPTION
7	PLL_BYPASS	R/W	0	1: Bypasses PLL by setting PLL_CLK = PLL_CLKIN 0: Sets PLL_CLK according to Equation 2
6			0	Reserved
5-0	PLL_D[13:8]	R/W	00 0000	PLL D Mantissa Multiplier Value (LSB) The complete PLL D value comprises PLL_D[13:8] (MSB) concatenated with PLLD[7:0] (LSB) 00 0000 0000 0000: D=0000 00 0000 0000 0001: D=0001 … 10 0111 0000 1110: D=9998 10 0111 0000 1111: D=9999 10 0111 0001 0000 ... 11 1111 1111 1111: Do not use

7.5.12 Register 0x0A: PLL Control Register 3

BIT	NAME	READ / WRITE	DEFAULT	DESCRIPTION
7-0	PLL_D[7:0]	R/W	0000 0000	PLL D Mantissa Multiplier Value (LSB) The complete PLL D value comprises PLL_D[13:8] (MSB) concatenated with PLLD[7:0] (LSB) 00 0000 0000 0000: D=0000 00 0000 0000 0001: D=0001 … 10 0111 0000 1110: D=9998 10 0111 0000 1111: D=9999 10 0111 0001 0000 ... 11 1111 1111 1111: Do not use

Copyright © 2013–2014, Texas Instruments Incorporated

7.5.13 Register 0x0B: Battery Tracking Inflection Point Register

BIT	NAME	READ / WRITE	DEFAULT	DESCRIPTION
7-0	INFLECTION	R/W	1000 1111	Battery Inflection Point Value 0.01733 V per step 0000 0000 = RESERVED … 0110 1100 = RESERVED 0110 1101 = 3.00 V … 1111 1101 = 5.49 V 1111 1110 = 5.50 V 1111 1111 = RESERVED

7.5.14 Register 0x0C: Battery Tracking Slope Control Register

BIT	NAME	READ / WRITE	DEFAULT	DESCRIPTION
7-0	SLOPE	R/W	1000 0000	Battery Tracking Slope Value (ΔVLIM / ΔVBAT) 0.0373 V/V per step 0000 0000 = 1.2 V/V 0000 0001 = 1.237 V/V … 1111 1101 = 10.675 V/V 1111 1110 = 10.713 V/V 1111 1111 = 10.75 V/V

7.5.15 Register 0x0D: Reserved Register

BIT	NAME	READ / WRITE	DEFAULT	DESCRIPTION
7-0		R/W	1011 1110	Write to 0xA9 during initialization. See Initialization.

7.5.16 Register 0x0E: Battery Tracking Limiter Attack Rate and Hysteresis Time

BIT	NAME	READ / WRITE	DEFAULT	DESCRIPTION
7-6	HYSTERESIS	R/W	00	Hysteresis before re-arming release time 00 = No hysteresis 01 = 4.36 mV hysteresis 10 = 13.08 mV hysteresis 11 = 30.52 mV hysteresis
5		R/W	0	Write to 1 during initialization. See Initialization.
4-3	APT_DIS_VOLTAGE	R/W	01	VBAT threshold below which Boost APT is disabled and the boost remains active regardless of Class-D output voltage. 00 = 2.5 V 01 = 2.7 V 10 = 2.9 V 11 = 3.1 V
2-0	ATTACK_TIME	R/W	000	Attack Time 350 µs / dB per step 000 = 20 µs / dB 001 = 370 µs / dB … 110 = 2120 µs / dB 111 = 2470 µs / dB

7.5.17 Register 0x0F: Battery Tracking Limiter Release Rate

BIT	NAME	READ / WRITE	DEFAULT	DESCRIPTION
7-4		R/W	00	Reserved. Write only default values.
3-0	REL_TIME	R/W	0100	Release Time 105 ms / dB per step 0000 = 50 ms / dB 0001 = 155 ms / dB … 1110 = 1520 ms / dB 1111 = 1625 ms / dB

7.5.18 Register 0x10: Battery Tracking Limiter Integration Count Control

Limiter integration affects how the AGC state machine interprets the AGC output voltage trigger threshold. Increasing the integration count requires more AGC output peaks to exceed the limiter threshold before the limiter changes its gain.

BIT	NAME	READ / WRITE	DEFAULT	DESCRIPTION
7-6	UP_DWN_RATIO	R/W	00	Control Integration Count Up/Down Ratio The UP_DWN_RATIO sets the ratio of the addition to and the subtraction from the integration count, meaning that the input has to be below the limit threshold for $4^{UP_DWN_RATIO}$ counts before the integration count is reduced.
5-0	INT_CNT	R/W	00 0000	Integration Count Control Register Larger values increase filtering before the attack and decay time are triggered.

Copyright © 2013–2014, Texas Instruments Incorporated

7.5.19 Register 0x11: PDM Configuration Register

Sets the PDM clock source and whether channel 1 data is transmitted on the rising or falling edge of the clock. Channel 2 transmits on the opposite edge.

BIT	NAME	READ / WRITE	DEFAULT	DESCRIPTION
7-3		R/W	0 0000	Reserved. Write only default values.
2	PDM_DATA_ES	R/W	0	PDM Data Edge Select 0 = falling edge 1 = rising edge
1-0	PDM_CLK_SEL	R/W	01	PDM Clock Select 00 = PLL / 8 01 = IVCLKIN 10 = BCLK 11 = MCLK

7.5.20 Register 0x12: PGA Gain Register

BIT	NAME	READ / WRITE	DEFAULT	DESCRIPTION
7-5		R/W	000	Reserved. Write only default values.
4-0	PGA_GAIN	R/W	0 0000	PGA Gain Value 00000 = -7 dB 00001 = -6 dB … 11110 = +23 dB 11111 = +24 dB

7.5.21 Register 0x13: Class-D Edge Rate Control Register

BIT	NAME	READ / WRITE	DEFAULT	DESCRIPTION
7	GAINCOMP_EN	R/W	0	I-V Sense Gain Compensation Control Enables AGC compensation for current sense feedback. AGC compensation increases the gain of the current sense data by the same gain the AGC instantaneously attenuates. 0 = No I-V sense gain compensation 1 = Gain compensation enabled
6-4	ERC_SEL	R/W	100	Class-D Output Edge Rate Control 000 = 50 ns 001 = 40 ns 010 = 29 ns 011 = 25 ns 100 = 14 ns (default) 101 = 13 ns 110 = 12 ns 111 = 11 ns
3-0		R/W	0000	Reserved. Write only default values.

Copyright © 2013–2014, Texas Instruments Incorporated

7.5.22 Register 0x14: Boost Auto-Pass Through Control Register

Auto-Pass Through deactivates the boost converter when the battery voltage is sufficient for the required Class-D output voltage. This register sets the threshold for activating the boost converter and the delay time between the Class-D output voltage dropping below the threshold before the boost converter deactivates.

BIT	NAME	READ / WRITE	DEFAULT	DESCRIPTION
7-4		R/W	0000	Reserved. Write only default values.
3-2	APT_THRESHOLD	R/W	00	Analog Input – Auto-Pass Through Threshold The boost converter activates when the Class-D output voltage exceeds this threshold voltage. 00 = 0.5 V 01 = 1.0 V 10 = 1.4 V 11 = 2.0 V Digital Input – Auto-Pass Through Threshold The boost converter activates when the Class-D output voltage exceeds this threshold voltage. 00 = 0.2 V 01 = 0.7 V 10 = 1.1 V 11 = 1.7 V
1-0	APT_DELAY_SEL	R/W	00	Auto-Pass Thru Delay The delay between the Class-D output voltage dropping below the auto-pass thru threshold voltage and the boost converter deactivating. 00 = 50 ms 01 = 75 ms 10 = 125 ms 11 = 200 ms

7.5.23 Register 0x15: Reserved Register

BIT	NAME	READ / WRITE	DEFAULT	DESCRIPTION
7-0		R	0000 0000	Reserved

7.5.24 Register 0x16: Version Number

BIT	NAME	READ / WRITE	DEFAULT	DESCRIPTION
7-4		R	0000	Reserved
3-0	SILICON_VER	R	1000	Silicon version identifier bits

7.5.25 Register 0x17: Reserved Register

BIT	NAME	READ / WRITE	DEFAULT	DESCRIPTION
7-0		R	0000 0000	Reserved

7.5.26 Register 0x18: Reserved Register

BIT	NAME	READ / WRITE	DEFAULT	DESCRIPTION
7-0		R	0000 0000	Reserved

Copyright © 2013–2014, Texas Instruments Incorporated

7.5.27 Register 0x19: VBAT Data Register

BIT	NAME	READ / WRITE	DEFAULT	DESCRIPTION
7-0	VBAT	R	0000 0000	Battery Voltage Data VBAT data is only available when the device is in a mode that uses the VBAT measurement, such as Battery Tracking AGC. 1 LSB ≈ 17.33 mV 0000 0000 = RESERVED ... 0100 1001 = RESERVED 0101 0000 = 2.5 V … 1111 1111 = 5.55 V

Copyright © 2013–2014, Texas Instruments Incorporated

8 Applications and Implementation

8.1 Application Information

The TAS2553 is a digital or analog input high efficiency Class-D audio power amplifier with advanced battery current management and an integrated Class-G boost converter. In auto passthrough mode, the Class-G boost converter generates the Class-D amplifier supply rail. During low Class-D output power, the boost improves efficiency by deactivating and connecting VBAT directly to the Class-D amplifier supply. When high power audio is required, the boost quickly activates to provide louder audio than a stand-alone amplifier connected directly to the battery. To enable load monitoring, the TAS2553 constantly measures the current and voltage across the load and provides a digital stream of this information back to a processor.

8.2 Typical Applications

8.2.1 Typical Application - Digital Audio Input

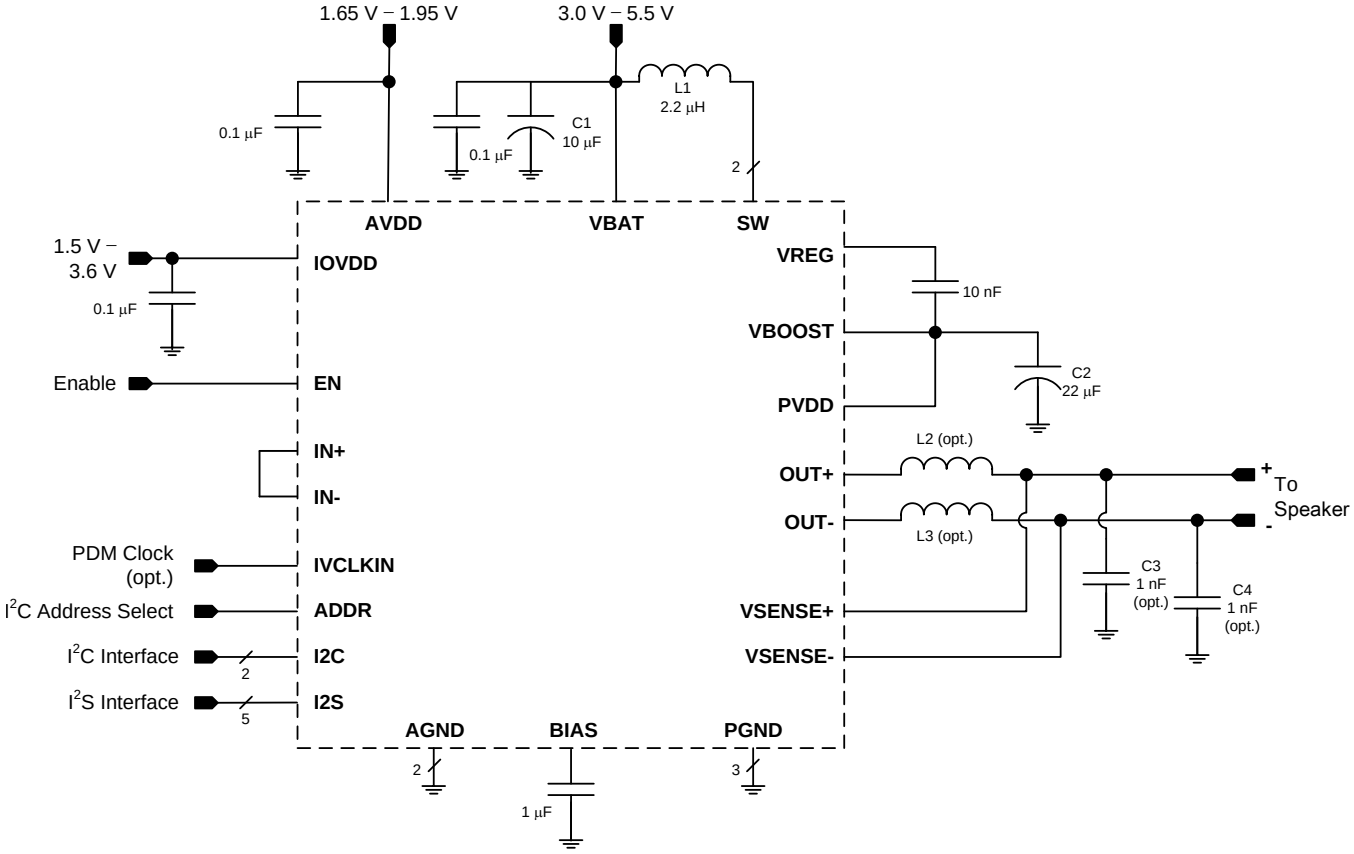

Figure 51. Typical Application Schematic

Table 11. Recommended External Components

COMPONENT	DESCRIPTION	SPECIFICATION	MIN	TYP	MAX	UNIT
L1	Boost Converter Inductor	Inductance, 20% Tolerance		2.2		µH
		Saturation Current		2.6		A
L2, L3	EMI Filter Inductors (optional)	Impedance at 100MHz		120		Ω
		DC Resistance			0.095	Ω
		DC Current			1.5	A
		Size		0402		EIA
C1	Boost Converter Input Capacitor	Capacitance, 20% Tolerance	10			µF

Copyright © 2013–2014, Texas Instruments Incorporated

Typical Applications (continued)

Table 11. Recommended External Components (continued)

COMPONENT	DESCRIPTION	SPECIFICATION	MIN	TYP	MAX	UNIT
C2	Boost Converter Output Capacitor	Type	X5R			
		Capacitance, 20% Tolerance	22		47	µF
		Rated Voltage	16			V
		Capacitance at 7.5 V derating	7			µF
C3, C4	EMI Filter Capacitors (optional, must use L2, L3 if C3, C4 used)	Capacitance		1		nF

8.2.1.1 Design Requirements

Table 12. Design Parameters

DESIGN PARAMETER	EXAMPLE VALUE
Audio Input	Digital Audio, I^2S
Current and Voltage Data Stream	Digital Audio, I^2S
Mono or Stereo Configuration	Mono
Max Output Power at 1% THD+N	2.8

8.2.1.2 Detailed Design Procedure

8.2.1.2.1 Audio Input/Output

The choice of digital or analog audio input is driven by system specific considerations. However, since a digital audio interface will typically be used to send current and voltage data from the TAS2553 to a system processor, using a bidirectional I^2S interface is likely to be the best choice.

If a digital audio input is used, the analog inputs, IN+ and IN-, should be shorted together, and not tied to ground.

8.2.1.2.2 Mono/Stereo Configuration

In this application, the device is assumed to be operating in mono mode. See General I^2C Operation for information on changing the I^2C address of the TAS2553 to support stereo operation. Mono or stereo configuration does not impact the device performance.

8.2.1.2.3 Boost Converter Passive Devices

The boost converter requires three passive devices that are labeled L1, C1 and C2 in Figure 51 and whose specifications are provided in Table 11. These specifications are based on the design of TAS2553 and are necessary to meet the performance targets of the device. In particular, L1 should not be allowed to enter in the current saturation region.

Specifically, the product of L1 and C2 (derated value at 8.5 V) has to be greater than 10e-12 for boost stability after accounting worst case variation of L1 and C2. To satisfy sufficient energy transfer, L1 needs to be > 2 µH at the boost switching frequency (~1.75 MHz). Minimum C2 (derated value at 8.5 V) should be > 4 µF for Class-D power delivery specification. The saturation current for L1 should be > ILIM to deliver Class-D peak power.

8.2.1.2.4 EMI Passive Devices

The TAS2553 supports edge-rate control to minimize EMI, but the system designer may want to include passive devices on the Class-D output devices. These passive devices that are labeled L2, L3, C3 and C4 in Figure 51 and their recommended specifications are provided in Table 11. If C3 and C4 are used, they must be placed after L2 and L3 respectively to maintain the stability of the output stage.

8.2.1.2.5 Miscellaneous Passive Devices

- VREG Capacitor: Needs to be 10 nF to meet boost and class-D power delivery and efficiency specs.
- BIAS Capacitor: Needs to be 1 µF to meet PSSR and noise performance.

Copyright © 2013–2014, Texas Instruments Incorporated

8.2.1.3 Application Performance Plots

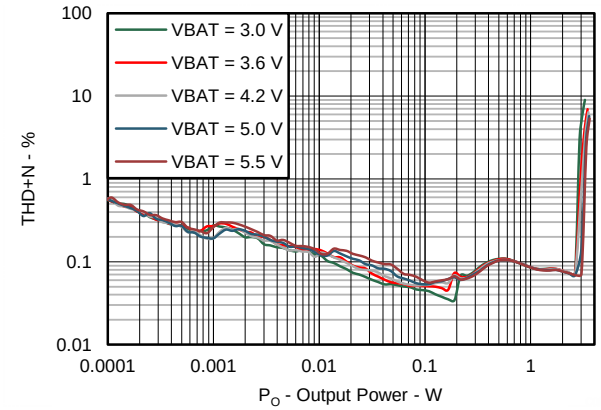

AGC=OFF, Gain = 15 dB

Figure 52. THD+N vs Output Power (8Ω) for Digital Input

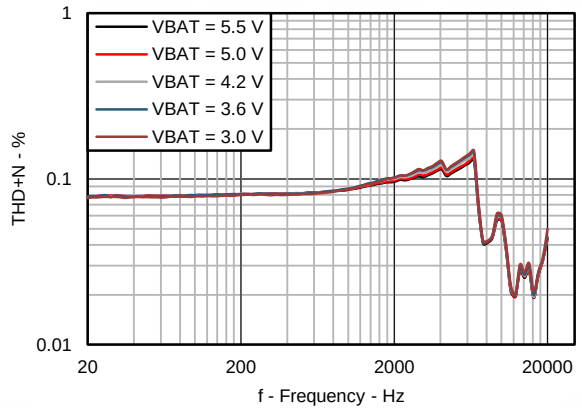

AGC=OFF, Gain = 15 dB, P_{out} = 1W

Figure 53. THD+N vs Frequency (8Ω) for Digital Input

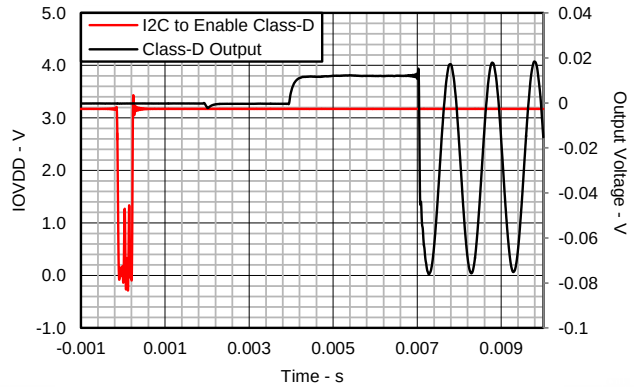

Figure 54. Startup Timing

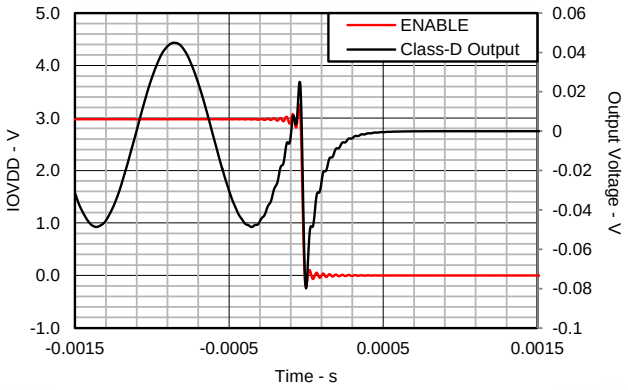

Class D output and EN pulled low

Figure 55. Shutdown Timing

Copyright © 2013–2014, Texas Instruments Incorporated

8.2.2 Typical Application - Analog Audio Input

Using the analog audio input is very similar to the digital audio input case in Typical Application - Digital Audio Input, and this section will only discuss the differences from the digital input configuration.

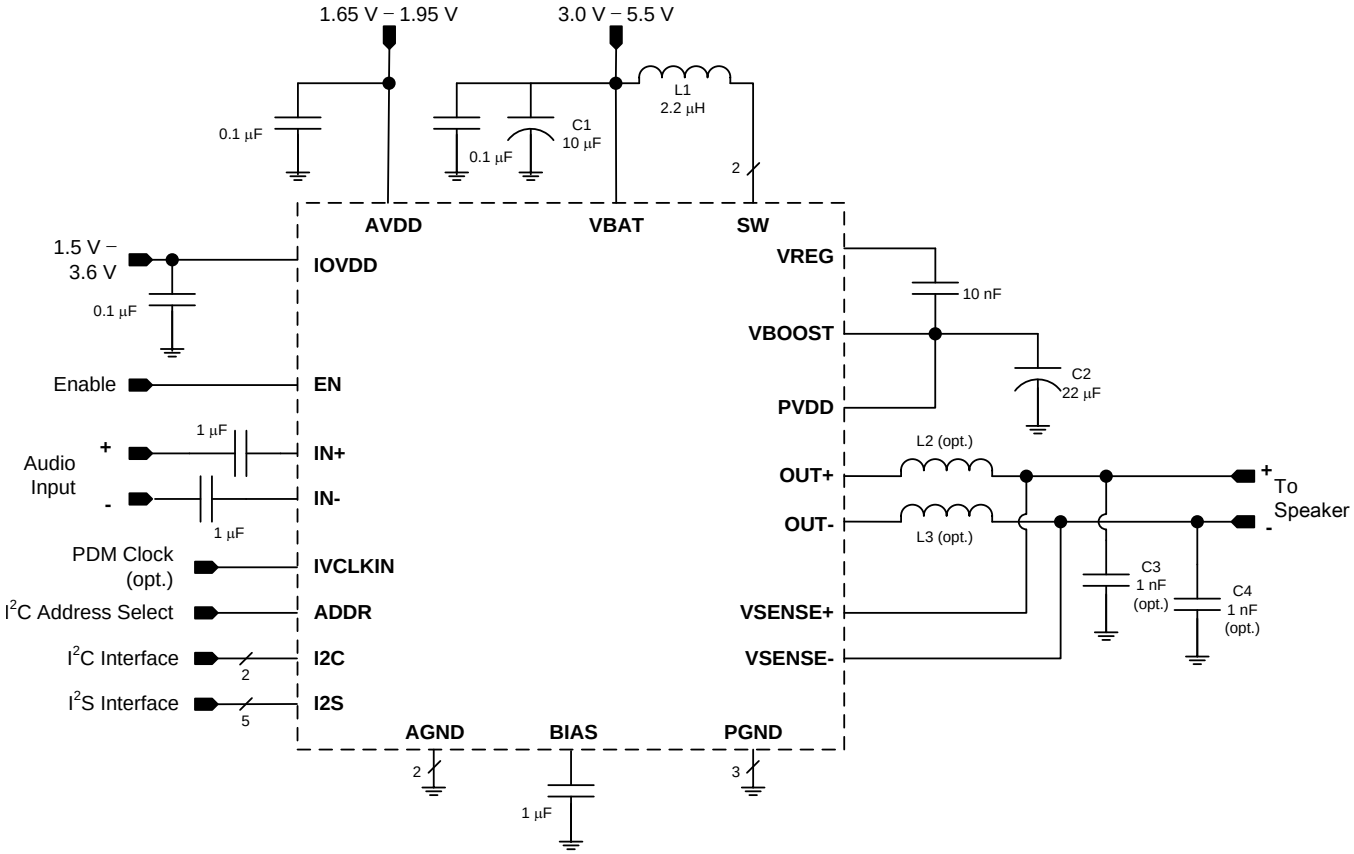

Figure 56. Typical Application Schematic

8.2.2.1 Design Requirements

Table 13. Design Parameters

DESIGN PARAMETER	EXAMPLE VALUE
Audio Input	Analog
Current and Voltage Data Stream	Digital Audio, I^2S
Mono or Stereo Configuration	Mono
Max Output Power at 1% THD+N	2.8

8.2.2.2 Detailed Design Procedure

8.2.2.2.1 Audio Input/Output

In this application, system considerations require the use of an analog audio input. Note that a digital audio interface, such as I^2S, still needs to be connected to send current and voltage data from the TAS2553 to a system processor.

The analog inputs to TAS2553 should be ac-coupled to the device terminals to allow decoupling of signal source's common mode voltage with that of TAS2553's common mode voltage. The input coupling capacitor in combination with the selected input impedance of TAS2553 forms a high-pass filter.

$$F_c = 1/(2*\pi*R_{in}C_c) \quad (3)$$

$$C_c = 1/(2*\pi*R_{in}F_c) \quad (4)$$

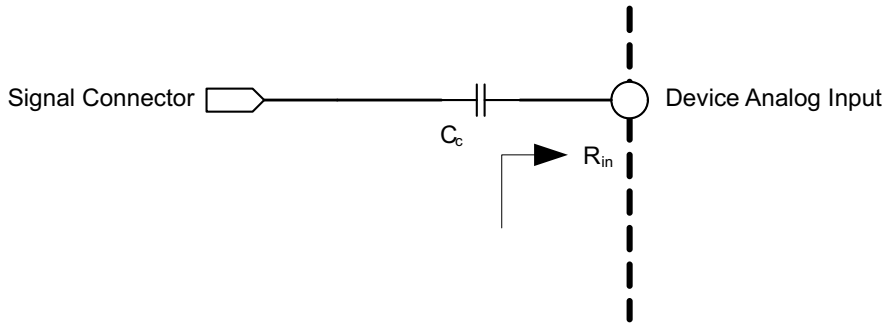

Figure 57. Analog Input Connection

For high fidelity audio playback, it is desirable to keep the cutoff frequency of the high pass filter below the minimum reproducible frequency of the speaker. For example, a 1 µF capacitor connected to the differential analog inputs with input resistance 10 kΩ results in a cutoff frequency of 16 Hz.

8.2.2.3 Application Performance Plots

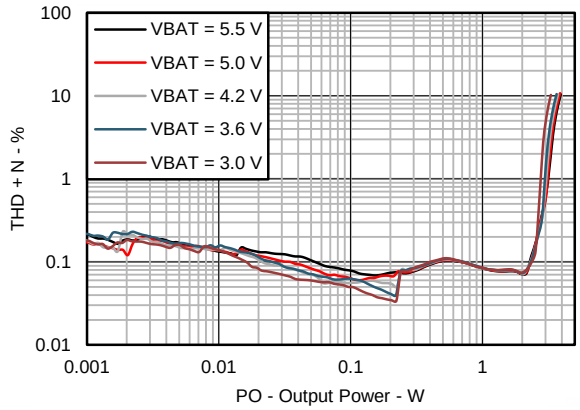

AGC=OFF, Gain = 15 dB, f = 1 kHz

Figure 58. THD+N vs Output Power (8Ω) for Analog Input

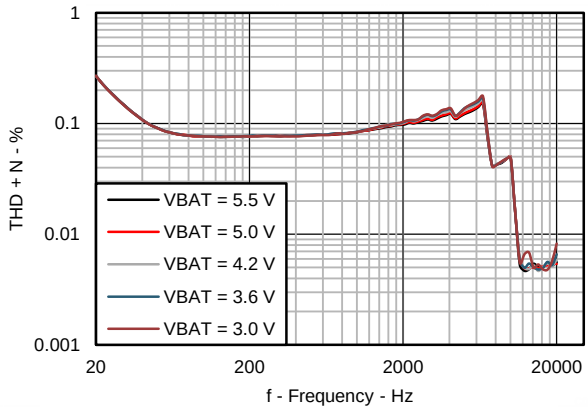

AGC=OFF, Gain = 15 dB

Figure 59. THD+N vs Frequency (8Ω) for Analog Input

8.3 Initialization

To configure the TAS2553, follow these steps.

1. Bring-up the power supplies as in Power Supply Sequencing.
2. Set the EN terminal to HIGH.
3. Configure the registers in the sequence below. Do not set the bits in the final two steps to zero anytime before the end of the sequence.
   - Configure device register
   - ...
   - ...
   - ...
   - Configure device register
   - Set Register 0x0D D[7:0] = 0xA9
   - Set Register 0x0E D[5] = 1
   - Set Register 0x02 D[0] = 0
   - Set Register 0x01 D[1] = 0

Copyright © 2013–2014, Texas Instruments Incorporated

9 Power Supply Recommendations

9.1 Power Supplies

The TAS2553 requires three power supplies:

- Boost Input (terminal: VBAT)
  - Voltage: 3.0 V to 5.5 V
  - Max Current: 2.6 A
- Analog Supply (terminal: AVDD)
  - Voltage: 1.65 V to 1.95 V
  - Max Current: 30 mA
- Digital I/O Supply (terminal: IOVDD)
  - Voltage: 1.5 V to 3.6 V
  - Max Current: 5 mA

The decoupling capacitors for the power supplies should be placed close to the device terminals. For VBAT, IOVDD and AVDD, a small decoupling capacitor of 0.1 µF should be placed close to the device terminals. Refer to Figure 56 for the schematic.

9.2 Power Supply Sequencing

The power supplies should be started in the following order:

1. VBAT,
2. IOVDD,
3. AVDD.

When the supplies have settled, the EN terminal can be set HIGH to operate the device. The above sequence should be completed before any I^2C operation.

9.3 Boost Supply Details

The boost supply (VBAT) and associated passives need to be able to support the current requirements of the device. The peak current limit of the boost is 2.5 A. A minimum of a 10 µF capacitor is recommended on the boost supply to quickly support changes in required current. Refer to Figure 56 for the schematic.

The current requirements can also be reduced by lowering the gain of the amplifier, or in response to decreasing battery through the use of the battery-tracking AGC feature of the TAS2553 described in Battery Tracking AGC.

Copyright © 2013–2014, Texas Instruments Incorporated

10 Layout

10.1 Layout Guidelines

- Place the boost inductor between VBAT and SW close to device terminals with no VIAS between the device terminals and the inductor.
- Place the capacitor between VREG and VBOOST close to device terminals with no VIAS between the device terminals and capacitor.
- Place the capacitor between VBOOST/PVDD and GND close to device terminals with no VIAS between the device terminals and capacitor.
- Do not use VIAS for traces that carry high current. These include the traces for VBOOST, SW, PVDD and the speaker OUT+, OUT-.
- Use epoxy filled vias for the interior pads.
- Connect VSENSE+, VSENSE- as close as possible to the speaker.
  - VSENSE+, VSENSE- should be connected between the EMI ferrite and the speaker if EMI ferrites are used on OUT+, OUT-.
  - VSENSE+, VSENSE- should be connected between the EMI ferrite and the EMI capacitor if EMI capacitors are used. EMI ferrites must be used if EMI capacitors are used on OUT+, OUT-.
- If the analog inputs, IN+ and IN-, are:
  - used, analog input traces should be routed symmetrically for true differential performance.
  - used, do not run analog input traces parallel to digital lines.
  - used, they should be ac coupled.
  - not used, they should be shorted together.
- Use a ground plane with multiple vias for each terminal to create a low-impedance connection to GND for minimum ground noise.
- Use supply decoupling capacitors as shown in Figure 51 and Figure 56 and described in Power Supply Recommendations.
- Place EMI ferrites, if used, close to the device.

Copyright © 2013–2014, Texas Instruments Incorporated

10.2 Layout Example

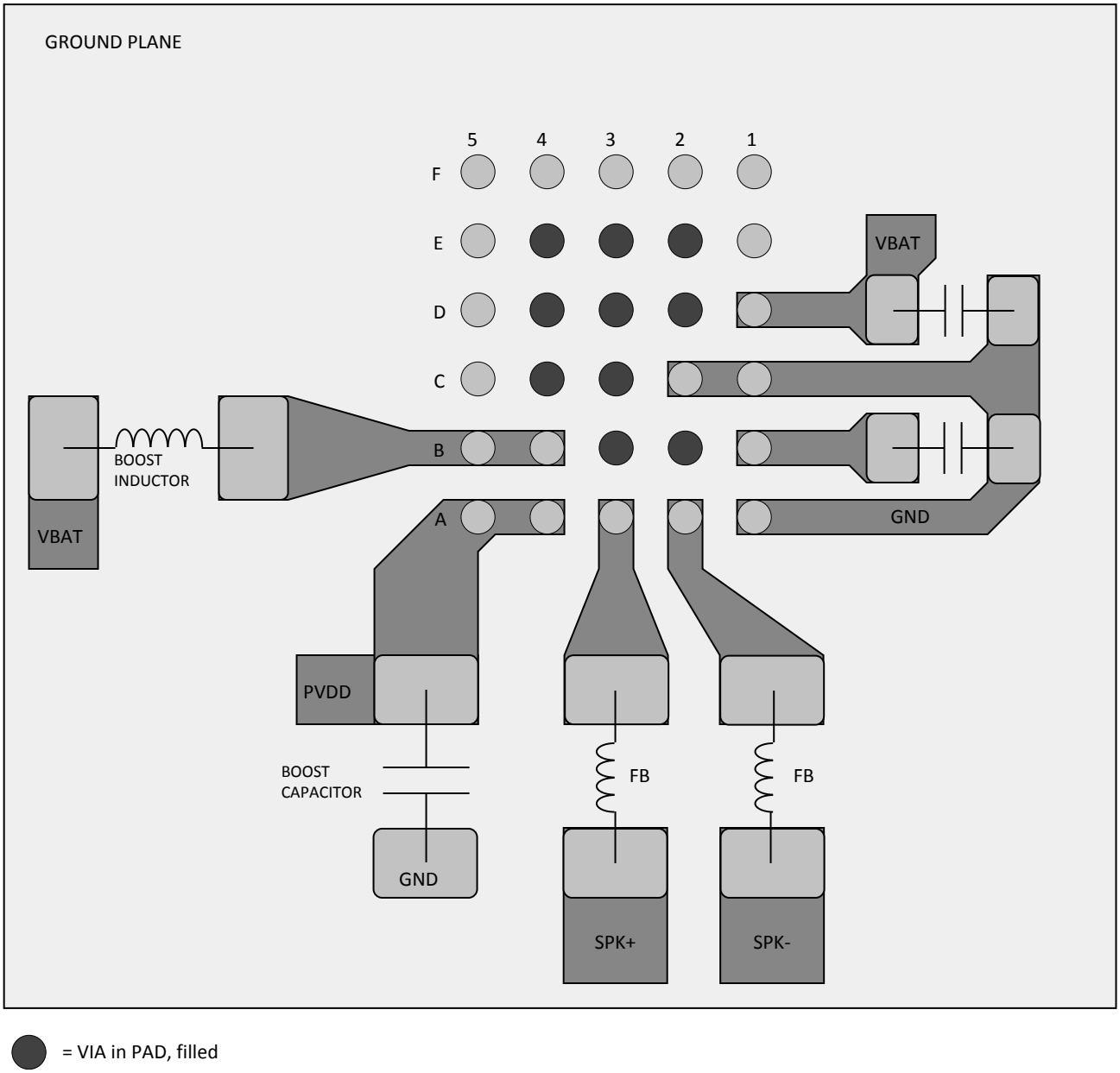

Figure 60. TAS2553 Board Layout

10.3 Package Dimensions

The TAS2553 uses a 30-ball, 0.4 mm pitch WCSP package. The die length (D) and width (E) correspond to the package mechanical drawing at the end of the datasheet.

DIMENSION	D	E
Max	2885 µm	2605 µm
Typ	2855 µm	2575 µm
Min	2825 µm	2545 µm

Copyright © 2013–2014, Texas Instruments Incorporated

11 器件和文档支持

11.1 Trademarks

All trademarks are the property of their respective owners.

11.2 Electrostatic Discharge Caution

These devices have limited built-in ESD protection. The leads should be shorted together or the device placed in conductive foam during storage or handling to prevent electrostatic damage to the MOS gates.

11.3 Glossary

SLYZ022 — *TI Glossary*.

This glossary lists and explains terms, acronyms and definitions.

12 机械封装和可订购信息

以下页中包括机械封装和可订购信息。 这些信息是针对指定器件可提供的最新数据。 这些数据会在无通知且不对本文档进行修订的情况下发生改变。 欲获得该数据表的浏览器版本，请查阅左侧的导航栏。

Copyright © 2013–2014, Texas Instruments Incorporated

PACKAGING INFORMATION

Orderable Device	Status (1)	Package Type	Package Drawing	Pins	Package Qty	Eco Plan (2)	Lead finish/ Ball material (6)	MSL Peak Temp (3)	Op Temp (°C)	Device Marking (4/5)	Samples
TAS2553YFFR	ACTIVE	DSBGA	YFF	30	3000	RoHS & Green	SNAGCU	Level-1-260C-UNLIM	-40 to 85	TAS2553	Samples
TAS2553YFFT	ACTIVE	DSBGA	YFF	30	250	RoHS & Green	SNAGCU	Level-1-260C-UNLIM	-40 to 85	TAS2553	Samples

(1) The marketing status values are defined as follows:
ACTIVE: Product device recommended for new designs.
LIFEBUY: TI has announced that the device will be discontinued, and a lifetime-buy period is in effect.
NRND: Not recommended for new designs. Device is in production to support existing customers, but TI does not recommend using this part in a new design.
PREVIEW: Device has been announced but is not in production. Samples may or may not be available.
OBSOLETE: TI has discontinued the production of the device.

(2) **RoHS:** TI defines "RoHS" to mean semiconductor products that are compliant with the current EU RoHS requirements for all 10 RoHS substances, including the requirement that RoHS substance do not exceed 0.1% by weight in homogeneous materials. Where designed to be soldered at high temperatures, "RoHS" products are suitable for use in specified lead-free processes. TI may reference these types of products as "Pb-Free".
RoHS Exempt: TI defines "RoHS Exempt" to mean products that contain lead but are compliant with EU RoHS pursuant to a specific EU RoHS exemption.
Green: TI defines "Green" to mean the content of Chlorine (Cl) and Bromine (Br) based flame retardants meet JS709B low halogen requirements of <=1000ppm threshold. Antimony trioxide based flame retardants must also meet the <=1000ppm threshold requirement.

(3) MSL, Peak Temp. - The Moisture Sensitivity Level rating according to the JEDEC industry standard classifications, and peak solder temperature.

(4) There may be additional marking, which relates to the logo, the lot trace code information, or the environmental category on the device.

(5) Multiple Device Markings will be inside parentheses. Only one Device Marking contained in parentheses and separated by a "~" will appear on a device. If a line is indented then it is a continuation of the previous line and the two combined represent the entire Device Marking for that device.

(6) Lead finish/Ball material - Orderable Devices may have multiple material finish options. Finish options are separated by a vertical ruled line. Lead finish/Ball material values may wrap to two lines if the finish value exceeds the maximum column width.

Important Information and Disclaimer: The information provided on this page represents TI's knowledge and belief as of the date that it is provided. TI bases its knowledge and belief on information provided by third parties, and makes no representation or warranty as to the accuracy of such information. Efforts are underway to better integrate information from third parties. TI has taken and continues to take reasonable steps to provide representative and accurate information but may not have conducted destructive testing or chemical analysis on incoming materials and chemicals. TI and TI suppliers consider certain information to be proprietary, and thus CAS numbers and other limited information may not be available for release.

In no event shall TI's liability arising out of such information exceed the total purchase price of the TI part(s) at issue in this document sold by TI to Customer on an annual basis.

TAPE AND REEL INFORMATION

REEL DIMENSIONS

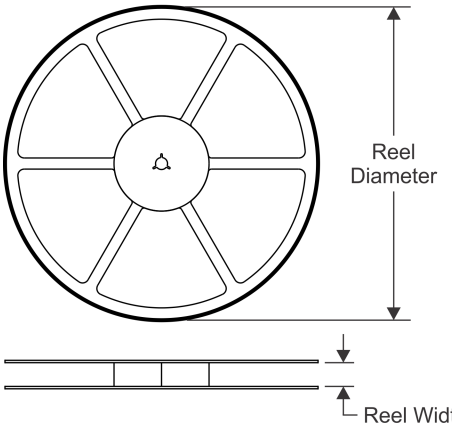

TAPE DIMENSIONS

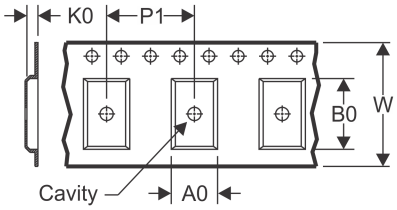

A0	Dimension designed to accommodate the component width
B0	Dimension designed to accommodate the component length
K0	Dimension designed to accommodate the component thickness
W	Overall width of the carrier tape
P1	Pitch between successive cavity centers

QUADRANT ASSIGNMENTS FOR PIN 1 ORIENTATION IN TAPE

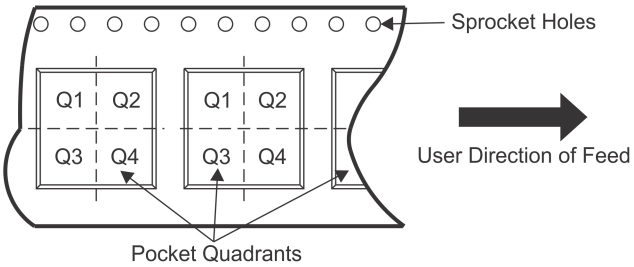

*All dimensions are nominal

Device	Package Type	Package Drawing	Pins	SPQ	Reel Diameter (mm)	Reel Width W1 (mm)	A0 (mm)	B0 (mm)	K0 (mm)	P1 (mm)	W (mm)	Pin1 Quadrant
TAS2553YFFR	DSBGA	YFF	30	3000	180.0	8.4	2.76	3.02	0.83	4.0	8.0	Q1
TAS2553YFFT	DSBGA	YFF	30	250	180.0	8.4	2.76	3.02	0.83	4.0	8.0	Q1

TAPE AND REEL BOX DIMENSIONS

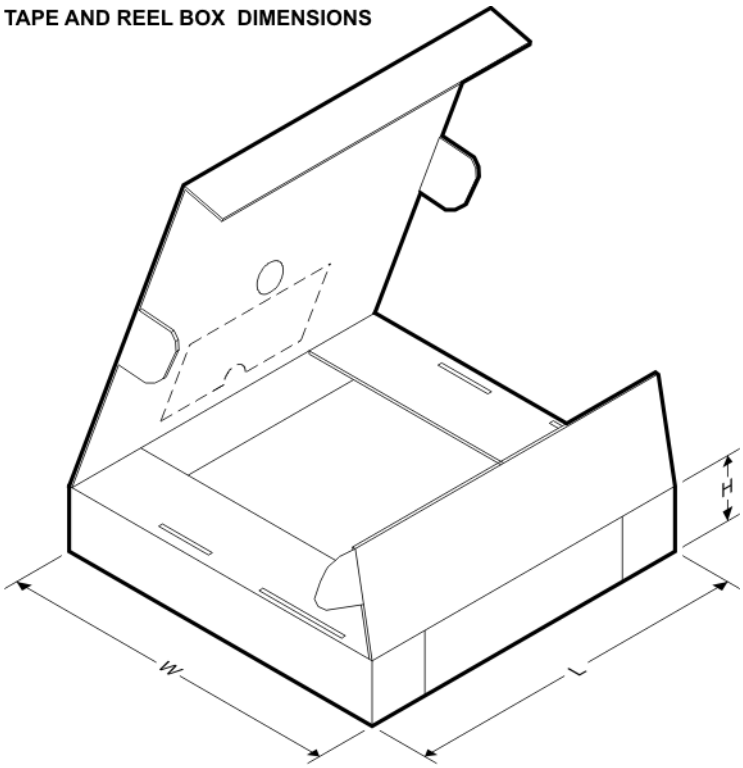

*All dimensions are nominal

Device	Package Type	Package Drawing	Pins	SPQ	Length (mm)	Width (mm)	Height (mm)
TAS2553YFFR	DSBGA	YFF	30	3000	182.0	182.0	20.0
TAS2553YFFT	DSBGA	YFF	30	250	182.0	182.0	20.0

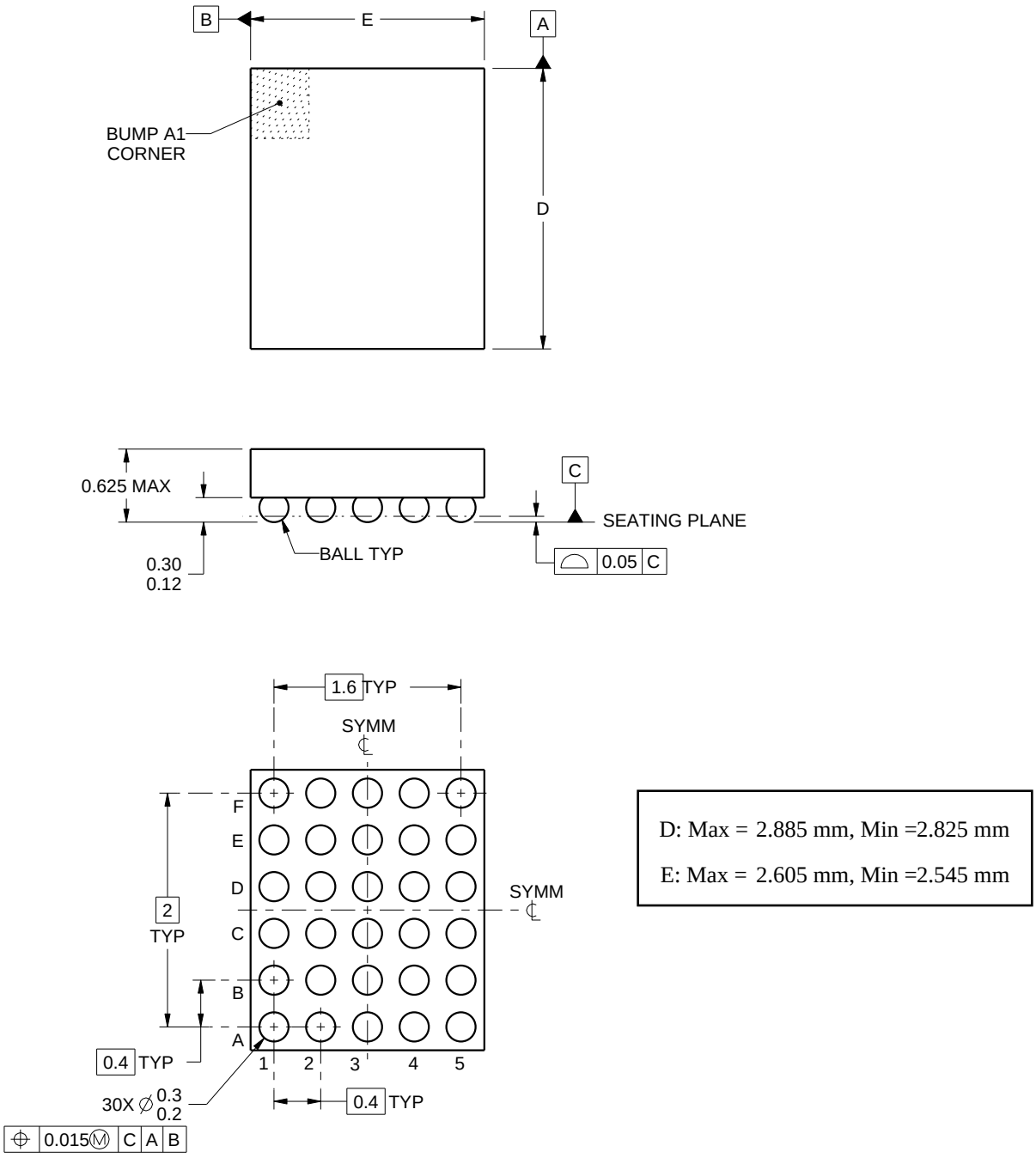

NOTES:

1. All linear dimensions are in millimeters. Any dimensions in parenthesis are for reference only. Dimensioning and tolerancing per ASME Y14.5M.
2. This drawing is subject to change without notice.

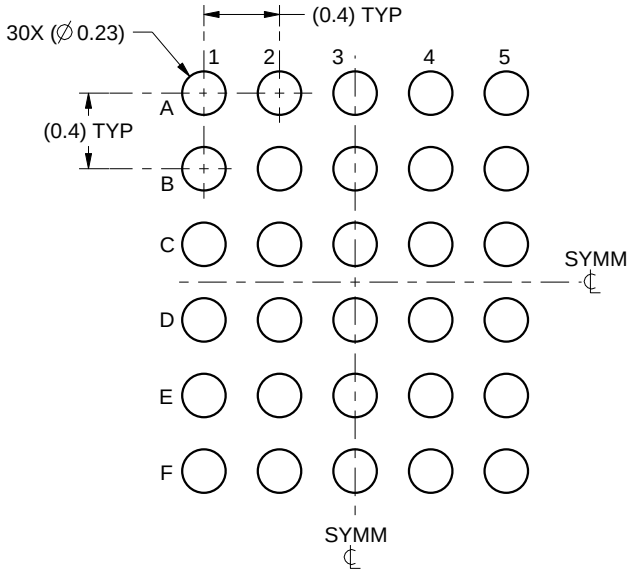

LAND PATTERN EXAMPLE
SCALE:25X

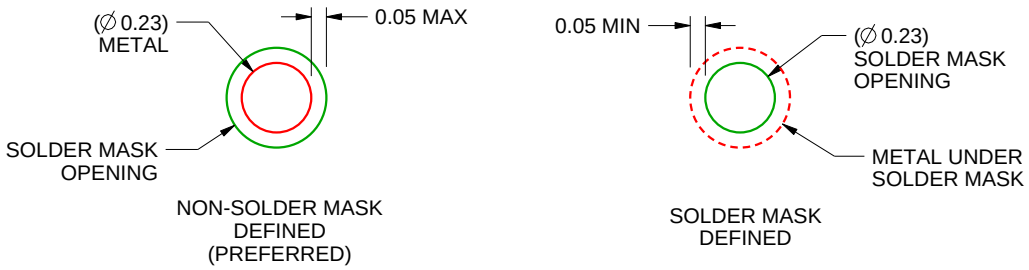

SOLDER MASK DETAILS
NOT TO SCALE

4219433/A 03/2016

NOTES: (continued)

3. Final dimensions may vary due to manufacturing tolerance considerations and also routing constraints.
   For more information, see Texas Instruments literature number SNVA009 (www.ti.com/lit/snva009).

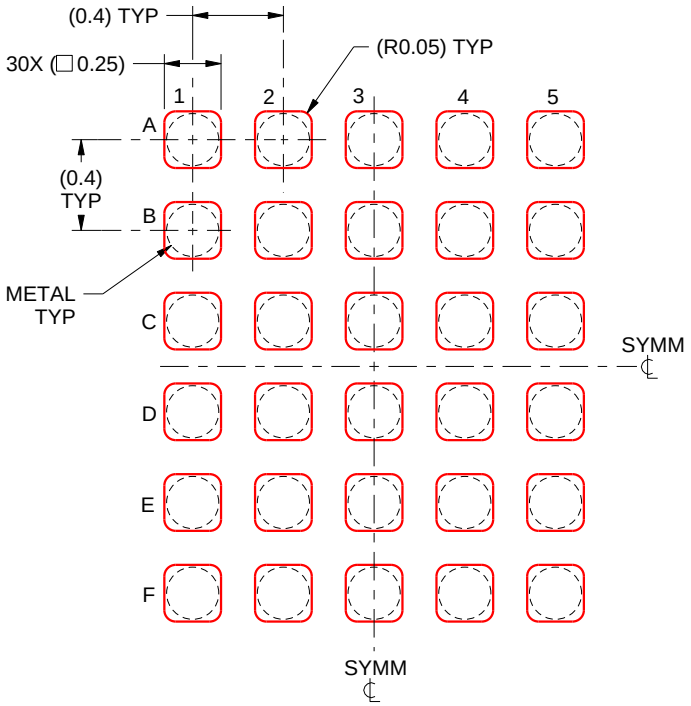

SOLDER PASTE EXAMPLE
BASED ON 0.1 mm THICK STENCIL
SCALE:30X

4219433/A 03/2016

NOTES: (continued)

4. Laser cutting apertures with trapezoidal walls and rounded corners may offer better paste release.

重要声明和免责声明

TI 提供技术和可靠性数据（包括数据表）、设计资源（包括参考设计）、应用或其他设计建议、网络工具、安全信息和其他资源，不保证没有瑕疵且不做出任何明示或暗示的担保，包括但不限于对适销性、某特定用途方面的适用性或不侵犯任何第三方知识产权的暗示担保。

这些资源可供使用 TI 产品进行设计的熟练开发人员使用。您将自行承担以下全部责任：(1) 针对您的应用选择合适的 TI 产品，(2) 设计、验证并测试您的应用，(3) 确保您的应用满足相应标准以及任何其他安全、安保或其他要求。这些资源如有变更，恕不另行通知。TI 授权您仅可将这些资源用于研发本资源所述的 TI 产品的应用。严禁对这些资源进行其他复制或展示。您无权使用任何其他 TI 知识产权或任何第三方知识产权。您应全额赔偿因在这些资源的使用中对 TI 及其代表造成的任何索赔、损害、成本、损失和债务，TI 对此概不负责。

TI 提供的产品受 TI 的销售条款 (https:www.ti.com.cn/zh-cn/legal/termsofsale.html) 或 ti.com.cn 上其他适用条款/TI 产品随附的其他适用条款的约束。TI 提供这些资源并不会扩展或以其他方式更改 TI 针对 TI 产品发布的适用的担保或担保免责声明。

邮寄地址：上海市浦东新区世纪大道 1568 号中建大厦 32 楼，邮政编码：200122
Copyright © 2021 德州仪器半导体技术（上海）有限公司