3-V TO 5.5-V MULTICHANNEL RS-232 LINE DRIVER/RECEIVER WITH ±15-kV ESD PROTECTION

FEATURES

- RS-232 Bus-Pin ESD Protection Exceeds ±15 kV Using Human-Body Model (HBM)
- Meets or Exceeds the Requirements of TIA/EIA-232-F and ITU v.28 Standards
- Operates With 3-V to 5.5-V V_{CC} Supply
- Operates Up To 250 kbit/s
- Two Drivers and Two Receivers
- Low Supply Current . . . 300 μA Typical
- External Capacitors . . . 4 × 0.1 μF
- Accepts 5-V Logic Input With 3.3-V Supply
- Alternative High-Speed Pin-Compatible Device (1 Mbit/s)
  - SNx5C3232

APPLICATIONS

- Battery-Powered Systems, PDAs, Notebooks, Laptops, Palmtop PCs, and Hand-Held Equipment

DB OR PW PACKAGE
(TOP VIEW)

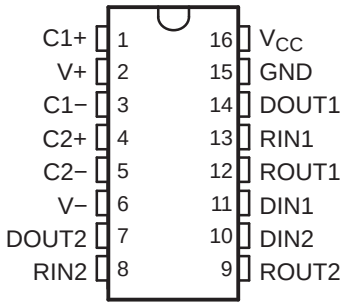

SUPPORTS DEFENSE, AEROSPACE, AND MEDICAL APPLICATIONS

- Controlled Baseline
- One Assembly/Test Site
- One Fabrication Site
- Available in Military (–55°C/125°C) Temperature Range(1)
- Extended Product Life Cycle
- Extended Product-Change Notification
- Product Traceability

(1) Additional temperature ranges are available - contact factory

ORDERING INFORMATION(1)

T_A	PACKAGE(2)		ORDERABLE PART NUMBER	TOP-SIDE MARKING
–55°C to 125°C	SSOP (DB)	Reel of 2000	MAX3232MDBREP	MB3232M
	TSSOP(PW)	Reel of 2000	MAX3232MPWREP	

(1) For the most current package and ordering information, see the Package Option Addendum at the end of this document, or see the TI website at www.ti.com.
(2) Package drawings, thermal data, and symbolization are available at www.ti.com/packaging.

DESCRIPTION

The MAX3232 device consists of two line drivers, two line receivers, and a dual charge-pump circuit with ±15-kV ESD protection pin to pin (serial-port connection pins, including GND). The device meets the requirements of TIA/EIA-232-F and provides the electrical interface between an asynchronous communication controller and the serial-port connector. The charge pump and four small external capacitors allow operation from a single 3-V to 5.5-V supply. The devices operate at data signaling rates up to 250 kbit/s and a maximum of 30-V/μs driver output slew rate.

Please be aware that an important notice concerning availability, standard warranty, and use in critical applications of Texas Instruments semiconductor products and disclaimers thereto appears at the end of this data sheet.

PRODUCTION DATA information is current as of publication date. Products conform to specifications per the terms of the Texas Instruments standard warranty. Production processing does not necessarily include testing of all parameters.

Copyright © 2006–2009, Texas Instruments Incorporated

FUNCTION TABLE

EACH DRIVER		EACH RECEIVER	
INPUT DIN	OUTPUT DOUT	INPUT RIN	OUTPUT ROUT
L	H	L	H
H	L	H	L
		Open	H
H = high level, L = low level, Open = input disconnected or connected driver off			

LOGIC DIAGRAM (POSITIVE LOGIC)

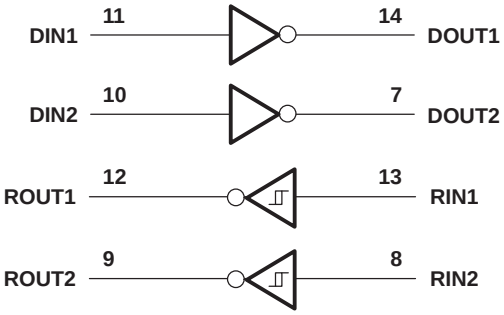

ABSOLUTE MAXIMUM RATINGS

over operating free-air temperature range (unless otherwise noted)

			VALUE	UNIT
V_{CC}	Supply voltage range(1)		–0.3 to 6	V
V+	Positive output supply voltage range(1)		–0.3 to 7	V
V–	Negative output supply voltage range(1)		0.3 to –7	V
V+ – V–	Supply voltage difference(1)		13	V
V_I	Input voltage range	Drivers	–0.3 to 6	V
		Receivers	–25 to 25	V
V_O	Output voltage range	Drivers	–13.2 to 13.2	V
		Receivers	–0.3 to V_{CC} + 0.3	V
θ_{JA}	Package thermal impedance(2)	DB package	82	°C/W
		PW package	108	°C/W
T_J	Operating virtual junction temperature		150	°C
T_{stg}	Storage temperature range		–65 to 150	°C

(1) All voltages are with respect to network GND.
(2) Maximum power dissipation is a function of $T_J(max)$, θ_{JA}, and T_A. The maximum allowable power dissipation at any allowable ambient temperature is $P_D = (T_J(max) – T_A)/\theta_{JA}$. Operating at the absolute maximum T_J of 150°C can affect reliability.

RECOMMENDED OPERATING CONDITIONS (see (1)and Figure 4)

				MIN	NOM	MAX	UNIT
	Supply voltage		V_{CC} = 3.3 V	3	3.3	3.6	V
			V_{CC} = 5 V	4.5	5	5.5	
V_{IH}	Driver high-level input voltage	DIN	V_{CC} = 3.3 V	2			V
			V_{CC} = 5 V	2.4			
V_{IL}	Driver low-level input voltage	DIN				0.8	V

(1) Test conditions are C1–C4 = 0.1 µF at V_{CC} = 3.3 V ±0.3 V; C1 = 0.047 µF, C2–C4 = 0.33 µF at V_{CC} = 5 V ±0.5 V.

Copyright © 2006–2009, Texas Instruments Incorporated

RECOMMENDED OPERATING CONDITIONS (see and Figure 4) (continued)

				MIN	NOM	MAX	UNIT
V_I	Driver input voltage	DIN		0		5.5	V
	Receiver input voltage			–25		25	
T_A	Operating free-air temperature	MAX3232M		-55		125	°C

ELECTRICAL CHARACTERISTICS

over recommended ranges of supply voltage and operating free-air temperature (unless otherwise noted) (see (1) and Figure 4)

PARAMETER		TEST CONDITIONS	MIN	TYP(2)	MAX	UNIT
I_{CC}	Supply current	No load, V_{CC} = 3.3 V or 5 V		0.3	2	mA

(1) Test conditions are C1–C4 = 0.1 µF at V_{CC} = 3.3 V ±0.3 V; C1 = 0.047 µF, C2–C4 = 0.33 µF at V_{CC} = 5 V ±0.5 V.
(2) All typical values are at V_{CC} = 3.3 V or V_{CC} = 5 V, and T_A = 25°C.

Copyright © 2006–2009, Texas Instruments Incorporated

DRIVER SECTION

ELECTRICAL CHARACTERISTICS

over recommended ranges of supply voltage and operating free-air temperature (unless otherwise noted) (see (1)and Figure 4)

PARAMETER		TEST CONDITIONS		MIN	TYP(2)	MAX	UNIT
V_{OH}	High-level output voltage	DOUT at R_L = 3 kΩ to GND,	DIN = GND	5	5.4		V
V_{OL}	Low-level output voltage	DOUT at R_L = 3 kΩ to GND,	DIN = V_{CC}	–5	–5.4		V
I_{IH}	High-level input current	V_I = V_{CC}			±0.01	±1	µA
I_{IL}	Low-level input current	V_I at GND			±0.01	±1	µA
I_{OS}(3)	Short-circuit output current	V_{CC} = 3.6 V,	V_O = 0 V		±35	±60	mA
		V_{CC} = 5.5 V,	V_O = 0 V				
r_o	Output resistance	V_{CC}, V+, and V– = 0 V,	V_O = ±2 V	300	10M		Ω

(1) Test conditions are C1–C4 = 0.1 µF at V_{CC} = 3.3 V ±0.3 V; C1 = 0.047 µF, C2–C4 = 0.33 µF at V_{CC} = 5 V ±0.5 V.
(2) All typical values are at V_{CC} = 3.3 V or V_{CC} = 5 V, and T_A = 25°C.
(3) Short-circuit durations should be controlled to prevent exceeding the device absolute power dissipation ratings, and not more than one output should be shorted at a time.

SWITCHING CHARACTERISTICS

over recommended ranges of supply voltage and operating free-air temperature (unless otherwise noted) (see (1)and Figure 4)

PARAMETER		TEST CONDITIONS		MIN	TYP(2)	MAX	UNIT
	Maximum data rate	C_L = 1000 pF, One DOUT switching,	R_L = 3 kΩ, See Figure 1	150	250		kbit/s
$t_{sk(p)}$	Pulse skew(1)	CL = 150 pF to 2500 pF	R_L = 3 kΩ to 7 kΩ, See Figure 2		300		ns
SR(tr)	Slew rate, transition region (see Figure 1)	RL = 3 kΩ to 7 kΩ, V_{CC} = 3.3 V	C_L = 150 pF to 1000 pF	6		30	V/µs
			C_L = 150 pF to 2500 pF	4		30	

(1) Short-circuit durations should be controlled to prevent exceeding the device absolute power dissipation ratings, and not more than one output should be shorted at a time.
(2) All typical values are at V_{CC} = 3.3 V or V_{CC} = 5 V, and T_A = 25°C.

Copyright © 2006–2009, Texas Instruments Incorporated

RECEIVER SECTION

ELECTRICAL CHARACTERISTICS

over recommended ranges of supply voltage and operating free-air temperature (unless otherwise noted (see [(1)] and Figure 4)

PARAMETER		TEST CONDITIONS	MIN	TYP[(2)]	MAX	UNIT
V_{OH}	High-level output voltage	I_{OH} = -1 mA	V_{CC}–0.6	V_{CC}–0.1		V
V_{OL}	Low-level output voltage	I_{OL} = 1.6 mA			0.4	V
V_{IT+}	Positive-going input threshold voltage	V_{CC} = 3.3 V		1.5	2.4	V
		V_{CC} = 5 V		1.8	2.4	
V_{IT-}	Negative-going input threshold voltage	V_{CC} = 3.3 V	0.6	1.2		V
		V_{CC} = 5 V	0.8	1.5		
V_{hys}	Input hysteresis (V_{IT+} – V_{IT-})			0.3		V
r_i	Input resistance	V_I = ±3 V to ±25 V	3	5	8	kΩ

(1) Test conditions are C1–C4 = 0.1 µF at V_{CC} = 3.3 V ±0.3 V; C1 = 0.047 µF, C2–C4 = 0.33 µF at V_{CC} = 5 V ±0.5 V.
(2) All typical values are at V_{CC} = 3.3 V or V_{CC} = 5 V and T_A = 25°C.

SWITCHING CHARACTERISTICS

over recommended ranges of supply voltage and operating free-air temperature (unless otherwise noted (see [(1)] and Figure 3)

PARAMETER		TEST CONDITIONS	MIN	TYP[(2)]	MAX	UNIT
t_{PLH}	Propagation delay time, low- to high-level output	C_L = 150 pF		300		ns
t_{PHL}	Propagation delay time, high- to low-level output			300		ns
$t_{sk(p)}$	Pulse skew[(3)]			300		ns

(1) Test conditions are C1–C4 = 0.1 µF at V_{CC} = 3.3 V ±0.3 V; C1 = 0.047 µF, C2–C4 = 0.33 µF at V_{CC} = 5 V ±0.5 V.
(2) All typical values are at V_{CC} = 3.3 V or V_{CC} = 5 V and T_A = 25°C.
(3) Pulse skew is defined as $|t_{PLH} - t_{PHL}|$ of each channel of the same device.

PARMETER MEASUREMENT INFORMATION

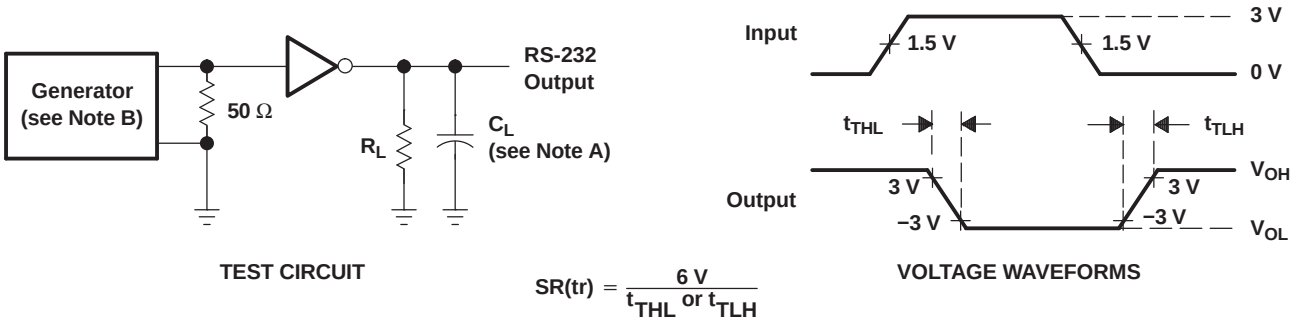

Figure 1. Driver Slew Rate

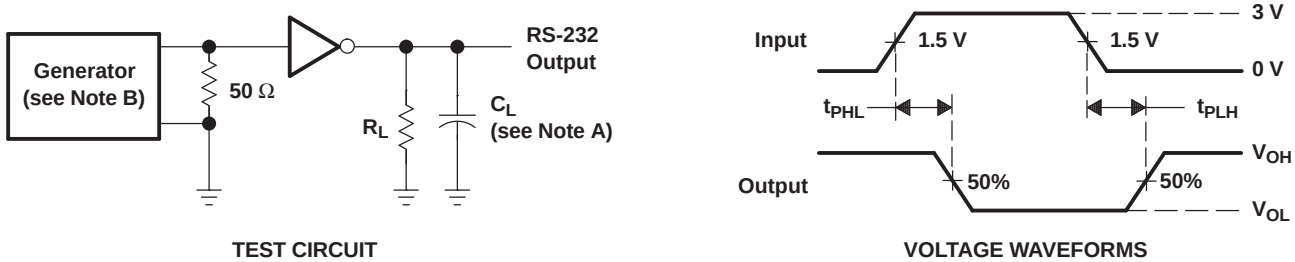

A. C_L includes probe and jig capacitance.
B. The pulse generator has the following characteristics: Z_O = 50 Ω, 50% duty cycle, tr ≤ 10 ns, tf ≤ 10 ns.

Figure 2. Driver Pulse Skew

PARMETER MEASUREMENT INFORMATION (continued)

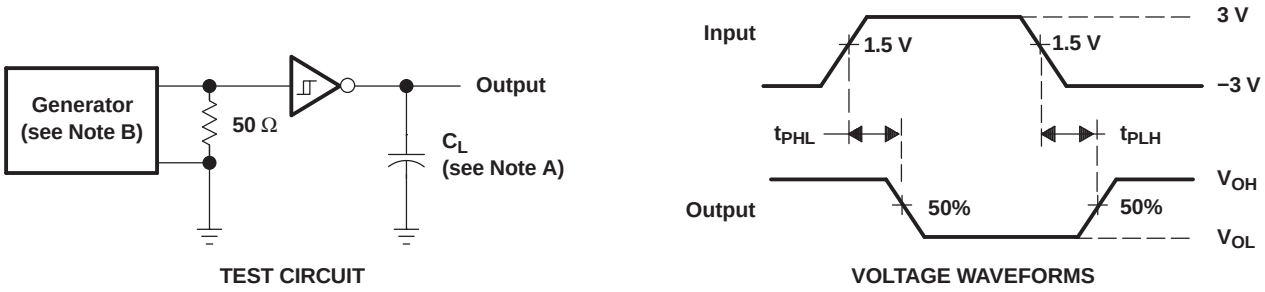

A. C_L includes probe and jig capacitance.

B. The pulse generator has the following characteristics: Z_O = 50 Ω, 50% duty cycle, tr ≤ 10 ns, tf ≤ 10 ns.

Figure 3. Receiver Propagation Delay Times

Copyright © 2006–2009, Texas Instruments Incorporated

APPLICATION INFORMATION

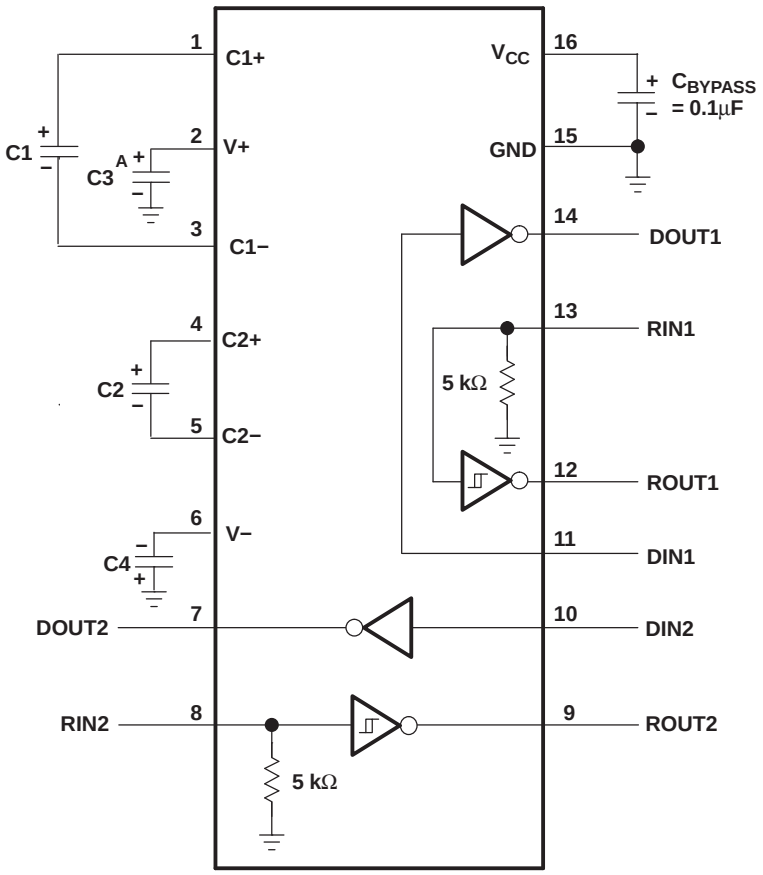

V_{CC} vs CAPACITOR VALUES

V_{CC}	C1	C2, C3, C4
3.3 V ± 0.3 V	0.1 μF	0.1 μF
5 V ± 0.5 V	0.047 μF	0.33 μF
3 V to 5.5 V	0.1 μF	0.47 μF

A. C3 can be connected to V_{CC} or GND.

B. Resistor values shown are nominal.

C. Nonpolarized ceramic capacitros are acceptable. If polarized tantalum or electrolytic capacitors are used, they should be connected as shown.

Figure 4. Typical Operating Circuit and Capacitor Values

Copyright © 2006–2009, Texas Instruments Incorporated

PACKAGING INFORMATION

Orderable Device	Status (1)	Package Type	Package Drawing	Pins	Package Qty	Eco Plan (2)	Lead finish/ Ball material (6)	MSL Peak Temp (3)	Op Temp (°C)	Device Marking (4/5)	Samples
MAX3232MDBREP	ACTIVE	SSOP	DB	16	2000	RoHS & Green	NIPDAU	Level-1-260C-UNLIM	-55 to 125	MB3232M	Samples
MAX3232MPWREP	ACTIVE	TSSOP	PW	16	2000	RoHS & Green	NIPDAU	Level-1-260C-UNLIM	-55 to 125	MB3232M	Samples
V62/06623-01XE	ACTIVE	SSOP	DB	16	2000	RoHS & Green	NIPDAU	Level-1-260C-UNLIM	-55 to 125	MB3232M	Samples
V62/06623-01YE	ACTIVE	TSSOP	PW	16	2000	RoHS & Green	NIPDAU	Level-1-260C-UNLIM	-55 to 125	MB3232M	Samples

(1) The marketing status values are defined as follows:
ACTIVE: Product device recommended for new designs.
LIFEBUY: TI has announced that the device will be discontinued, and a lifetime-buy period is in effect.
NRND: Not recommended for new designs. Device is in production to support existing customers, but TI does not recommend using this part in a new design.
PREVIEW: Device has been announced but is not in production. Samples may or may not be available.
OBSOLETE: TI has discontinued the production of the device.

(2) **RoHS:** TI defines "RoHS" to mean semiconductor products that are compliant with the current EU RoHS requirements for all 10 RoHS substances, including the requirement that RoHS substance do not exceed 0.1% by weight in homogeneous materials. Where designed to be soldered at high temperatures, "RoHS" products are suitable for use in specified lead-free processes. TI may reference these types of products as "Pb-Free".
RoHS Exempt: TI defines "RoHS Exempt" to mean products that contain lead but are compliant with EU RoHS pursuant to a specific EU RoHS exemption.
Green: TI defines "Green" to mean the content of Chlorine (Cl) and Bromine (Br) based flame retardants meet JS709B low halogen requirements of <=1000ppm threshold. Antimony trioxide based flame retardants must also meet the <=1000ppm threshold requirement.

(3) MSL, Peak Temp. - The Moisture Sensitivity Level rating according to the JEDEC industry standard classifications, and peak solder temperature.

(4) There may be additional marking, which relates to the logo, the lot trace code information, or the environmental category on the device.

(5) Multiple Device Markings will be inside parentheses. Only one Device Marking contained in parentheses and separated by a "~" will appear on a device. If a line is indented then it is a continuation of the previous line and the two combined represent the entire Device Marking for that device.

(6) Lead finish/Ball material - Orderable Devices may have multiple material finish options. Finish options are separated by a vertical ruled line. Lead finish/Ball material values may wrap to two lines if the finish value exceeds the maximum column width.

Important Information and Disclaimer: The information provided on this page represents TI's knowledge and belief as of the date that it is provided. TI bases its knowledge and belief on information provided by third parties, and makes no representation or warranty as to the accuracy of such information. Efforts are underway to better integrate information from third parties. TI has taken and

continues to take reasonable steps to provide representative and accurate information but may not have conducted destructive testing or chemical analysis on incoming materials and chemicals. TI and TI suppliers consider certain information to be proprietary, and thus CAS numbers and other limited information may not be available for release.

In no event shall TI's liability arising out of such information exceed the total purchase price of the TI part(s) at issue in this document sold by TI to Customer on an annual basis.

OTHER QUALIFIED VERSIONS OF MAX3232-EP :

- Catalog: MAX3232

NOTE: Qualified Version Definitions:

- Catalog - TI's standard catalog product

TAPE AND REEL INFORMATION

REEL DIMENSIONS

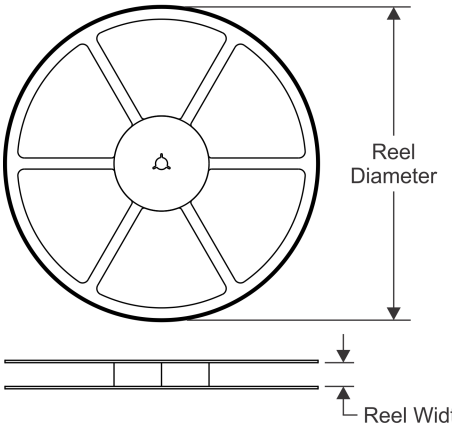

TAPE DIMENSIONS

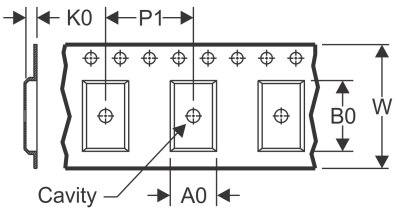

A0	Dimension designed to accommodate the component width
B0	Dimension designed to accommodate the component length
K0	Dimension designed to accommodate the component thickness
W	Overall width of the carrier tape
P1	Pitch between successive cavity centers

QUADRANT ASSIGNMENTS FOR PIN 1 ORIENTATION IN TAPE

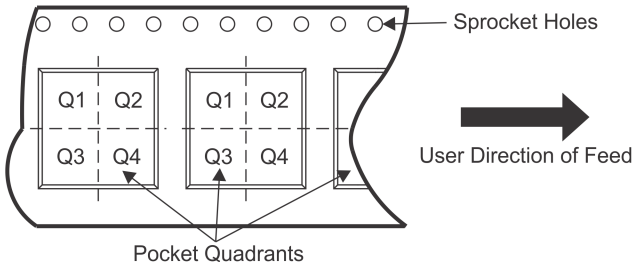

*All dimensions are nominal

Device	Package Type	Package Drawing	Pins	SPQ	Reel Diameter (mm)	Reel Width W1 (mm)	A0 (mm)	B0 (mm)	K0 (mm)	P1 (mm)	W (mm)	Pin1 Quadrant
MAX3232MDBREP	SSOP	DB	16	2000	330.0	16.4	8.35	6.6	2.5	12.0	16.0	Q1
MAX3232MPWREP	TSSOP	PW	16	2000	330.0	12.4	6.9	5.6	1.6	8.0	12.0	Q1

TAPE AND REEL BOX DIMENSIONS

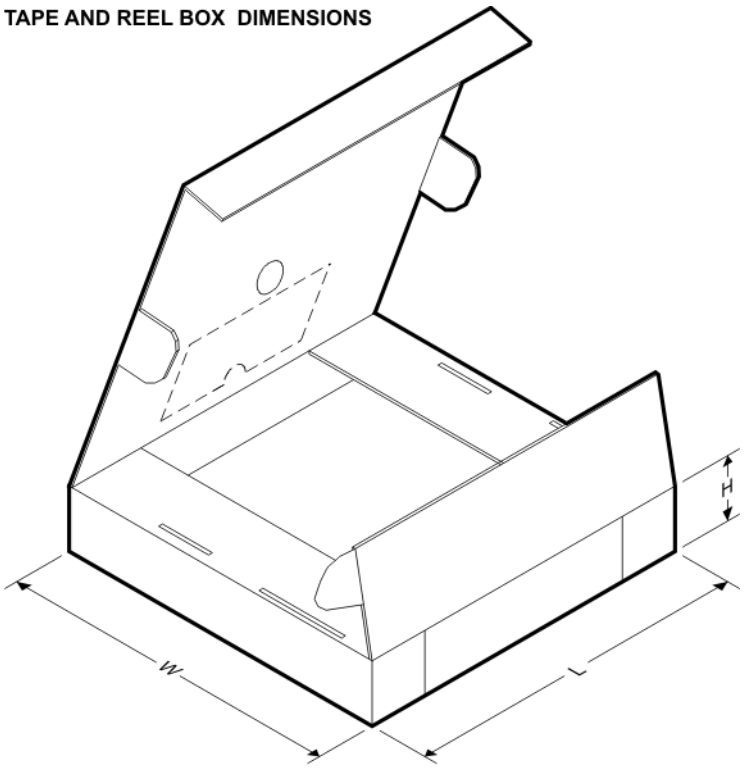

*All dimensions are nominal

Device	Package Type	Package Drawing	Pins	SPQ	Length (mm)	Width (mm)	Height (mm)
MAX3232MDBREP	SSOP	DB	16	2000	367.0	367.0	38.0
MAX3232MPWREP	TSSOP	PW	16	2000	853.0	449.0	35.0

MSSO002E – JANUARY 1995 – REVISED DECEMBER 2001

DB (R-PDSO-G)** **PLASTIC SMALL-OUTLINE**

28 PINS SHOWN

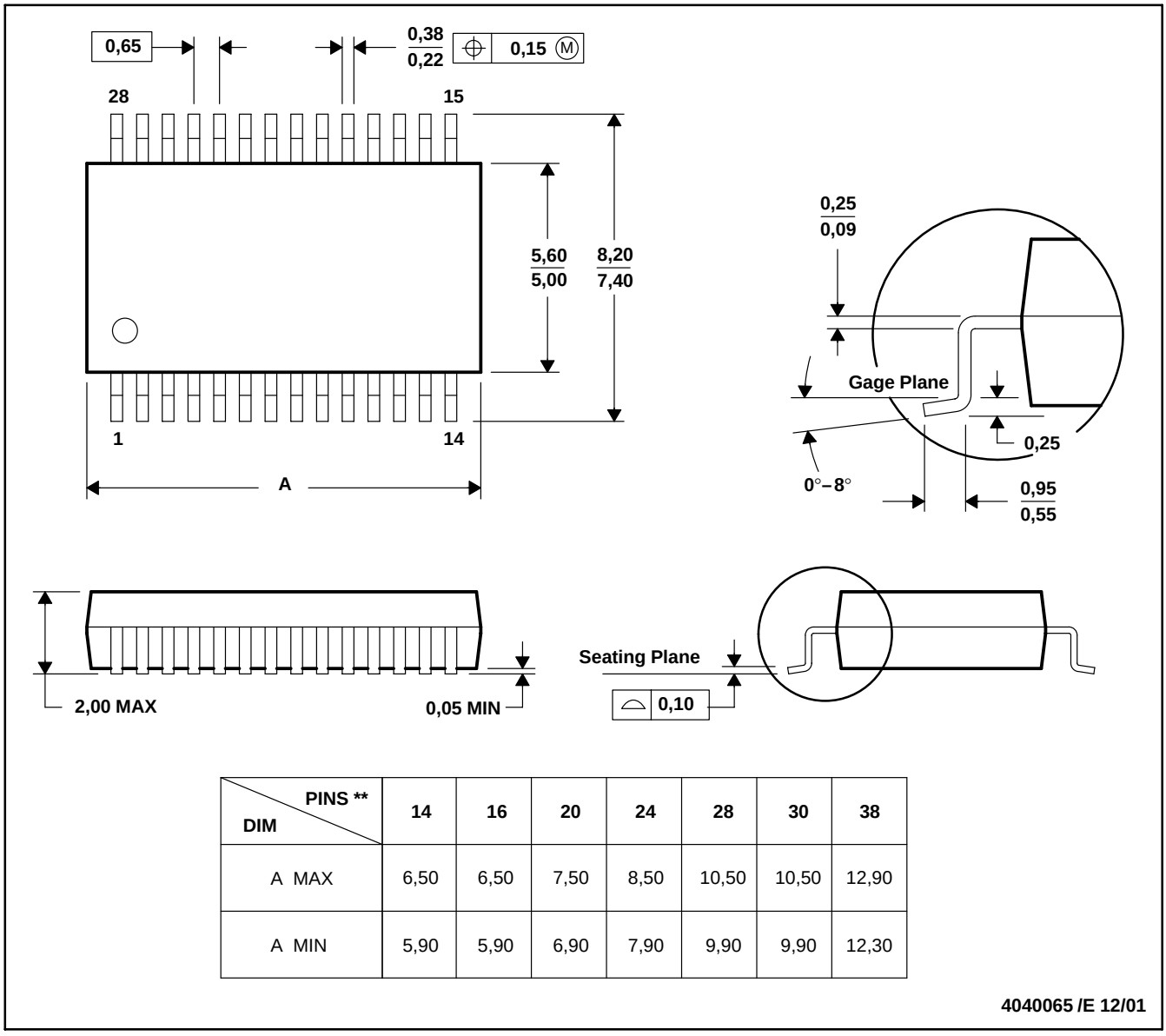

DIM \ PINS **	14	16	20	24	28	30	38
A MAX	6,50	6,50	7,50	8,50	10,50	10,50	12,90
A MIN	5,90	5,90	6,90	7,90	9,90	9,90	12,30

4040065 /E 12/01

NOTES: A. All linear dimensions are in millimeters.
B. This drawing is subject to change without notice.
C. Body dimensions do not include mold flash or protrusion not to exceed 0,15.
D. Falls within JEDEC MO-150

PACKAGE OUTLINE

PW0016A

TSSOP - 1.2 mm max height

SMALL OUTLINE PACKAGE

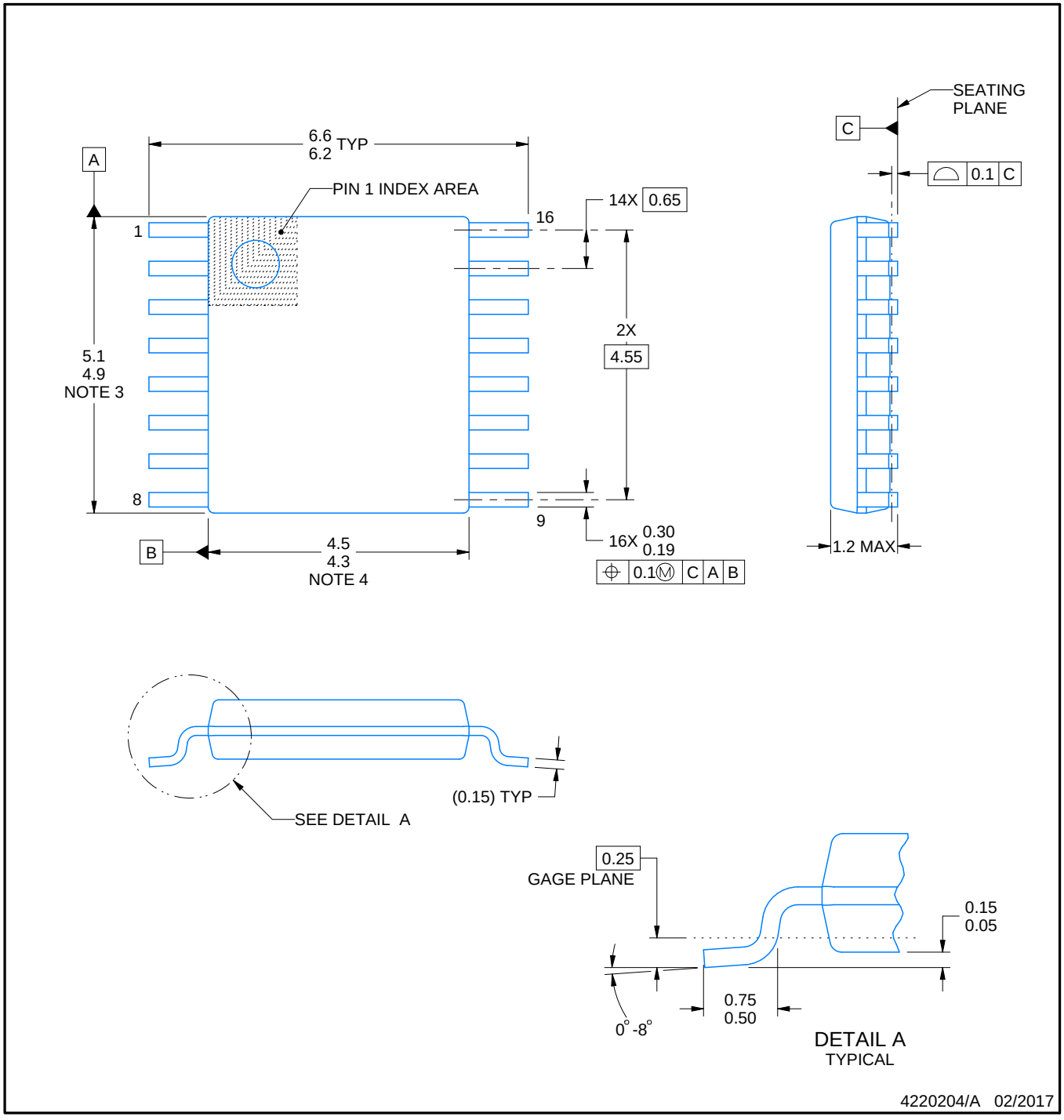

NOTES:

1. All linear dimensions are in millimeters. Any dimensions in parenthesis are for reference only. Dimensioning and tolerancing per ASME Y14.5M.
2. This drawing is subject to change without notice.
3. This dimension does not include mold flash, protrusions, or gate burrs. Mold flash, protrusions, or gate burrs shall not exceed 0.15 mm per side.
4. This dimension does not include interlead flash. Interlead flash shall not exceed 0.25 mm per side.
5. Reference JEDEC registration MO-153.

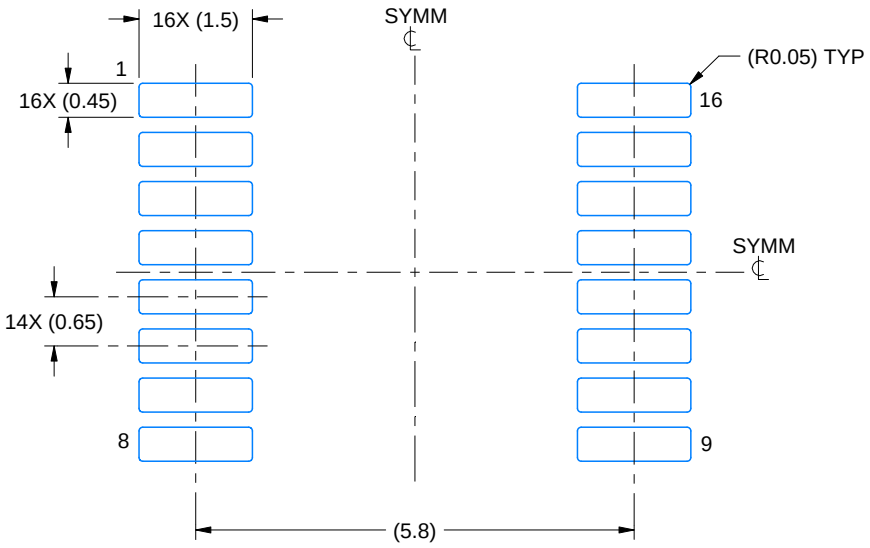

LAND PATTERN EXAMPLE
EXPOSED METAL SHOWN
SCALE: 10X

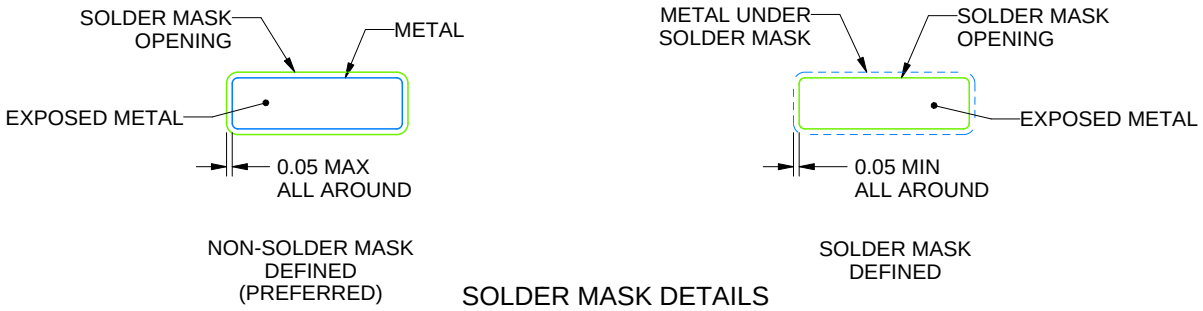

SOLDER MASK DETAILS

4220204/A 02/2017

NOTES: (continued)

6. Publication IPC-7351 may have alternate designs.
7. Solder mask tolerances between and around signal pads can vary based on board fabrication site.

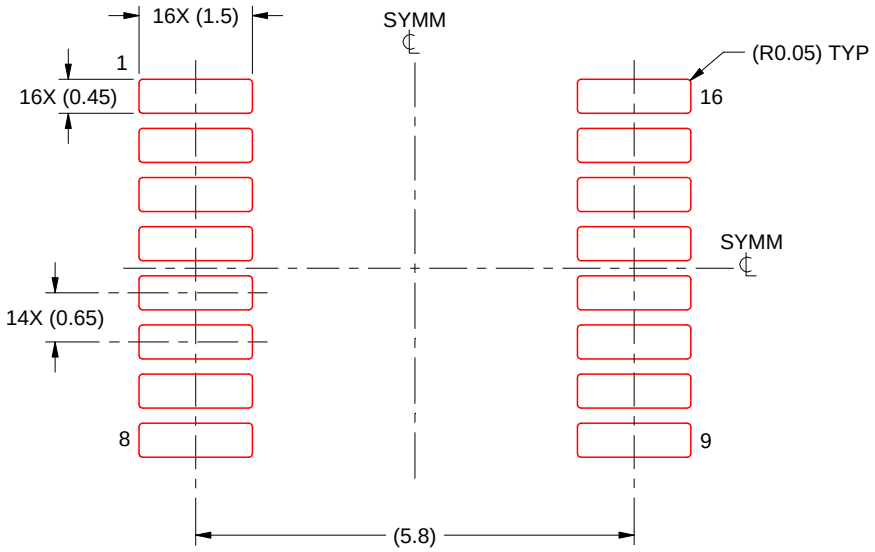

SOLDER PASTE EXAMPLE
BASED ON 0.125 mm THICK STENCIL
SCALE: 10X

4220204/A 02/2017

NOTES: (continued)

8. Laser cutting apertures with trapezoidal walls and rounded corners may offer better paste release. IPC-7525 may have alternate design recommendations.
9. Board assembly site may have different recommendations for stencil design.

IMPORTANT NOTICE AND DISCLAIMER

TI PROVIDES TECHNICAL AND RELIABILITY DATA (INCLUDING DATASHEETS), DESIGN RESOURCES (INCLUDING REFERENCE DESIGNS), APPLICATION OR OTHER DESIGN ADVICE, WEB TOOLS, SAFETY INFORMATION, AND OTHER RESOURCES “AS IS” AND WITH ALL FAULTS, AND DISCLAIMS ALL WARRANTIES, EXPRESS AND IMPLIED, INCLUDING WITHOUT LIMITATION ANY IMPLIED WARRANTIES OF MERCHANTABILITY, FITNESS FOR A PARTICULAR PURPOSE OR NON-INFRINGEMENT OF THIRD PARTY INTELLECTUAL PROPERTY RIGHTS.

These resources are intended for skilled developers designing with TI products. You are solely responsible for (1) selecting the appropriate TI products for your application, (2) designing, validating and testing your application, and (3) ensuring your application meets applicable standards, and any other safety, security, or other requirements. These resources are subject to change without notice. TI grants you permission to use these resources only for development of an application that uses the TI products described in the resource. Other reproduction and display of these resources is prohibited. No license is granted to any other TI intellectual property right or to any third party intellectual property right. TI disclaims responsibility for, and you will fully indemnify TI and its representatives against, any claims, damages, costs, losses, and liabilities arising out of your use of these resources.

TI’s products are provided subject to TI’s Terms of Sale (www.ti.com/legal/termsofsale.html) or other applicable terms available either on ti.com or provided in conjunction with such TI products. TI’s provision of these resources does not expand or otherwise alter TI’s applicable warranties or warranty disclaimers for TI products.

Mailing Address: Texas Instruments, Post Office Box 655303, Dallas, Texas 75265
Copyright © 2020, Texas Instruments Incorporated