3 引脚电压监控器
具备高态有效的推挽复位功能

查询样品: **TLV810M**, **TLV810R**, **TLV810S**, **TLV810Z**

特性

- **3** 引脚 **SOT23** 封装
- 电源电流：**9 μA**（典型值）
- 高精度电源电压监视器：
  2.5 V、**3 V**、**3.3 V**、**5 V**
- 具有 **200 ms** 固定延迟时间的上电复位发生器
- 与 **MAX810** 引脚对引脚兼容
- 温度范围：**–40°C** 至 **+125°C**
- 推挽，复位输出

应用

- **DSP**、微控制器和微处理器
- 无线通信系统
- 便携式/电池供电型设备
- 可编程逻辑控制器
- 智能仪器
- 工业设备
- 笔记本电脑及台式电脑
- 汽车系统

器件系列比较

器件	功能
TLV803	漏极开路，$\overline{\text{复位}}$ 输出
TLV809	推挽，$\overline{\text{复位}}$ 输出
TLV810	推挽，复位输出

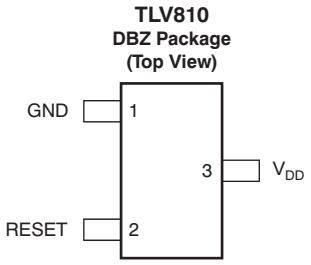

说明

此TLV810 监控电路系列可提供电路初始化及定时监控功能，主要面向基于DSP 和处理器的系统。

在上电期间，RESET 在如下条件下被置为有效，即：当电源电压 (V_{DD}) 变至高于1.1 V时 。 其后，监控电路将监视 V_{DD} 并将 RESET 保持在运行状态 — 只 要 V_{DD} 保持低于门限电压 V_{IT} 即可。 一个内部定时器负责延迟输出恢复至待机状态（低电平），以确保正确的系统复位。 延迟时间 ($t_{d(typ)}$ = 200 ms) 在 V_{DD} 上升至高于门限电压 V_{IT} 之后起始。 当电源电压降至 V_{IT} 门限电压以下时，输出重新变至运行（低电平）状态。无需外部组件。 该系列中的所有器件都具有一个由内部分压器设定的固定检测门限电压 (V_{IT})。

该产品系列专为 2.5 V、3 V、3.3 V 和 5 V 电源电压而设计。这些监控集成电路采用 3 引脚 SOT-23 封装。TLV810 器件针对 －40℃ 至 ＋125℃ 温度范围内的运作进行了特性分析。

典型应用

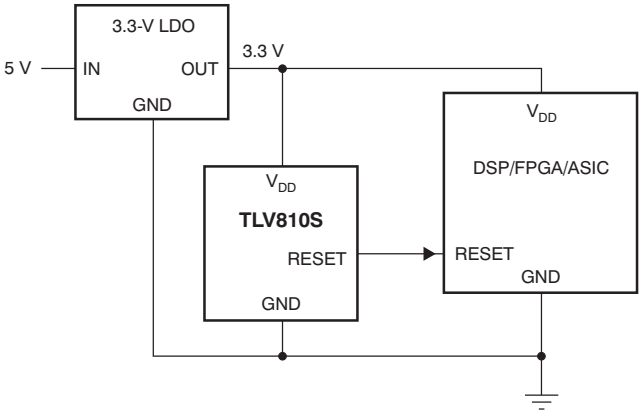

Please be aware that an important notice concerning availability, standard warranty, and use in critical applications of Texas Instruments semiconductor products and disclaimers thereto appears at the end of this data sheet.
All trademarks are the property of their respective owners.

PRODUCTION DATA information is current as of publication date. Products conform to specifications per the terms of the Texas Instruments standard warranty. Production processing does not necessarily include testing of all parameters.

Copyright © 2011, Texas Instruments Incorporated
English Data Sheet: SBVS158A

This integrated circuit can be damaged by ESD. Texas Instruments recommends that all integrated circuits be handled with appropriate precautions. Failure to observe proper handling and installation procedures can cause damage.

ESD damage can range from subtle performance degradation to complete device failure. Precision integrated circuits may be more susceptible to damage because very small parametric changes could cause the device not to meet its published specifications.

PACKAGE/ORDERING INFORMATION(1)

PRODUCT	THRESHOLD VOLTAGE	PACKAGE-LEAD	PACKAGE DESIGNATOR	SPECIFIED OPERATING TEMPERATURE	PACKAGE MARKING	ORDERING INFORMATION	TRANSPORT MEDIA, QUANTITY
TLV810Z	2.25 V	SOT23-3	DBZ	–40°C to +125°C	VOVQ	TLV810ZDBZR	Tape and Reel, 3000
						TLV810ZDBZT	Tape and Reel, 250
TLV810R	2.64 V	SOT23-3	DBZ	–40°C to +125°C	VOWQ	TLV810RDBZR	Tape and Reel, 3000
						TLV810RDBZT	Tape and Reel, 250
TLV810S	2.93 V	SOT23-3	DBZ	–40°C to +125°C	VOXQ	TLV810SDBZR	Tape and Reel, 3000
						TLV810SDBZT	Tape and Reel, 250
TLV810M	4.38 V	SOT23-3	DBZ	–40°C to +125°C	VOYQ	TLV810MDBZR	Tape and Reel, 3000
						TLV810MDBZT	Tape and Reel, 250

(1) For the most current package and ordering information, see the Package Option Addendum at the end of this data sheet, or visit the device product folders at www.ti.com.

ABSOLUTE MAXIMUM RATINGS(1)

Over operating free-air temperature range (unless otherwise noted).

		VALUE		UNIT
		MIN	MAX	
Voltage	V_{DD}(2)	0	7	V
	All other pins(2)	–0.3	7	V
Current	Maximum low output current, I_{OL}		5	mA
	Maximum high output current, I_{OH}		–5	mA
	Input clamp current, I_{IK} ($V_I < 0$ or $V_I > V_{DD}$)		±20	mA
	Output clamp current, I_{OK} ($V_O < 0$ or $V_O > V_{DD}$)		±20	mA
Temperature	Operating free-air temperature range, T_A	–40	+125	°C
	Storage temperature range, T_{stg}	–65	+150	°C
	Soldering temperature		+260	°C

(1) Stresses beyond those listed under *Absolute Maximum Ratings* may cause permanent damage to the device. These are stress ratings only, and functional operation of the device at these or any other conditions beyond those indicated under *Recommended Operating Conditions* is not implied. Exposure to absolute-maximum-rated conditions for extended periods may affect device reliability.
(2) All voltage values are with respect to GND. For reliable operation the device should not be operated at 7 V for more than t = 1000h continuously.

THERMAL INFORMATION

THERMAL METRIC(1)		TLV810 DBZ 3 PINS	UNITS
θ_{JA}	Junction-to-ambient thermal resistance	286.9	°C/W
θ_{JCtop}	Junction-to-case (top) thermal resistance	105.6	
θ_{JB}	Junction-to-board thermal resistance	124.4	
ψ_{JT}	Junction-to-top characterization parameter	25.8	
ψ_{JB}	Junction-to-board characterization parameter	107.9	
θ_{JCbot}	Junction-to-case (bottom) thermal resistance	—	

(1) For more information about traditional and new thermal metrics, see the *IC Package Thermal Metrics* application report, SPRA953.

Copyright © 2011, Texas Instruments Incorporated

RECOMMENDED OPERATING CONDITIONS

At specified temperature range (unless otherwise noted).

		MIN	MAX	UNIT
V_{DD}	Supply voltage	1.1	6	V
T_A	Operating free-air temperature range	–40	+125	°C

ELECTRICAL CHARACTERISTICS

Over recommended operating free-air temperature range (unless otherwise noted).

PARAMETER			TEST CONDITIONS	MIN	TYP	MAX	UNIT
V_{OH}	High-level output voltage		V_{DD} = 2.0 V to 6 V, I_{OH} = –500 µA	V_{DD} – 0.2			V
			V_{DD} = 3.3 V, I_{OH} = –2 mA	V_{DD} – 0.4			
			V_{DD} = 6 V, I_{OH} = –4 mA, T_A = –40°C to +85°C	V_{DD} – 0.4			
			V_{DD} = 6 V, I_{OH} = –4 mA, T_A = +85°C to +125°C	V_{DD} – 0.5			
V_{OL}	Low-level output voltage		V_{DD} = 2.5 V to 6 V, I_{OL} = 500 µA			0.2	V
			V_{DD} = 3.3 V, I_{OL} = 2 mA			0.4	
			V_{DD} = 6 V, I_{OL} = 4 mA			0.4	
	Power-up reset voltage (1)		$V_{OH} \geq V_{DD}$ – 0.2 V, I_{OH} = –50 µA	1.1			V
V_{IT-}	Negative-going input threshold voltage (2)	TLV810Z		2.20	2.25	2.30	V
		TLV810R		2.58	2.64	2.70	
		TLV810S		2.87	2.93	2.99	
		TLV810M		4.28	4.38	4.48	
V_{hys}	Hysteresis	TLV810Z	I_{OH} = –50 µA, T_A = +25°C		30		mV
		TLV810R			35		
		TLV810S			40		
		TLV810M			60		
I_{DD}	Supply current		V_{DD} = 2 V, output unconnected		9	15	µA
			V_{DD} = 6 V, output unconnected		20	30	

(1) The lowest supply voltage at which RESET becomes valid. $t_{r,\ VDD} \leq$ 66.7 ms/V.
(2) To ensure best stability of the threshold voltage, a bypass capacitor (0.1-µF ceramic) should be placed near the supply terminals.

Copyright © 2011, Texas Instruments Incorporated

SWITCHING CHARACTERISTICS

At T_A = +25°C, unless otherwise noted.

PARAMETER		TEST CONDITIONS	MIN	TYP	MAX	UNIT
t_w	Pulse width at V_{DD}	V_{DD} = 1.08 V_{IT-} to 0.92 V_{IT-}		1		µs
t_d	Delay time	$V_{DD} \geq V_{IT-}$ + 0.2 V; see Timing Diagram	120	200	280	ms

TIMING DIAGRAM

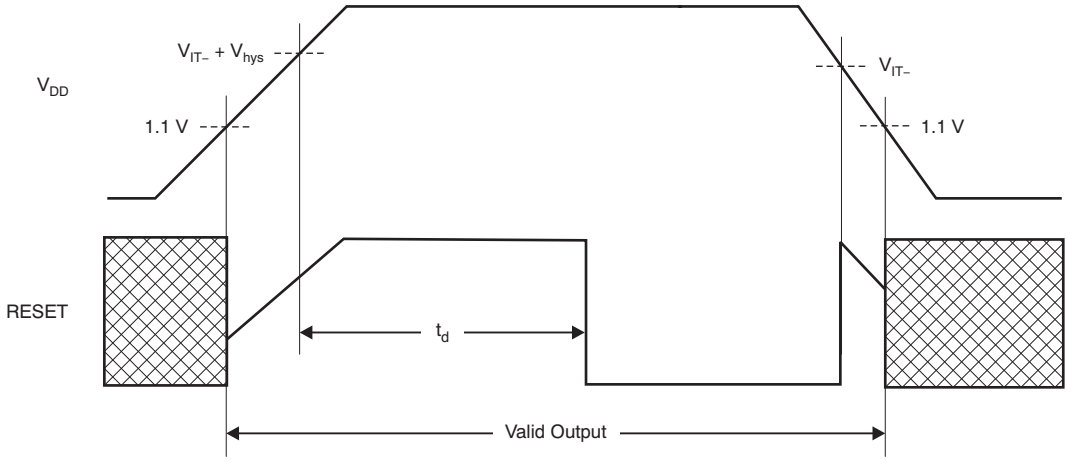

FUNCTIONAL BLOCK DIAGRAM

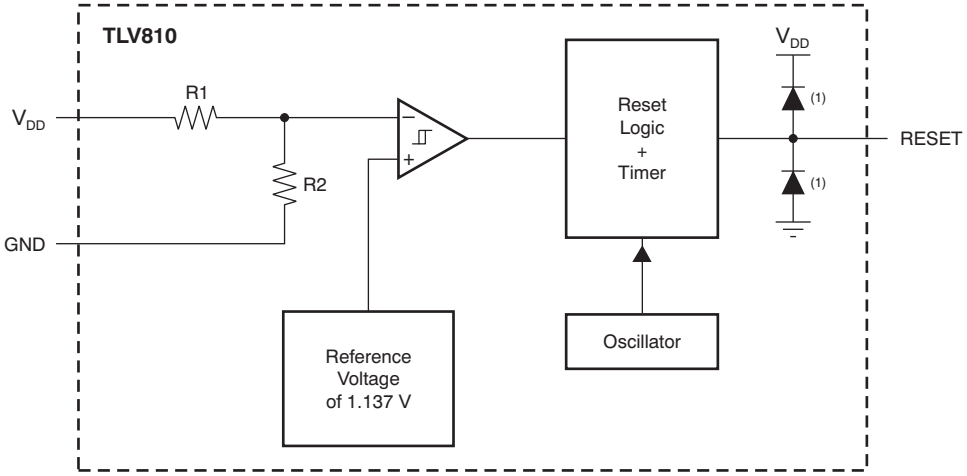

(1) Parasitic diode.

Copyright © 2011, Texas Instruments Incorporated

TYPICAL CHARACTERISTICS

At T_A = +25°C, V_{IT-} = 4.38 V, and V_{DD} = 5.0 V, unless otherwise noted.

LOW-LEVEL OUTPUT VOLTAGE vs LOW-LEVEL OUTPUT CURRENT

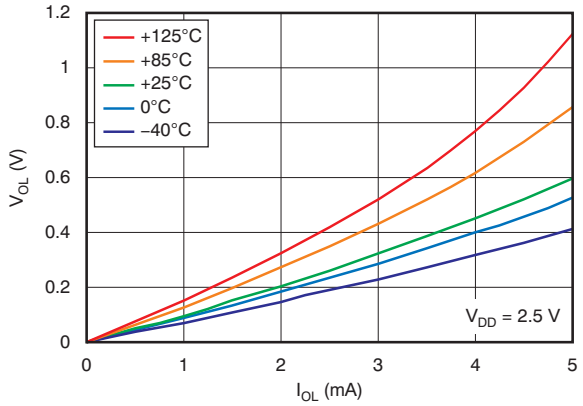

Figure 1.

SUPPLY CURRENT vs SUPPLY VOLTAGE

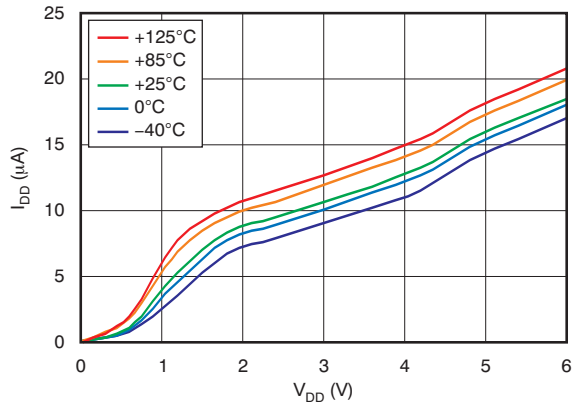

Figure 2.

HIGH-LEVEL OUTPUT VOLTAGE vs HIGH-LEVEL OUTPUT CURRENT

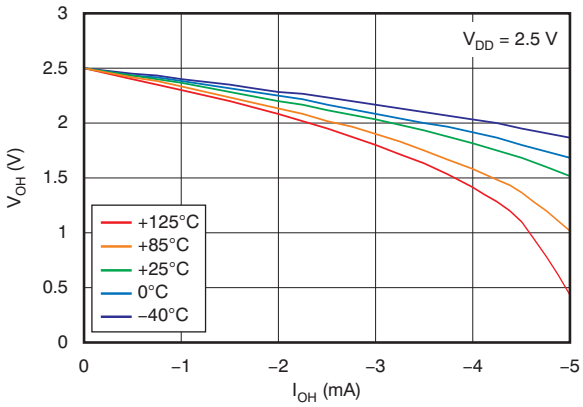

Figure 3.

NORMALIZED INPUT THRESHOLD VOLTAGE vs FREE-AIR TEMPERATURE AT V_{DD}

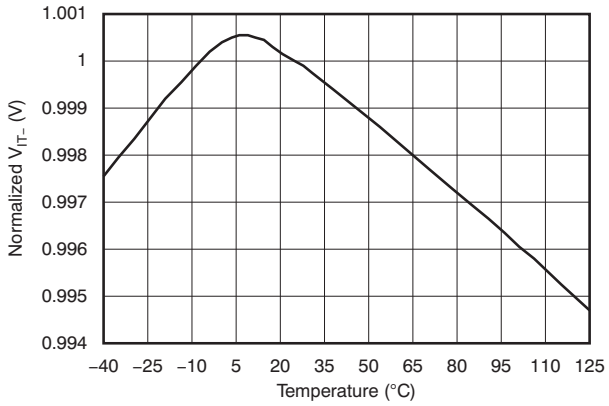

Figure 4.

MINIMUM PULSE DURATION AT V_{DD} vs V_{DD} THRESHOLD OVERDRIVE VOLTAGE (TLV810M)

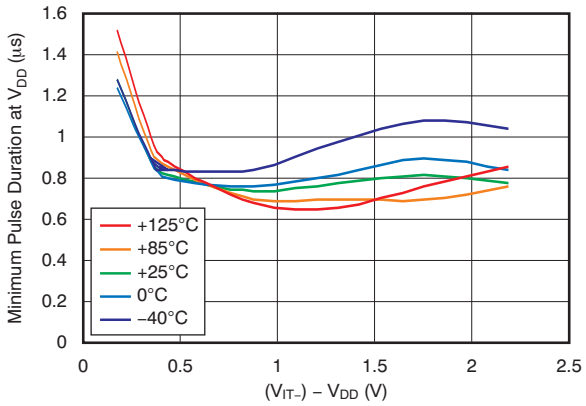

Figure 5.

DELAY TIME vs TEMPERATURE

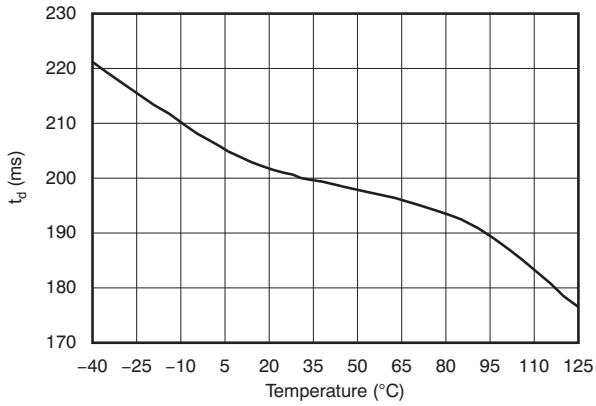

Figure 6.

Copyright © 2011, Texas Instruments Incorporated

APPLICATION INFORMATION

V_{DD} TRANSIENT REJECTION

The TLV810 has built-in rejection of fast transients on the V_{DD} pin. The rejection of transients depends on both the duration and the amplitude of the transient. The amplitude of the transient is measured from the bottom of the transient to the negative threshold voltage of the TLV810, as shown in Figure 7.

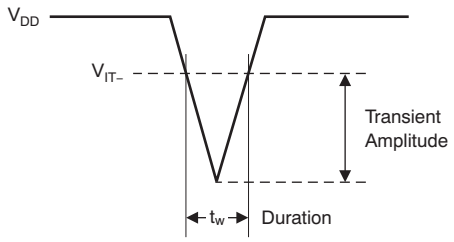

Figure 7. Voltage Transient Measurement

The TLV810 does not respond to transients that are fast duration/low amplitude or long duration/small amplitude. Figure 5 shows the relationship between the transient amplitude and the duration needed to trigger a reset. Any combination of duration and amplitude above the curve generates a reset signal.

RESET DURING POWER UP/DOWN

The TLV810 output is valid when V_{DD} is greater than 1.1 V. When V_{DD} is less than 1.1 V, the output is undefined. Figure 8 shows a typical waveform for the power-up sequence.

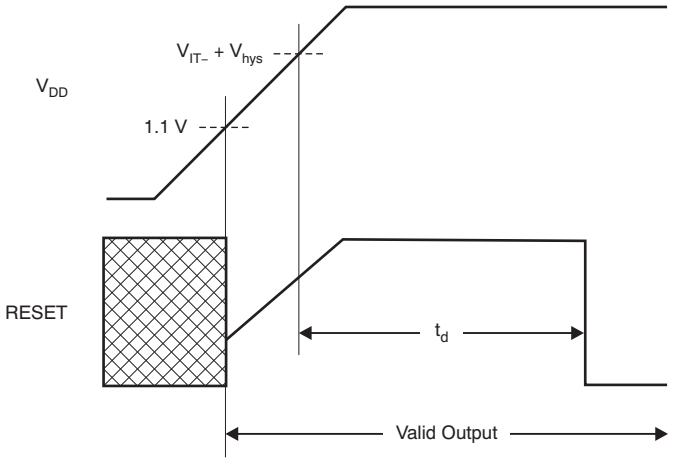

Figure 8. Power-Up Response

Copyright © 2011, Texas Instruments Incorporated

BIDIRECTIONAL RESET PINS

Some microcontrollers have bidirectional reset pins that act as both inputs and outputs. In a situation where both the TLV810 and the microcontroller are attempting to drive the RESET line, a series resistor should be placed between the output of the TLV810 and the RESET pin of the microcontroller to protect against excessive current flow. Figure 9 shows the connection of the TLV810 to a microcontroller using a series resistor to drive a bidirectional RESET line.

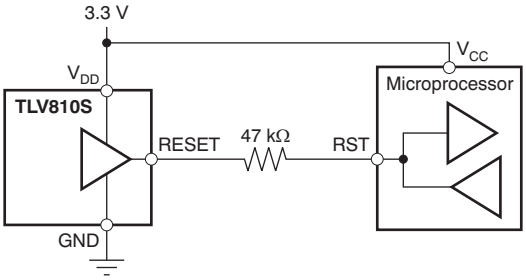

Figure 9. Connection to Bidirectional Reset Pin

Copyright © 2011, Texas Instruments Incorporated

PACKAGING INFORMATION

Orderable Device	Status (1)	Package Type	Package Drawing	Pins	Package Qty	Eco Plan (2)	Lead finish/ Ball material (6)	MSL Peak Temp (3)	Op Temp (°C)	Device Marking (4/5)	Samples
TLV810MDBZR	ACTIVE	SOT-23	DBZ	3	3000	RoHS & Green	NIPDAUAG	Level-1-260C-UNLIM	-40 to 125	VOYQ	Samples
TLV810MDBZT	ACTIVE	SOT-23	DBZ	3	250	RoHS & Green	NIPDAUAG	Level-1-260C-UNLIM	-40 to 125	VOYQ	Samples
TLV810RDBZR	ACTIVE	SOT-23	DBZ	3	3000	RoHS & Green	NIPDAUAG	Level-1-260C-UNLIM	-40 to 125	VOWQ	Samples
TLV810RDBZT	ACTIVE	SOT-23	DBZ	3	250	RoHS & Green	NIPDAUAG	Level-1-260C-UNLIM	-40 to 125	VOWQ	Samples
TLV810SDBZR	ACTIVE	SOT-23	DBZ	3	3000	RoHS & Green	NIPDAUAG	Level-1-260C-UNLIM	-40 to 125	VOXQ	Samples
TLV810SDBZT	ACTIVE	SOT-23	DBZ	3	250	RoHS & Green	NIPDAUAG	Level-1-260C-UNLIM	-40 to 125	VOXQ	Samples
TLV810ZDBZR	ACTIVE	SOT-23	DBZ	3	3000	RoHS & Green	NIPDAUAG	Level-1-260C-UNLIM	-40 to 125	VOVQ	Samples
TLV810ZDBZT	ACTIVE	SOT-23	DBZ	3	250	RoHS & Green	NIPDAUAG	Level-1-260C-UNLIM	-40 to 125	VOVQ	Samples

(1) The marketing status values are defined as follows:
ACTIVE: Product device recommended for new designs.
LIFEBUY: TI has announced that the device will be discontinued, and a lifetime-buy period is in effect.
NRND: Not recommended for new designs. Device is in production to support existing customers, but TI does not recommend using this part in a new design.
PREVIEW: Device has been announced but is not in production. Samples may or may not be available.
OBSOLETE: TI has discontinued the production of the device.

(2) **RoHS:** TI defines "RoHS" to mean semiconductor products that are compliant with the current EU RoHS requirements for all 10 RoHS substances, including the requirement that RoHS substance do not exceed 0.1% by weight in homogeneous materials. Where designed to be soldered at high temperatures, "RoHS" products are suitable for use in specified lead-free processes. TI may reference these types of products as "Pb-Free".
RoHS Exempt: TI defines "RoHS Exempt" to mean products that contain lead but are compliant with EU RoHS pursuant to a specific EU RoHS exemption.
Green: TI defines "Green" to mean the content of Chlorine (Cl) and Bromine (Br) based flame retardants meet JS709B low halogen requirements of <=1000ppm threshold. Antimony trioxide based flame retardants must also meet the <=1000ppm threshold requirement.

(3) MSL, Peak Temp. - The Moisture Sensitivity Level rating according to the JEDEC industry standard classifications, and peak solder temperature.

(4) There may be additional marking, which relates to the logo, the lot trace code information, or the environmental category on the device.

(5) Multiple Device Markings will be inside parentheses. Only one Device Marking contained in parentheses and separated by a "~" will appear on a device. If a line is indented then it is a continuation of the previous line and the two combined represent the entire Device Marking for that device.

(6) Lead finish/Ball material - Orderable Devices may have multiple material finish options. Finish options are separated by a vertical ruled line. Lead finish/Ball material values may wrap to two lines if the finish value exceeds the maximum column width.

Important Information and Disclaimer: The information provided on this page represents TI's knowledge and belief as of the date that it is provided. TI bases its knowledge and belief on information provided by third parties, and makes no representation or warranty as to the accuracy of such information. Efforts are underway to better integrate information from third parties. TI has taken and continues to take reasonable steps to provide representative and accurate information but may not have conducted destructive testing or chemical analysis on incoming materials and chemicals. TI and TI suppliers consider certain information to be proprietary, and thus CAS numbers and other limited information may not be available for release.

In no event shall TI's liability arising out of such information exceed the total purchase price of the TI part(s) at issue in this document sold by TI to Customer on an annual basis.

TAPE AND REEL INFORMATION

REEL DIMENSIONS

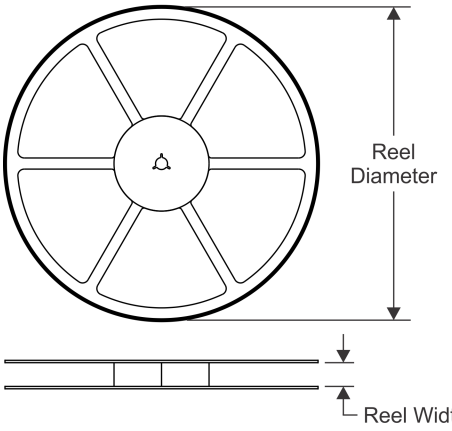

TAPE DIMENSIONS

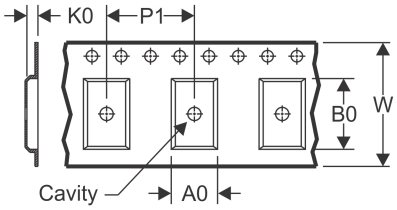

A0	Dimension designed to accommodate the component width
B0	Dimension designed to accommodate the component length
K0	Dimension designed to accommodate the component thickness
W	Overall width of the carrier tape
P1	Pitch between successive cavity centers

QUADRANT ASSIGNMENTS FOR PIN 1 ORIENTATION IN TAPE

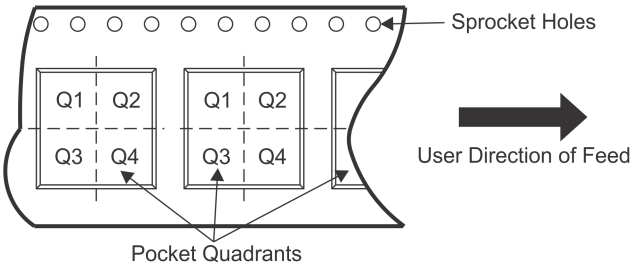

*All dimensions are nominal

Device	Package Type	Package Drawing	Pins	SPQ	Reel Diameter (mm)	Reel Width W1 (mm)	A0 (mm)	B0 (mm)	K0 (mm)	P1 (mm)	W (mm)	Pin1 Quadrant
TLV810MDBZR	SOT-23	DBZ	3	3000	179.0	8.4	3.15	2.95	1.22	4.0	8.0	Q3
TLV810MDBZT	SOT-23	DBZ	3	250	179.0	8.4	3.15	2.95	1.22	4.0	8.0	Q3
TLV810RDBZR	SOT-23	DBZ	3	3000	179.0	8.4	3.15	2.95	1.22	4.0	8.0	Q3
TLV810RDBZT	SOT-23	DBZ	3	250	179.0	8.4	3.15	2.95	1.22	4.0	8.0	Q3
TLV810SDBZR	SOT-23	DBZ	3	3000	179.0	8.4	3.15	2.95	1.22	4.0	8.0	Q3
TLV810SDBZT	SOT-23	DBZ	3	250	179.0	8.4	3.15	2.95	1.22	4.0	8.0	Q3
TLV810ZDBZR	SOT-23	DBZ	3	3000	179.0	8.4	3.15	2.95	1.22	4.0	8.0	Q3
TLV810ZDBZT	SOT-23	DBZ	3	250	179.0	8.4	3.15	2.95	1.22	4.0	8.0	Q3

TAPE AND REEL BOX DIMENSIONS

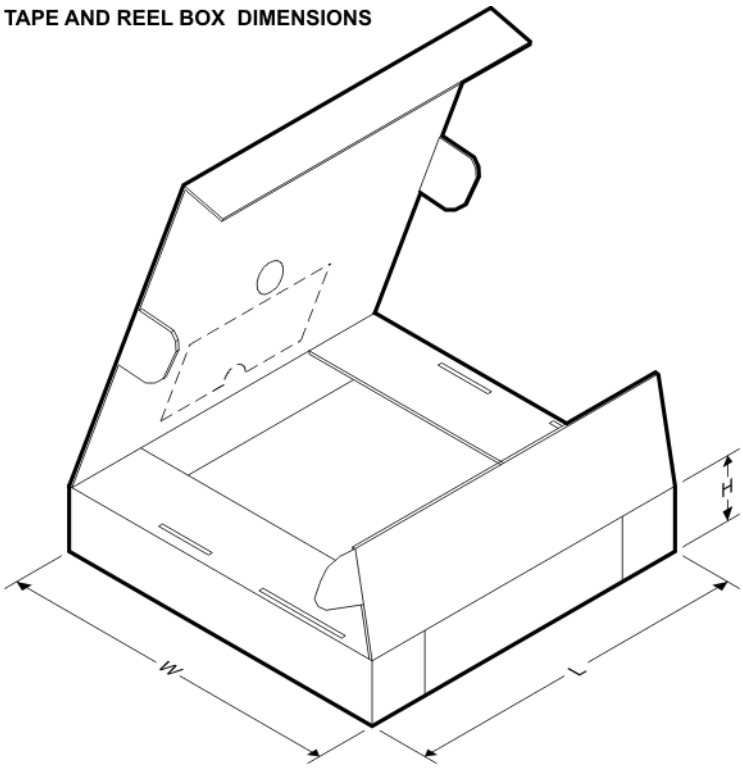

*All dimensions are nominal

Device	Package Type	Package Drawing	Pins	SPQ	Length (mm)	Width (mm)	Height (mm)
TLV810MDBZR	SOT-23	DBZ	3	3000	200.0	183.0	25.0
TLV810MDBZT	SOT-23	DBZ	3	250	203.0	203.0	35.0
TLV810RDBZR	SOT-23	DBZ	3	3000	200.0	183.0	25.0
TLV810RDBZT	SOT-23	DBZ	3	250	200.0	183.0	25.0
TLV810SDBZR	SOT-23	DBZ	3	3000	203.0	203.0	35.0
TLV810SDBZT	SOT-23	DBZ	3	250	200.0	183.0	25.0
TLV810ZDBZR	SOT-23	DBZ	3	3000	203.0	203.0	35.0
TLV810ZDBZT	SOT-23	DBZ	3	250	203.0	203.0	35.0

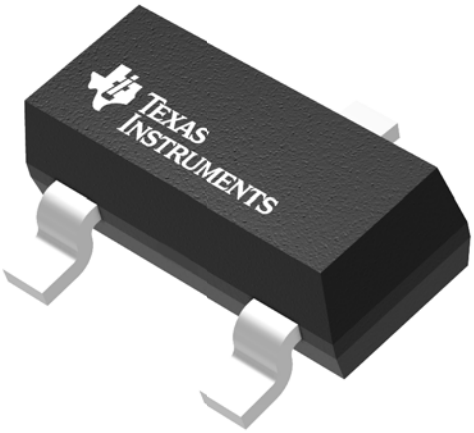

Images above are just a representation of the package family, actual package may vary.
Refer to the product data sheet for package details.

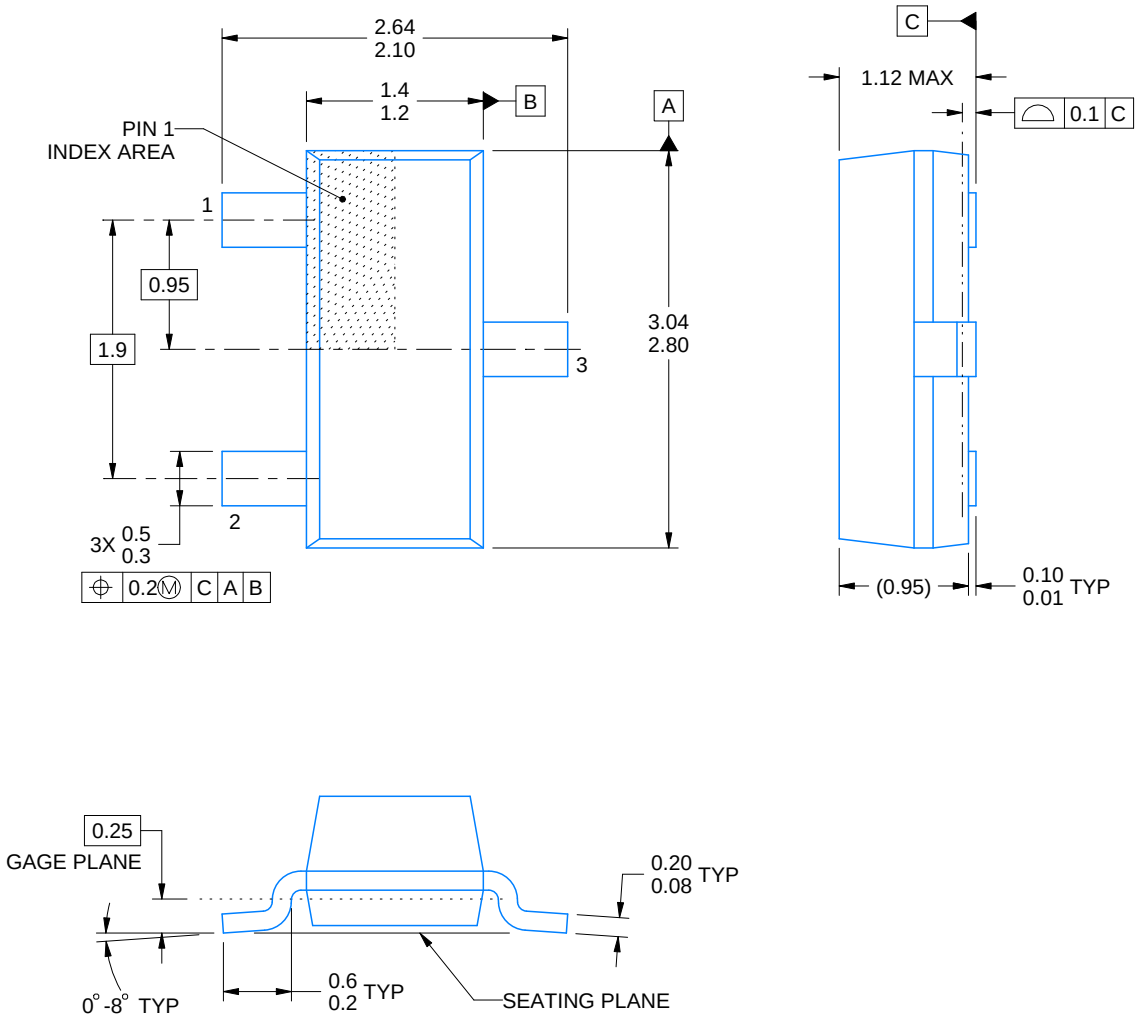

4214838/C 04/2017

NOTES:

1. All linear dimensions are in millimeters. Any dimensions in parenthesis are for reference only. Dimensioning and tolerancing per ASME Y14.5M.
2. This drawing is subject to change without notice.
3. Reference JEDEC registration TO-236, except minimum foot length.

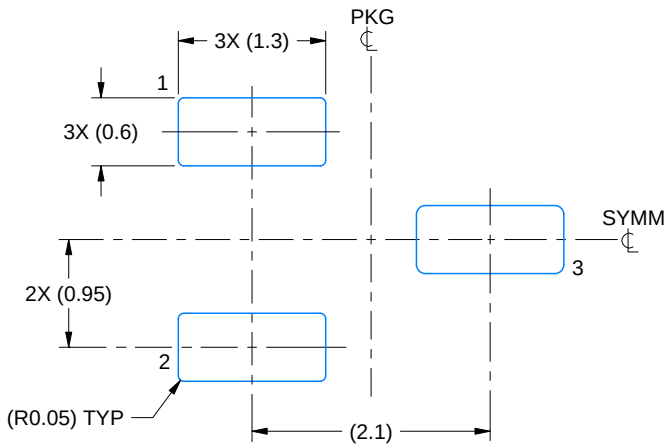

LAND PATTERN EXAMPLE
SCALE:15X

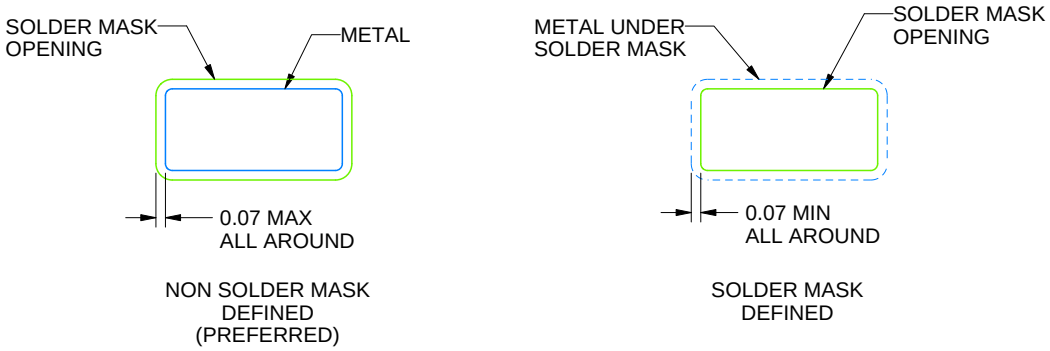

SOLDER MASK DETAILS

4214838/C 04/2017

NOTES: (continued)

4. Publication IPC-7351 may have alternate designs.
5. Solder mask tolerances between and around signal pads can vary based on board fabrication site.

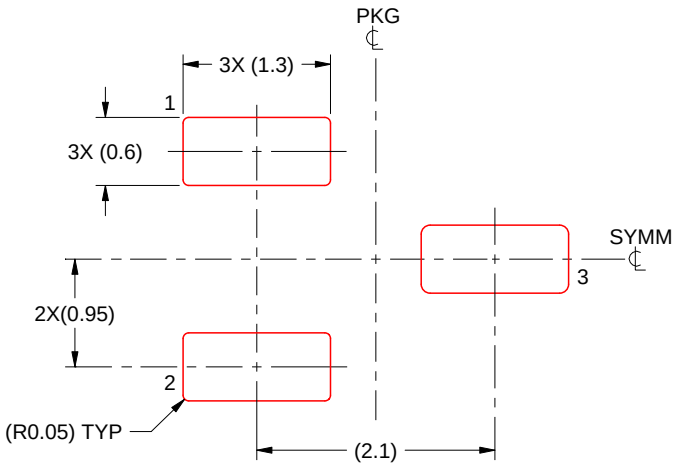

SOLDER PASTE EXAMPLE
BASED ON 0.125 THICK STENCIL
SCALE:15X

4214838/C 04/2017

NOTES: (continued)

6. Laser cutting apertures with trapezoidal walls and rounded corners may offer better paste release. IPC-7525 may have alternate design recommendations.
7. Board assembly site may have different recommendations for stencil design.

重要声明和免责声明

TI 提供技术和可靠性数据（包括数据表）、设计资源（包括参考设计）、应用或其他设计建议、网络工具、安全信息和其他资源，不保证没有瑕疵且不做出任何明示或暗示的担保，包括但不限于对适销性、某特定用途方面的适用性或不侵犯任何第三方知识产权的暗示担保。

这些资源可供使用 TI 产品进行设计的熟练开发人员使用。您将自行承担以下全部责任：(1) 针对您的应用选择合适的 TI 产品，(2) 设计、验证并测试您的应用，(3) 确保您的应用满足相应标准以及任何其他安全、安保或其他要求。这些资源如有变更，恕不另行通知。TI 授权您仅可将这些资源用于研发本资源所述的 TI 产品的应用。严禁对这些资源进行其他复制或展示。您无权使用任何其他 TI 知识产权或任何第三方知识产权。您应全额赔偿因在这些资源的使用中对 TI 及其代表造成的任何索赔、损害、成本、损失和债务，TI 对此概不负责。

TI 提供的产品受 TI 的销售条款 (https:www.ti.com.cn/zh-cn/legal/termsofsale.html) 或 ti.com.cn 上其他适用条款/TI 产品随附的其他适用条款的约束。TI 提供这些资源并不会扩展或以其他方式更改 TI 针对 TI 产品发布的适用的担保或担保免责声明。

邮寄地址：上海市浦东新区世纪大道 1568 号中建大厦 32 楼，邮政编码：200122
Copyright © 2021 德州仪器半导体技术（上海）有限公司