LMV3xxA 低电压轨至轨输出运算放大器

1 特性

- 低输入失调电压：±1mV
- 轨至轨输出
- 单位增益带宽：1MHz
- 低宽带噪声：30nV/√Hz
- 低输入偏置电流：10pA
- 低静态电流：70µA/通道
- 单位增益稳定
- 内置 RFI 和 EMI 滤波器
- 可在电源电压低至 2.5V 的情况下运行
- 由于具有电阻式开环输出阻抗，因此可在更高的容性负载下更轻松地实现稳定
- 工作温度范围：–40°C 至 125°C

2 应用

- 烟雾探测器
- 运动检测器
- 可穿戴设备
- 大型和小型家用电器
- EPOS
- 条形码扫描仪
- 传感器信号调节
- 电源模块
- 个人电子产品
- 有源滤波器
- HVAC：暖通空调
- 电机控制：交流感应
- 低侧电流检测

3 说明

LMV3xxA 系列包括单通道 - (LMV321A)、双通道 - (LMV358A) 以及四通道 (LMV324A) 低电压（2.5V 至 5.5V）运算放大器，具有轨至轨输出摆幅能力。这些运算放大器为需要低工作电压和高电容负载驱动器并且空间受限的 应用 （大型电器、烟雾探测器和个人电子产品）提供了具有成本效益的解决方案。LMV3xxA 系列的电容负载驱动器具有 500pF 的电容，而电阻式开环输出阻抗使其能够在更高的电容负载下更轻松地实现稳定。这些运算放大器专为低工作电压(2.5V 至 5.5V) 而设计，性能规格类似于 LMV3xx 器件。

LMV3xxA 系列稳健耐用的设计可简化电路设计。这些运算放大器具有单位增益稳定性，集成了 RFI 和 EMI 抑制滤波器，并且在过驱情况下不会出现相位反转。

LMV3xxA 系列采用行业标准封装（如 SOIC、MSOP、SOT-23 和 TSSOP 封装）。

器件信息(1)

器件型号	封装	封装尺寸（标称值）
LMV321A	SOT-23 (5)	1.60mm × 2.90mm
	SC70 (5)	1.25mm × 2.00mm
LMV358A	SOIC (8)	3.91mm × 4.90mm
	TSSOP (8)	3.00mm x 4.40mm
	SOT-23 (8)	1.60mm × 2.90mm
	VSSOP (8)	3.00mm × 3.00mm
LMV324A	SOIC (14)	8.65mm × 3.91mm
	TSSOP (14)	4.40mm × 5.00mm

(1) 如需了解所有可用封装，请参阅数据表末尾的可订购产品附录。

单极低通滤波器

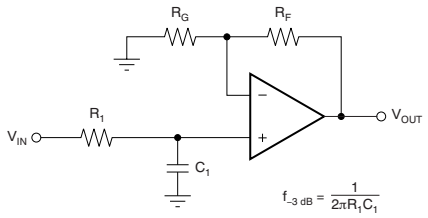

$$\frac{V_{OUT}}{V_{IN}} = \left(1 + \frac{R_F}{R_G}\right)\left(\frac{1}{1 + sR_1C_1}\right)$$

本文档旨在为方便起见，提供有关 TI 产品中文版本的信息，以确认产品的概要。 有关适用的官方英文版本的最新信息，请访问 www.ti.com，其内容始终优先。 TI 不保证翻译的准确性和有效性。 在实际设计之前，请务必参考最新版本的英文版本。

目录

1 特性 ... 1
2 应用 ... 1
3 说明 ... 1
4 修订历史记录 ... 2
5 **Pin Configuration and Functions** ... 4
6 **Specifications** ... 6
6.1 Absolute Maximum Ratings ... 6
6.2 ESD Ratings ... 6
6.3 Recommended Operating Conditions ... 6
6.4 Thermal Information: LMV321A ... 7
6.5 Thermal Information: LMV358A ... 7
6.6 Thermal Information: LMV324A ... 7
6.7 Electrical Characteristics ... 8
6.8 Typical Characteristics ... 9
7 **Detailed Description** ... 15
7.1 Overview ... 15
7.2 Functional Block Diagram ... 15
7.3 Feature Description ... 16
7.4 Device Functional Modes ... 16
8 **Application and Implementation** ... 17
8.1 Application Information ... 17
8.2 Typical Application ... 17
9 **Power Supply Recommendations** ... 22
9.1 Input and ESD Protection ... 22
10 **Layout** ... 23
10.1 Layout Guidelines ... 23
10.2 Layout Example ... 23
11 器件和文档支持 ... 24
11.1 文档支持 ... 24
11.2 相关链接 ... 24
11.3 接收文档更新通知 ... 24
11.4 社区资源 ... 24
11.5 商标 ... 24
11.6 静电放电警告 ... 24
11.7 Glossary ... 24
12 机械、封装和可订购信息 ... 24

4 修订历史记录

注：之前版本的页码可能与当前版本有所不同。

Changes from Revision D (November 2018) to Revision E — **Page**

- 已添加 向*器件信息* 添加了 SOT-23 (8) 封装 ... 1
- Added SOT-23 (8) (DDF) package to the *Pin Configuration and Functions* section ... 4
- Added DDF (SOT-23) package to *Thermal Information: LMV358A* ... 7

Changes from Revision C (August 2018) to Revision D — **Page**

- 将文件状态从“生产数据/混合”状态更改为“生产数据” ... 1
- 已更改 将 LMV321A SOT-23 和 SC70 封装状态从“预览”更改为“生产” ... 1
- 已更改 将 LMV324A SOIC 和 TSSOP 封装状态从“预览”更改为“生产” ... 1
- Deleted DBV (SOT-23) and DCK (SC70) package preview note from the LM321A *Thermal Information* table ... 7
- Deleted D (SOIC) and PW (TSSOP) package preview note from the LM324A *Thermal Information* table ... 7

Changes from Revision B (June 2018) to Revision C — **Page**

- 已更改 将 Iq 典型值从 80µA/通道更改为 70µA/通道 ... 1
- Changed typical Iq from 80 µA to 70 µA ... 8

Changes from Revision A (May 2018) to Revision B — **Page**

- 已添加 向*器件信息*表中添加了 SOT-23 封装 ... 1
- 已添加 向*器件信息* 表中添加了 SC70 封装 ... 1
- 已添加 向*器件信息* 表中添加了 TSSOP-8 封装 ... 1
- 已添加 向*器件信息表* 表中添加了 SOIC-14 封装 ... 1
- 已添加 向*器件信息* 表中添加了 TSSOP-14 封装 ... 1
- Added *Thermal Information: LMV321A* ... 7
- Added *Thermal Information: LMV324A* ... 7

版权 © 2017–2019, Texas Instruments Incorporated

Changes from Original (December 2017) to Revision A **Page**

- 已更改 将器件状态从“预告信息”更改为“生产数据/混合状态” 1
- Added DGK and PW package to the LMV358A *Thermal Information* table 7

5 Pin Configuration and Functions

LMV321A DBV Package
5-Pin SOT-23
Top View

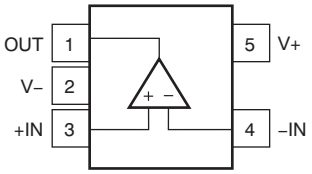

LMV321A DCK Package
5-Pin SC70
Top View

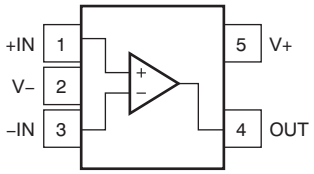

Pin Functions: LMV321A

PIN			I/O	DESCRIPTION
NAME	DBV	DCK		
–IN	4	3	I	Inverting input
+IN	3	1	I	Noninverting input
OUT	1	4	O	Output
V–	2	2	—	Negative (lowest) supply or ground (for single-supply operation)
V+	5	5	—	Positive (highest) supply

LMV358A D, DDF, DGK, PW Packages
8-Pin SOIC, VSSOP, TSSOP
Top View

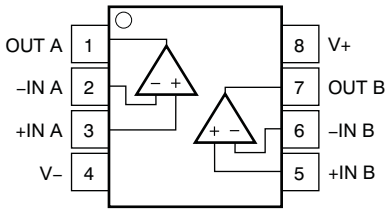

Pin Functions: LMV358A

PIN		I/O	DESCRIPTION
NAME	NO.		
–IN A	2	I	Inverting input, channel A
+IN A	3	I	Noninverting input, channel A
–IN B	6	I	Inverting input, channel B
+IN B	5	I	Noninverting input, channel B
OUT A	1	O	Output, channel A
OUT B	7	O	Output, channel B
V–	4	—	Negative (lowest) supply or ground (for single-supply operation)
V+	8	—	Positive (highest) supply

Copyright © 2017–2019, Texas Instruments Incorporated

LMV324A D, PW Packages
14-Pin SOIC, TSSOP
Top View

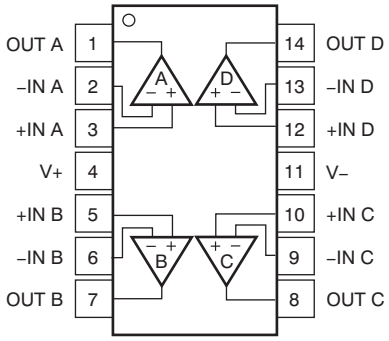

Pin Functions: LMV324A

PIN		I/O	DESCRIPTION
NAME	NO.		
–IN A	2	I	Inverting input, channel A
+IN A	3	I	Noninverting input, channel A
–IN B	6	I	Inverting input, channel B
+IN B	5	I	Noninverting input, channel B
–IN C	9	I	Inverting input, channel C
+IN C	10	I	Noninverting input, channel C
–IN D	13	I	Inverting input, channel D
+IN D	12	I	Noninverting input, channel D
OUT A	1	O	Output, channel A
OUT B	7	O	Output, channel B
OUT C	8	O	Output, channel C
OUT D	14	O	Output, channel D
V–	11	—	Negative (lowest) supply or ground (for single-supply operation)
V+	4	—	Positive (highest) supply

Copyright © 2017–2019, Texas Instruments Incorporated

6 Specifications

6.1 Absolute Maximum Ratings

over operating temperature range (unless otherwise noted)[1]

			MIN	MAX	UNIT
Supply voltage, ([V+] – [V–])			0	6	V
Signal input pins	Voltage[2]	Common-mode	(V–) – 0.5	(V+) + 0.5	V
		Differential		(V+) – (V–) + 0.2	V
	Current[2]		–10	10	mA
Output short-circuit[3]			Continuous		
Operating, T_A			–55	150	°C
Operating junction temperature, T_J				150	°C
Storag temperaturee, T_{stg}			–65	150	°C

(1) Stresses beyond those listed under *Absolute Maximum Ratings* may cause permanent damage to the device. These are stress ratings only, which do not imply functional operation of the device at these or any other conditions beyond those indicated under *Recommended Operating Conditions*. Exposure to absolute-maximum-rated conditions for extended periods may affect device reliability.
(2) Input pins are diode-clamped to the power-supply rails. Input signals that may swing more than 0.5 V beyond the supply rails must be current limited to 10 mA or less.
(3) Short-circuit to ground, one amplifier per package.

6.2 ESD Ratings

			VALUE	UNIT
$V_{(ESD)}$	Electrostatic discharge	Human-body model (HBM), per ANSI/ESDA/JEDEC JS-001[1]	±2000	V
		Charged-device model (CDM), per JEDEC specification JESD22-C101[2]	±1000	

(1) JEDEC document JEP155 states that 500-V HBM allows safe manufacturing with a standard ESD control process.
(2) JEDEC document JEP157 states that 250-V CDM allows safe manufacturing with a standard ESD control process.

6.3 Recommended Operating Conditions

over operating temperature range (unless otherwise noted)

		MIN	MAX	UNIT
V_S	Supply voltage	2.5	5.5	V
T_A	Specified temperature	–40	125	°C

Copyright © 2017–2019, Texas Instruments Incorporated

6.4 Thermal Information: LMV321A

THERMAL METRIC (1)		LMV321A		UNIT
		DBV (SOT-23)	DCK (SC70)	
		5 PINS	5 PINS	
$R_{\theta JA}$	Junction-to-ambient thermal resistance	232.8	239.6	°C/W
$R_{\theta JC(top)}$	Junction-to-case (top) thermal resistance	153.8	148.5	°C/W
$R_{\theta JB}$	Junction-to-board thermal resistance	100.9	82.3	°C/W
ψ_{JT}	Junction-to-top characterization parameter	77.2	54.5	°C/W
ψ_{JB}	Junction-to-board characterization parameter	100.4	81.8	°C/W
$R_{\theta JC(bot)}$	Junction-to-case (bottom) thermal resistance	N/A	N/A	°C/W

(1) For more information about traditional and new thermal metrics, see *Semiconductor and IC Package Thermal Metrics*

6.5 Thermal Information: LMV358A

THERMAL METRIC (1)		LMV358A				UNIT
		D (SOIC)	DGK (VSSOP)	PW (TSSOP)	DDF (SOT-23)	
		8 PINS	8 PINS	8 PINS	8 PINS	
$R_{\theta JA}$	Junction-to-ambient thermal resistance	147.4	201.2	205.8	183.7	°C/W
$R_{\theta JC(top)}$	Junction-to-case (top) thermal resistance	94.3	85.7	106.7	112.5	°C/W
$R_{\theta JB}$	Junction-to-board thermal resistance	89.5	122.9	133.9	98.2	°C/W
ψ_{JT}	Junction-to-top characterization parameter	47.3	21.2	34.4	18.8	°C/W
ψ_{JB}	Junction-to-board characterization parameter	89	121.4	132.6	97.6	°C/W

(1) For more information about traditional and new thermal metrics, see *Semiconductor and IC Package Thermal Metrics*

6.6 Thermal Information: LMV324A

THERMAL METRIC (1)		LMV324A		UNIT
		D (SOIC)	PW (TSSOP)	
		14 PINS	8 PINS	
$R_{\theta JA}$	Junction-to-ambient thermal resistance	102.1	148.3	°C/W
$R_{\theta JC(top)}$	Junction-to-case (top) thermal resistance	56.8	68.1	°C/W
$R_{\theta JB}$	Junction-to-board thermal resistance	58.5	92.7	°C/W
ψ_{JT}	Junction-to-top characterization parameter	20.5	16.9	°C/W
ψ_{JB}	Junction-to-board characterization parameter	58.1	91.8	°C/W

(1) For more information about traditional and new thermal metrics, see *Semiconductor and IC Package Thermal Metrics*

Copyright © 2017–2019, Texas Instruments Incorporated

6.7 Electrical Characteristics

For V_S = (V+) – (V–) = 2.5 V to 5.5 V (±0.9 V to ±2.75 V), T_A = 25 °C, R_L = 10 kΩ connected to V_S / 2, and V_{CM} = V_{OUT} = V_S / 2 (unless otherwise noted)

PARAMETER		TEST CONDITIONS	MIN	TYP	MAX	UNIT
OFFSET VOLTAGE						
V_{OS}	Input offset voltage	Vs = 5 V		±1	±4	mV
		Vs = 5 V, T_A = –40°C to 125°C			±5	mV
dV_{OS}/dT	V_{OS} vs temperature	T_A = –40°C to 125°C		±1		µV/°C
PSRR	Power-supply rejection ratio	V_S = 2.5 to 5.5 V, V_{CM} = (V–)	78	100		dB
INPUT VOLTAGE RANGE						
V_{CM}	Common-mode voltage range	No phase reversal, rail-to-rail input	(V–) – 0.1		(V+) – 1	V
CMRR	Common-mode rejection ratio	V_S = 2.5 V, (V–) – 0.1 V < V_{CM} < (V+) – 1.4 V T_A = –40°C to 125°C		86		dB
		V_S = 5.5 V, (V–) – 0.1 V < V_{CM} < (V+) – 1.4 V T_A = –40°C to 125°C		95		dB
		V_S = 5.5 V, (V–) – 0.1 V < V_{CM} < (V+) + 0.1 V T_A = –40°C to 125°C	63	77		dB
		V_S = 2.5 V, (V–) – 0.1 V < V_{CM} < (V+)+ 0.1 V T_A = –40°C to 125°C		68		dB
INPUT BIAS CURRENT						
I_B	Input bias current	Vs = 5 V		±10		pA
I_{OS}	Input offset current			±3		pA
NOISE						
E_n	Input voltage noise (peak-to-peak)	*f* = 0.1 Hz to 10 Hz, Vs = 5 V		5.1		$µV_{PP}$
e_n	Input voltage noise density	*f* = 1 kHz, Vs = 5 V		33		nV/√Hz
		f = 10 kHz, Vs = 5 V		30		nV/√Hz
i_n	Input current noise density	*f* = 1 kHz, Vs = 5 V		25		fA/√Hz
INPUT CAPACITANCE						
C_{ID}	Differential			1.5		pF
C_{IC}	Common-mode			5		pF
OPEN-LOOP GAIN						
A_{OL}	Open-loop voltage gain	V_S = 5.5 V, (V–) + 0.05 V < V_O < (V+) – 0.05 V, R_L = 10 kΩ	100	115		dB
		V_S = 2.5 V, (V–) + 0.04 V < V_O < (V+) – 0.04 V, R_L = 10 kΩ		98		dB
		V_S = 2.5 V, (V–) + 0.1 V < V_O < (V+) – 0.1 V, R_L = 2 kΩ		112		dB
		V_S = 5.5 V, (V–) + 0.15 V < V_O < (V+) – 0.15 V, R_L = 2 kΩ		128		dB
FREQUENCY RESPONSE						
GBW	Gain-bandwidth product	Vs = 5 V		1		MHz
φ_m	Phase margin	V_S = 5.5 V, G = 1		76		degrees
SR	Slew rate	Vs = 5 V		1.7		V/µs
t_S	Settling time	To 0.1%, V_S = 5 V, 2-V Step , G = +1, C_L = 100 pF		3		µs
		To 0.01%, V_S = 5 V, 2-V Step , G = +1, C_L = 100 pF		4		µs
t_{OR}	Overload recovery time	V_S = 5 V, V_{IN} × gain > V_S		0.9		µs
THD+N	Total harmonic distortion + noise	V_S = 5.5 V, V_{CM} = 2.5 V, V_O = 1 V_{RMS}, G = +1, f = 1 kHz, 80 kHz measurement BW		0.005		%
OUTPUT						
V_O	Voltage output swing from supply rails	V_S = 5.5 V, R_L = 10 kΩ		20	50	mV
		V_S = 5.5 V, R_L = 2 kΩ		40	75	mV
I_{SC}	Short-circuit current	Vs = 5.5 V		±40		mA
Z_O	Open-loop output impedance	Vs = 5 V, f = 1 MHz		1200		Ω
POWER SUPPLY						
V_S	Specified voltage range		2.5 (±1.25)		5.5 (±2.75)	V
I_Q	Quiescent current per amplifier	I_O = 0 mA, V_S = 5.5 V		70	125	µA
		I_O = 0 mA, V_S = 5.5 V, T_A = –40°C to 125°C			150	µA
	Power-on time	V_S = 0 V to 5 V, to 90% I_Q level		50		µs

Copyright © 2017–2019, Texas Instruments Incorporated

6.8 Typical Characteristics

at T_A = 25°C, V+ = 2.75 V, V– = –2.75 V, R_L = 10 kΩ connected to V_S / 2, V_{CM} = V_S / 2, and V_{OUT} = V_S / 2 (unless otherwise noted)

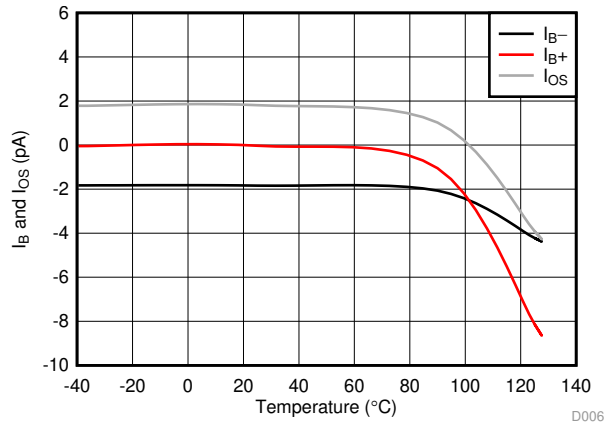

图 1. I_B and I_{OS} vs Temperature

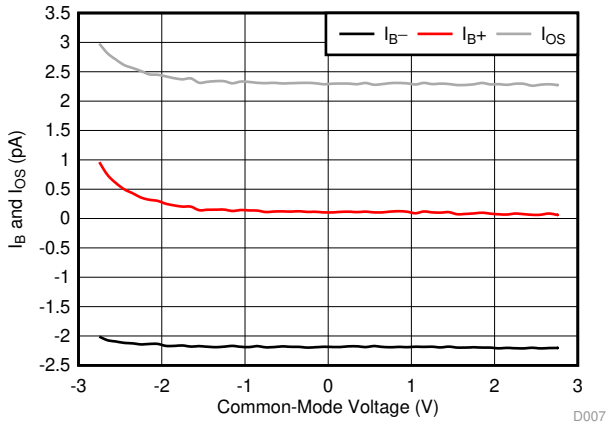

图 2. I_B and I_{OS} vs Common-Mode Voltage

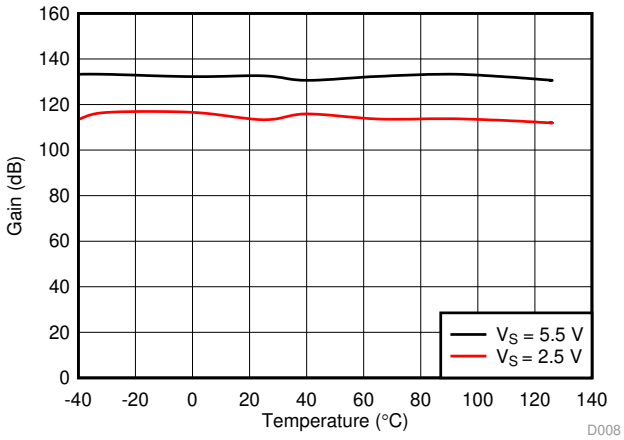

图 3. Open-Loop Gain vs Temperature

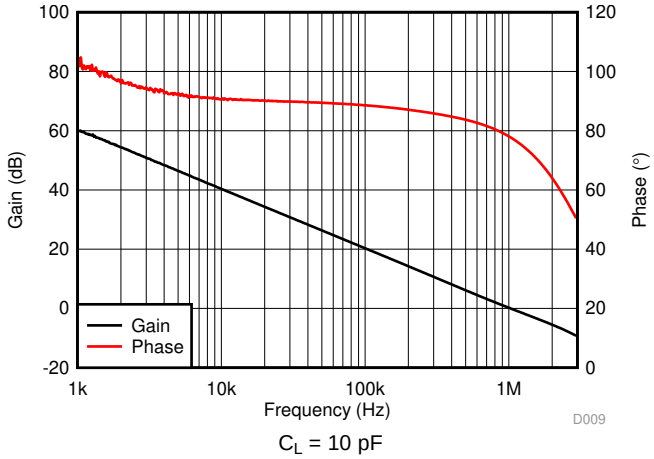

图 4. Open-Loop Gain and Phase vs Frequency

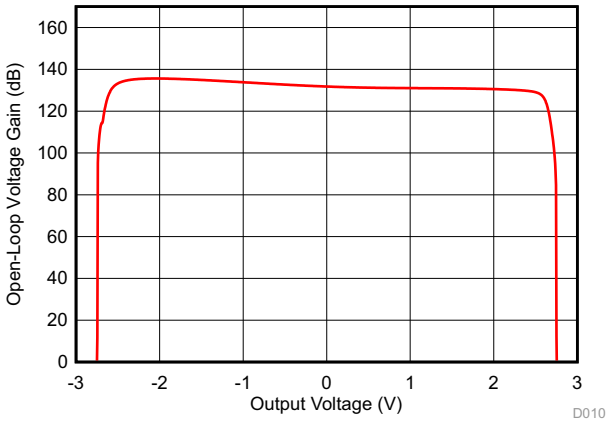

图 5. Open-Loop Gain vs Output Voltage

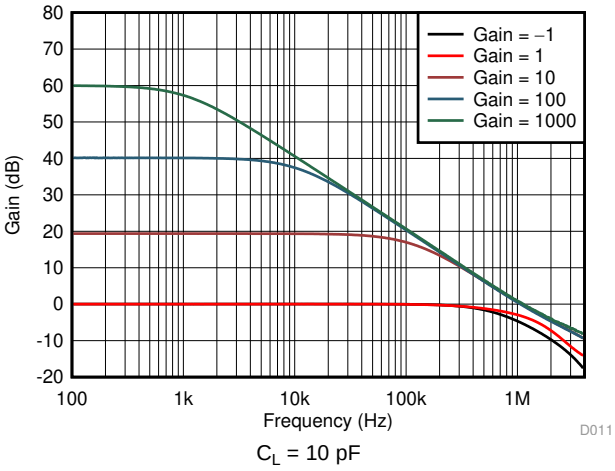

图 6. Closed-Loop Gain vs Frequency

Typical Characteristics (接下页)

at T_A = 25°C, V+ = 2.75 V, V– = –2.75 V, R_L = 10 kΩ connected to V_S / 2, V_{CM} = V_S / 2, and V_{OUT} = V_S / 2 (unless otherwise noted)

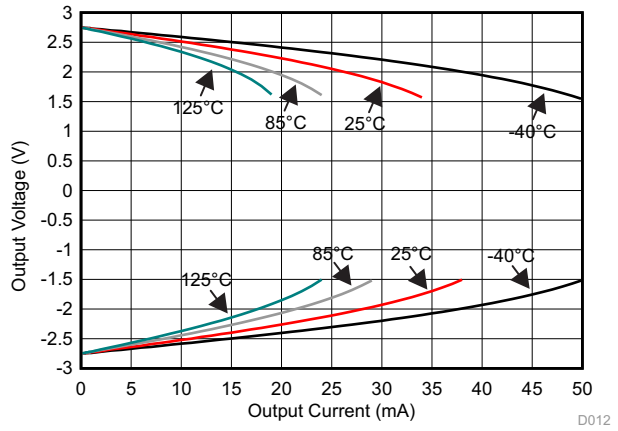

图 7. Output Voltage vs Output Current (Claw)

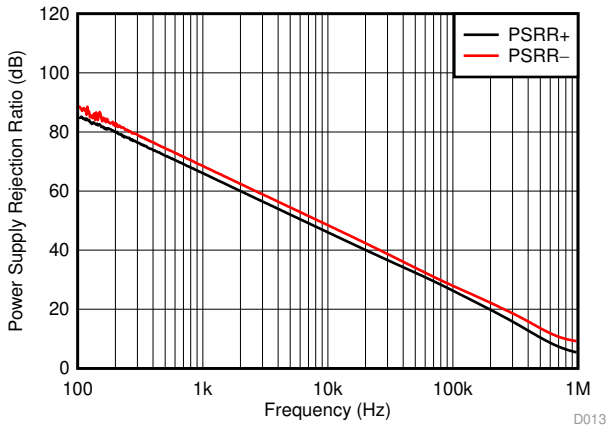

图 8. PSRR vs Frequency

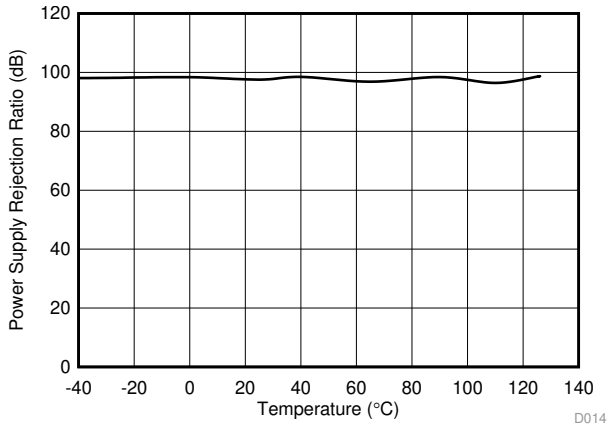

V_S = 1.8 V to 5.5 V

图 9. DC PSRR vs Temperature

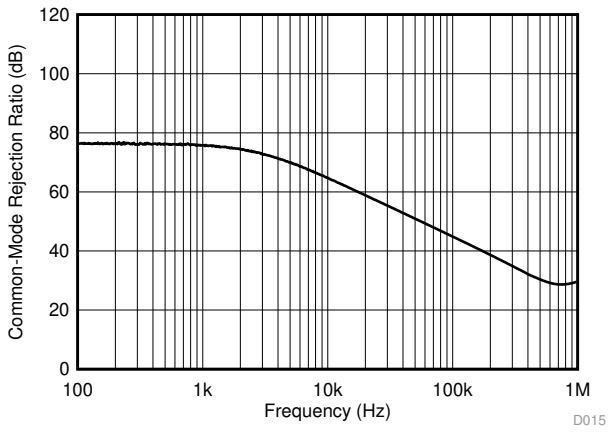

图 10. CMRR vs Frequency

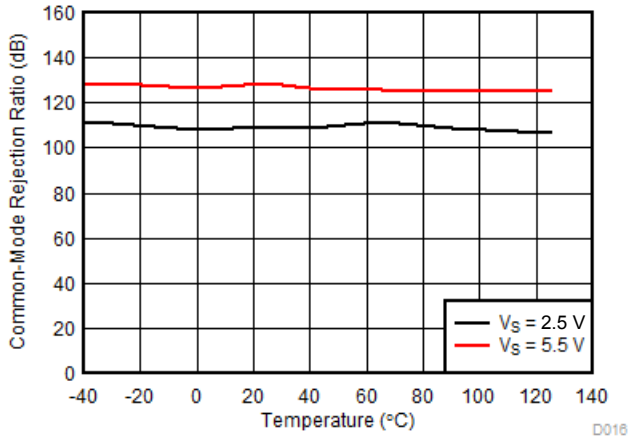

V_{CM} = (V–) – 0.1 V to (V+) – 1.4 V

图 11. DC CMRR vs Temperature

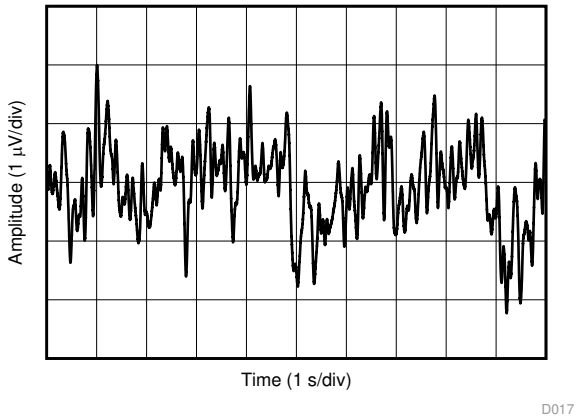

图 12. 0.1 Hz to 10 Hz Integrated Voltage Noise

版权 © 2017–2019, Texas Instruments Incorporated

Typical Characteristics (接下页)

at T_A = 25°C, V+ = 2.75 V, V– = –2.75 V, R_L = 10 kΩ connected to V_S / 2, V_{CM} = V_S / 2, and V_{OUT} = V_S / 2 (unless otherwise noted)

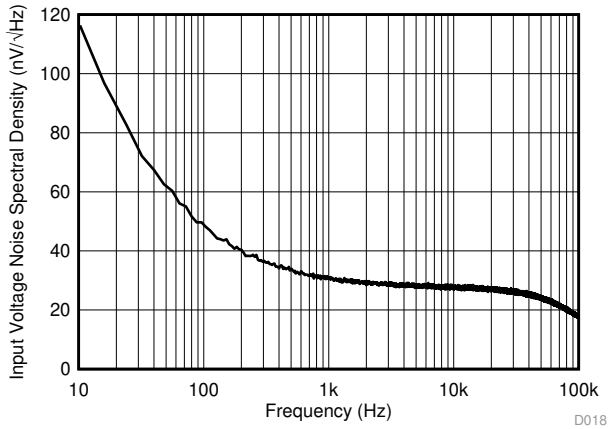

图 13. Input Voltage Noise Spectral Density

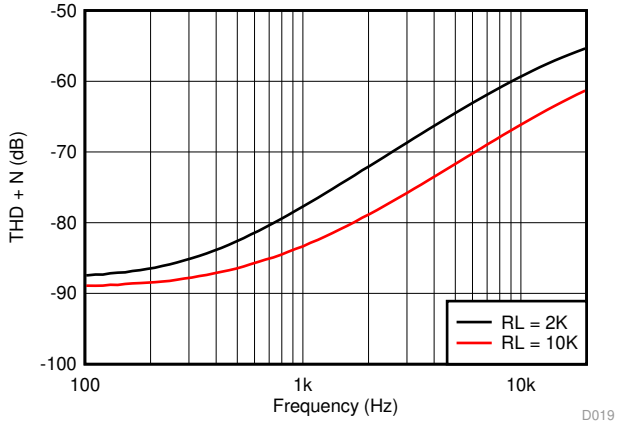

V_S = 5.5 V, V_{CM} = 2.5 V, G = 1, BW = 80 kHz, V_{OUT} = 0.5 V_{RMS}

图 14. THD + N vs Frequency

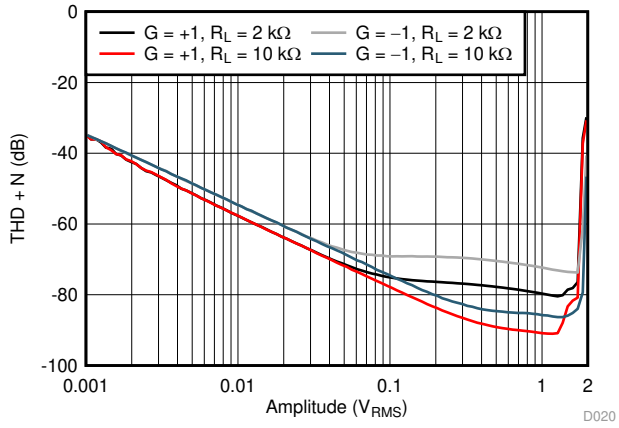

V_S = 5.5 V, V_{CM} = 2.5 V, f = 1 kHz, G = 1, BW = 80 kHz

图 15. THD + N vs Amplitude

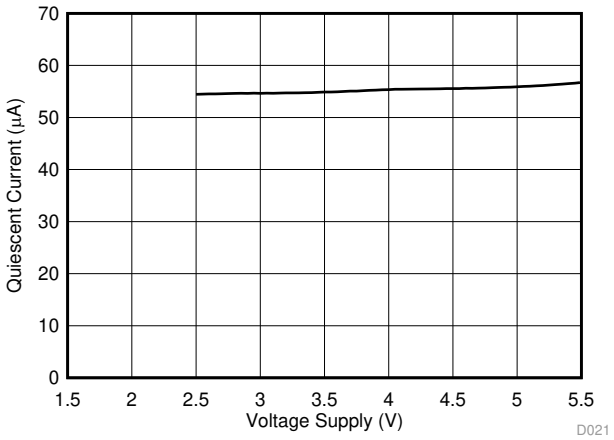

图 16. Quiescent Current vs Supply Voltage

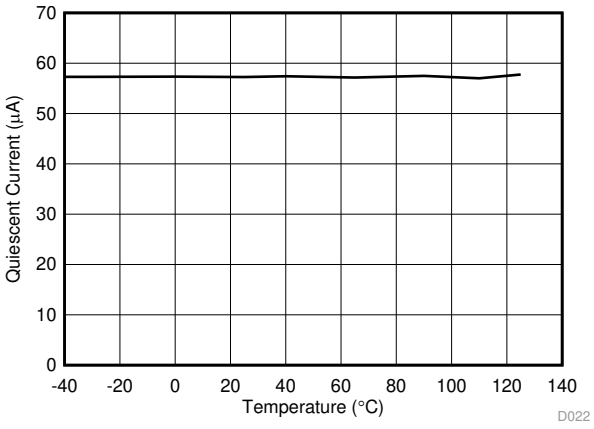

图 17. Quiescent Current vs Temperature

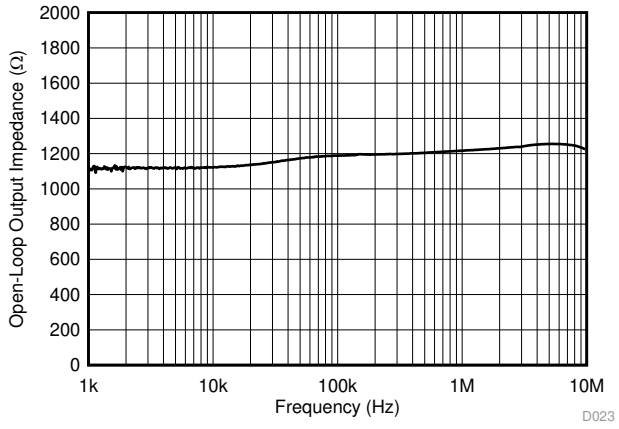

图 18. Open-Loop Output Impedance vs Frequency

Typical Characteristics (接下页)

at T_A = 25°C, V+ = 2.75 V, V– = –2.75 V, R_L = 10 kΩ connected to V_S / 2, V_{CM} = V_S / 2, and V_{OUT} = V_S / 2 (unless otherwise noted)

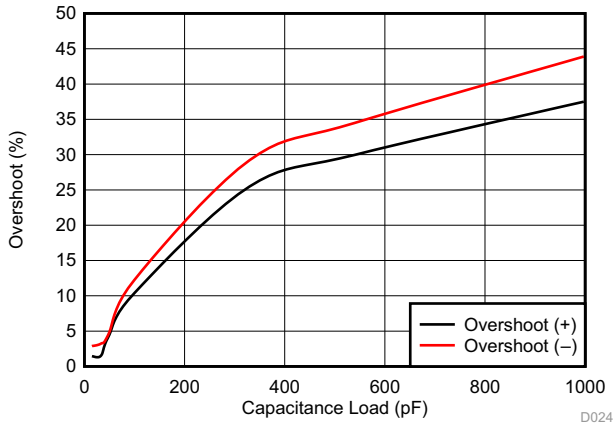

G = 1, V_{IN} = 100 mVpp

图 19. Small Signal Overshoot vs Capacitive Load

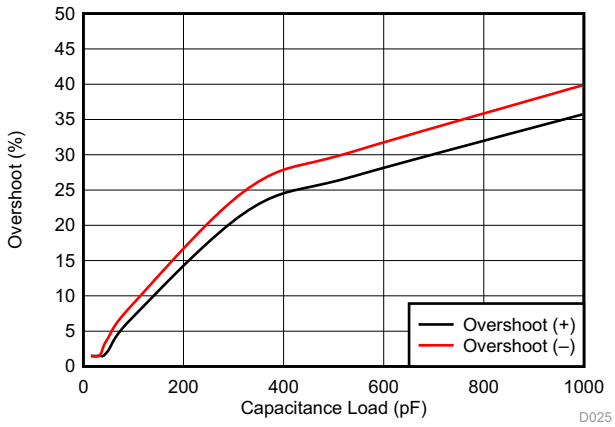

G = –1, V_{IN} = 100 mVpp

图 20. Small Signal Overshoot vs Capacitive Load

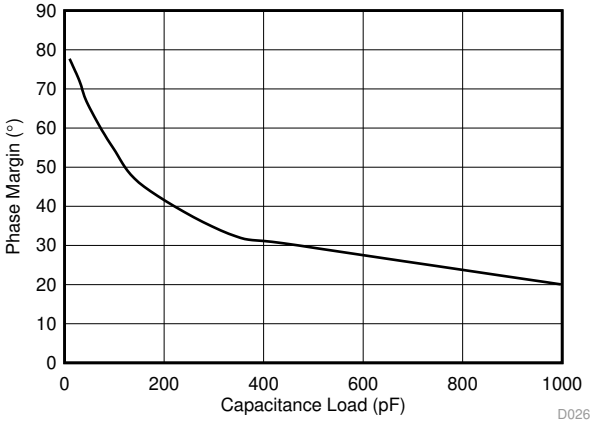

图 21. Phase Margin vs Capacitive Load

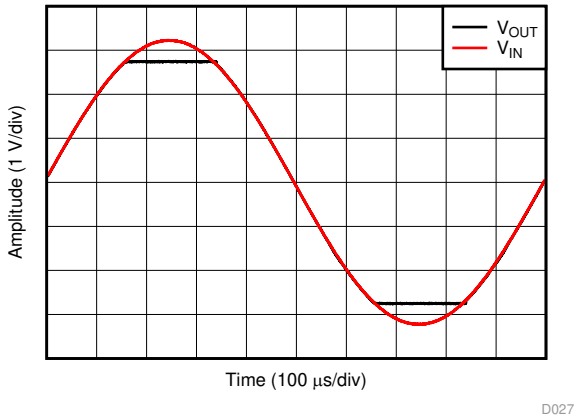

G = 1, V_{IN} = 6.5 V_{PP}

图 22. No Phase Reversal

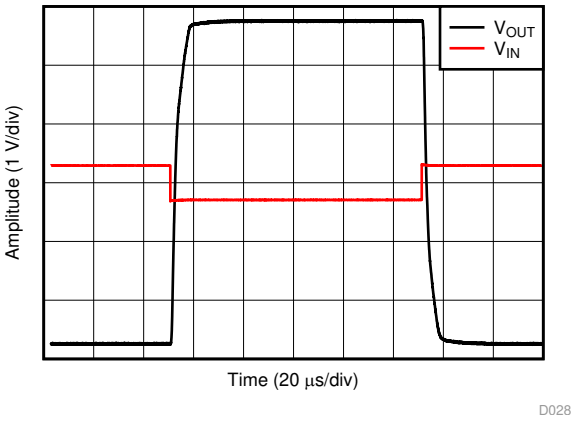

G = –10, V_{IN} = 600 mV_{PP}

图 23. Overload Recovery

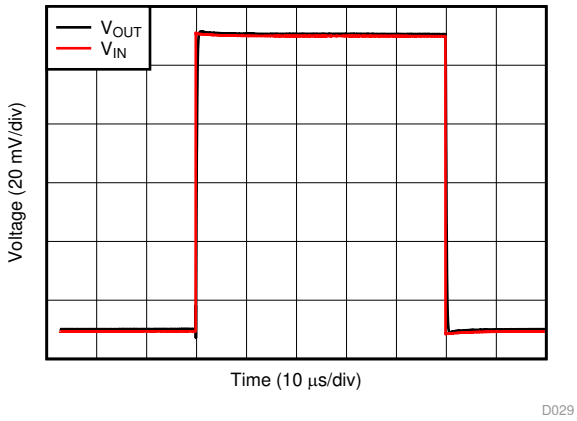

G = 1, V_{IN} = 100 mV_{PP} , C_L = 10 pF

图 24. Small-Signal Step Response

版权 © 2017–2019, Texas Instruments Incorporated

Typical Characteristics (接下页)

at T_A = 25°C, V+ = 2.75 V, V– = –2.75 V, R_L = 10 kΩ connected to V_S / 2, V_{CM} = V_S / 2, and V_{OUT} = V_S / 2 (unless otherwise noted)

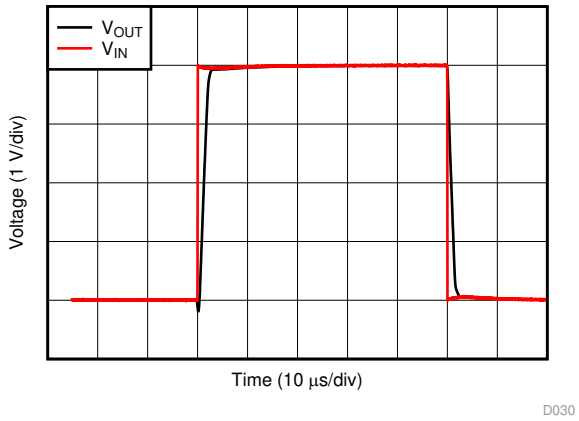

G = 1, V_{IN} = 4 V_{PP} , C_L = 10 pF

图 25. Large-Signal Step Response

G = 1, C_L = 100 pF, 2-V step

图 26. Large-Signal Settling Time (Negative)

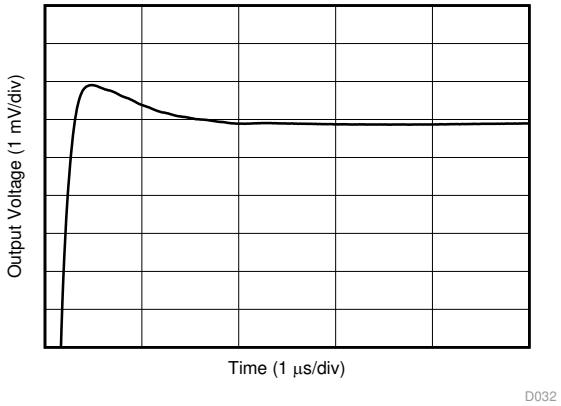

G = 1, C_L = 100 pF, 2-V step

图 27. Large-Signal Settling Time (Positive)

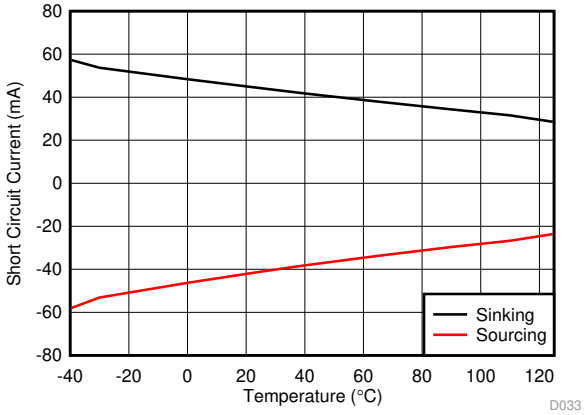

图 28. Short-Circuit Current vs Temperature

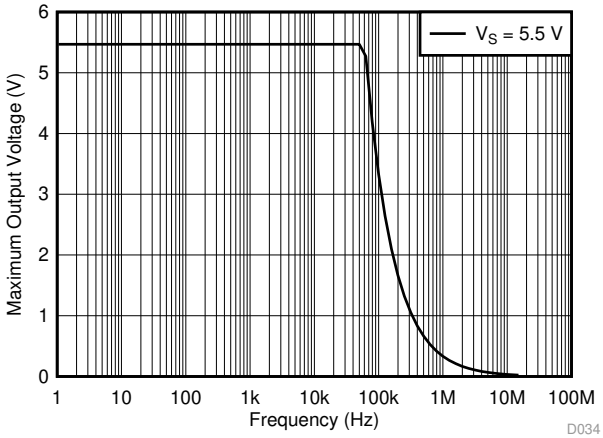

图 29. Maximum Output Voltage vs Frequency

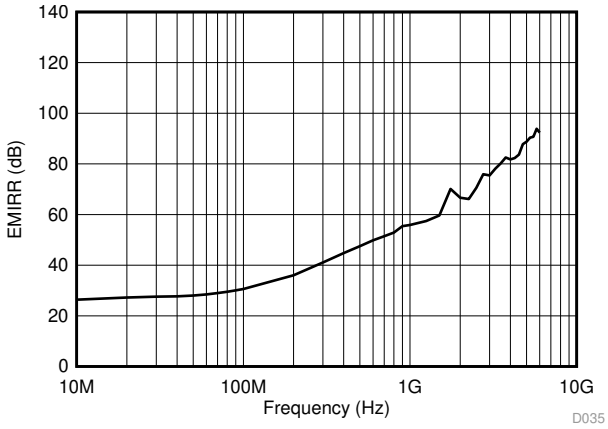

图 30. Electromagnetic Interference Rejection Ratio Referred to Noninverting Input (EMIRR+) vs Frequency

Typical Characteristics (接下页)

at T_A = 25°C, V+ = 2.75 V, V– = –2.75 V, R_L = 10 kΩ connected to V_S / 2, V_{CM} = V_S / 2, and V_{OUT} = V_S / 2 (unless otherwise noted)

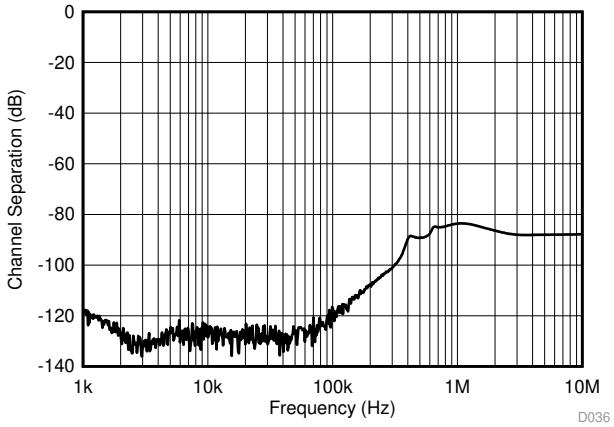

图 31. Channel Separation

版权 © 2017–2019, Texas Instruments Incorporated

7 Detailed Description

7.1 Overview

The LMV3xxA is a family of low-power, rail-to-rail output op amps. These devices operate from 2.5 V to 5.5 V, are unity-gain stable, and are designed for a wide range of general-purpose applications. The input common-mode voltage range includes the negative rail and allows the LMV3xxA family to be used in many single-supply applications. Rail-to-rail output swing significantly increases dynamic range, especially in low-supply applications, and makes them suitable for driving sampling analog-to-digital converters (ADCs).

7.2 Functional Block Diagram

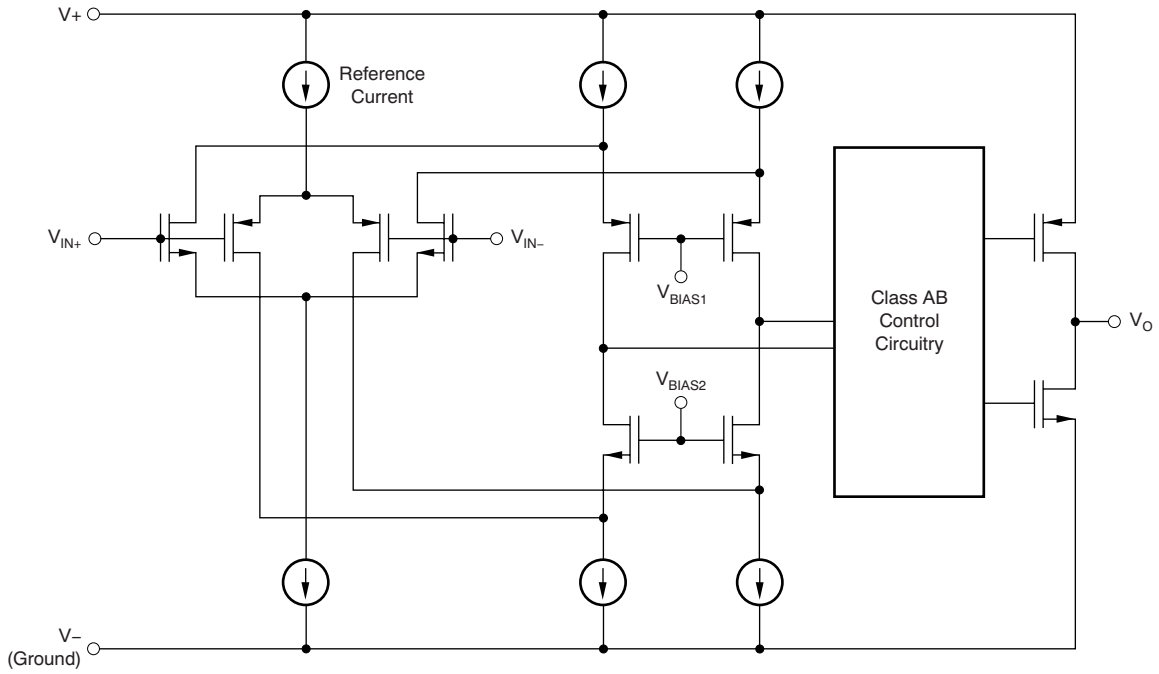

7.3 Feature Description

7.3.1 Operating Voltage

The LMV3xxA family of op amps are for operation from 2.5 V to 5.5 V. In addition, many specifications such as input offset voltage, quiescent current, offset current, and short circuit current apply from –40°C to 125°C. Parameters that vary significantly with operating voltages or temperature are shown in the *Typical Characteristics* section.

7.3.2 Input Common Mode Range

The input common-mode voltage range of the LMV3xxA family extends 100 mV beyond the negative supply rail and within 1 V below the positive rail for the full supply voltage range of 2.5 V to 5.5 V. This performance is achieved with a P-channel differential pair, as shown in the *Functional Block Diagram*. Additionally, a complementary N-channel differential pair has been included in parallel to eliminate issues with phase reversal that are common with previous generations of op amps. However, the N-channel pair is not optimized for operation. TI recommends limiting any voltages applied at the inputs to less than V_{CC}– 1V to ensure that the op amp conforms to the specifications detailed in the *Electrical Characteristics* table.

7.3.3 Rail-to-Rail Output

Designed as a low-power, low-voltage operational amplifier, the LMV3xxA family delivers a robust output drive capability. A class-AB output stage with common-source transistors achieves full rail-to-rail output swing capability. For resistive loads of 10 kΩ, the output swings to within 20 mV of either supply rail, regardless of the applied power-supply voltage. Different load conditions change the ability of the amplifier to swing close to the rails.

7.3.4 Overload Recovery

Overload recovery is defined as the time required for the operational amplifier output to recover from a saturated state to a linear state. The output devices of the operational amplifier enter a saturation region when the output voltage exceeds the rated operating voltage, because of the high input voltage or the high gain. After the device enters the saturation region, the charge carriers in the output devices require time to return to the linear state. After the charge carriers return to the linear state, the device begins to slew at the specified slew rate. Therefore, the propagation delay (in case of an overload condition) is the sum of the overload recovery time and the slew time. The overload recovery time for the LMV3xxA family is approximately 850 ns.

7.4 Device Functional Modes

The LMV3xxA family has a single functional mode. The devices are powered on as long as the power-supply voltage is between 2.5 V (±1.25 V) and 5.5 V (±2.75 V).

版权 © 2017–2019, Texas Instruments Incorporated

8 Application and Implementation

注

Information in the following applications sections is not part of the TI component specification, and TI does not warrant its accuracy or completeness. TI's customers are responsible for determining suitability of components for their purposes. Customers should validate and test their design implementation to confirm system functionality.

8.1 Application Information

The LMV3xxA family of low-power, rail-to-rail output operational amplifiers is specifically designed for portable applications. The devices operate from 2.5 V to 5.5 V, are unity-gain stable, and are suitable for a wide range of general-purpose applications. The class AB output stage is capable of driving less than or equal to 10-kΩ loads connected to any point between V+ and V–. The input common-mode voltage range includes the negative rail, and allows the LMV3xxA devices to be used in many single-supply applications.

8.2 Typical Application

8.2.1 LMV3xxA Low-Side, Current Sensing Application

图 32 shows the LMV3xxA configured in a low-side current sensing application.

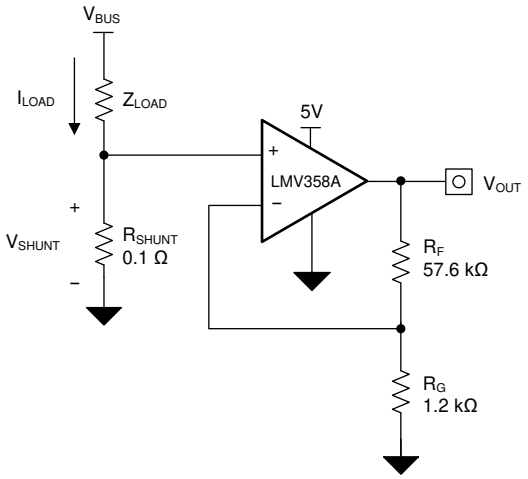

图 32. LMV3xxA in a Low-Side, Current-Sensing Application

Typical Application (接下页)

8.2.1.1 Design Requirements

The design requirements for this design are:

- Load current: 0 A to 1 A
- Output voltage: 4.9 V
- Maximum shunt voltage: 100 mV

8.2.1.2 Detailed Design Procedure

The transfer function of the circuit in is given in 公式 1:

$$V_{OUT} = I_{LOAD} \times R_{SHUNT} \times Gain \tag{1}$$

The load current (I_{LOAD}) produces a voltage drop across the shunt resistor (R_{SHUNT}). The load current is set from 0 A to 1 A. To keep the shunt voltage below 100 mV at maximum load current, the largest shunt resistor is shown using 公式 2:

$$R_{SHUNT} = \frac{V_{SHUNT_MAX}}{I_{LOAD_MAX}} = \frac{100mV}{1A} = 100m\Omega \tag{2}$$

Using 公式 2, R_{SHUNT} is calculated to be 100 mΩ. The voltage drop produced by I_{LOAD} and R_{SHUNT} is amplified by the LMV3xxA to produce an output voltage of approximately 0 V to 4.9 V. The gain needed by the LMV3xxA to produce the necessary output voltage is calculated using 公式 3:

$$Gain = \frac{\left(V_{OUT_MAX} - V_{OUT_MIN}\right)}{\left(V_{IN_MAX} - V_{IN_MIN}\right)} \tag{3}$$

Using 公式 3, the required gain is calculated to be 49 V/V, which is set with resistors R_F and R_G. 公式 4 sizes the resistors R_F and R_G, to set the gain of the LMV3xxA to 49 V/V.

$$Gain = 1 + \frac{\left(R_F\right)}{\left(R_G\right)} \tag{4}$$

Selecting R_F as 57.6 kΩ and R_G as 1.2 kΩ provides a combination that equals 49 V/V. 图 33 shows the measured transfer function of the circuit shown in 图 32. Notice that the gain is only a function of the feedback and gain resistors. This gain is adjusted by varying the ratio of the resistors and the actual resistors values are determined by the impedance levels that the designer wants to establish. The impedance level determines the current drain, the effect that stray capacitance has, and a few other behaviors. There is no optimal impedance selection that works for every system, you must choose an impedance that is ideal for your system parameters.

8.2.1.3 Application Curve

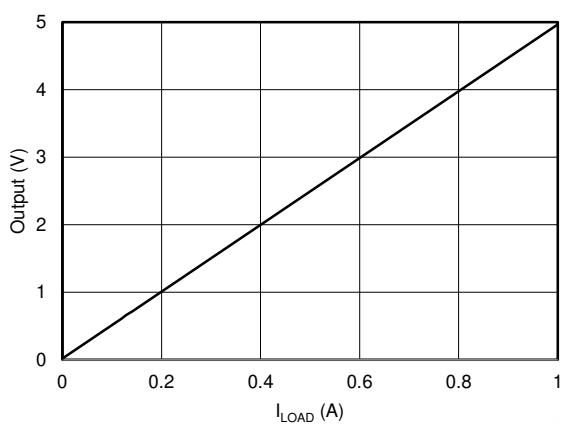

图 33. Low-Side, Current-Sense Transfer Function

版权 © 2017–2019, Texas Instruments Incorporated

Typical Application (接下页)

8.2.2 Single-Supply Photodiode Amplifier

Photodiodes are used in many applications to convert light signals to electrical signals. The current through the photodiode is proportional to the photon energy absorbed, and is commonly in the range of a few hundred picoamps to a few tens of microamps. An amplifier in a transimpedance configuration is typically used to convert the low-level photodiode current to a voltage signal for processing in an MCU. The circuit shown in 图 34 is an example of a single-supply photodiode amplifier circuit using the LMV358A.

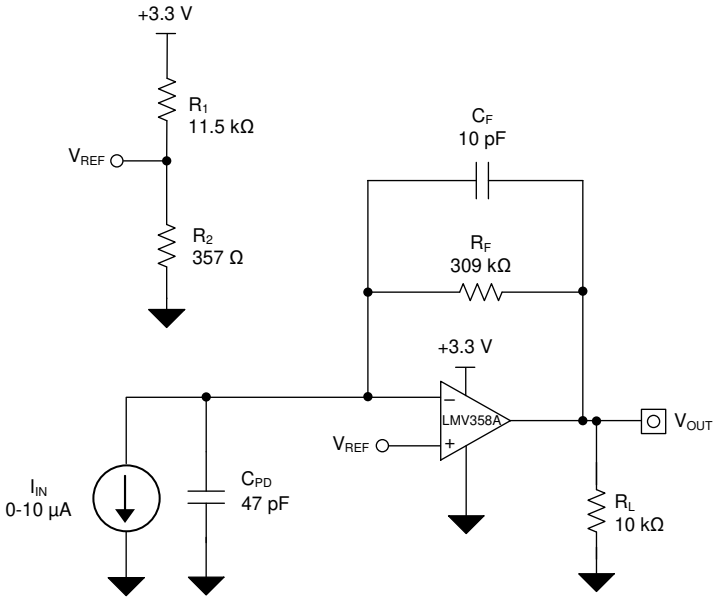

图 34. Single-Supply Photodiode Amplifier Circuit

Typical Application (接下页)

8.2.2.1 Design Requirements

The design requirements for this design are:

- Supply voltage: 3.3 V
- Input: 0 µA to 10 µA
- Output: 0.1 V to 3.2 V
- Bandwidth: 50 kHz

8.2.2.2 Detailed Design Procedure

The transfer function between the output voltage (V_{OUT}), the input current, (I_{IN}) and the reference voltage (V_{REF}) is defined in 公式 5.

$$V_{OUT} = I_{IN} \times R_F + V_{REF} \tag{5}$$

Where:

$$V_{REF} = V_+ \times \left(\frac{R_1 \times R_2}{R_1 + R_2}\right) \tag{6}$$

Set V_{REF} to 100 mV to meet the minimum output voltage level by setting R1 and R2 to meet the required ratio calculated in 公式 7.

$$\frac{V_{REF}}{V_+} = \frac{0.1\ \text{V}}{3.3\ \text{V}} = 0.0303 \tag{7}$$

The closest resistor ratio to meet this ratio sets R1 to 11.5 kΩ and R2 to 357 Ω.

The required feedback resistance can be calculated based on the input current and desired output voltage.

$$R_F = \frac{V_{OUT} - V_{REF}}{I_{IN}} = \frac{3.2\ \text{V} - 0.1\ \text{V}}{10\ \mu\text{A}} = 310\frac{\text{kV}}{\text{A}} \approx 309\ \text{k}\Omega \tag{8}$$

Calculate the value for the feedback capacitor based on R_F and the desired –3-dB bandwidth, (f_{-3dB}) using 公式 9.

$$C_F = \frac{1}{2 \times \pi \times R_F \times f_{-3dB}} = \frac{1}{2 \times \pi \times 309\ \text{k}\Omega \times 50\ \text{kHz}} = 10.3\ \text{pF} \approx 10\ \text{pF} \tag{9}$$

The minimum op amp bandwidth required for this application is based on the value of R_F, C_F, and the capacitance on the INx– pin of the LMV358A which is equal to the sum of the photodiode shunt capacitance, (CPD) the common-mode input capacitance, (CCM) and the differential input capacitance (CD) as 公式 10 shows.

$$C_{IN} = C_{PD} + C_{CM} + C_D = 47\ \text{pF} + 5\ \text{pF} + 1\ \text{pF} = 53\ \text{pF} \tag{10}$$

The minimum op amp bandwidth is calculated in 公式 11.

$$f_{=BGW} \geq \frac{C_{IN} + C_F}{2 \times \pi \times R_F \times C_F{}^2} \geq 324\ \text{kHz} \tag{11}$$

The 1-MHz bandwidth of the LMV3xxA meets the minimum bandwidth requirement and remains stable in this application configuration.

版权 © 2017–2019, Texas Instruments Incorporated

Typical Application (接下页)

8.2.2.3 Application Curves

The measured current-to-voltage transfer function for the photodiode amplifier circuit is shown in 图 35. The measured performance of the photodiode amplifier circuit is shown in 图 36.

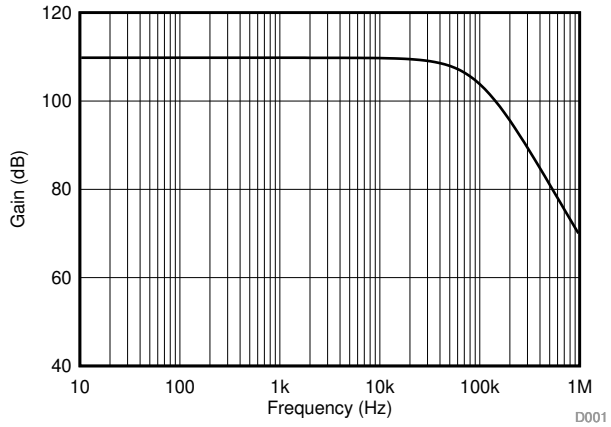

图 35. Photodiode Amplifier Circuit AC Gain Results

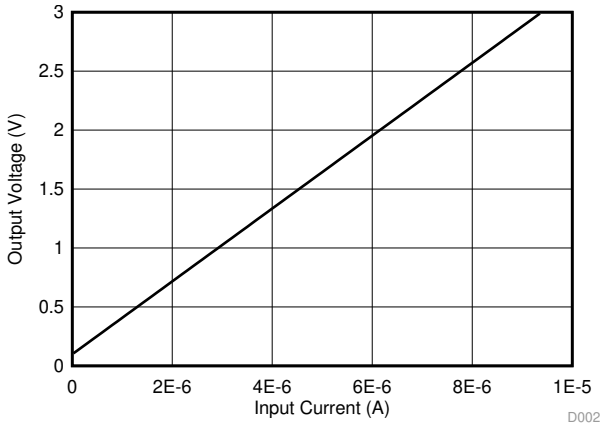

图 36. Photodiode Amplifier Circuit DC Results

9 Power Supply Recommendations

The LMV3xxA family is specified for operation from 2.5 V to 5.5 V (±1.25 V to ±2.75 V); many specifications apply from –40°C to 125°C. The *Typical Characteristics* section presents parameters that may exhibit significant variance with regard to operating voltage or temperature.

CAUTION

Supply voltages larger than 6 V may permanently damage the device; see the *Absolute Maximum Ratings* table.

Place 0.1-µF bypass capacitors close to the power-supply pins to reduce coupling errors from noisy or high-impedance power supplies. For more detailed information on bypass capacitor placement, see the *Layout Guidelines* section.

9.1 Input and ESD Protection

The LMV3xxA family incorporates internal ESD protection circuits on all pins. For input and output pins, this protection primarily consists of current-steering diodes connected between the input and power-supply pins. These ESD protection diodes provide in-circuit, input overdrive protection, as long as the current is limited to 10 mA. 图 37 shows how a series input resistor can be added to the driven input to limit the input current. The added resistor contributes thermal noise at the amplifier input and the value must be kept to a minimum in noise-sensitive applications.

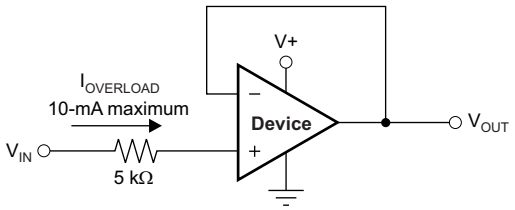

图 37. Input Current Protection

版权 © 2017–2019, Texas Instruments Incorporated

10 Layout

10.1 Layout Guidelines

For best operational performance of the device, use good printed circuit board (PCB) layout practices, including:

- Noise can propagate into analog circuitry through the power connections of the board and propagate to the power pins of the op amp itself. Bypass capacitors are used to reduce the coupled noise by providing a low-impedance path to ground.
  - Connect low-ESR, 0.1-µF ceramic bypass capacitors between each supply pin and ground, placed as close to the device as possible. A single bypass capacitor from V+ to ground is adequate for single-supply applications.
- Separate grounding for analog and digital portions of circuitry is one of the simplest and most effective methods of noise suppression. One or more layers on multilayer PCBs are usually devoted to ground planes. A ground plane helps distribute heat and reduces electromagnetic interference (EMI) noise pickup. Take care to physically separate digital and analog grounds, paying attention to the flow of the ground current. For more detailed information, see *Circuit Board Layout Techniques*.
- To reduce parasitic coupling, run the input traces as far away from the supply or output traces as possible. If these traces cannot be kept separate, crossing the sensitive trace at a 90 degree angle is much better as opposed to running the traces in parallel with the noisy trace.
- Place the external components as close to the device as possible, as shown in 图 39. Keeping R_F and R_G close to the inverting input minimizes parasitic capacitance.
- Keep the length of input traces as short as possible. Remember that the input traces are the most sensitive part of the circuit.
- Consider a driven, low-impedance guard ring around the critical traces. A guard ring may significantly reduce leakage currents from nearby traces that are at different potentials.
- Cleaning the PCB following board assembly is recommended for best performance.
- Any precision integrated circuit can experience performance shifts resulting from moisture ingress into the plastic package. Following any aqueous PCB cleaning process, baking the PCB assembly is recommended to remove moisture introduced into the device packaging during the cleaning process. A low-temperature, post-cleaning bake at 85°C for 30 minutes is sufficient for most circumstances.

10.2 Layout Example

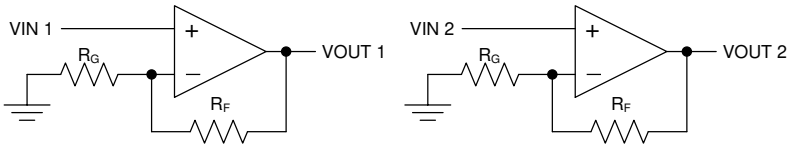

图 38. Schematic Representation for 图 39

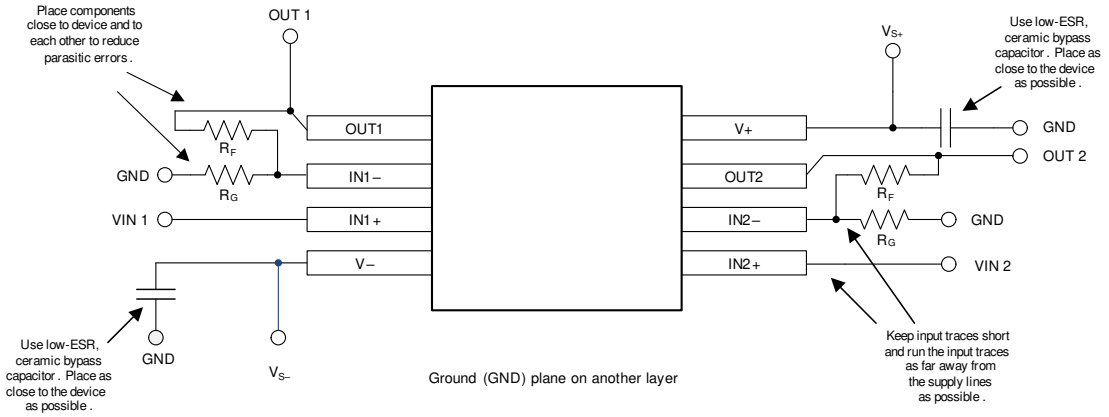

图 39. Layout Example

11 器件和文档支持

11.1 文档支持

11.1.1 相关文档

请参阅如下相关文档：

- 德州仪器 (TI)，*《运算放大器的 EMI 抑制比》*

11.2 相关链接

下表列出了快速访问链接。类别包括技术文档、支持和社区资源、工具和软件，以及立即订购快速访问。

表 1. 相关链接

器件	产品文件夹	立即订购	技术文档	工具与软件	支持和社区
LMV321A	请单击此处	请单击此处	请单击此处	请单击此处	请单击此处
LMV358A	请单击此处	请单击此处	请单击此处	请单击此处	请单击此处
LMV324A	请单击此处	请单击此处	请单击此处	请单击此处	请单击此处

11.3 接收文档更新通知

要接收文档更新通知，请导航至 ti.com. 上的器件产品文件夹。单击右上角的*通知我*进行注册，即可每周接收产品信息更改摘要。有关更改的详细信息，请查看任何已修订文档中包含的修订历史记录。

11.4 社区资源

TI E2E™ support forums are an engineer's go-to source for fast, verified answers and design help — straight from the experts. Search existing answers or ask your own question to get the quick design help you need.

Linked content is provided "AS IS" by the respective contributors. They do not constitute TI specifications and do not necessarily reflect TI's views; see TI's Terms of Use.

11.5 商标

E2E is a trademark of Texas Instruments.
All other trademarks are the property of their respective owners.

11.6 静电放电警告

ESD 可能会损坏该集成电路。德州仪器 (TI) 建议通过适当的预防措施处理所有集成电路。如果不遵守正确的处理措施和安装程序，可能会损坏集成电路。

ESD 的损坏小至导致微小的性能降级，大至整个器件故障。 精密的集成电路可能更容易受到损坏，这是因为非常细微的参数更改都可能会导致器件与其发布的规格不相符。

11.7 Glossary

SLYZ022 — *TI Glossary*.

This glossary lists and explains terms, acronyms, and definitions.

12 机械、封装和可订购信息

以下页面包含机械、封装和可订购信息。这些信息是指定器件的最新可用数据。数据如有变更，恕不另行通知，且不会对此文档进行修订。如需获取此数据表的浏览器版本，请查看左侧的导航面板。

版权 © 2017–2019, Texas Instruments Incorporated

PACKAGING INFORMATION

Orderable Device	Status (1)	Package Type	Package Drawing	Pins	Package Qty	Eco Plan (2)	Lead finish/ Ball material (6)	MSL Peak Temp (3)	Op Temp (°C)	Device Marking (4/5)	Samples
LMV321AIDBVR	ACTIVE	SOT-23	DBV	5	3000	RoHS & Green	NIPDAU	Level-1-260C-UNLIM	-40 to 125	1OIF	Samples
LMV321AIDCKR	ACTIVE	SC70	DCK	5	3000	RoHS & Green	SN	Level-2-260C-1 YEAR	-40 to 125	1C2	Samples
LMV321AUIDBVR	ACTIVE	SOT-23	DBV	5	3000	RoHS & Green	NIPDAU	Level-1-260C-UNLIM	-40 to 125	1WOF	Samples
LMV324AIDR	ACTIVE	SOIC	D	14	2500	RoHS & Green	NIPDAU	Level-2-260C-1 YEAR	-40 to 125	LMV324	Samples
LMV324AIDYYR	ACTIVE	SOT-23-THIN	DYY	14	3000	RoHS & Green	NIPDAU	Level-1-260C-UNLIM	-40 to 125	LM324I	Samples
LMV324AIPWR	ACTIVE	TSSOP	PW	14	2000	RoHS & Green	SN	Level-2-260C-1 YEAR	-40 to 125	LMV324A	Samples
LMV358AIDDFR	ACTIVE	SOT-23-THIN	DDF	8	3000	RoHS & Green	NIPDAU	Level-1-260C-UNLIM	-40 to 125	358A	Samples
LMV358AIDGKR	ACTIVE	VSSOP	DGK	8	2500	RoHS & Green	NIPDAUAG	Level-2-260C-1 YEAR	-40 to 125	1MAX	Samples
LMV358AIDGKT	ACTIVE	VSSOP	DGK	8	250	RoHS & Green	NIPDAUAG	Level-2-260C-1 YEAR	-40 to 125	1MAX	Samples
LMV358AIDR	ACTIVE	SOIC	D	8	2500	RoHS & Green	SN	Level-2-260C-1 YEAR	-40 to 125	MV358A	Samples
LMV358AIPWR	ACTIVE	TSSOP	PW	8	2000	RoHS & Green	NIPDAU | SN	Level-2-260C-1 YEAR	-40 to 125	LMV358	Samples

(1) The marketing status values are defined as follows:
ACTIVE: Product device recommended for new designs.
LIFEBUY: TI has announced that the device will be discontinued, and a lifetime-buy period is in effect.
NRND: Not recommended for new designs. Device is in production to support existing customers, but TI does not recommend using this part in a new design.
PREVIEW: Device has been announced but is not in production. Samples may or may not be available.
OBSOLETE: TI has discontinued the production of the device.

(2) **RoHS:** TI defines "RoHS" to mean semiconductor products that are compliant with the current EU RoHS requirements for all 10 RoHS substances, including the requirement that RoHS substance do not exceed 0.1% by weight in homogeneous materials. Where designed to be soldered at high temperatures, "RoHS" products are suitable for use in specified lead-free processes. TI may reference these types of products as "Pb-Free".
RoHS Exempt: TI defines "RoHS Exempt" to mean products that contain lead but are compliant with EU RoHS pursuant to a specific EU RoHS exemption.
Green: TI defines "Green" to mean the content of Chlorine (Cl) and Bromine (Br) based flame retardants meet JS709B low halogen requirements of <=1000ppm threshold. Antimony trioxide based flame retardants must also meet the <=1000ppm threshold requirement.

(3) MSL, Peak Temp. - The Moisture Sensitivity Level rating according to the JEDEC industry standard classifications, and peak solder temperature.

(4) There may be additional marking, which relates to the logo, the lot trace code information, or the environmental category on the device.

(5) Multiple Device Markings will be inside parentheses. Only one Device Marking contained in parentheses and separated by a "~" will appear on a device. If a line is indented then it is a continuation of the previous line and the two combined represent the entire Device Marking for that device.

(6) Lead finish/Ball material - Orderable Devices may have multiple material finish options. Finish options are separated by a vertical ruled line. Lead finish/Ball material values may wrap to two lines if the finish value exceeds the maximum column width.

Important Information and Disclaimer: The information provided on this page represents TI's knowledge and belief as of the date that it is provided. TI bases its knowledge and belief on information provided by third parties, and makes no representation or warranty as to the accuracy of such information. Efforts are underway to better integrate information from third parties. TI has taken and continues to take reasonable steps to provide representative and accurate information but may not have conducted destructive testing or chemical analysis on incoming materials and chemicals. TI and TI suppliers consider certain information to be proprietary, and thus CAS numbers and other limited information may not be available for release.

In no event shall TI's liability arising out of such information exceed the total purchase price of the TI part(s) at issue in this document sold by TI to Customer on an annual basis.

OTHER QUALIFIED VERSIONS OF LMV324A, LMV358A :

- Automotive : LMV324A-Q1, LMV358A-Q1

NOTE: Qualified Version Definitions:

- Automotive - Q100 devices qualified for high-reliability automotive applications targeting zero defects

TAPE AND REEL INFORMATION

REEL DIMENSIONS

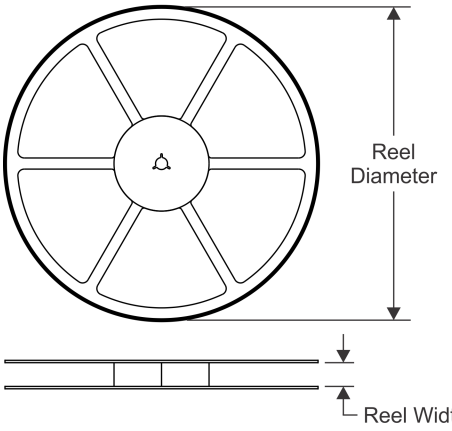

TAPE DIMENSIONS

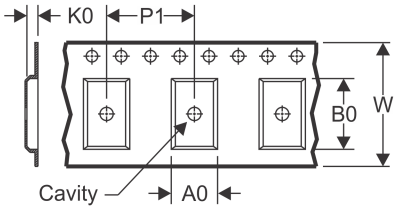

A0	Dimension designed to accommodate the component width
B0	Dimension designed to accommodate the component length
K0	Dimension designed to accommodate the component thickness
W	Overall width of the carrier tape
P1	Pitch between successive cavity centers

QUADRANT ASSIGNMENTS FOR PIN 1 ORIENTATION IN TAPE

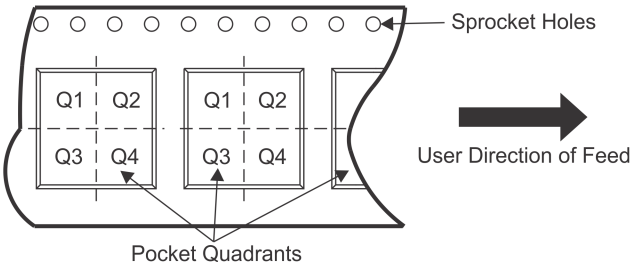

*All dimensions are nominal

Device	Package Type	Package Drawing	Pins	SPQ	Reel Diameter (mm)	Reel Width W1 (mm)	A0 (mm)	B0 (mm)	K0 (mm)	P1 (mm)	W (mm)	Pin1 Quadrant
LMV321AIDBVR	SOT-23	DBV	5	3000	180.0	8.4	3.2	3.2	1.4	4.0	8.0	Q3
LMV321AIDCKR	SC70	DCK	5	3000	178.0	9.0	2.4	2.5	1.2	4.0	8.0	Q3
LMV321AUIDBVR	SOT-23	DBV	5	3000	180.0	8.4	3.2	3.2	1.4	4.0	8.0	Q3
LMV324AIDR	SOIC	D	14	2500	330.0	16.4	6.5	9.0	2.1	8.0	16.0	Q1
LMV324AIDR	SOIC	D	14	2500	330.0	15.4	6.4	5.2	2.1	8.0	12.0	Q1
LMV324AIDYYR	SOT-23-THIN	DYY	14	3000	330.0	12.4	4.8	3.6	1.6	8.0	12.0	Q3
LMV324AIPWR	TSSOP	PW	14	2000	330.0	12.4	6.9	5.6	1.6	8.0	12.0	Q1
LMV358AIDDFR	SOT-23-THIN	DDF	8	3000	180.0	8.4	3.2	3.2	1.4	4.0	8.0	Q3
LMV358AIDGKR	VSSOP	DGK	8	2500	330.0	12.4	5.3	3.4	1.4	8.0	12.0	Q1
LMV358AIDGKT	VSSOP	DGK	8	250	330.0	12.4	5.3	3.4	1.4	8.0	12.0	Q1
LMV358AIDR	SOIC	D	8	2500	330.0	15.4	6.4	5.2	2.1	8.0	12.0	Q1
LMV358AIPWR	TSSOP	PW	8	2000	330.0	12.4	7.0	3.6	1.6	8.0	12.0	Q1
LMV358AIPWR	TSSOP	PW	8	2000	330.0	12.4	7.0	3.6	1.6	8.0	12.0	Q1

TAPE AND REEL BOX DIMENSIONS

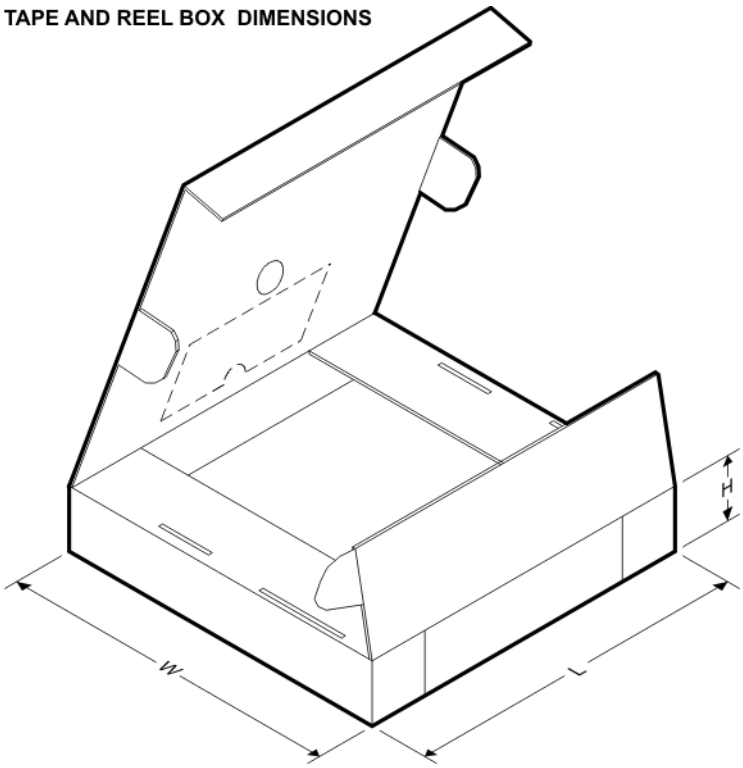

*All dimensions are nominal

Device	Package Type	Package Drawing	Pins	SPQ	Length (mm)	Width (mm)	Height (mm)
LMV321AIDBVR	SOT-23	DBV	5	3000	210.0	185.0	35.0
LMV321AIDCKR	SC70	DCK	5	3000	190.0	190.0	30.0
LMV321AUIDBVR	SOT-23	DBV	5	3000	210.0	185.0	35.0
LMV324AIDR	SOIC	D	14	2500	853.0	449.0	35.0
LMV324AIDR	SOIC	D	14	2500	336.6	336.6	41.3
LMV324AIDYYR	SOT-23-THIN	DYY	14	3000	336.6	336.6	31.8
LMV324AIPWR	TSSOP	PW	14	2000	366.0	364.0	50.0
LMV358AIDDFR	SOT-23-THIN	DDF	8	3000	210.0	185.0	35.0
LMV358AIDGKR	VSSOP	DGK	8	2500	366.0	364.0	50.0
LMV358AIDGKT	VSSOP	DGK	8	250	366.0	364.0	50.0
LMV358AIDR	SOIC	D	8	2500	336.6	336.6	41.3
LMV358AIPWR	TSSOP	PW	8	2000	366.0	364.0	50.0
LMV358AIPWR	TSSOP	PW	8	2000	853.0	449.0	35.0

D (R–PDSO–G14) PLASTIC SMALL OUTLINE

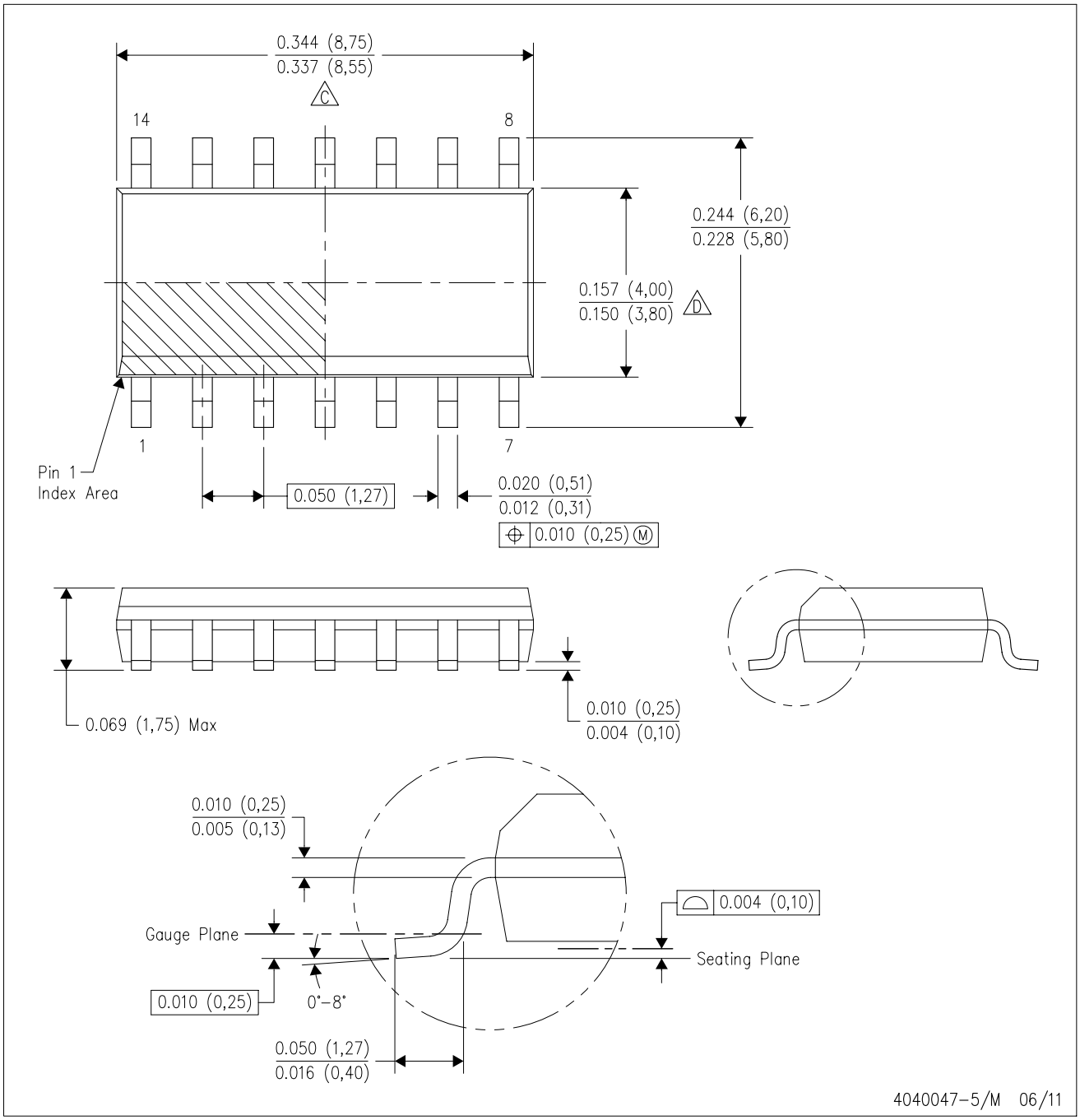

NOTES:
A. All linear dimensions are in inches (millimeters).
B. This drawing is subject to change without notice.
C. Body length does not include mold flash, protrusions, or gate burrs. Mold flash, protrusions, or gate burrs shall not exceed 0.006 (0,15) each side.
D. Body width does not include interlead flash. Interlead flash shall not exceed 0.017 (0,43) each side.
E. Reference JEDEC MS–012 variation AB.

D (R–PDSO–G14) PLASTIC SMALL OUTLINE

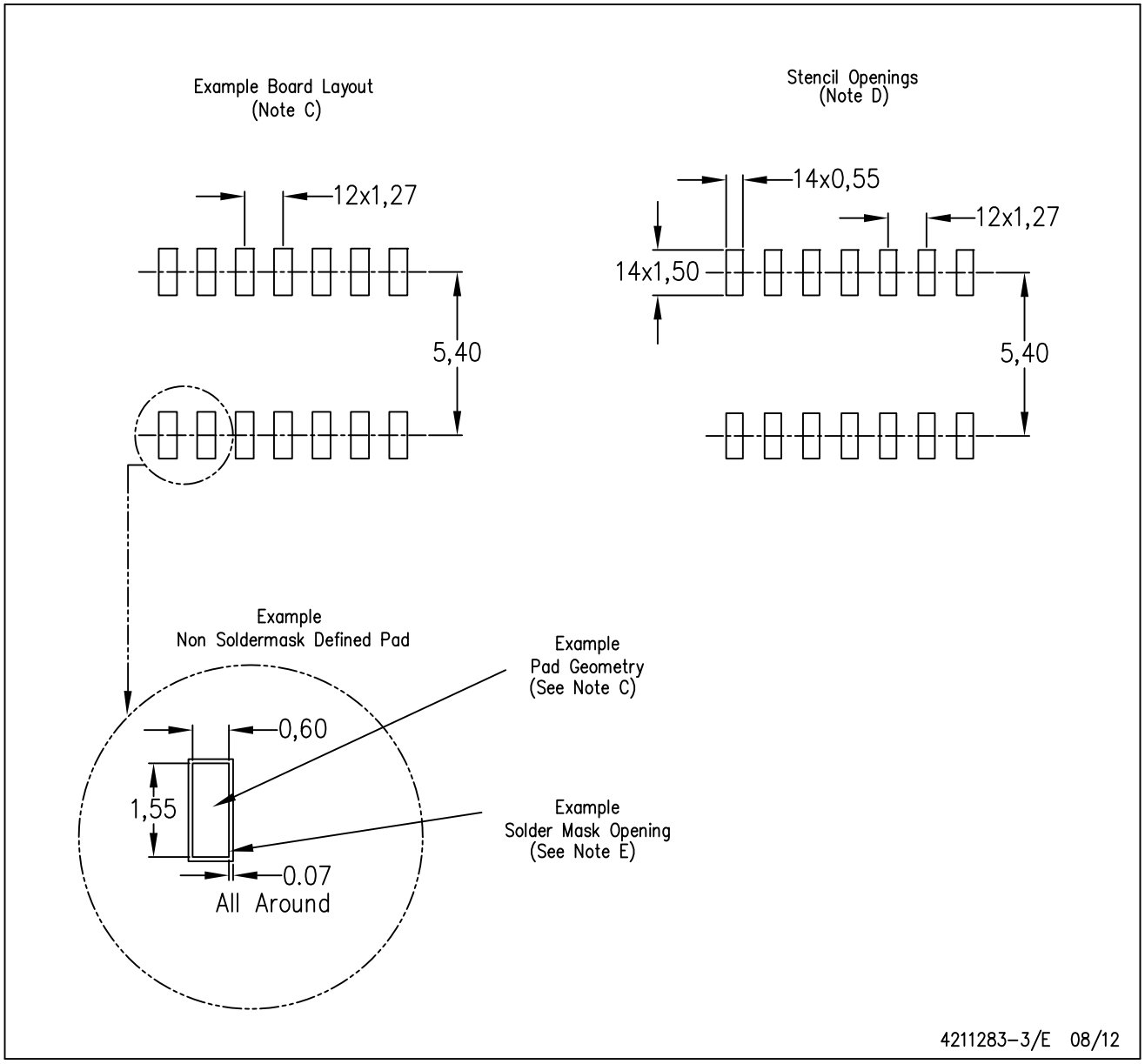

NOTES:
A. All linear dimensions are in millimeters.
B. This drawing is subject to change without notice.
C. Publication IPC–7351 is recommended for alternate designs.
D. Laser cutting apertures with trapezoidal walls and also rounding corners will offer better paste release. Customers should contact their board assembly site for stencil design recommendations. Refer to IPC–7525 for other stencil recommendations.
E. Customers should contact their board fabrication site for solder mask tolerances between and around signal pads.

PW (R–PDSO–G14) PLASTIC SMALL OUTLINE

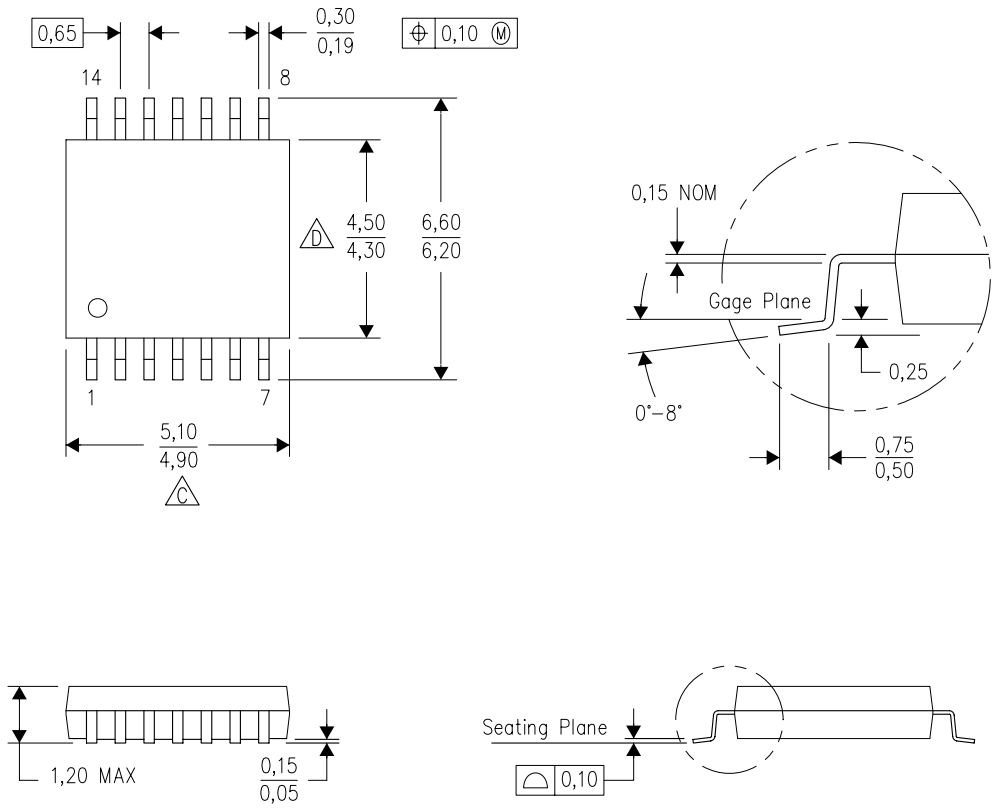

NOTES:
A. All linear dimensions are in millimeters. Dimensioning and tolerancing per ASME Y14.5M–1994.
B. This drawing is subject to change without notice.
C. Body length does not include mold flash, protrusions, or gate burrs. Mold flash, protrusions, or gate burrs shall not exceed 0,15 each side.
D. Body width does not include interlead flash. Interlead flash shall not exceed 0,25 each side.
E. Falls within JEDEC MO–153

PW (R–PDSO–G14) PLASTIC SMALL OUTLINE

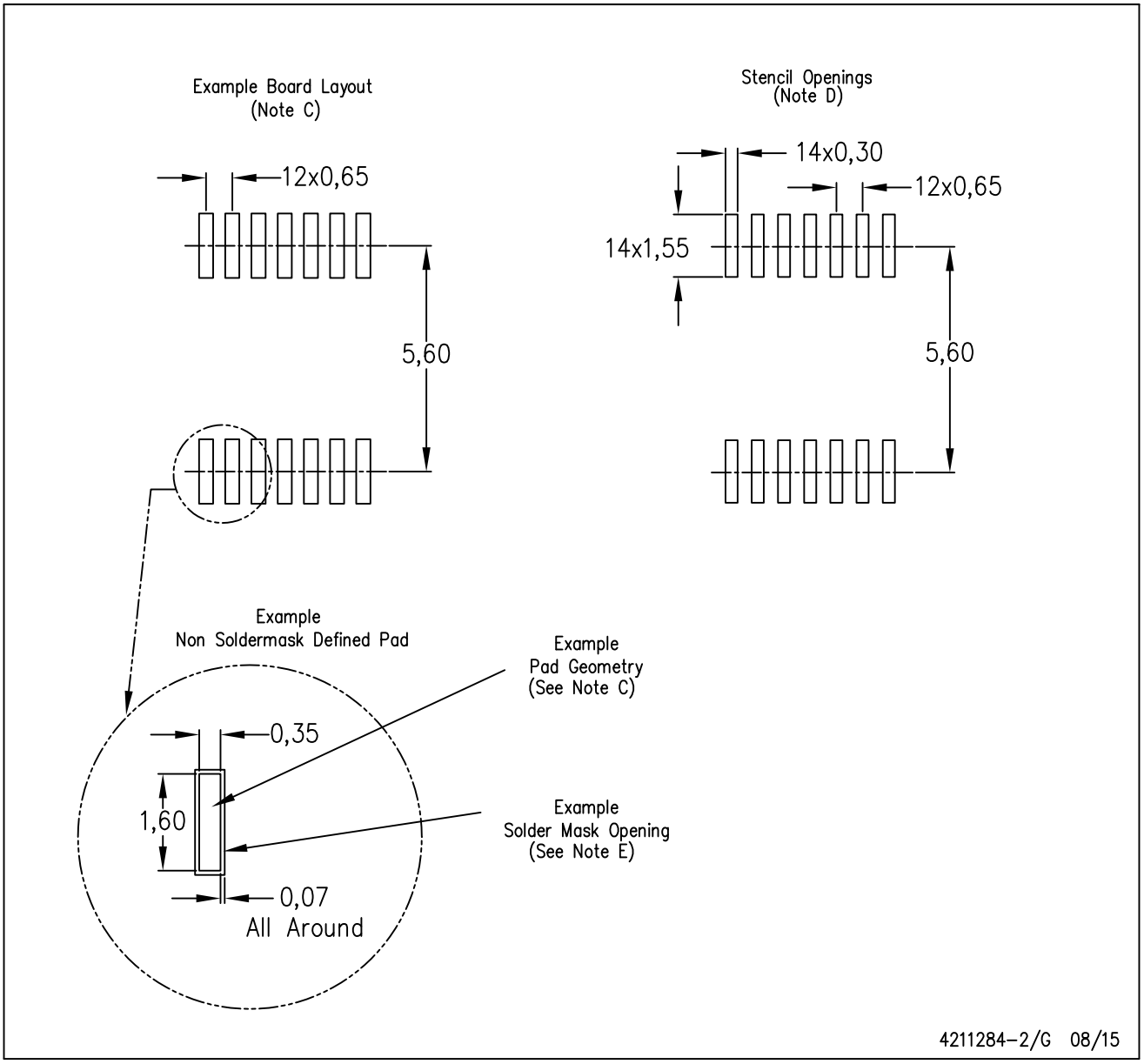

NOTES:
A. All linear dimensions are in millimeters.
B. This drawing is subject to change without notice.
C. Publication IPC–7351 is recommended for alternate designs.
D. Laser cutting apertures with trapezoidal walls and also rounding corners will offer better paste release. Customers should contact their board assembly site for stencil design recommendations. Refer to IPC–7525 for other stencil recommendations.
E. Customers should contact their board fabrication site for solder mask tolerances between and around signal pads.

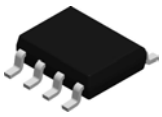

PACKAGE OUTLINE

D0008A

SOIC - 1.75 mm max height

SMALL OUTLINE INTEGRATED CIRCUIT

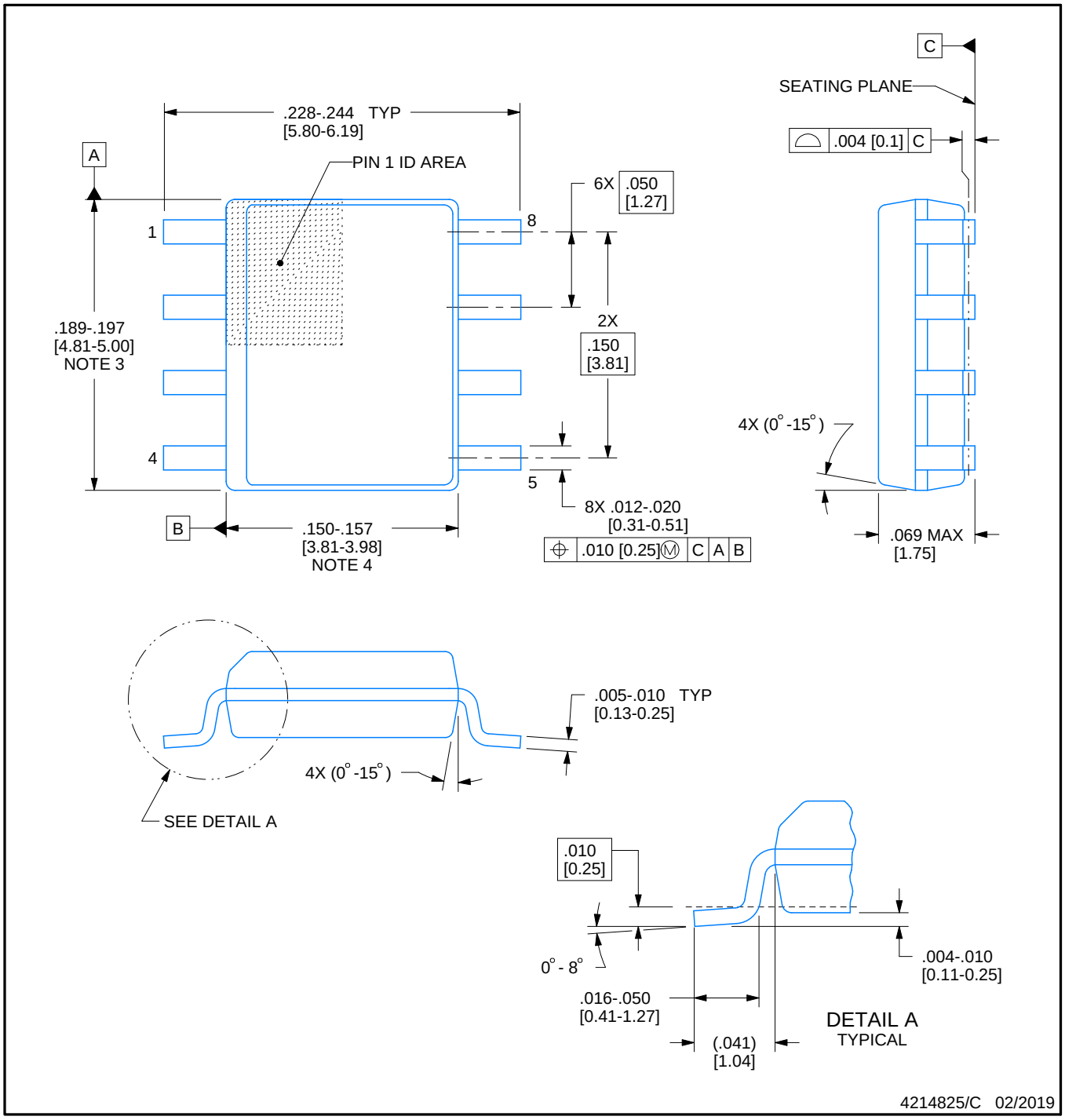

NOTES:

1. Linear dimensions are in inches [millimeters]. Dimensions in parenthesis are for reference only. Controlling dimensions are in inches. Dimensioning and tolerancing per ASME Y14.5M.
2. This drawing is subject to change without notice.
3. This dimension does not include mold flash, protrusions, or gate burrs. Mold flash, protrusions, or gate burrs shall not exceed .006 [0.15] per side.
4. This dimension does not include interlead flash.
5. Reference JEDEC registration MS-012, variation AA.

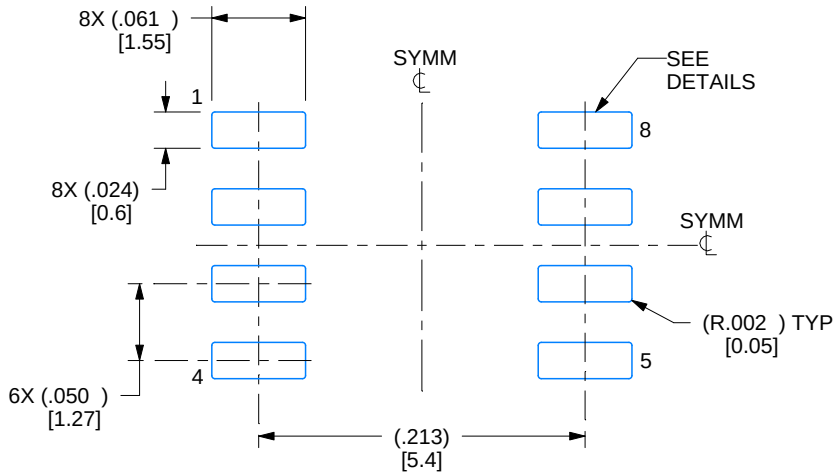

LAND PATTERN EXAMPLE
EXPOSED METAL SHOWN
SCALE:8X

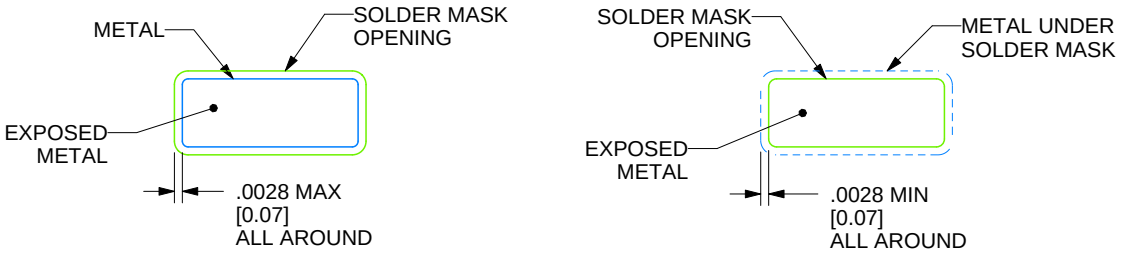

SOLDER MASK DETAILS

4214825/C 02/2019

NOTES: (continued)

6. Publication IPC-7351 may have alternate designs.
7. Solder mask tolerances between and around signal pads can vary based on board fabrication site.

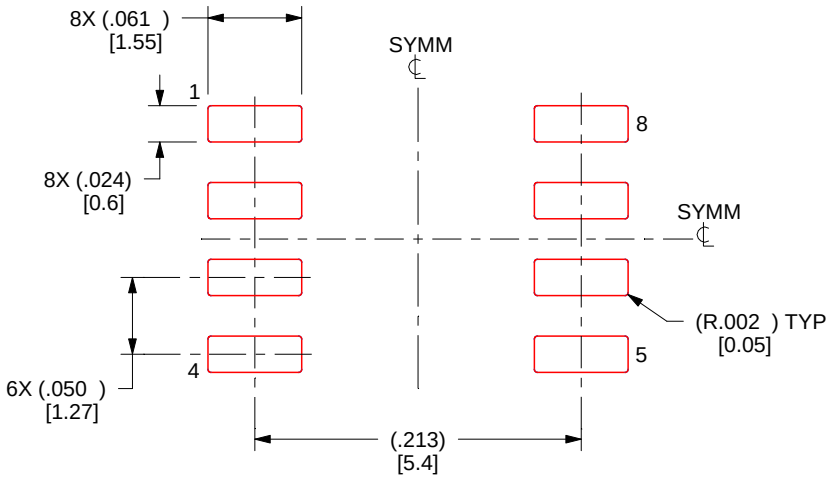

SOLDER PASTE EXAMPLE
BASED ON .005 INCH [0.125 MM] THICK STENCIL
SCALE:8X

4214825/C 02/2019

NOTES: (continued)

8. Laser cutting apertures with trapezoidal walls and rounded corners may offer better paste release. IPC-7525 may have alternate design recommendations.
9. Board assembly site may have different recommendations for stencil design.

DGK (S–PDSO–G8) PLASTIC SMALL–OUTLINE PACKAGE

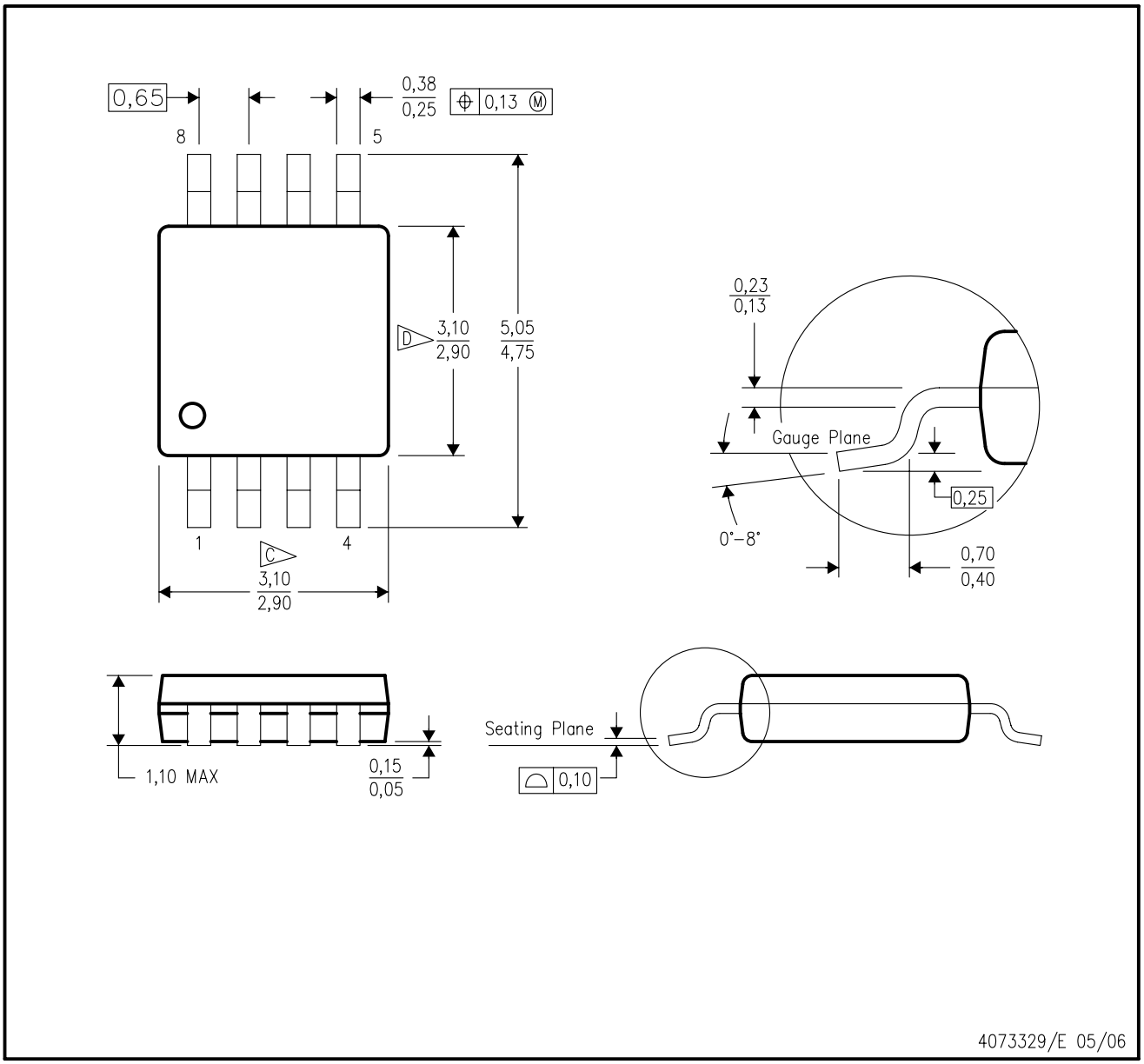

NOTES:
A. All linear dimensions are in millimeters.
B. This drawing is subject to change without notice.
C. Body length does not include mold flash, protrusions, or gate burrs. Mold flash, protrusions, or gate burrs shall not exceed 0.15 per end.
D. Body width does not include interlead flash. Interlead flash shall not exceed 0.50 per side.
E. Falls within JEDEC MO–187 variation AA, except interlead flash.

DGK (S–PDSO–G8) PLASTIC SMALL OUTLINE PACKAGE

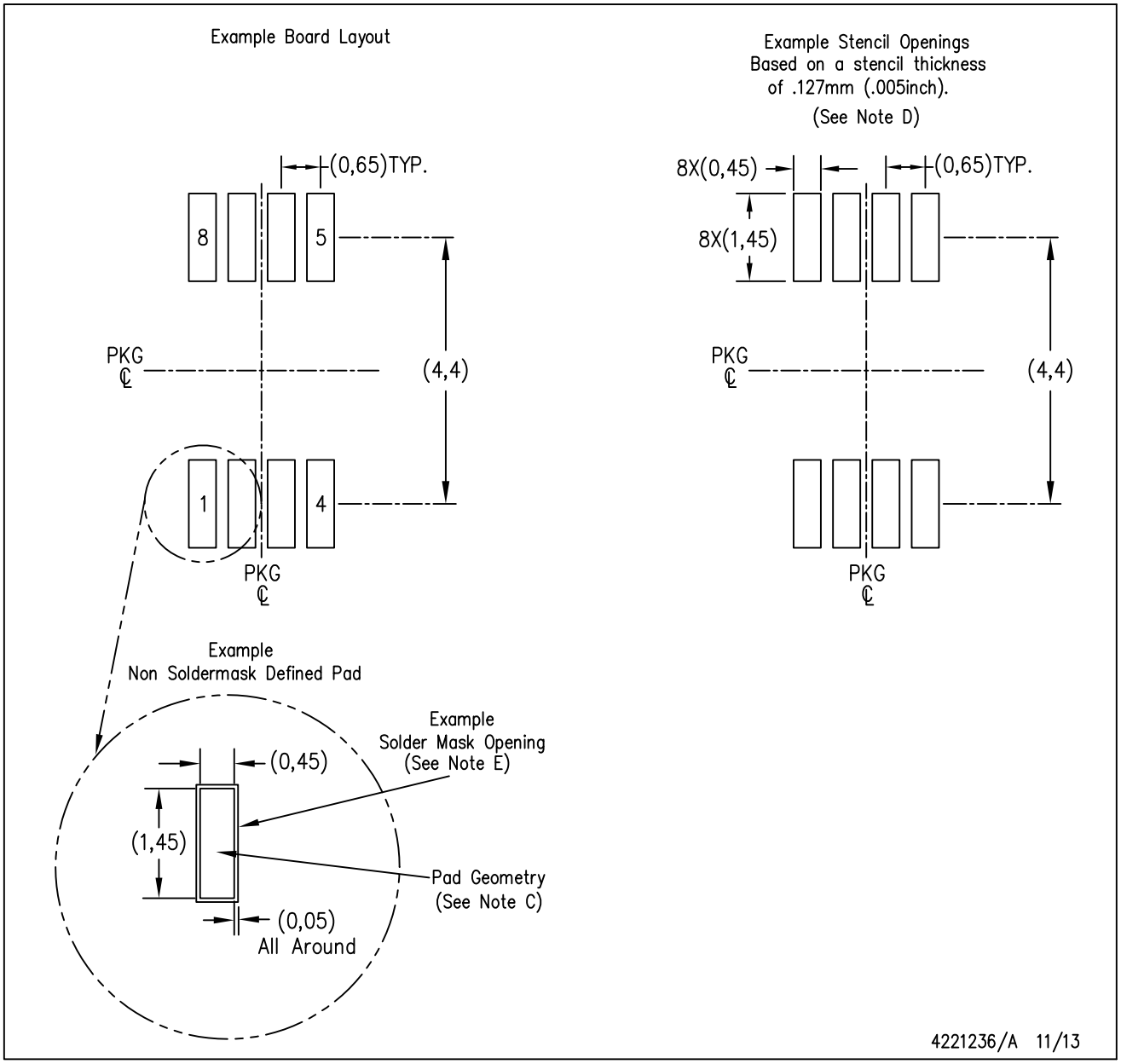

NOTES:
A. All linear dimensions are in millimeters.
B. This drawing is subject to change without notice.
C. Publication IPC–7351 is recommended for alternate designs.
D. Laser cutting apertures with trapezoidal walls and also rounding corners will offer better paste release. Customers should contact their board assembly site for stencil design recommendations. Refer to IPC–7525 for other stencil recommendations.
E. Customers should contact their board fabrication site for solder mask tolerances between and around signal pads.

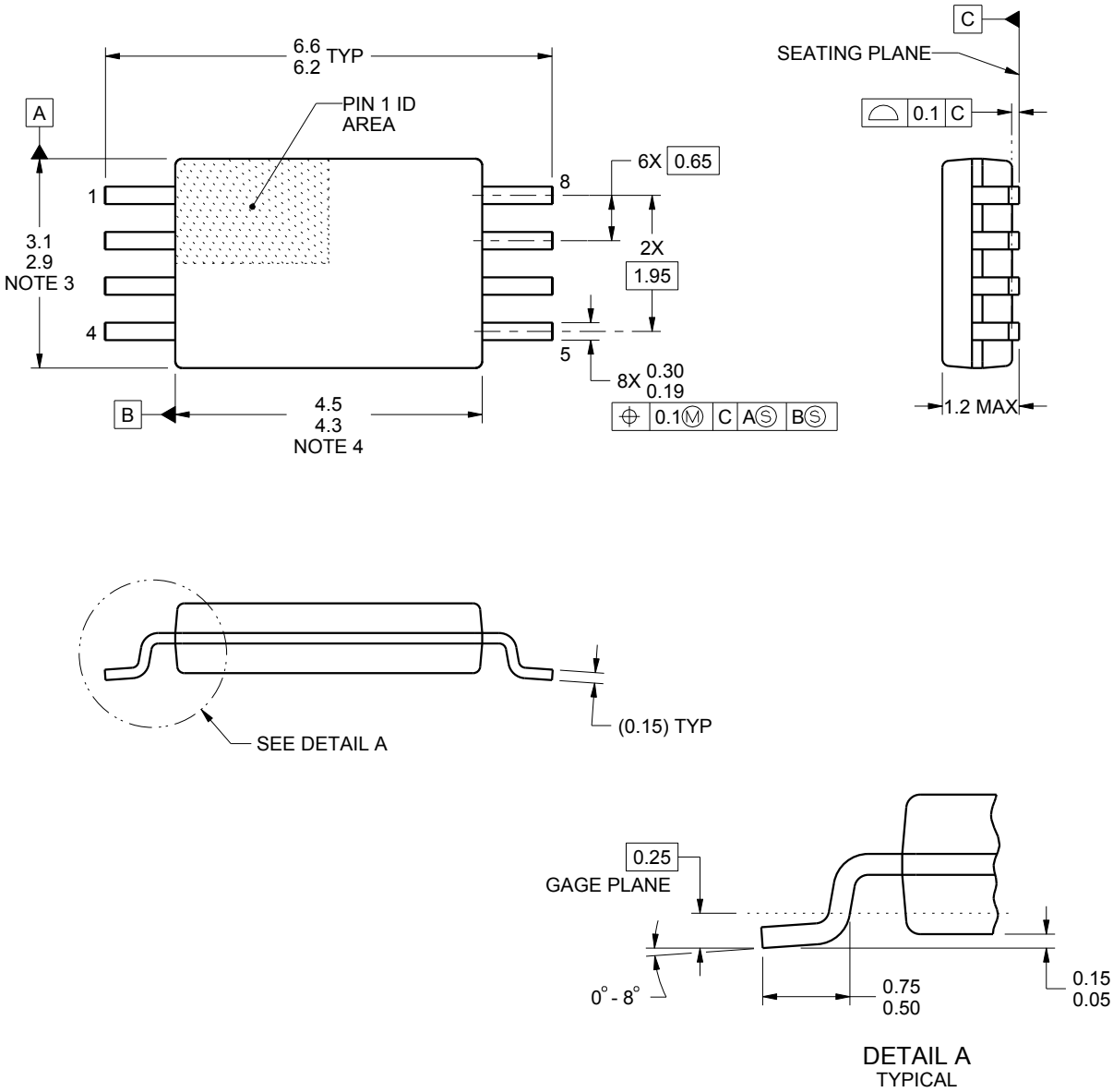

NOTES:

1. All linear dimensions are in millimeters. Any dimensions in parenthesis are for reference only. Dimensioning and tolerancing per ASME Y14.5M.
2. This drawing is subject to change without notice.
3. This dimension does not include mold flash, protrusions, or gate burrs. Mold flash, protrusions, or gate burrs shall not exceed 0.15 mm per side.
4. This dimension does not include interlead flash. Interlead flash shall not exceed 0.25 mm per side.
5. Reference JEDEC registration MO-153, variation AA.

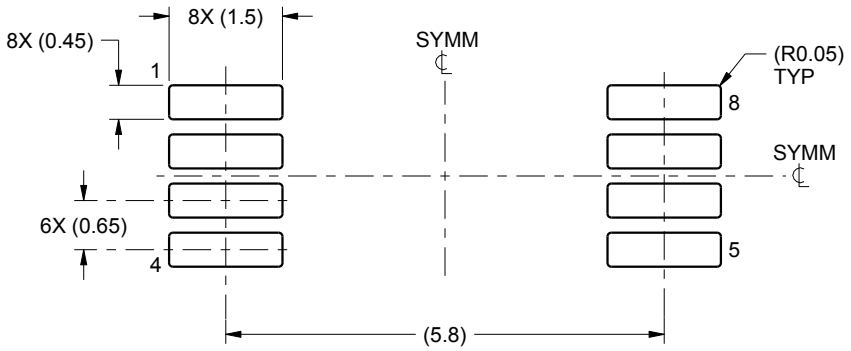

LAND PATTERN EXAMPLE
SCALE:10X

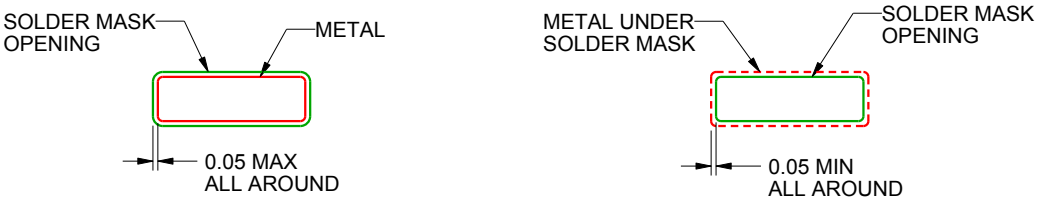

NON SOLDER MASK
DEFINED

SOLDER MASK
DEFINED

SOLDER MASK DETAILS
NOT TO SCALE

4221848/A 02/2015

NOTES: (continued)

6. Publication IPC-7351 may have alternate designs.
7. Solder mask tolerances between and around signal pads can vary based on board fabrication site.

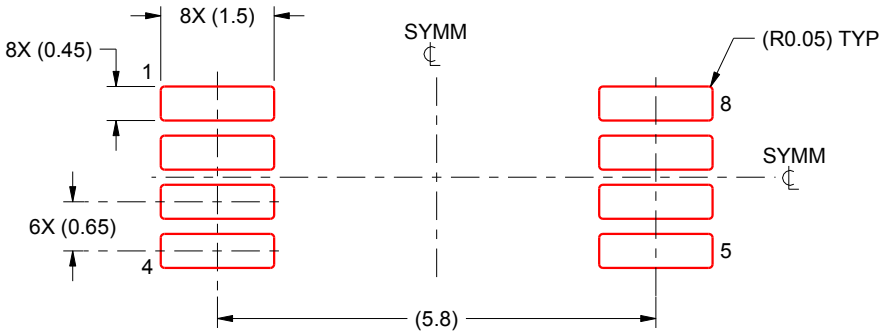

SOLDER PASTE EXAMPLE
BASED ON 0.125 mm THICK STENCIL
SCALE:10X

4221848/A 02/2015

NOTES: (continued)

8. Laser cutting apertures with trapezoidal walls and rounded corners may offer better paste release. IPC-7525 may have alternate design recommendations.
9. Board assembly site may have different recommendations for stencil design.

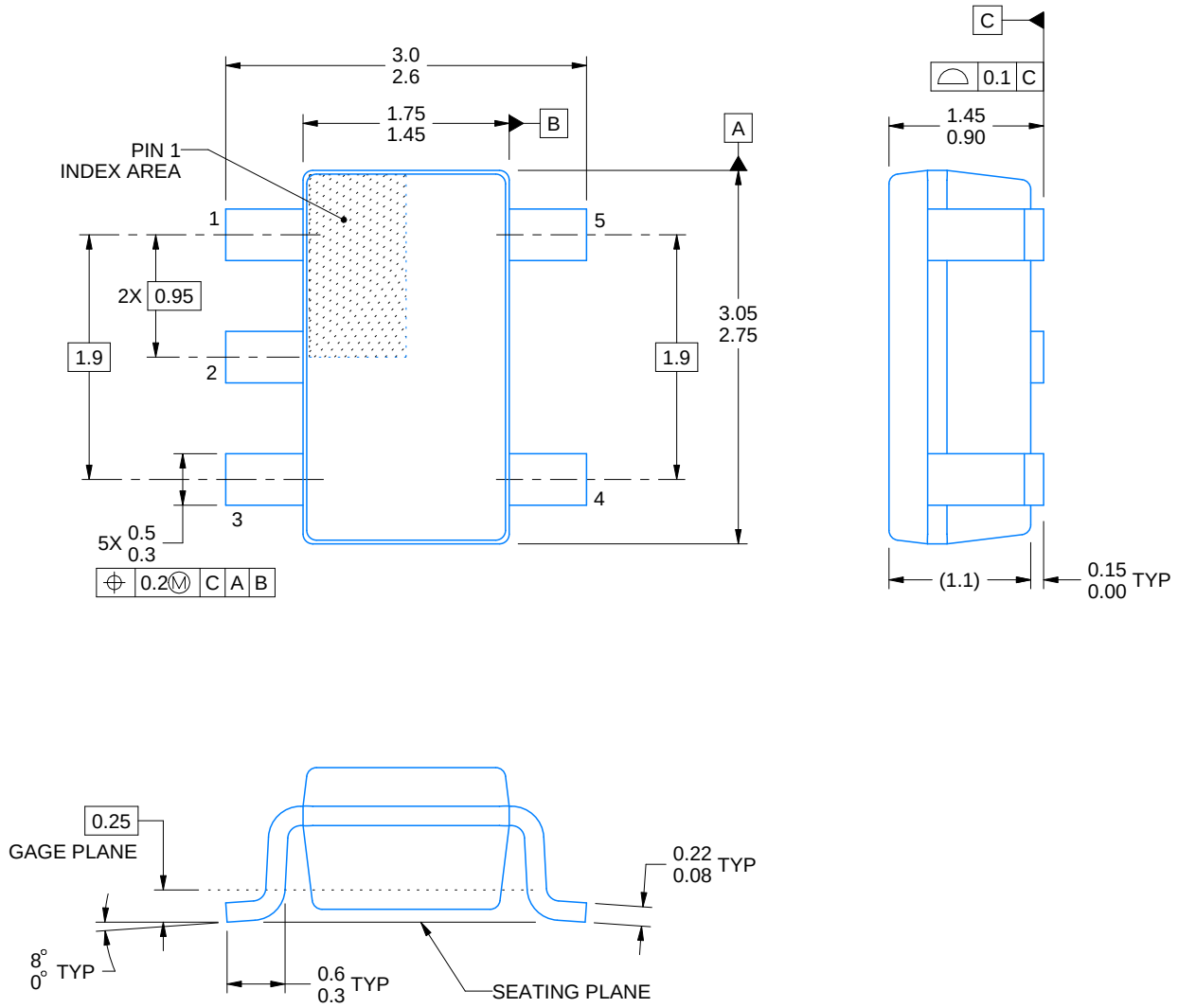

4214839/F 06/2021

NOTES:

1. All linear dimensions are in millimeters. Any dimensions in parenthesis are for reference only. Dimensioning and tolerancing per ASME Y14.5M.
2. This drawing is subject to change without notice.
3. Refernce JEDEC MO-178.
4. Body dimensions do not include mold flash, protrusions, or gate burrs. Mold flash, protrusions, or gate burrs shall not exceed 0.25 mm per side.

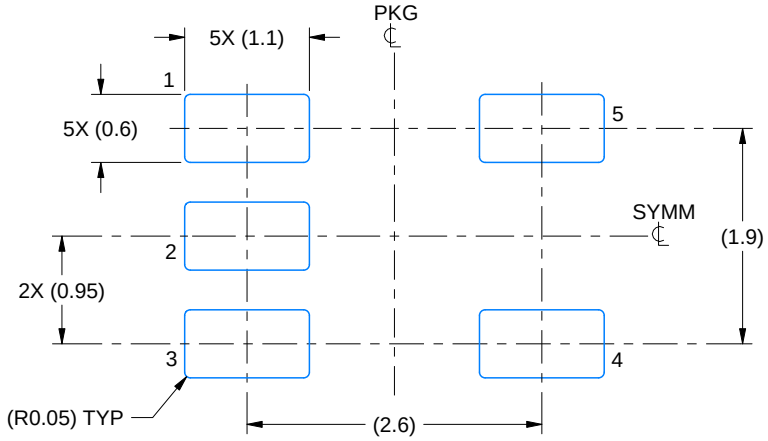

LAND PATTERN EXAMPLE
EXPOSED METAL SHOWN
SCALE:15X

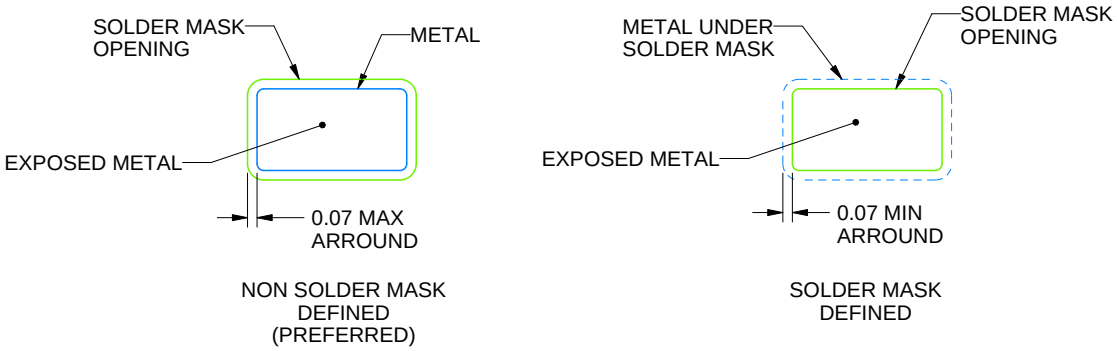

SOLDER MASK DETAILS

4214839/F 06/2021

NOTES: (continued)

5. Publication IPC-7351 may have alternate designs.
6. Solder mask tolerances between and around signal pads can vary based on board fabrication site.

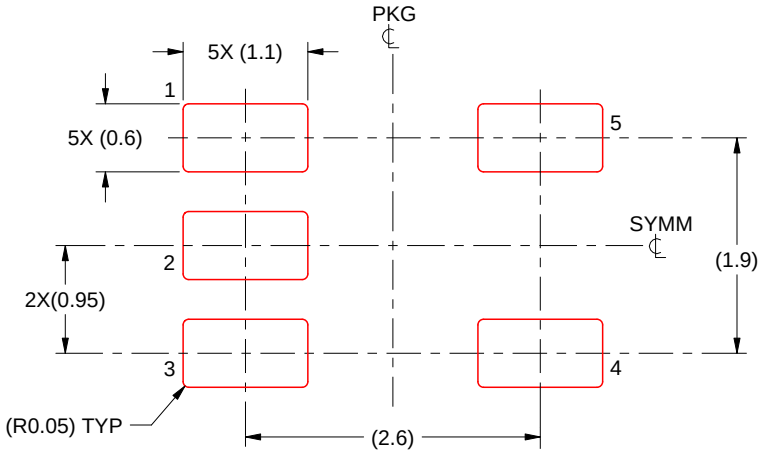

SOLDER PASTE EXAMPLE
BASED ON 0.125 mm THICK STENCIL
SCALE:15X

4214839/F 06/2021

NOTES: (continued)

7. Laser cutting apertures with trapezoidal walls and rounded corners may offer better paste release. IPC-7525 may have alternate design recommendations.
8. Board assembly site may have different recommendations for stencil design.

DCK (R–PDSO–G5) PLASTIC SMALL–OUTLINE PACKAGE

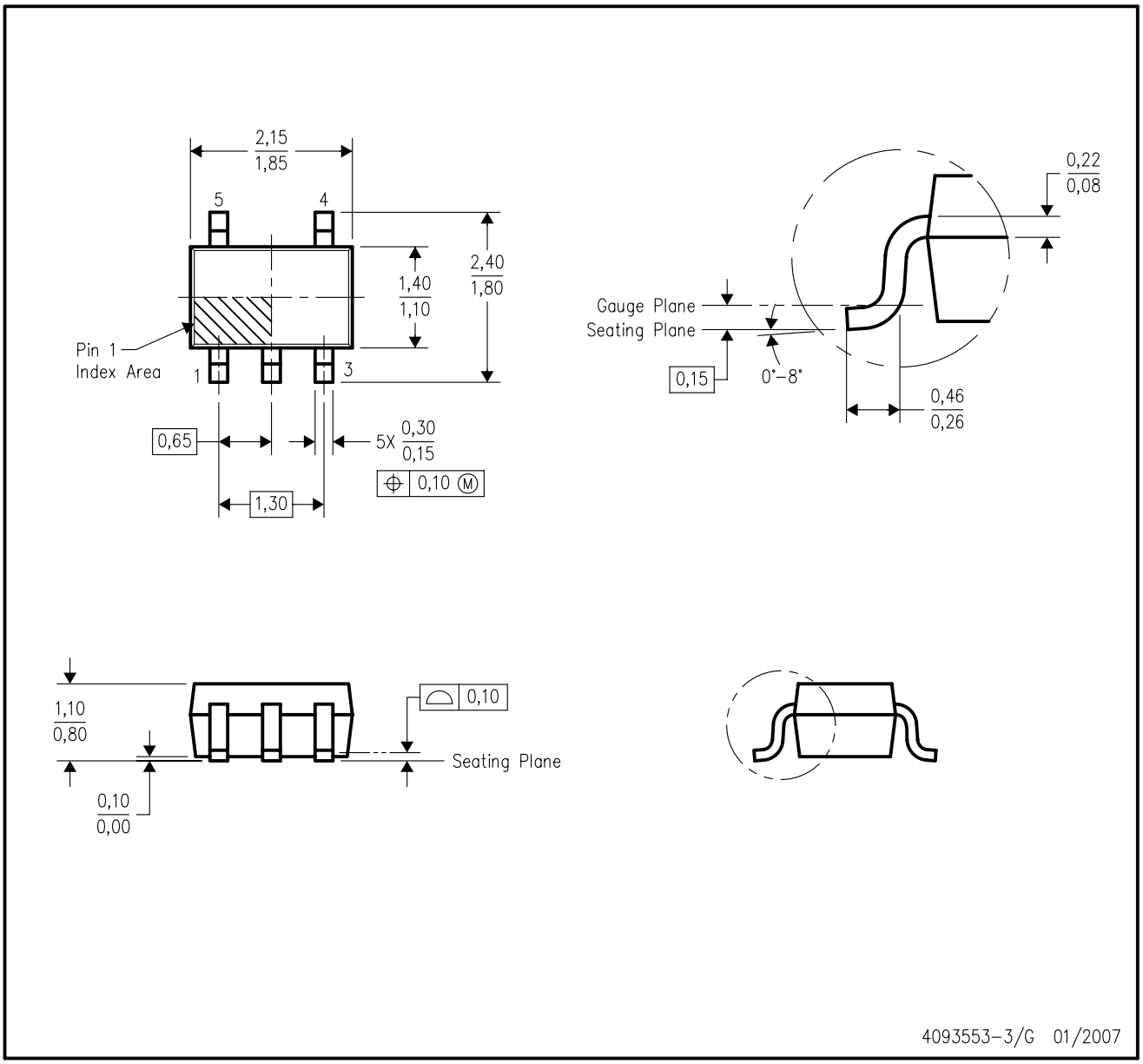

NOTES:
A. All linear dimensions are in millimeters.
B. This drawing is subject to change without notice.
C. Body dimensions do not include mold flash or protrusion. Mold flash and protrusion shall not exceed 0.15 per side.
D. Falls within JEDEC MO–203 variation AA.

DCK (R-PDSO-G5) PLASTIC SMALL OUTLINE

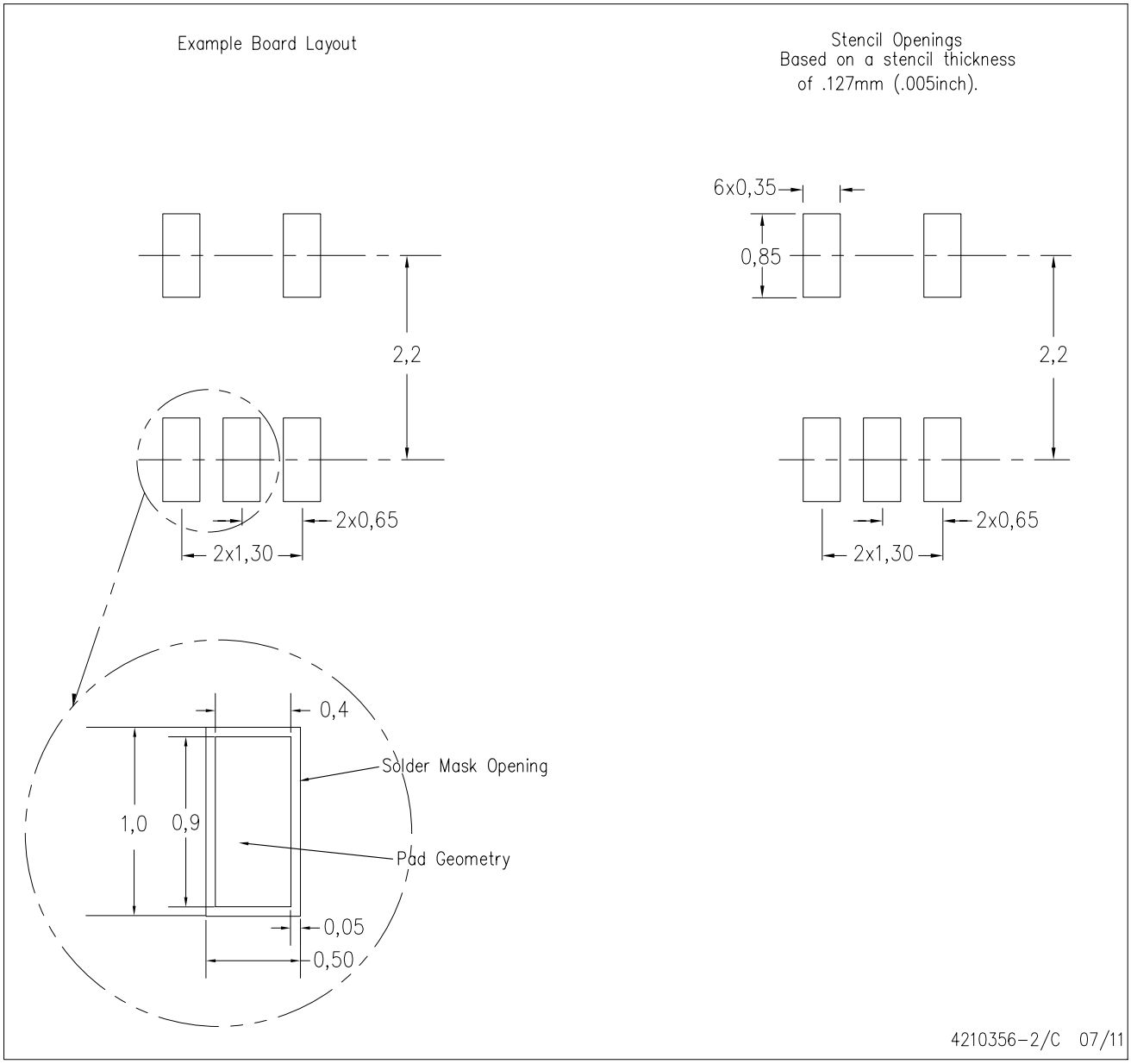

NOTES:
A. All linear dimensions are in millimeters.
B. This drawing is subject to change without notice.
C. Customers should place a note on the circuit board fabrication drawing not to alter the center solder mask defined pad.
D. Publication IPC-7351 is recommended for alternate designs.
E. Laser cutting apertures with trapezoidal walls and also rounding corners will offer better paste release. Customers should contact their board assembly site for stencil design recommendations. Example stencil design based on a 50% volumetric metal load solder paste. Refer to IPC-7525 for other stencil recommendations.

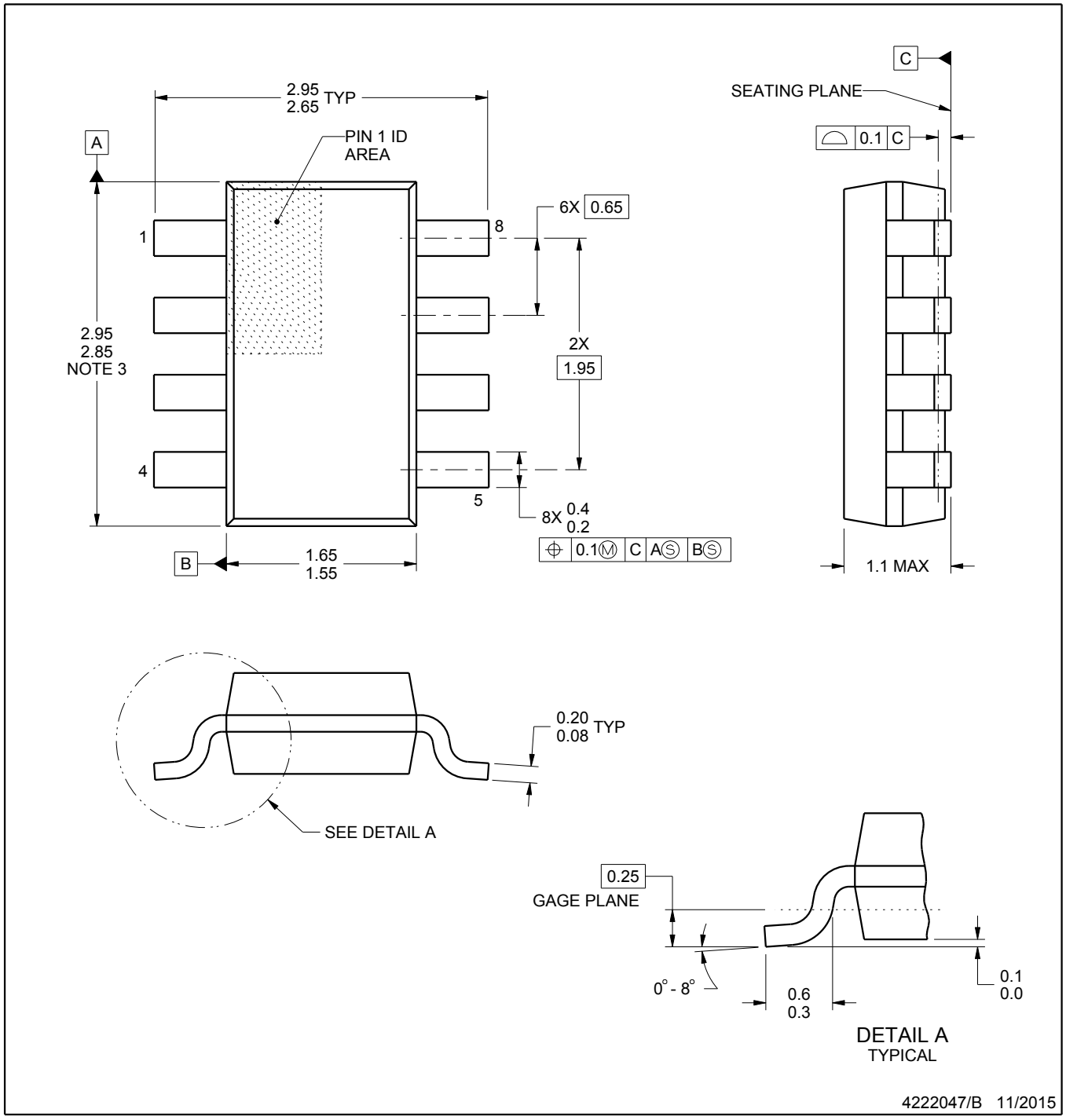

NOTES:

1. All linear dimensions are in millimeters. Any dimensions in parenthesis are for reference only. Dimensioning and tolerancing per ASME Y14.5M.
2. This drawing is subject to change without notice.
3. This dimension does not include mold flash, protrusions, or gate burrs. Mold flash, protrusions, or gate burrs shall not exceed 0.15 mm per side.

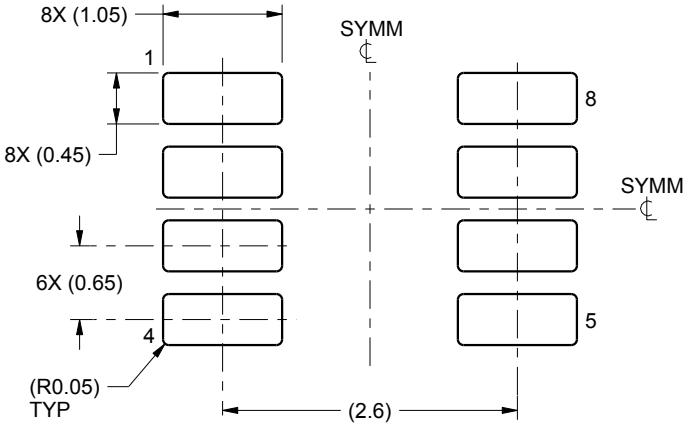

LAND PATTERN EXAMPLE
SCALE:15X

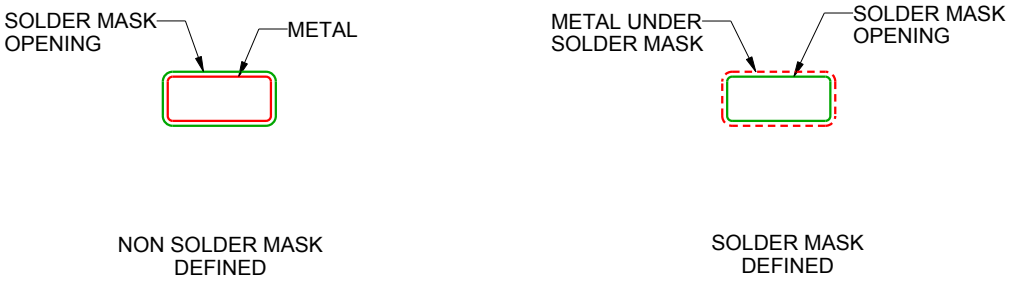

SOLDER MASK DETAILS

4222047/B 11/2015

NOTES: (continued)

4. Publication IPC-7351 may have alternate designs.
5. Solder mask tolerances between and around signal pads can vary based on board fabrication site.

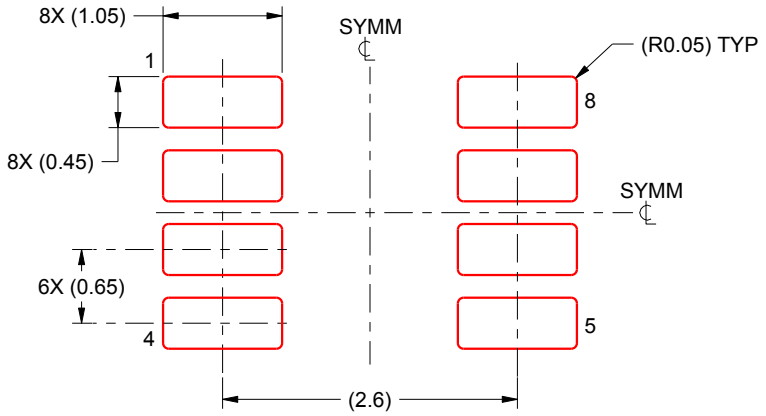

SOLDER PASTE EXAMPLE
BASED ON 0.125 mm THICK STENCIL
SCALE:15X

4222047/B 11/2015

NOTES: (continued)

6. Laser cutting apertures with trapezoidal walls and rounded corners may offer better paste release. IPC-7525 may have alternate design recommendations.
7. Board assembly site may have different recommendations for stencil design.

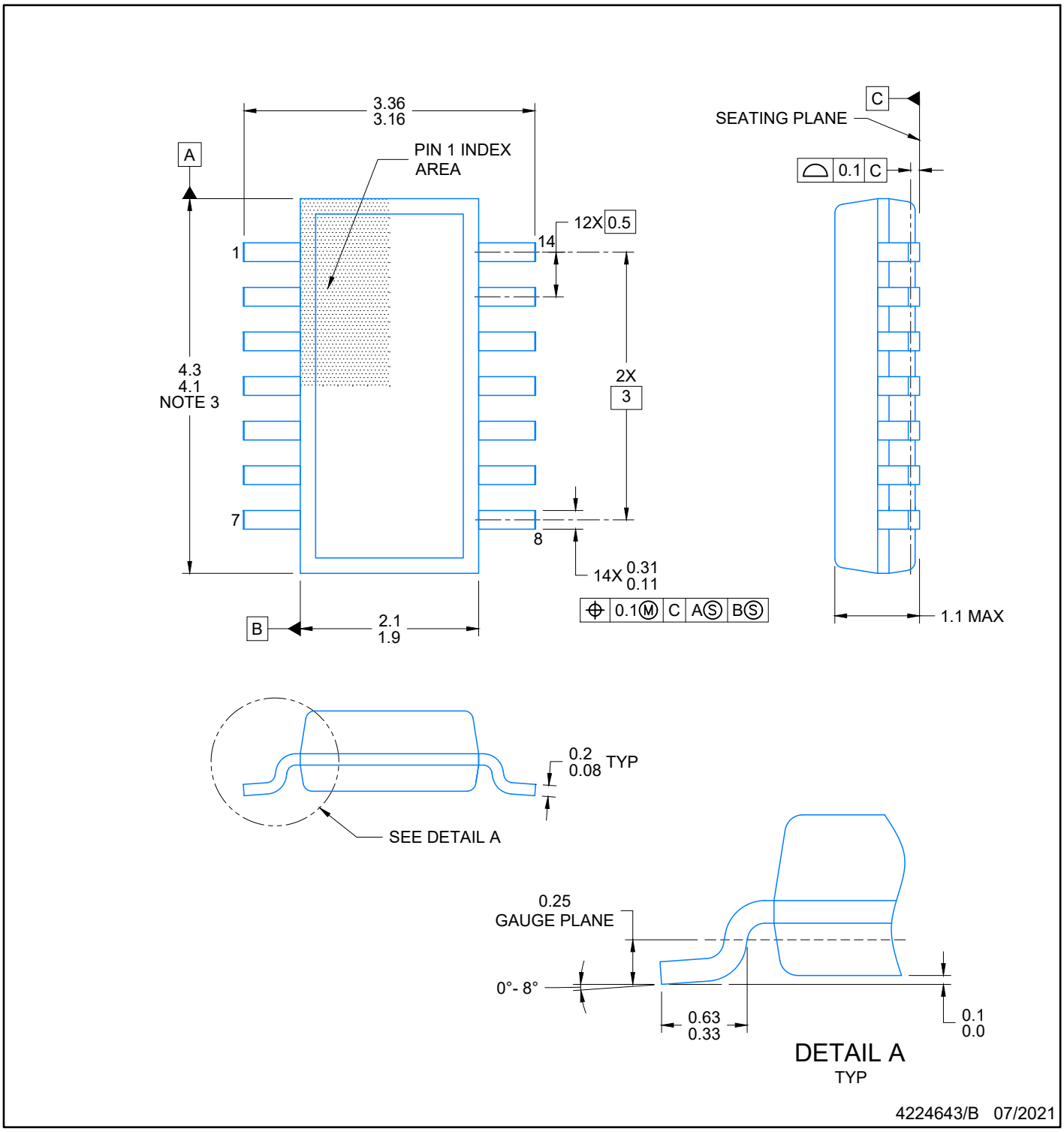

NOTES:

1. All linear dimensions are in millimeters. Any dimensions in parenthesis are for reference only. Dimensioning and tolerancing per ASME Y14.5M.
2. This drawing is subject to change without notice.
3. This dimension does not include mold flash, protrusions, or gate burrs. Mold flash, protrusions, or gate burrs shall not exceed 0.15 per side.
4. This dimension does not include interlead flash. Interlead flash shall not exceed 0.50 per side.
5. Reference JEDEC Registration MO-345, Variation AB

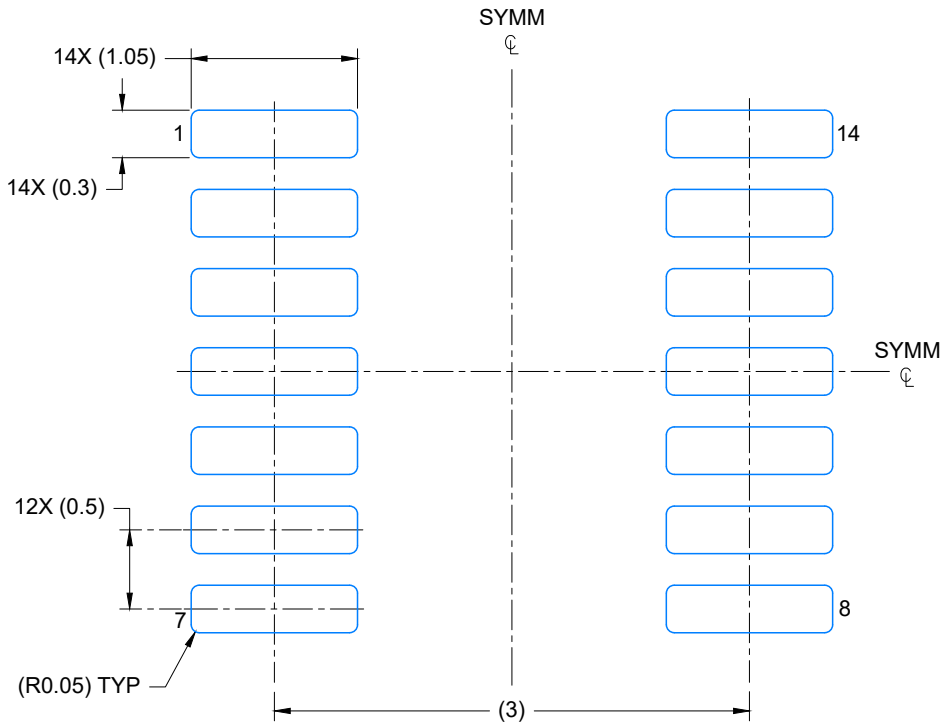

LAND PATTERN EXAMPLE
EXPOSED METAL SHOWN
SCALE: 20X

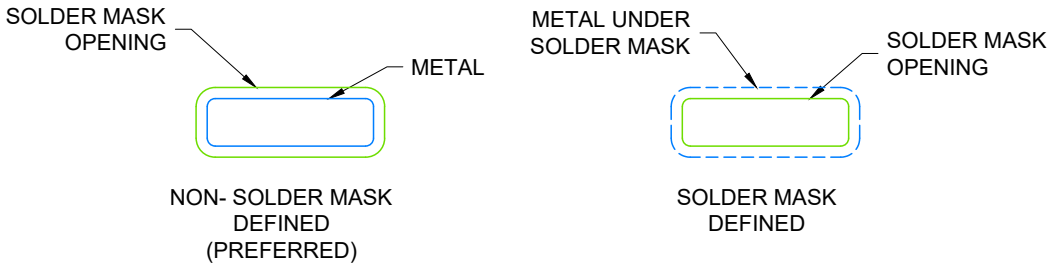

SOLDER MASK DETAILS

4224643/B 07/2021

NOTES: (continued)

6. Publication IPC-7351 may have alternate designs.
7. Solder mask tolerances between and around signal pads can vary based on board fabrication site.

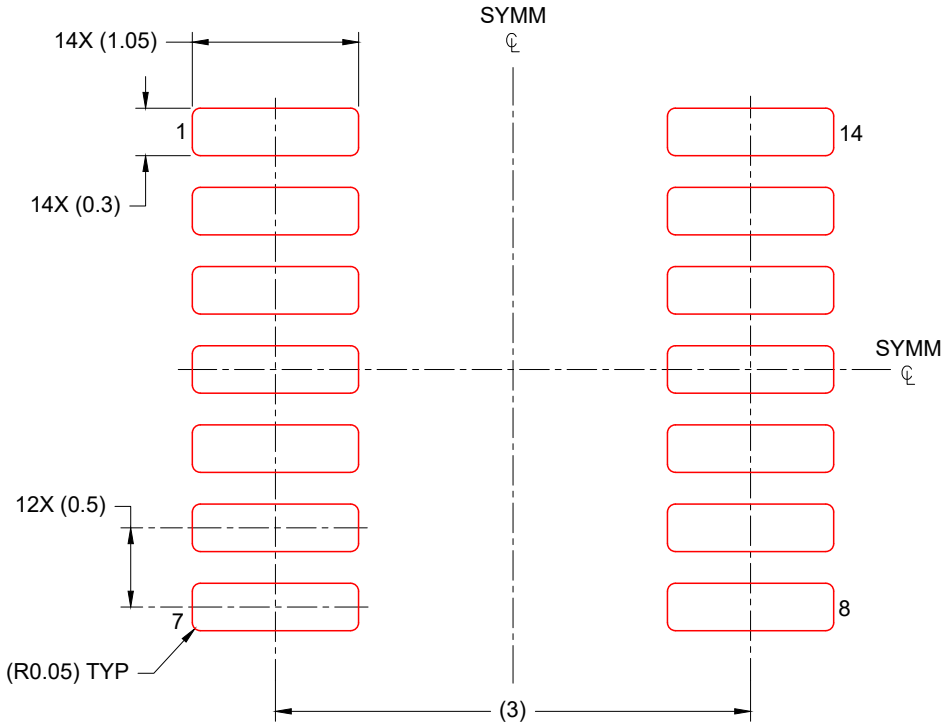

SOLDER PASTE EXAMPLE
BASED ON 0.125 mm THICK STENCIL
SCALE: 20X

4224643/B 07/2021

NOTES: (continued)

8. Laser cutting apertures with trapezoidal walls and rounded corners may offer better paste release. IPC-7525 may have alternate design recommendations.
9. Board assembly site may have different recommendations for stencil design.

重要声明和免责声明

TI“按原样”提供技术和可靠性数据（包括数据表）、设计资源（包括参考设计）、应用或其他设计建议、网络工具、安全信息和其他资源，不保证没有瑕疵且不做出任何明示或暗示的担保，包括但不限于对适销性、某特定用途方面的适用性或不侵犯任何第三方知识产权的暗示担保。

这些资源可供使用 TI 产品进行设计的熟练开发人员使用。您将自行承担以下全部责任：(1) 针对您的应用选择合适的 TI 产品，(2) 设计、验证并测试您的应用，(3) 确保您的应用满足相应标准以及任何其他功能安全、信息安全、监管或其他要求。

这些资源如有变更，恕不另行通知。TI 授权您仅可将这些资源用于研发本资源所述的 TI 产品的应用。严禁对这些资源进行其他复制或展示。您无权使用任何其他 TI 知识产权或任何第三方知识产权。您应全额赔偿因在这些资源的使用中对 TI 及其代表造成的任何索赔、损害、成本、损失和债务，TI 对此概不负责。

TI 提供的产品受 TI 的销售条款或 ti.com 上其他适用条款/TI 产品随附的其他适用条款的约束。TI 提供这些资源并不会扩展或以其他方式更改 TI 针对 TI 产品发布的适用的担保或担保免责声明。

TI 反对并拒绝您可能提出的任何其他或不同的条款。

邮寄地址：Texas Instruments, Post Office Box 655303, Dallas, Texas 75265
Copyright © 2022，德州仪器 (TI) 公司