Data sheet acquired from Harris Semiconductor
SCHS209C

February 1998 - Revised July 2003

CD74HC4067, CD74HCT4067

High-Speed CMOS Logic 16-Channel Analog Multiplexer/Demultiplexer

Features

- **Wide Analog Input Voltage Range**
- **Low "ON" Resistance**
  - **V_{CC} = 4.5V . . . . . 70Ω (Typ)**
  - **V_{CC} = 6V . . . . . 60Ω (Typ)**
- **Fast Switching and Propagation Speeds**
- **"Break-Before-Make" Switching. . . . . 6ns (Typ) at 4.5V**
- **Available in Both Narrow and Wide-Body Plastic Packages**
- **Fanout (Over Temperature Range)**
  - **Standard Outputs . . . . . 10 LSTTL Loads**
  - **Bus Driver Outputs . . . . . 15 LSTTL Loads**
- **Wide Operating Temperature Range . . . -55°C to 125°C**
- **Balanced Propagation Delay and Transition Times**
- **Significant Power Reduction Compared to LSTTL Logic ICs**
- **HC Types**
  - **2V to 6V Operation**
  - **High Noise Immunity: N_{IL} = 30%, N_{IH} = 30% of V_{CC} at V_{CC} = 5V**
- **HCT Types**
  - **4.5V to 5.5V Operation**
  - **Direct LSTTL Input Logic Compatibility, V_{IL}= 0.8V (Max), V_{IH} = 2V (Min)**
  - **CMOS Input Compatibility, $I_I \leq 1\mu A$ at V_{OL}, V_{OH}**

Description

The CD74HC4067 and CD74HCT4067 devices are digitally controlled analog switches that utilize silicon-gate CMOS technology to achieve operating speeds similar to LSTTL, with the low power consumption of standard CMOS integrated circuits.

These analog multiplexers/demultiplexers control analog voltages that may vary across the voltage supply range. They are bidirectional switches thus allowing any analog input to be used as an output and vice-versa. The switches have low "on" resistance and low "off" leakages. In addition, these devices have an enable control which when high will disable all switches to their "off" state.

Ordering Information

PART NUMBER	TEMP. RANGE (°C)	PACKAGE
CD74HC4067E	-55 to 125	24 Ld PDIP
CD74HC4067M	-55 to 125	24 Ld SOIC
CD74HC4067M96	-55 to 125	24 Ld SOIC
CD74HC4067SM96	-55 to 125	24 Ld SSOP
CD74HCT4067M	-55 to 125	24 Ld SOIC

NOTE: When ordering, use the entire part number. The suffix 96 denotes tape and reel.

Pinout

CD74HC4067 (PDIP, SOIC, SSOP)
CD74HCT4067 (SOIC)
TOP VIEW

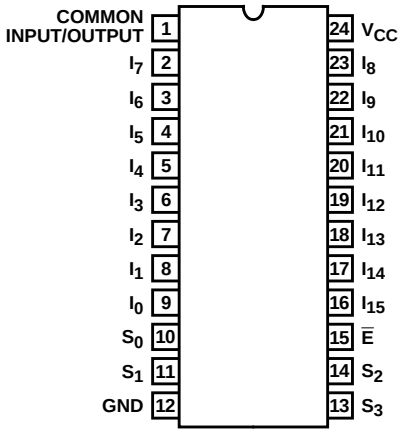

CAUTION: These devices are sensitive to electrostatic discharge. Users should follow proper IC Handling Procedures.

Copyright © 2003, Texas Instruments Incorporated

Functional Diagram

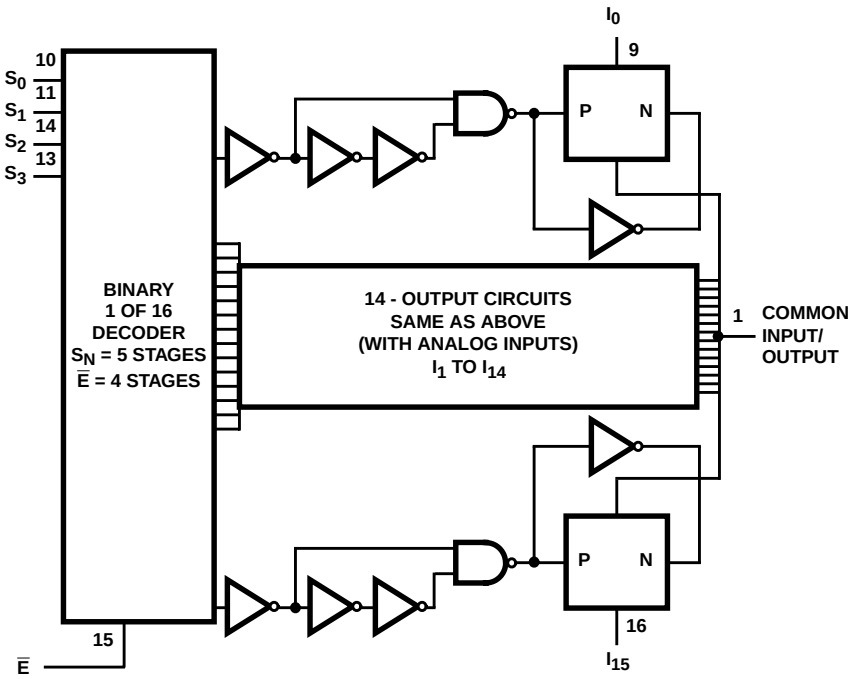

TRUTH TABLE

S0	S1	S2	S3	$\overline{E}$	SELECTED CHANNEL
X	X	X	X	1	None
0	0	0	0	0	0
1	0	0	0	0	1
0	1	0	0	0	2
1	1	0	0	0	3
0	0	1	0	0	4
1	0	1	0	0	5
0	1	1	0	0	6
1	1	1	0	0	7
0	0	0	1	0	8
1	0	0	1	0	9
0	1	0	1	0	10
1	1	0	1	0	11
0	0	1	1	0	12
1	0	1	1	0	13
0	1	1	1	0	14
1	1	1	1	0	15

H= High Level
L= Low Level
X= Don't Care

Absolute Maximum Ratings

DC Supply Voltage, V_{CC}
(Voltages Referenced to Ground) . . . . . -0.5V to 7V
DC Input Diode Current, I_{IK}
For V_I < -0.5V or V_I > V_{CC} + 0.5V . . . . . ±20mA
DC Drain Current, I_O
For -0.5V < V_O < V_{CC} + 0.5V . . . . . ±25mA
DC Output Diode Current, I_{OK}
For V_O < -0.5V or V_O > V_{CC} + 0.5V . . . . . ±20mA
DC Output Source or Sink Current per Output Pin, I_O
For V_O > -0.5V or V_O < V_{CC} + 0.5V . . . . . ±25mA
DC V_{CC} or Ground Current, I_{CC} . . . . . ±50mA

Operating Conditions

Temperature Range, T_A . . . . . -55°C to 125°C
Supply Voltage Range, V_{CC}
HC Types . . . . . 2V to 6V
HCT Types . . . . . 4.5V to 5.5V
DC Input or Output Voltage, V_I, V_O . . . . . 0V to V_{CC}
Input Rise and Fall Time
2V . . . . . 1000ns (Max)
4.5V. . . . . 500ns (Max)
6V . . . . . 400ns (Max)

Thermal Information

Thermal Resistance (Typical)	θ_{JA} (°C/W)
E (PDIP) Package, Note 1	67
M (SOIC) Package, Note 2	46
SM (SSOP) Package, Note 2	63

Maximum Junction Temperature (Plastic Package) . . . . . 150°C
Maximum Storage Temperature Range . . . . . -65°C to 150°C

CAUTION: Stresses above those listed in "Absolute Maximum Ratings" may cause permanent damage to the device. This is a stress only rating and operation of the device at these or any other conditions above those indicated in the operational sections of this specification is not implied.

NOTES:

1. The package thermal impedance is calculated in accordance with JESD 51-3.
2. The package thermal impedance is calculated in accordance with JESD 51-7.

DC Electrical Specifications

PARAMETER	SYMBOL	TEST CONDITIONS		V_{CC} (V)	25°C			-40°C TO 85°C		-55°C TO 125°C		UNITS
		V_I (V)	V_{IS} (V)		MIN	TYP	MAX	MIN	MAX	MIN	MAX	
HC TYPES												
High Level Input Voltage	V_{IH}	-	-	2	1.5	-	-	1.5	-	1.5	-	V
				4.5	3.15	-	-	3.15	-	3.15	-	V
				6	4.2	-	-	4.2	-	4.2	-	V
Low Level Input Voltage	V_{IL}	-	-	2	-	-	0.5	-	0.5	-	0.5	V
				4.5	-	-	1.35	-	1.35	-	1.35	V
				6	-	-	1.8	-	1.8	-	1.8	V
Maximum "ON" Resistance I_O = 1mA	R_{ON}	V_{CC} or GND	V_{CC} or GND	4.5	-	70	160	-	200	-	240	Ω
				6	-	60	140	-	175	-	210	Ω
		V_{CC} to GND	V_{CC} to GND	4.5	-	90	180	-	225	-	270	Ω
				6	-	80	160	-	200	-	240	Ω
Maximum "ON" Resistance Between Any Two Switches	ΔR_{ON}	-	-	4.5	-	10	-	-	-	-	-	Ω
				6	-	8.5	-	-	-	-	-	Ω
Switch "Off" Leakage Current 16 Channels	I_{IZ}	$\overline{E}$ = V_{CC}	V_{CC} or GND	6	-	-	±0.8	-	±8	-	±8	µA
Logic Input Leakage Current	I_I	V_{CC} or GND	-	6	-	-	±0.1	-	±1	-	±1	µA

DC Electrical Specifications (Continued)

PARAMETER	SYMBOL	TEST CONDITIONS		V_{CC} (V)	25°C			-40°C TO 85°C		-55°C TO 125°C		UNITS
		V_I (V)	V_{IS} (V)		MIN	TYP	MAX	MIN	MAX	MIN	MAX	
Quiescent Device Current I_O = 0mA	I_{CC}	V_{CC} or GND	-	6	-	-	8	-	80	-	160	µA
HCT TYPES												
High Level Input Voltage	V_{IH}	-	-	4.5	2	-	-	2	-	2	-	V
Low Level Input Voltage	V_{IL}	-	-	4.5	-	-	0.8	-	0.8	-	0.8	V
Maximum "ON" Resistance I_O = 1mA	R_{ON}	V_{CC} or GND	V_{CC} or GND	4.5	-	70	160	-	200	-	240	Ω
		V_{CC} to GND	V_{CC} to GND	4.5	-	90	180	-	225	-	270	Ω
Maximum "ON" Resistance Between Any Two Switches	ΔR_{ON}	-	-	4.5	-	10	-	-	-	-	-	Ω
Switch "Off" Leakage Current 16 Channels	I_{IZ}	$\overline{E} = V_{CC}$	V_{CC} or GND	6	-	-	±0.8	-	±8	-	±8	µA
Logic Input Leakage Current	I_I	V_{CC} or GND (Note 3)	-	6	-	-	±0.1	-	±1	-	±1	µA
Quiescent Device Current	I_{CC}	V_{CC} or GND	-	6	-	-	8	-	80	-	160	µA
Additional Quiescent Device Current Per Input Pin: 1 Unit Load	ΔI_{CC} (Note 4)	V_{CC} -2.1	-	-	-	100	360	-	450	-	490	µA

NOTES:

3. Any voltage between V_{CC} and GND.
4. For dual-supply systems theoretical worst case (V_I = 2.4V, V_{CC} = 5.5V) specification is 1.8mA.

HCT Input Loading Table

INPUT	UNIT LOAD
S_0 - S_3	0.5
$\overline{E}$	0.3

NOTE: Unit Load is ΔI_{CC} limit specified in DC Electrical Specifications table, e.g., 360µA max at 25°C.

Switching Specifications Input t_r, t_f = 6ns

PARAMETER	SYMBOL	TEST CONDITIONS	V_{CC} (V)	25°C			-40°C TO 85°C		-55°C TO 125°C		UNITS
				MIN	TYP	MAX	MIN	MAX	MIN	MAX	
HC TYPES											
Propagation Delay Time Switch In to Out	t_{PLH}, t_{PHL}	C_L = 50pF	2	-	-	75	-	95	-	110	ns
			4.5	-	-	15	-	19	-	22	ns
			6	-	-	13	-	16	-	19	ns
		C_L = 15pF	5	-	6	-	-	-	-	-	ns

Switching Specifications Input t_r, t_f = 6ns **(Continued)**

PARAMETER	SYMBOL	TEST CONDITIONS	V_{CC} (V)	25°C			-40°C TO 85°C		-55°C TO 125°C		UNITS
				MIN	TYP	MAX	MIN	MAX	MIN	MAX	
Switch Turn On $\overline{E}$ to Out	t_{PZH}, t_{PZL}	C_L = 50pF	2	-	-	275	-	345	-	415	ns
			4.5	-	-	55	-	69	-	83	ns
			6	-	-	47	-	59	-	71	ns
		C_L = 15pF	5	-	23	-	-	-	-	-	ns
Switch Turn On Sn to Out	t_{PZH}, t_{PZL}	C_L = 50pF	2	-	-	300	-	375	-	450	ns
			4.5	-	-	60	-	75	-	90	ns
			6	-	-	51	-	64	-	76	ns
		C_L = 15pF	5	-	25	-	-	-	-	-	ns
Switch Turn Off $\overline{E}$ to Out	t_{PHZ}, t_{PLZ}	C_L = 50pF	2	-	-	275	-	345	-	415	ns
			4.5	-	-	55	-	69	-	83	ns
			6	-	-	47	-	59	-	71	ns
		C_L = 15pF	5	-	23	-	-	-	-	-	ns
Switch Turn Off Sn to Out	t_{PHZ}, t_{PLZ}	C_L = 50pF	2	-	-	290	-	365	-	435	ns
			4.5	-	-	58	-	73	-	87	ns
			6	-	-	49	-	62	-	74	ns
		C_L = 50pF	5	-	21	-	-	-	-	-	ns
Input (Control) Capacitance	C_I	-	-	-	-	10	-	10	-	10	pF
Power Dissipation Capacitance (Notes 5, 6)	C_{PD}	-	5	-	93	-	-	-	-	-	pF
HCT TYPES											
Propagation Delay Time Switch In to Out	t_{PLH}, t_{PHL}	C_L = 50pF	4.5	-	-	15	-	19	-	22	ns
		C_L = 15pF	5	-	6	-	-	-	-	-	ns
Switch Turn On $\overline{E}$ to Out	t_{PZH}, t_{PZL}	C_L = 50pF	4.5	-	-	60	-	75	-	90	ns
		C_L = 15pF	5	-	25	-	-	-	-	-	ns
Switch Turn On Sn to Out	t_{PZH}, t_{PZL}	C_L = 50pF	4.5	-	-	60	-	75	-	90	ns
		C_L = 15pF	5	-	25	-	-	-	-	-	ns
Switch Turn Off $\overline{E}$ to Out	t_{PHZ}, t_{PLZ}	C_L = 50pF	4.5	-	-	55	-	69	-	83	ns
		C_L = 15pF	5	-	23	-	-	-	-	-	ns
Switch Turn Off Sn to Out	t_{PHZ}, t_{PLZ}	C_L = 50pF	4.5	-	-	58	-	73	-	87	ns
		C_L = 15pF	5	-	21	-	-	-	-	-	ns
Input (Control) Capacitance	C_I	-	-	-	-	10	-	10	-	10	pF
Power Dissipation Capacitance (Notes 5, 6)	C_{PD}	-	5	-	96	-	-	-	-	-	pF

NOTES:

5. C_{PD} is used to determine the dynamic power consumption, per package.
6. $P_D = C_{PD} V_{CC}^2 f_i + \Sigma (C_L + C_S) V_{CC}^2 f_o$ where f_i = input frequency, f_o = output frequency, C_L = output load capacitance, C_S = switch capacitance, V_{CC} = supply voltage.

Analog Channel Specifications $T_A = 25^oC$

PARAMETER	TEST CONDITIONS	V_{CC} (V)	HC/HCT	UNITS
Switch Frequency Response Bandwidth at -3dB (Figure 2)	Figure 4, Notes 7, 8	4.5	89	MHz
Sine Wave Distortion	Figure 5	4.5	0.051	%
Feedthrough Noise $\overline{E}$ to Switch	Figure 6, Notes 8, 9	4.5	TBE	mV
Feedthrough Noise S to Switch			TBE	mV
Switch “OFF” Signal Feedthrough (Figure 3)	Figure 7	4.5	-75	dB
Switch Input Capacitance, C_S		-	5	pF
Common Capacitance, C_{COM}		-	50	pF

NOTES:

7. Adjust input level for 0dBm at output, f = 1MHz.
8. V_{IS} is centered at $V_{CC}/2$.
9. Adjust input for 0dBm at V_{IS}.

Typical Performance Curves

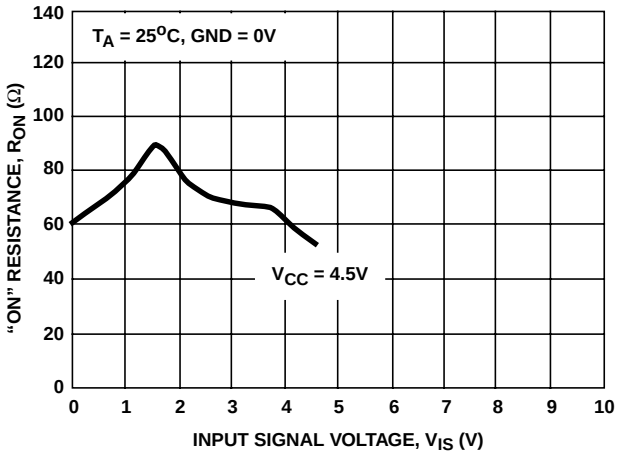

FIGURE 1. TYPICAL “ON” RESISTANCE vs INPUT SIGNAL VOLTAGE

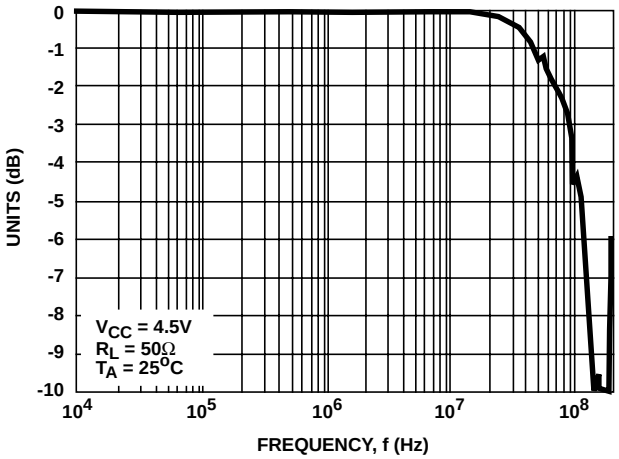

FIGURE 2. TYPICAL SWITCH FREQUENCY RESPONSE

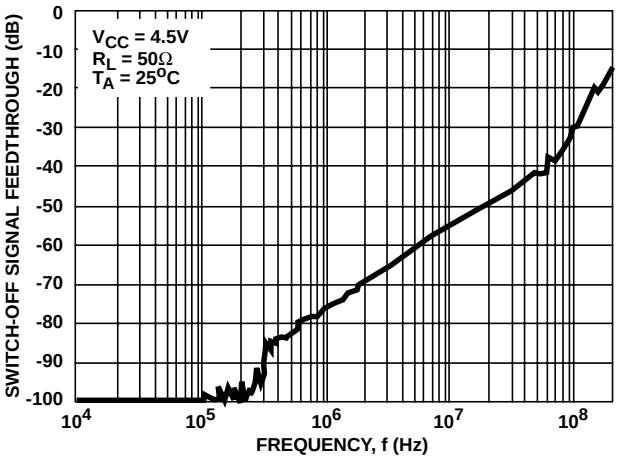

FIGURE 3. TYPICAL SWITCH-OFF SIGNAL FEEDTHROUGH vs FREQUENCY

Analog Test Circuits

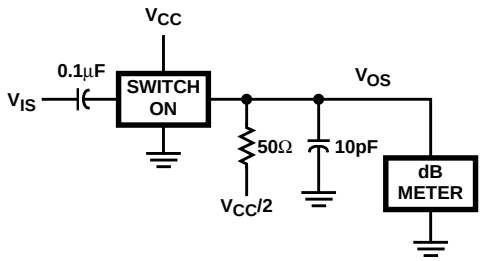

FIGURE 4. FREQUENCY RESPONSE TEST CIRCUIT

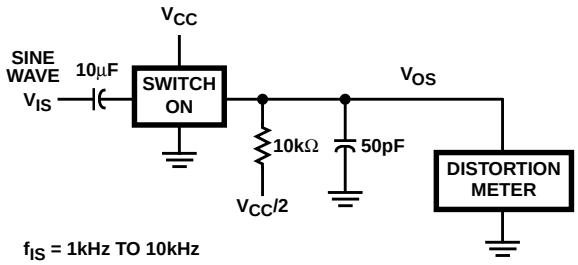

FIGURE 5. SINE WAVE DISTORTION TEST CIRCUIT

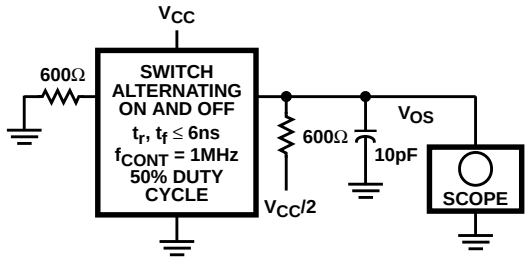

FIGURE 6. CONTROL-TO-SWITCH FEEDTHROUGH NOISE TEST CIRCUIT

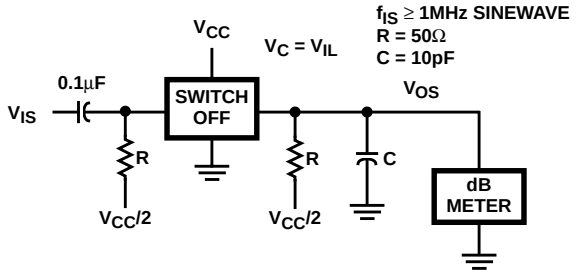

FIGURE 7. SWITCH OFF SIGNAL FEEDTHROUGH TEST CIRCUIT

Test Circuits and Waveforms

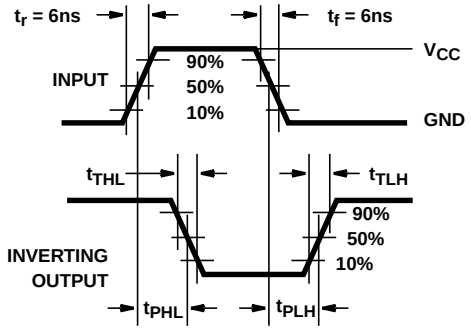

FIGURE 8. HC TRANSITION TIMES AND PROPAGATION DELAY TIMES, COMBINATION LOGIC

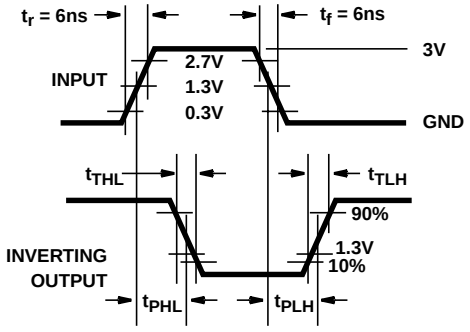

FIGURE 9. HCT TRANSITION TIMES AND PROPAGATION DELAY TIMES, COMBINATION LOGIC

PACKAGING INFORMATION

Orderable Device	Status (1)	Package Type	Package Drawing	Pins	Package Qty	Eco Plan (2)	Lead finish/ Ball material (6)	MSL Peak Temp (3)	Op Temp (°C)	Device Marking (4/5)	Samples
CD74HC4067M	ACTIVE	SOIC	DW	24	25	RoHS & Green	NIPDAU	Level-1-260C-UNLIM	-55 to 125	HC4067M	Samples
CD74HC4067M96	ACTIVE	SOIC	DW	24	2000	RoHS & Green	NIPDAU | SN	Level-1-260C-UNLIM	-55 to 125	HC4067M	Samples
CD74HC4067M96E4	ACTIVE	SOIC	DW	24	2000	RoHS & Green	NIPDAU	Level-1-260C-UNLIM	-55 to 125	HC4067M	Samples
CD74HC4067M96G4	ACTIVE	SOIC	DW	24	2000	RoHS & Green	NIPDAU	Level-1-260C-UNLIM	-55 to 125	HC4067M	Samples
CD74HC4067MG4	ACTIVE	SOIC	DW	24	25	RoHS & Green	NIPDAU	Level-1-260C-UNLIM	-55 to 125	HC4067M	Samples
CD74HC4067SM96	ACTIVE	SSOP	DB	24	2000	RoHS & Green	NIPDAU	Level-1-260C-UNLIM	-55 to 125	HP4067	Samples
CD74HC4067SM96E4	ACTIVE	SSOP	DB	24	2000	RoHS & Green	NIPDAU	Level-1-260C-UNLIM	-55 to 125	HP4067	Samples
CD74HC4067SM96G4	ACTIVE	SSOP	DB	24	2000	RoHS & Green	NIPDAU	Level-1-260C-UNLIM	-55 to 125	HP4067	Samples
CD74HCT4067M	ACTIVE	SOIC	DW	24	25	RoHS & Green	NIPDAU	Level-1-260C-UNLIM	-55 to 125	HCT4067M	Samples
CD74HCT4067ME4	ACTIVE	SOIC	DW	24	25	RoHS & Green	NIPDAU	Level-1-260C-UNLIM	-55 to 125	HCT4067M	Samples
CD74HCT4067MG4	ACTIVE	SOIC	DW	24	25	RoHS & Green	NIPDAU	Level-1-260C-UNLIM	-55 to 125	HCT4067M	Samples

(1) The marketing status values are defined as follows:
ACTIVE: Product device recommended for new designs.
LIFEBUY: TI has announced that the device will be discontinued, and a lifetime-buy period is in effect.
NRND: Not recommended for new designs. Device is in production to support existing customers, but TI does not recommend using this part in a new design.
PREVIEW: Device has been announced but is not in production. Samples may or may not be available.
OBSOLETE: TI has discontinued the production of the device.

(2) **RoHS:** TI defines "RoHS" to mean semiconductor products that are compliant with the current EU RoHS requirements for all 10 RoHS substances, including the requirement that RoHS substance do not exceed 0.1% by weight in homogeneous materials. Where designed to be soldered at high temperatures, "RoHS" products are suitable for use in specified lead-free processes. TI may reference these types of products as "Pb-Free".
RoHS Exempt: TI defines "RoHS Exempt" to mean products that contain lead but are compliant with EU RoHS pursuant to a specific EU RoHS exemption.
Green: TI defines "Green" to mean the content of Chlorine (Cl) and Bromine (Br) based flame retardants meet JS709B low halogen requirements of <=1000ppm threshold. Antimony trioxide based flame retardants must also meet the <=1000ppm threshold requirement.

(3) MSL, Peak Temp. - The Moisture Sensitivity Level rating according to the JEDEC industry standard classifications, and peak solder temperature.

(4) There may be additional marking, which relates to the logo, the lot trace code information, or the environmental category on the device.

(5) Multiple Device Markings will be inside parentheses. Only one Device Marking contained in parentheses and separated by a "~" will appear on a device. If a line is indented then it is a continuation of the previous line and the two combined represent the entire Device Marking for that device.

(6) Lead finish/Ball material - Orderable Devices may have multiple material finish options. Finish options are separated by a vertical ruled line. Lead finish/Ball material values may wrap to two lines if the finish value exceeds the maximum column width.

Important Information and Disclaimer: The information provided on this page represents TI's knowledge and belief as of the date that it is provided. TI bases its knowledge and belief on information provided by third parties, and makes no representation or warranty as to the accuracy of such information. Efforts are underway to better integrate information from third parties. TI has taken and continues to take reasonable steps to provide representative and accurate information but may not have conducted destructive testing or chemical analysis on incoming materials and chemicals. TI and TI suppliers consider certain information to be proprietary, and thus CAS numbers and other limited information may not be available for release.

In no event shall TI's liability arising out of such information exceed the total purchase price of the TI part(s) at issue in this document sold by TI to Customer on an annual basis.

OTHER QUALIFIED VERSIONS OF CD74HCT4067 :

- Automotive : CD74HCT4067-Q1

NOTE: Qualified Version Definitions:

- Automotive - Q100 devices qualified for high-reliability automotive applications targeting zero defects

TAPE AND REEL INFORMATION

REEL DIMENSIONS

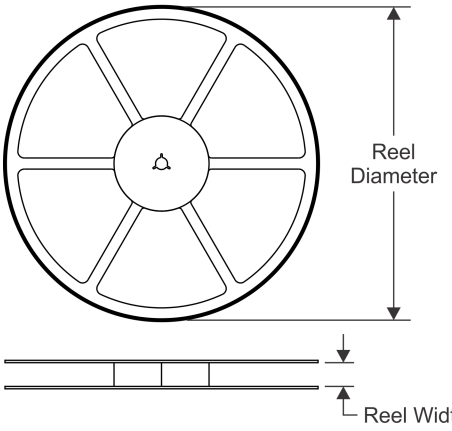

TAPE DIMENSIONS

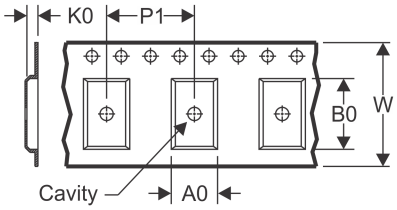

A0	Dimension designed to accommodate the component width
B0	Dimension designed to accommodate the component length
K0	Dimension designed to accommodate the component thickness
W	Overall width of the carrier tape
P1	Pitch between successive cavity centers

QUADRANT ASSIGNMENTS FOR PIN 1 ORIENTATION IN TAPE

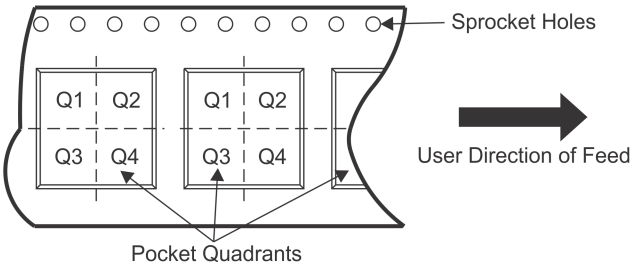

*All dimensions are nominal

Device	Package Type	Package Drawing	Pins	SPQ	Reel Diameter (mm)	Reel Width W1 (mm)	A0 (mm)	B0 (mm)	K0 (mm)	P1 (mm)	W (mm)	Pin1 Quadrant
CD74HC4067M96	SOIC	DW	24	2000	330.0	24.4	10.75	15.7	2.7	12.0	24.0	Q1
CD74HC4067M96	SOIC	DW	24	2000	330.0	24.4	10.75	15.7	2.7	12.0	24.0	Q1
CD74HC4067M96G4	SOIC	DW	24	2000	330.0	24.4	10.75	15.7	2.7	12.0	24.0	Q1
CD74HC4067SM96	SSOP	DB	24	2000	330.0	16.4	8.2	8.8	2.5	12.0	16.0	Q1

TAPE AND REEL BOX DIMENSIONS

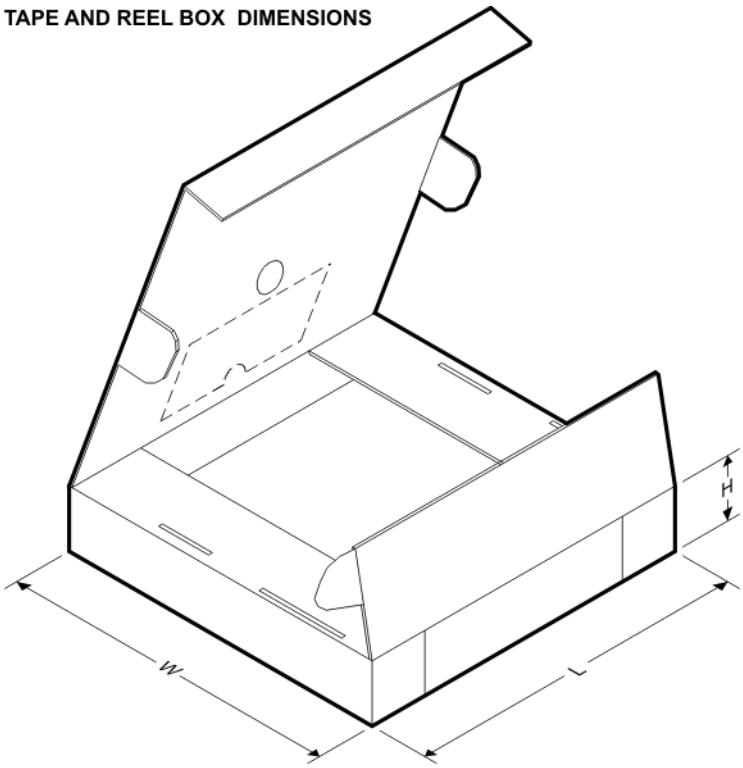

*All dimensions are nominal

Device	Package Type	Package Drawing	Pins	SPQ	Length (mm)	Width (mm)	Height (mm)
CD74HC4067M96	SOIC	DW	24	2000	350.0	350.0	43.0
CD74HC4067M96	SOIC	DW	24	2000	364.0	361.0	36.0
CD74HC4067M96G4	SOIC	DW	24	2000	350.0	350.0	43.0
CD74HC4067SM96	SSOP	DB	24	2000	853.0	449.0	35.0

TUBE

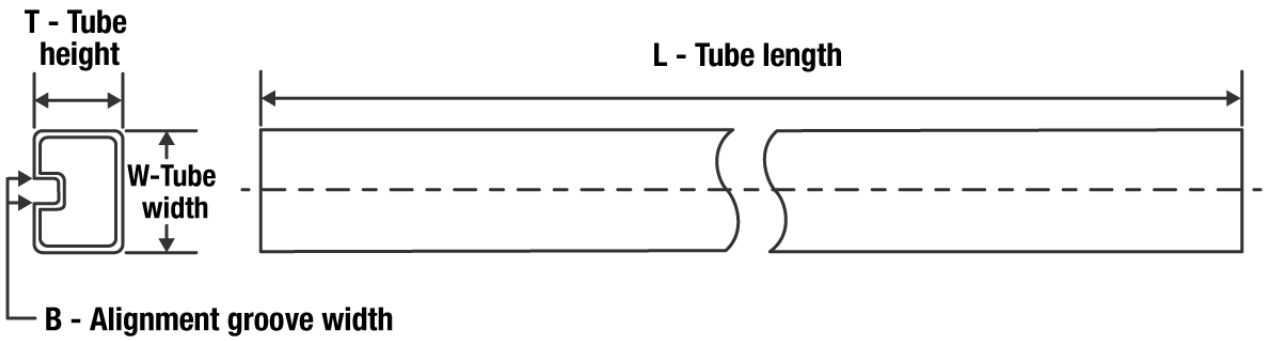

*All dimensions are nominal

Device	Package Name	Package Type	Pins	SPQ	L (mm)	W (mm)	T (µm)	B (mm)
CD74HC4067M	DW	SOIC	24	25	506.98	12.7	4826	6.6
CD74HC4067MG4	DW	SOIC	24	25	506.98	12.7	4826	6.6
CD74HCT4067M	DW	SOIC	24	25	506.98	12.7	4826	6.6
CD74HCT4067ME4	DW	SOIC	24	25	506.98	12.7	4826	6.6
CD74HCT4067MG4	DW	SOIC	24	25	506.98	12.7	4826	6.6

DW (R–PDSO–G24) PLASTIC SMALL OUTLINE

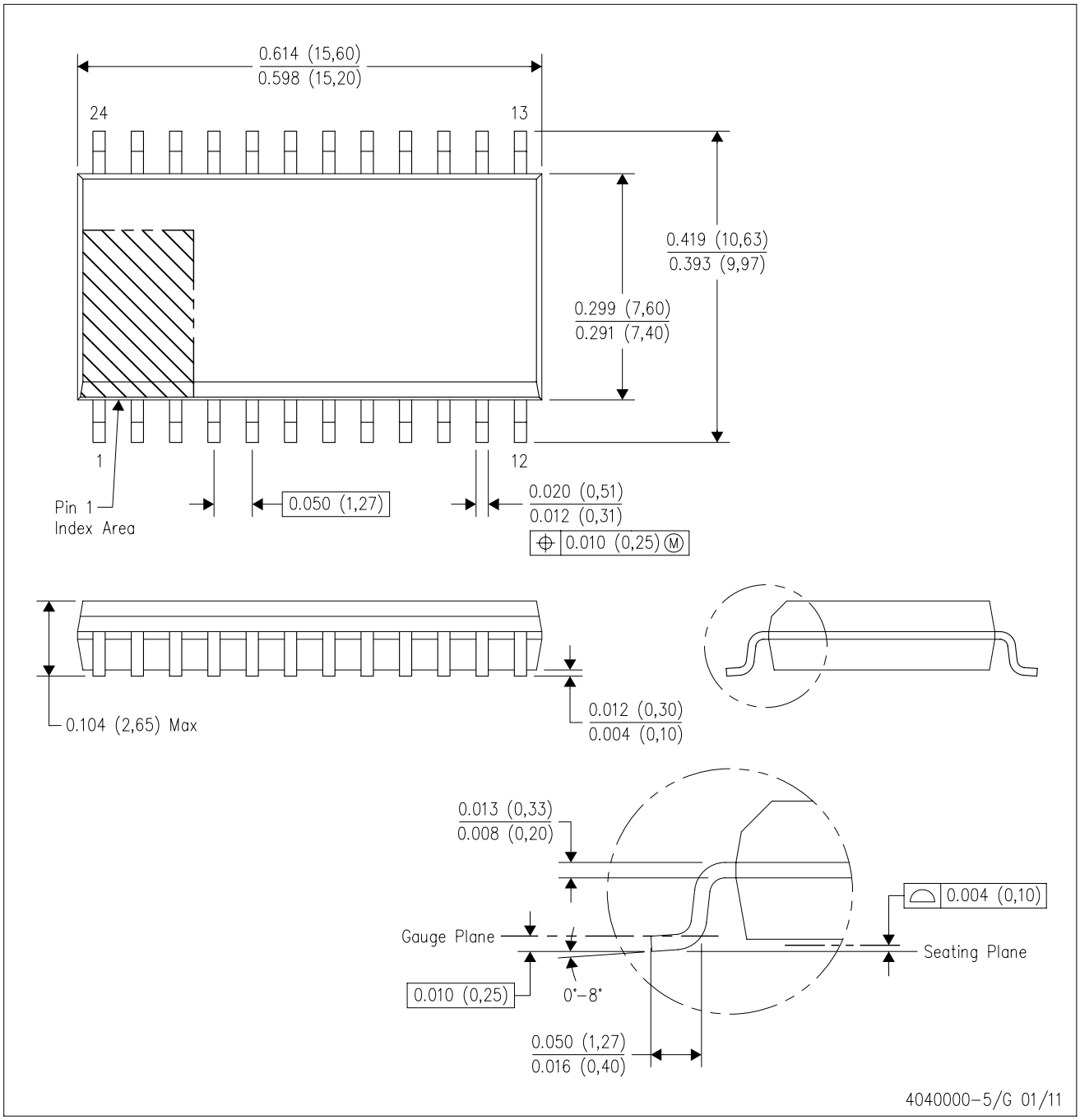

NOTES:
A. All linear dimensions are in inches (millimeters). Dimensioning and tolerancing per ASME Y14.5M–1994.
B. This drawing is subject to change without notice.
C. Body dimensions do not include mold flash or protrusion not to exceed 0.006 (0,15).
D. Falls within JEDEC MS–013 variation AD.

DW (R–PDSO–G24) PLASTIC SMALL OUTLINE

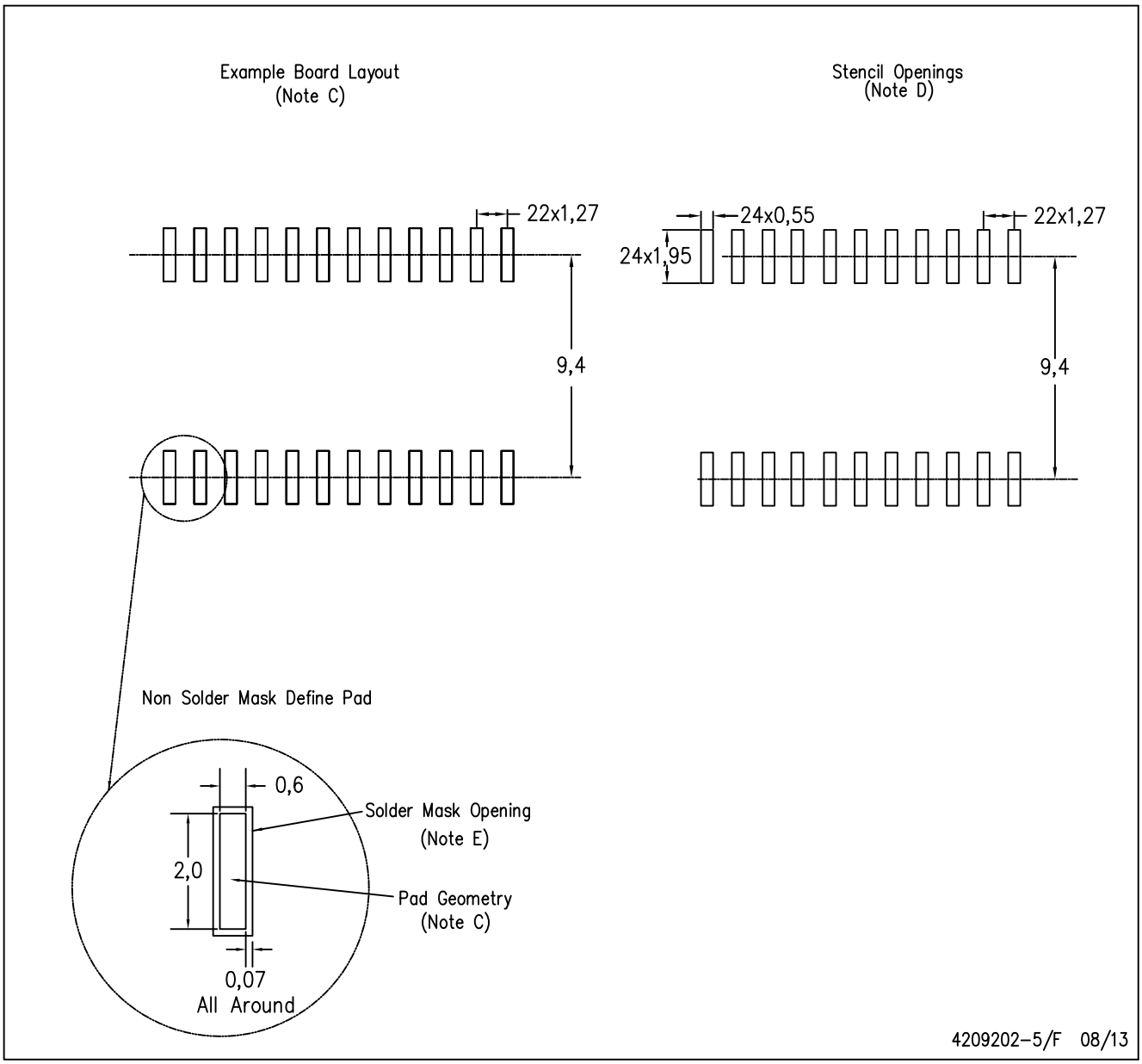

NOTES:
A. All linear dimensions are in millimeters.
B. This drawing is subject to change without notice.
C. Refer to IPC7351 for alternate board design.
D. Laser cutting apertures with trapezoidal walls and also rounding corners will offer better paste release. Customers should contact their board assembly site for stencil design recommendations. Refer to IPC–7525
E. Customers should contact their board fabrication site for solder mask tolerances between and around signal pads.

DB (R-PDSO-G)** **PLASTIC SMALL-OUTLINE**

28 PINS SHOWN

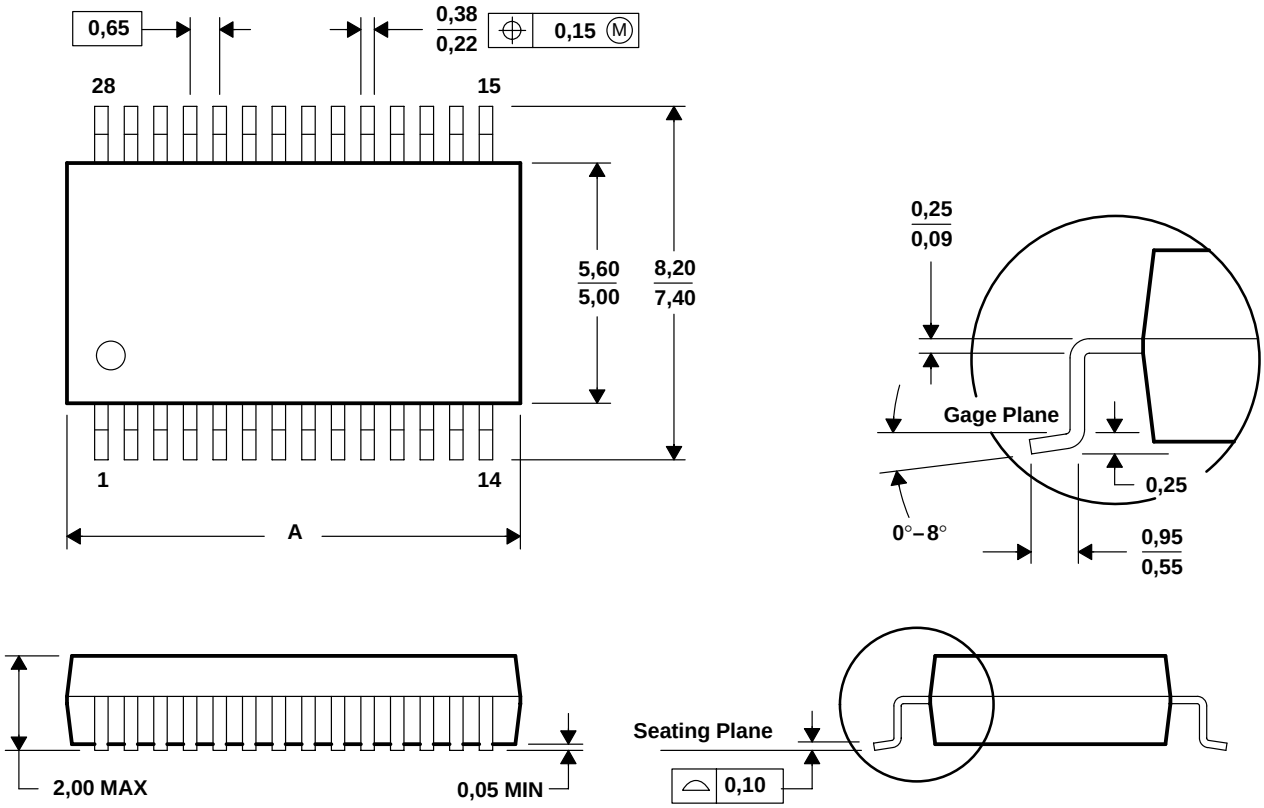

DIM \ PINS **	14	16	20	24	28	30	38
A MAX	6,50	6,50	7,50	8,50	10,50	10,50	12,90
A MIN	5,90	5,90	6,90	7,90	9,90	9,90	12,30

4040065 /E 12/01

NOTES: A. All linear dimensions are in millimeters.
B. This drawing is subject to change without notice.
C. Body dimensions do not include mold flash or protrusion not to exceed 0,15.
D. Falls within JEDEC MO-150

IMPORTANT NOTICE AND DISCLAIMER

TI PROVIDES TECHNICAL AND RELIABILITY DATA (INCLUDING DATA SHEETS), DESIGN RESOURCES (INCLUDING REFERENCE DESIGNS), APPLICATION OR OTHER DESIGN ADVICE, WEB TOOLS, SAFETY INFORMATION, AND OTHER RESOURCES “AS IS” AND WITH ALL FAULTS, AND DISCLAIMS ALL WARRANTIES, EXPRESS AND IMPLIED, INCLUDING WITHOUT LIMITATION ANY IMPLIED WARRANTIES OF MERCHANTABILITY, FITNESS FOR A PARTICULAR PURPOSE OR NON-INFRINGEMENT OF THIRD PARTY INTELLECTUAL PROPERTY RIGHTS.

These resources are intended for skilled developers designing with TI products. You are solely responsible for (1) selecting the appropriate TI products for your application, (2) designing, validating and testing your application, and (3) ensuring your application meets applicable standards, and any other safety, security, regulatory or other requirements.

These resources are subject to change without notice. TI grants you permission to use these resources only for development of an application that uses the TI products described in the resource. Other reproduction and display of these resources is prohibited. No license is granted to any other TI intellectual property right or to any third party intellectual property right. TI disclaims responsibility for, and you will fully indemnify TI and its representatives against, any claims, damages, costs, losses, and liabilities arising out of your use of these resources.

TI’s products are provided subject to TI’s Terms of Sale or other applicable terms available either on ti.com or provided in conjunction with such TI products. TI’s provision of these resources does not expand or otherwise alter TI’s applicable warranties or warranty disclaimers for TI products.

TI objects to and rejects any additional or different terms you may have proposed.

Mailing Address: Texas Instruments, Post Office Box 655303, Dallas, Texas 75265
Copyright © 2022, Texas Instruments Incorporated