AFE030 电力线通信模拟前端

1 特性

- 具有热保护和过流保护的集成式电力线驱动器
- 符合 EN50065-1 标准
- 与 AFE031 之间具有引脚兼容性
- 大输出摆幅：1A 电流时为 $13V_{PP}$（电源电压为 15V）
- 低功耗：15mW（接收模式）
- 可编程 Tx 和 Rx 滤波器
- 支持 EN50065 CENELEC 频带 A、B、C、D
- 支持OFDM，FSK，和S-FSK
- 支持IEC61334
- 接收灵敏度：$20\mu V_{RMS}$，典型值
- 可编程 Tx/Rx 增益控制
- 四线串行外设接口
- 两个集成式过零检测器
- 双线收发器缓冲器
- 封装方式：48 引脚四方扁平无引线 (QFN) PowerPAD™
- 扩展结温范围：–40°C 至 +125°C

2 应用

- 电子仪表
- 照明
- 太阳能
- 试验线路

3 说明

AFE030 是一款低成本、集成式电力线通信 (PLC) 模拟前端 (AFE) 器件，能够在数字信号处理器 (DSP) 或微控制器的控制下，以容性或变压器耦合方式连接至电力线。该器件非常适合于驱动需要为无功负载提供高达 1A 电流的低阻抗线路。该集成式接收器能够检测低至 $20\mu V_{RMS}$ 的信号，并且支持各种增益选项以适应不同的输入信号条件。此单片集成电路可为要求严苛的电力线通信 应用提供高可靠性。

AFE030 发射功率放大器可由 7V 至 26V 电压范围的单电源供电。在最大输出电流情况下，宽输出摆幅可通过标称 15V 的电源提供 $12V_{PP}$ (I_{OUT} = 1A) 能力。该模拟和数字信号处理电路由 3.3V 单电源供电。

器件信息(1)

器件型号	封装	封装尺寸（标称值）
AFE030	VQFN (48)	7.00mm × 7.00mm

(1) 如需了解所有可用封装，请参阅数据表末尾的可订购产品附录。

方框图

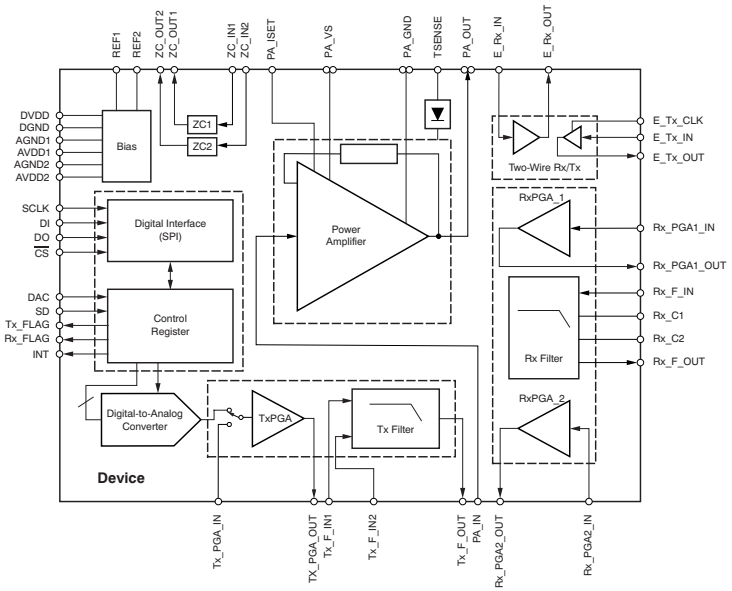

本文档旨在为方便起见，提供有关 TI 产品中文版本的信息，以确认产品的概要。 有关适用的官方英文版本的最新信息，请访问 www.ti.com，其内容始终优先。 TI 不保证翻译的准确性和有效性。 在实际设计之前，请务必参考最新版本的英文版本。

目录

1 特性 ... 1
2 应用 ... 1
3 说明 ... 1
4 修订历史记录 ... 2
5 说明（续） ... 3
6 **Pin Configuration and Functions** ... 4
7 **Specifications** ... 6
7.1 Absolute Maximum Ratings ... 6
7.2 ESD Ratings ... 6
7.3 Thermal Information ... 6
7.4 Electrical Characteristics: Transmitter (Tx), Tx_DAC ... 7
7.5 Electrical Characteristics: Transmitter (Tx), Tx_PGA ... 7
7.6 Electrical Characteristics: Transmitter (Tx), Tx_FILTER ... 8
7.7 Electrical Characteristics: Power Amplifier (PA) ... 9
7.8 Electrical Characteristics: Receiver (Rx), Rx PGA1 ... 10
7.9 Electrical Characteristics: Receiver (Rx), Rx Filter ... 11
7.10 Electrical Characteristics: Receiver (Rx), Rx PGA2 ... 12
7.11 Electrical Characteristics: Digital ... 13
7.12 Electrical Characteristics: Two-Wire Interface ... 14
7.13 Electrical Characteristics: Zero-Crossing Detector ... 14
7.14 Electrical Characteristics: Internal Bias Generator ... 15
7.15 Electrical Characteristics: Power Supply ... 15
7.16 Typical Characteristics ... 16
8 **Parameter Measurement Information** ... 19
8.1 Timing Requirements ... 19
8.2 Timing Diagrams ... 20
9 **Detailed Description** ... 22
9.1 Overview ... 22
9.2 Functional Block Diagram ... 22
9.3 Feature Description ... 23
9.4 Power Supplies ... 38
9.5 Pin Descriptions ... 39
9.6 Calibration Modes ... 41
9.7 Serial Interface ... 42
10 **Application and Implementation** ... 46
10.1 Application Information ... 46
10.2 Typical Application ... 46
10.3 Line-Coupling Circuit ... 48
10.4 Circuit Protection ... 48
10.5 Thermal Considerations ... 49
11 器件和文档支持 ... 53
11.1 器件支持 ... 53
11.2 文档支持 ... 53
11.3 接收文档更新通知 ... 53
11.4 社区资源 ... 54
11.5 商标 ... 54
11.6 静电放电警告 ... 54
11.7 Glossary ... 54

4 修订历史记录

注：之前版本的页码可能与当前版本有所不同。

Changes from Revision A (December 2011) to Revision B **Page**

- 已删除 删除了*封装/订购信息* 表；请参阅数据表末尾的*封装选项附录* ... 1
- Deleted *ESD specifications* from Absolute Maximum Ratings table. Moved to separate ESD Ratings table. ... 6
- Moved content from *Application and Implementation* ... 23
- Deleted references to Tx PGA calibration in *Calibration Modes* ... 41
- Deleted reference to Tx PGA calibration in Table 15 ... 44
- Deleted *Packaging/Mechanicals* section; information appended to end of data sheet ... 52

Changes from Original (December 2011) to Revision A **Page**

- 已更改 将产品状态更改为“生产数据” ... 1
- Added cross-reference to footnote 2 to *Output short-circuit (PA)* parameter in Absolute Maximum Ratings table ... 6

版权 © 2011–2019, Texas Instruments Incorporated

5 说明（续）

AFE030在过热和短路情况下收到内部保护。它还提供一个可调节电流限值。提供一个中断输出用于标示电流限值和热界限。还有一个关断引脚，此引脚用于快速将此器件置于最低功率的状态下。通过此四线制串行外设接口，或者 SPI™，每一个功能块可以开启或者关闭以优化功率耗散。

AFE030采用耐热增强型，表面贴装PowerPAD封装方式(QFN-48)。额定工作拓展工业结温范围为–40°C至+125°C。

Copyright © 2011–2019, Texas Instruments Incorporated

6 Pin Configuration and Functions

RGZ Package
48-Pin VQFN
Top View

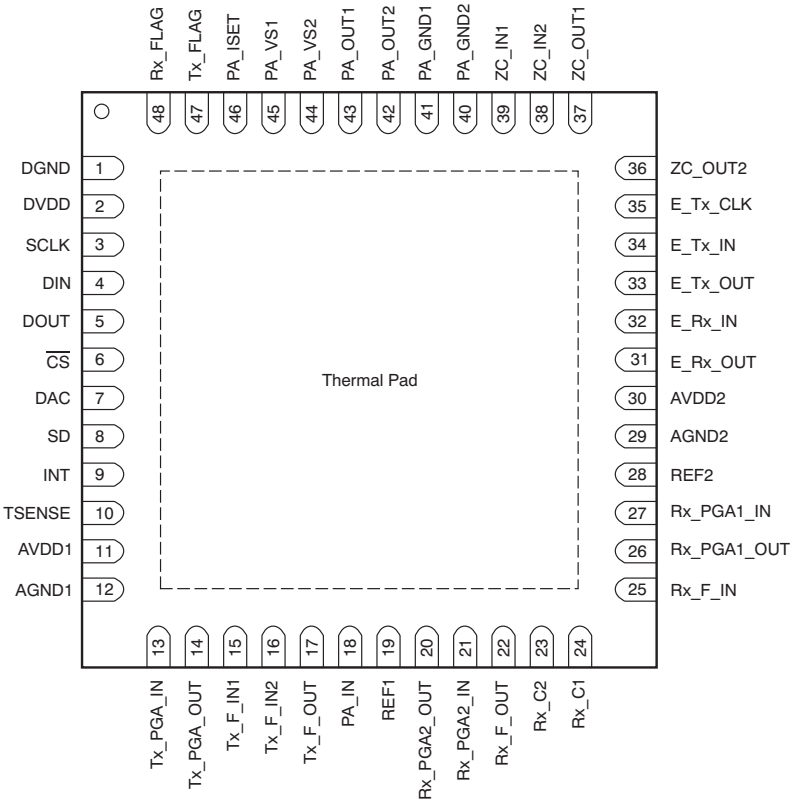

Pin Functions

PIN		I/O	DESCRIPTION
NAME	NO.		
AGND1	12	—	Analog ground
AGND2	29	—	Analog ground
AVDD1	11	—	Analog supply
AVDD2	30	—	Analog supply
$\overline{CS}$	6	—	SPI digital chip select
DAC	7	—	DAC mode select
DIN	4	I	SPI digital input
DGND	1	—	Digital ground
DOUT	5	O	SPI digital output
DVDD	2	—	Digital supply
E_Rx_IN	32	I	Two-wire receiver input
E_Rx_OUT	31	O	Two-wire receiver output
E_Tx_CLK	35	I	Two-wire transmitter clock input
E_Tx_IN	34	I	Two-wire transmitter input
E_Tx_OUT	33	O	Two-wire transmitter output
INT	9	—	Interrupt on overcurrent or thermal limit
PA_GND1	41	—	Power amplifier ground
PA_GND2	40	—	Power amplifier ground

Copyright © 2011–2019, Texas Instruments Incorporated

Pin Functions (continued)

PIN		I/O	DESCRIPTION
NAME	NO.		
PA_IN	18	I	Power amplifier input
PA_ISET	46	—	Power amplifier current limit set
PA_OUT1	43	O	Power amplifier output
PA_OUT2	42	O	Power amplifier output
PA_VS1	45	—	Power amplifier supply
PA_VS2	44	—	Power amplifier supply
REF1	19	—	Power amplifier noise reducing capacitor
REF2	28	—	Receiver noise reducing capacitor
Rx_C1	24	—	Receiver external frequency select
Rx_C2	23	—	Receiver external frequency select
Rx_F_IN	25	I	Receiver filter input
Rx_F_OUT	22	O	Receiver filter output
Rx_FLAG	48	—	Receiver ready flag
Rx PGA1_IN	27	I	Receiver PGA(1) input
Rx PGA1_OUT	26	O	Receiver PGA(1) output
Rx PGA2_IN	21	I	Receiver PGA(2) input
Rx PGA2_OUT	20	O	Receiver PGA(2) output
SCLK	3	—	SPI serial clock
SD	8	—	System shutdown
TSENSE	10	—	Temp sensing diode (anode)
Tx_F_IN1	15	I	Transmit filter input 1
Tx_F_IN2	16	I	Transmit filter input 2
Tx_F_OUT	17	O	Transmit filter output
Tx_FLAG	47	—	Transmitter ready flag
Tx_PGA_IN	13	I	Transmit PGA input
Tx_PGA_OUT	14	O	Transmit PGA output
ZC_IN1	39	I	Zero-crossing detector input
ZC_IN2	38	I	Zero-crossing detector input
ZC_OUT1	37	O	Zero-crossing detector output
ZC_OUT2	36	O	Zero-crossing detector output

Copyright © 2011–2019, Texas Instruments Incorporated

7 Specifications

7.1 Absolute Maximum Ratings

over operating free-air temperature range (unless otherwise noted)(1)

			MIN	MAX	UNIT
Voltage	Supply voltage, PA_V_S			26	V
	Signal input terminals	Pins 18,19(2)	PA_GND – 0.4	PA_V_S + 0.4	
		Pins 13, 15, 16, 21, 23-25, 28, 32, 34, 35, 38, 39, 46(2)	AGND – 0.4	AV_{DD} + 0.4	
		Pins 3, 4, 6, 7, 8(2)	DGND – 0.4	DV_{DD} + 0.4	
	Voltage limit	Pin 27	–10	10	
	Supply voltage	AV_{DD}		5.5	
		DV_{DD}		5.5	
Current	Signal input terminals	Pins 18,19(2)	–10	10	mA
		Pins 13, 15, 16, 21, 23-25, 28, 32, 34, 35, 38, 39, 46(2)	–10	10	
		Pins 3, 4, 6, 7, 8(2)	–10	10	
	Signal output terminals	Pins 5, 9, 14, 17, 20, 22, 26, 31, 33, 36, 37, 47, 48(2)	Continuous		
	Output short circuit (PA)	Pins 42, 43	Continuous		
	Current limit	Pin 10(2)(3)(4)	–10	10	
Temperature	Operating, T_A(4)		–40	150	°C
	Junction, T_J			150	
	Storage, T_{stg}		–55	125	

(1) Stresses above these ratings may cause permanent damage. Exposure to absolute maximum conditions for extended periods may degrade device reliability. These are stress ratings only, and functional operation of the device at these or any other conditions beyond those specified is not implied.
(2) Input terminals are diode-clamped to the power-supply rails. Input signals that can swing more than 0.4 V beyond the supply rails should be current limited to 10 mA or less. Output terminals are diode-clamped to the power-supply rails. Output signals that can swing more than 0.4 V beyond the supply rails should be current limited to 10 mA or less.
(3) Short-circuit to ground.
(4) The AFE030 automatically goes into shutdown at junction temperatures that exceed 165°C.

7.2 ESD Ratings

		VALUE	UNIT
$V_{(ESD)}$ Electrostatic discharge	Human-body model (HBM), per ANSI/ESDA/JEDEC JS-001(1)	3000	V
	Charged-device model (CDM), per JEDEC specification JESD22-C101(2)	500	

(1) JEDEC document JEP155 states that 500-V HBM allows safe manufacturing with a standard ESD control process.
(2) JEDEC document JEP157 states that 250-V CDM allows safe manufacturing with a standard ESD control process.

7.3 Thermal Information

THERMAL METRIC(1)		AFE030 RGZ (VQFN) 48 PINS	UNIT
$R_{\theta JA}$	Junction-to-ambient thermal resistance	27.8	°C/W
$R_{\theta JC(top)}$	Junction-to-case (top) thermal resistance	12.1	°C/W
$R_{\theta JB}$	Junction-to-board thermal resistance	7.5	°C/W
ψ_{JT}	Junction-to-top characterization parameter	0.4	°C/W
ψ_{JB}	Junction-to-board characterization parameter	7.4	°C/W
$R_{\theta JC(bot)}$	Junction-to-case (bottom) thermal resistance	1.7	°C/W

(1) For more information about traditional and new thermal metrics, see the *Semiconductor and IC Package Thermal Metrics* application report.

Copyright © 2011–2019, Texas Instruments Incorporated

7.4 Electrical Characteristics: Transmitter (Tx), Tx_DAC

At T_J = 25°C, PA_V_S = 16 V, V_{AVDD} = V_{DVDD} = 3.3 V, and PA_ISET (pin 46) connected to ground, unless otherwise noted.

PARAMETER		TEST CONDITIONS	MIN	TYP	MAX	UNIT
	Output range		GND + 0.1		AV_{DD} – 0.1	V
	Resolution	1024 steps, 10-bit DAC		3.2		mV
THD	Total harmonic distortion at 62.5 kHz (1)	Second-harmonic distortion		–73		dB
		Third-harmonic distortion		–56		dB
		Fourth-harmonic distortion		–94		dB
	Data rate			1.5		MSPS

(1) Total harmonic distortion measured at output of Tx_PGA configured in a gain of 1 V/V with an amplitude of 3 V_{PP}, at a 1-MHz sample rate.

7.5 Electrical Characteristics: Transmitter (Tx), Tx_PGA

At T_J = 25°C, PA_V_S = 16 V, V_{AVDD} = V_{DVDD} = 3.3 V, and PA_ISET (pin 46) connected to ground, unless otherwise noted.

PARAMETER		TEST CONDITIONS	MIN	TYP	MAX	UNIT
INPUT						
	Input voltage range		GND – 0.1		AV_{DD} + 0.1	V
R_I	Input resistance	G = 1 V/V		58		kΩ
		G = 0.707 V/V		68		kΩ
		G = 0.5 V/V		77		kΩ
		G = 0.25 V/V		92		kΩ
FREQUENCY RESPONSE						
BW	Bandwidth	DAC mode enabled				
		G = 1 V/V		8		MHz
		G = 0.707 V/V		9		MHz
		G = 0.5 V/V		10		MHz
		G = 0.25 V/V		12		MHz
OUTPUT						
V_O	Voltage output swing from AGND or AV_{DD}	R_{LOAD} = 10 kΩ, connected to AV_{DD}/2		10	100	mV
I_O	Maximum continuous current, dc	Sourcing		25		mA
		Sinking		25		mA
R_O	Output resistance	f = 100 kHz		1		Ω
GAIN						
	Gain error	For all gains	–1%	±0.1%	+1%	
	Gain error drift	T_J = –40°C to +125°C		6		ppm/°C

Copyright © 2011–2019, Texas Instruments Incorporated

7.6 Electrical Characteristics: Transmitter (Tx), Tx_FILTER

At T_J = 25°C, PA_V_S = 16 V, V_{AVDD} = V_{DVDD} = 3.3 V, and PA_ISET (pin 46) connected to ground, unless otherwise noted.

PARAMETER		TEST CONDITIONS	MIN	TYP	MAX	UNIT
INPUT						
	Input voltage range		GND – 0.1		AV_{DD} + 0.1	V
R_I	Input resistance (Tx_F_IN1 and Tx_F_IN2)			43		kΩ
FREQUENCY RESPONSE						
	CENELEC A Mode					
	Passband frequency	–3 dB		95		kHz
	Stop band attenuation		–50	–60		dB
	Stop band frequency			910		kHz
	Filter gain			0		dB
CENELEC B/C/D MODES						
	Passband frequency	–3 dB		145		kHz
	Stop band attenuation		–50	–60		dB
	Stop band frequency			870		kHz
	Filter gain			0		dB
OUTPUT						
V_O	Voltage output swing from AGND or AV_{DD}	R_{LOAD} = 10 kΩ, connected to AV_{DD}/2		10	100	mV
I_O	Maximum continuous current, dc	Sourcing		25		mA
		Sinking		25		mA
R_O	Output resistance	f = 100 kHz		1		Ω
TRANSMITTER NOISE						
	Integrated noise at PA output(1)	CENELEC Band A (40 kHz to 90 kHz)	Noise-reducing capacitor = 1 nF from pin 19 to ground	435		μV_{RMS}
		CENELEC Bands B/C/D (95 kHz to 140 kHz)	Noise-reducing capacitor = 1 nF from pin 19 to ground	460		μV_{RMS}

(1) Includes DAC, Tx_PGA, Tx_Filter, PA, and REF1 bias generator.

Copyright © 2011–2019, Texas Instruments Incorporated

7.7 Electrical Characteristics: Power Amplifier (PA)

At T_J = 25°C, PA_V_S = 16 V, V_{AVDD} = V_{DVDD} = 3.3 V, and PA_ISET (pin 46) connected to ground, unless otherwise noted.

PARAMETER			TEST CONDITIONS	MIN	TYP	MAX	UNIT
INPUT							
	Input voltage range			GND – 0.1		PA_V_S + 0.1	V
R_I	Input resistance				20		kΩ
FREQUENCY RESPONSE							
BW	Bandwidth		I_{LOAD} = 0		670		kHz
SR	Slew rate		10-V step		19		V/µs
	Full-power bandwidth		V_{OUT} = 10 V_{PP}		300		kHz
	AC PSRR		f = 50 kHz		14		dB
OUTPUT							
V_O	Voltage output swing	From PA_V_S	I_O = 300 mA, sourcing		0.3	1	V
			I_O = 1.0 A, sourcing		1	1.5	V
		From PA_Gnd	I_O = 300 mA, sinking		0.3	1	V
			I_O = 1.0 A, sinking		1	1.5	V
I_O	Maximum continuous current, dc		PA_ISET (pin 46) connected to ground	1.0			A
	Maximum peak current, ac		T_J = –40°C to +125°C, f = 50 kHz		1.0		A
R_O	Output resistance		I_O = 1.0 A		0.1		Ω
	PA disabled		Output impedance, f = 100 kHz, REF1 enabled		145 ll 120		kΩ ll pF
	Output current limit range				±0.4 to ±1.0		A
	Current limit equation			I_{LIM} = 20 k × [1.2 V/(R_{SET} + 15 kΩ)]			A
			Solved for R_{SET} (current limit)	R_{SET} = [(20 k × 1.2 V/I_{LIM}) – 15 kΩ]			Ω
GAIN (R_{LOAD} = 1 kΩ)							
G	Nominal gain				6.5		V/V
	Gain error			–1%	0.1%	+1%	
	Gain error drift		T_J = –40°C to +125°C		±1		ppm/°C
TSENSE DIODE							
η	Diode ideality factor				1.033		
THERMAL SHUTDOWN							
	Junction temperature at shutdown				+165		°C
	Hysteresis				20		°C
	Return to normal operation				+145		°C

Copyright © 2011–2019, Texas Instruments Incorporated

7.8 Electrical Characteristics: Receiver (Rx), Rx PGA1

At T_J = 25°C, PA_V_S = 16 V, V_{AVDD} = V_{DVDD} = 3.3 V, and PA_ISET (pin 46) connected to ground, unless otherwise noted.

PARAMETER		TEST CONDITIONS	MIN	TYP	MAX	UNIT
INPUT						
	Input voltage range			10		V_{PP}
R_I	Input resistance	G = 2 V/V		10		kΩ
		G = 1 V/V		15		kΩ
		G = 0.5 V/V		20		kΩ
		G = 0.25 V/V		24		kΩ
FREQUENCY RESPONSE						
BW	Bandwidth	G = 2 V/V		6		MHz
		G = 1 V/V		10		MHz
		G = 0.5 V/V		13		MHz
		G = 0.25 V/V		15		MHz
OUTPUT						
V_O	Voltage output swing from AGND or AV_{DD}	R_{LOAD} = 6 kΩ, connected to AV_{DD}/2		10	100	mV
I_O	Maximum continuous current, dc	Sourcing		25		mA
		Sinking		25		mA
R_O	Output resistance	G = 1, f = 100 kHz		1		Ω
GAIN						
	Gain error	G = 0.25 V/V	–1%	±0.1%	+1%	
		G = 0.5 V/V	–1%	±0.1%	+1%	
		G = 1 V/V	–1%	±0.1%	+1%	
		G = 2 V/V	–2%	±0.2%	+2%	
	Gain error drift	T_J = –40°C to +125°C		1		ppm/°C

Copyright © 2011–2019, Texas Instruments Incorporated

7.9 Electrical Characteristics: Receiver (Rx), Rx Filter

At T_J = 25°C, PA_V_S = 16 V, V_{AVDD} = V_{DVDD} = 3.3 V, and PA_ISET (pin 46) connected to ground, unless otherwise noted.

PARAMETER		TEST CONDITIONS	MIN	TYP	MAX	UNIT
INPUT						
	Input voltage range		GND – 0.1		AV_{DD} + 0.1	V
R_{IN}	Input resistance			6		kΩ
FREQUENCY RESPONSE, CENELEC A MODE (Rx_C1 = 680 pF, Rx_C2 = 680 pF)						
	Passband frequency	–3 dB		90		kHz
	Stop band attentuation		–25	–33		dB
	Stop band frequency			270		kHz
	Filter gain			0		dB
FREQUENCY RESPONSE, CENELEC B/C/D MODES (Rx_C1 = 270 pF, Rx_C2 = 560 pF)						
	Passband frequency	–3 dB		145		kHz
	Stop band attentuation		–25	–35		dB
	Stop band frequency			350		kHz
	Filter gain			0		dB
OUTPUT						
V_O	Voltage output swing from AGND or AV_{DD}	R_{LOAD} = 10 kΩ, connected to AV_{DD}/2		10	100	mV
I_O	Maximum continuous current, dc	Sourcing		25		mA
		Sinking		25		mA
R_O	Output resistance	f = 100 kHz		5		Ω

Copyright © 2011–2019, Texas Instruments Incorporated

7.10 Electrical Characteristics: Receiver (Rx), Rx PGA2

At T_J = 25°C, PA_V_S = 16 V, V_{AVDD} = V_{DVDD} = 3.3 V, and PA_ISET (pin 46) connected to ground, unless otherwise noted.

PARAMETER		TEST CONDITIONS	MIN	TYP	MAX	UNIT
INPUT						
	Input voltage range		GND – 0.1		AV_{DD} + 0.1	V
R_I	Input impedance	G = 64 V/V		1.7		kΩ
		G = 16 V/V		6.3		kΩ
		G = 4 V/V		21		kΩ
		G = 1 V/V		53		kΩ
FREQUENCY RESPONSE						
BW	Bandwidth	G = 64 V/V		300		kHz
		G = 16 V/V		800		kHz
		G = 4 V/V		1.4		MHz
		G = 1 V/V		4		MHz
OUTPUT						
V_O	Voltage output swing from AGND or AV_{DD}	R_{LOAD} = 10 kΩ, connected to AV_{DD}/2		10	100	mV
I_O	Maximum continuous current, dc	Sourcing		25		mA
		Sinking		25		mA
R_O	Output impedance	G = 1, f = 100 kHz		1		Ω
GAIN						
	Gain error	G = 1 V/V	–2%	±1%	2%	
		G = 4 V/V	–2%	±1%	2%	
		G = 16 V/V	–2%	±1%	2%	
		G = 64 V/V	–4%	±1%	4%	
	Gain error drift	T_J = –40°C to +125°C		6		ppm/°C
Rx SENSITIVITY						
	Integrated noise, RTI(1)	CENELEC Band A (40 kHz to 90 kHz)	Noise-reducing capacitor = 1 µF from pin 28 to ground	14		$µV_{RMS}$
		CENELEC Bands B/C/D (95 kHz to 140 kHz)	Noise-reducing capacitor = 1 µF from pin 28 to ground	11		$µV_{RMS}$

(1) Includes Rx PGA1, Rx_Filter, Rx PGA2, and REF2 bias generator.

Copyright © 2011–2019, Texas Instruments Incorporated

7.11 Electrical Characteristics: Digital

At T_J = 25°C, PA_V_S = 16 V, V_{AVDD} = V_{DVDD} = 3.3 V, and PA_ISET (pin 46) connected to ground, unless otherwise noted.

PARAMETER		CONDITIONS	MIN	TYP	MAX	UNIT
DIGITAL INPUTS (SCLK, DIN, $\overline{CS}$, DAC, SD)						
	Leakage input current	$0 \le V_{IN} \le DV_{DD}$	–1	0.01	1	µA
V_{IH}	High-level input voltage		0.7 × DV_{DD}			V
V_{IL}	Low-level input voltage				0.3 × DV_{DD}	V
	SD pin high	SD > 0.7 × DV_{DD}	AFE030 in shutdown			
	SD pin low	SD < 0.3 × DV_{DD}	AFE030 in normal operation			
	DAC pin high	DAC > 0.7 × DV_{DD}	SPI access to DAC Registers			
	DAC pin low	DAC < 0.3 × DV_{DD}	SPI access to Command and Data Registers			
DIGITAL OUTPUTS (DO, ZC_OUT)						
V_{OH}	High-level output voltage	I_{OH} = 3 mA	DV_{DD} – 0.4		DV_{DD}	V
V_{OL}	Low-level output voltage	I_{OL} = –3 mA	GND		GND + 0.4	V
DIGITAL OUTPUTS (INT, Tx_Flag, Rx_Flag)						
I_{OH}	High-level output current	V_{OH} = 3.3 V			1	µA
V_{OL}	Low-level output voltage	I_{OL} = 4 mA			0.4	V
I_{OL}	Low-level output current	V_{OL} = 400 mV	4			mA
	INT pin high (open drain)	INT sink current < 1 µA	Normal operation			µs
	INT pin low (open drain)(1)	INT < 0.4 V	Indicates an interrupt has occurred			µs
	Tx_Flag high (open drain)	Tx_Flag sink current < 1 µA	Indicates Tx block is not ready			µs
	Tx_Flag low (open drain)	Tx_Flag < 0.4 V	Indicates Tx block is ready			µs
	Rx_Flag high (open drain)	Rx_Flag sink current < 1 µA	Indicates Rx block is not ready			µs
	Rx_Flag low (open drain)	Rx_Flag < 0.4 V	Indicates Rx block is ready			µs
DIGITAL TIMING						
	Gain select time			0.2		µs
	Shutdown mode, enable time			4.0		µs
	Shutdown mode, disable time			2.0		µs
	Power-on reset (POR) power-up time	$DV_{DD} \ge 2$ V		50		µs

(1) When an interrupt is detected (INT pin low), the contents of the I_Flag and T_Flag Registers can be read to determine the reason for the interrupt.

Copyright © 2011–2019, Texas Instruments Incorporated

7.12 Electrical Characteristics: Two-Wire Interface

At T_J = 25°C, PA_V_S = 16 V, V_{AVDD} = V_{DVDD} = 3.3 V, and PA_ISET (pin 46) connected to ground, unless otherwise noted.

PARAMETER		TEST CONDITIONS	MIN	TYP	MAX	UNIT
TWO-WIRE TRANSMITTER						
	Frequency range(1)			50		kHz
	Leakage input current (E_Tx_In, E_Tx_Clk)	$0 \le V_{IN} \le DV_{DD}$	–1	0.01	1	µA
INPUT LOGIC LEVELS (E_Tx_In, E_Tx_Clk)						
V_{IH}	High-level input voltage		$0.7 \times DV_{DD}$			V
V_{IL}	Low-level input voltage				$0.3 \times DV_{DD}$	V
OUTPUT LOGIC LEVELS (E_Tx_Out)						
V_{OH}	High-level output voltage	I_{OH} = 3 mA	AV_{DD} – 0.4		AV_{DD}	V
V_{OL}	Low-level output voltage	I_{OL} = –3 mA	GND		GND + 0.4	V
TWO-WIRE RECEIVER						
	Gain			–4.5		dB
	Frequency range			300		kHz
	Maximum sink current			25		mA
	Maximum source current			25		mA
	Input terminal offset	Referenced to V_{AVDD}/2	–100	10	100	mV
	Input impedance			78		kΩ

(1) The two-wire transmitter circuit is tested at Tx_CLK = 10 MHz.

7.13 Electrical Characteristics: Zero-Crossing Detector

At T_J = 25°C, PA_V_S = 16 V, V_{AVDD} = V_{DVDD} = 3.3 V, and PA_ISET (pin 46) connected to ground, unless otherwise noted.

			AFE030			
PARAMETER		TEST CONDITIONS	MIN	TYP	MAX	UNIT
	Input voltage range		AV_{DD} – 0.4		AV_{DD} + 0.4	V
	Input current range		–10		10	mA
	Input capacitance			3		pF
	Rising threshold		0.45	0.9	1.35	V
	Falling threshold		0.25	0.5	0.75	V
	Hysteresis		0.20	0.4	0.60	V
	Jitter	50 Hz, 240 V_{RMS}		10		ns

Copyright © 2011–2019, Texas Instruments Incorporated

7.14 Electrical Characteristics: Internal Bias Generator

At T_J = 25°C, PA_V_S = 16 V, V_{AVDD} = V_{DVDD} = 3.3 V, and PA_ISET (pin 46) connected to ground, unless otherwise noted.

PARAMETER		TEST CONDITIONS	MIN	TYP	MAX	UNIT
REF1 (Pin 19)						
	Bias voltage			PA_V_S/2		V
R_I	Input resistance			4		kΩ
	Turn-on time	Noise-reducing capacitor = 1 nF from pin 19 to ground		20		ms
	Turn-off time	Noise-reducing capacitor = 1 nF from pin 19 to ground		20		ms
REF2 (Pin 28)						
	Bias voltage			V_{AVDD}/2		V
R_I	Input resistance			4		kΩ
	Turn-on time	Noise-reducing capacitor = 1 µF from pin 28 to ground		20		ms
	Turn-off time	Noise-reducing capacitor = 1 µF from pin 28 to ground		20		ms

7.15 Electrical Characteristics: Power Supply

At T_J = 25°C, PA_V_S = 16 V, V_{AVDD} = V_{DVDD} = 3.3 V, and PA_ISET (pin 46) connected to ground, unless otherwise noted.

PARAMETER		TEST CONDITIONS	MIN	TYP	MAX	UNIT
OPERATING SUPPLY RANGE						
PA_V_S	Power amplifier supply voltage		7		24	V
DV_{DD}	Digital supply voltage		3.0		3.6	V
AV_{DD}	Analog supply voltage		3.0		3.6	V
QUIESCENT CURRENT SD pin low						
I_{QPA_VS}	Power amplifier current	I_O = 0 A, PA = On(1)		40	55	mA
		I_O = 0 A, PA = Off(2)		10		µA
I_{QDVDD}	Digital supply current	Tx configuration(3)		1.2		mA
		Rx configuration(4)		5		µA
		All blocks disabled(5)		5		µA
I_{QAVDD}	Analog supply current	Tx configuration(3)		2.8	3.7	mA
		Rx configuration(4)		3.6	5.3	mA
		All blocks disabled(5)		30		µA
SHUTDOWN (SD)						
PA_V_S	Power amplifier supply voltage	SD pin high		75	150	µA
DV_{DD}	Digital supply voltage	SD pin high		5	10	µA
AV_{DD}	Analog supply voltage	SD pin high		15	40	µA
TEMPERATURE						
	Specified range		–40		125	°C

(1) Enable1 Register = 00100011, Enable2 Register = 00001110.
(2) Enable1 Register = 00000100, Enable2 Register = 00000110.
(3) In the Tx configuration, the following blocks are enabled: DAC, Tx, PA, REF1, and REF2. All other blocks are disabled. Enable1 Register = 00100011, Enable2 Register = 00001110.
(4) In the Rx configuration, the following blocks are enabled: Rx, REF1, and REF2. All other blocks are disabled. Enable1 Register = 00000100, Enable2 Register = 00000110.
(5) Enable1 Register = 00000000, Enable2 Register = 00000000.

Copyright © 2011–2019, Texas Instruments Incorporated

7.16 Typical Characteristics

At T_J = 25°C, PA_V_S = 16 V, V_{AVDD} = V_{DVDD} = 3.3 V, and PA_ISET (pin 46) connected to ground, unless otherwise noted.

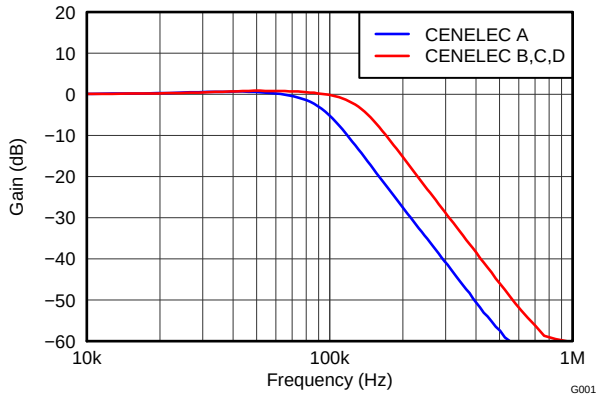

Figure 1. Tx Filter Gain vs Frequency

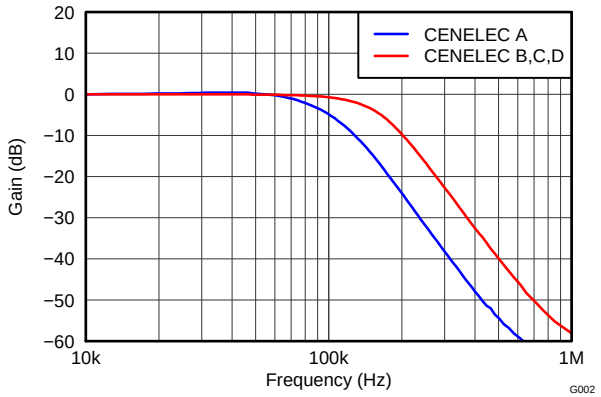

Figure 2. Rx Filter Gain vs Frequency

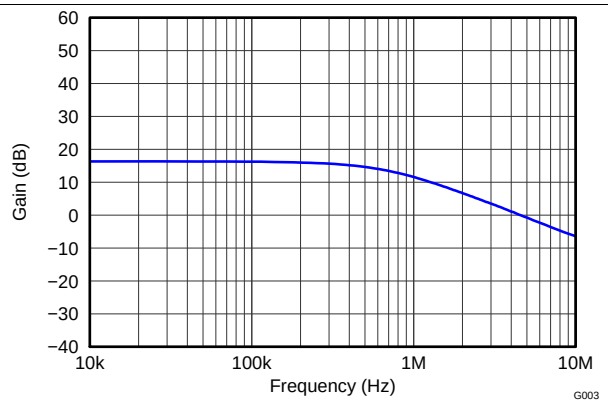

Figure 3. PA Gain vs Frequency

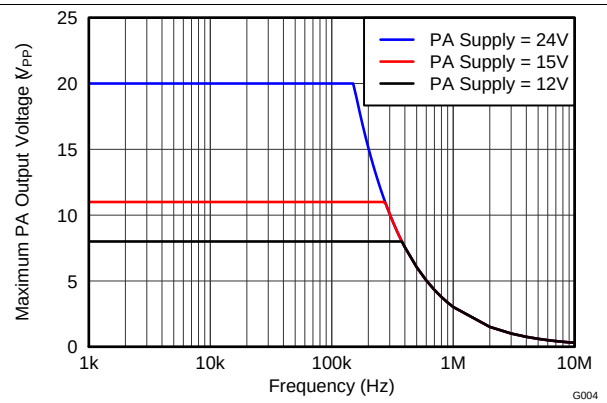

Figure 4. Maximum PA Output Voltage vs Frequency

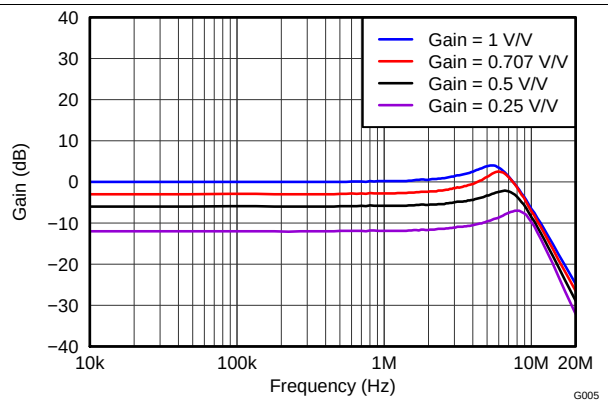

Figure 5. Tx PGA Gain vs Frequency

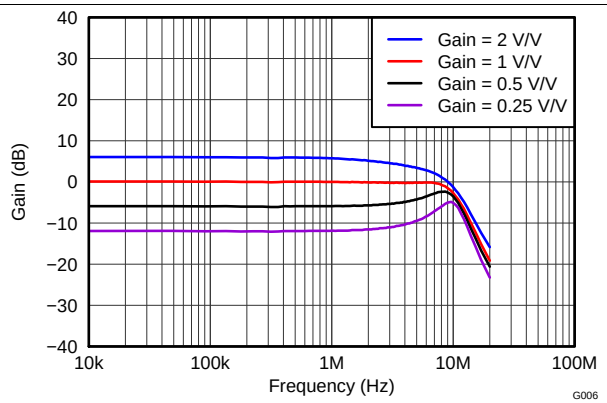

Figure 6. Rx PGA1 Gain vs Frequency

Copyright © 2011–2019, Texas Instruments Incorporated

Typical Characteristics (continued)

At T_J = 25°C, PA_V_S = 16 V, V_{AVDD} = V_{DVDD} = 3.3 V, and PA_ISET (pin 46) connected to ground, unless otherwise noted.

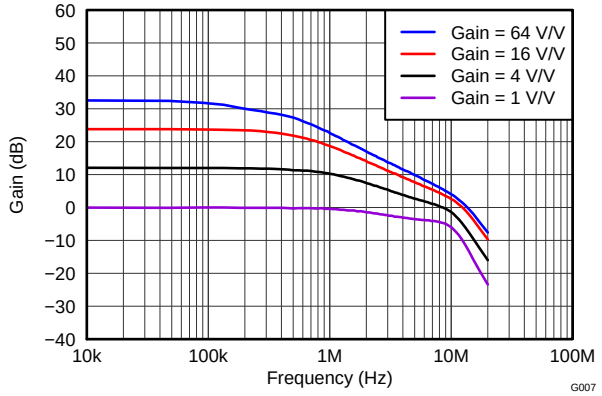

Figure 7. Rx PGA2 Gain vs Frequency

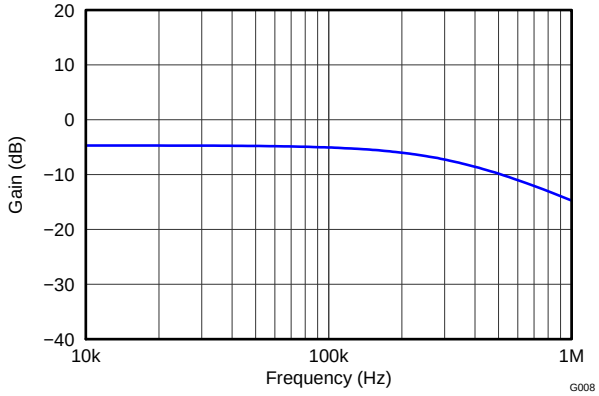

Figure 8. Two-Wire Receiver Gain vs Frequency

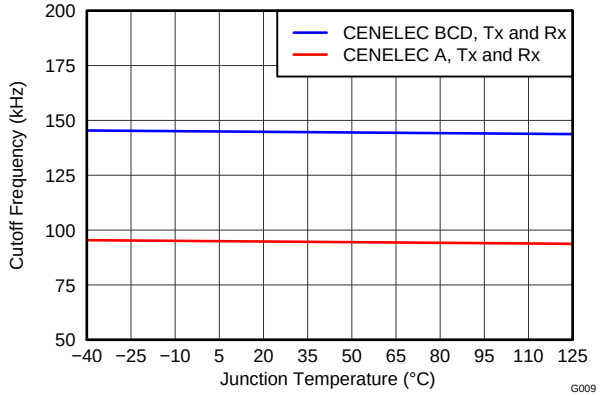

Figure 9. Filter Cutoff vs Temperature

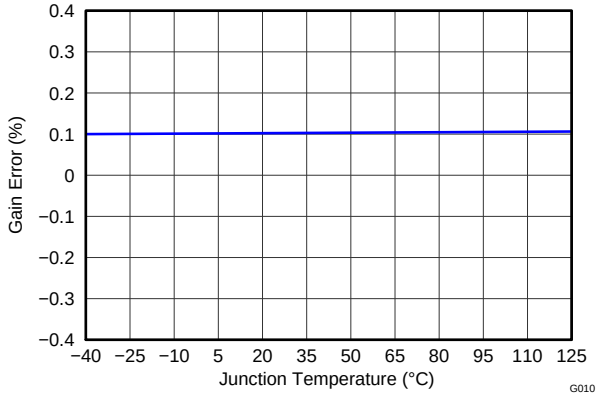

Figure 10. Tx PGA Gain Error vs Temperature

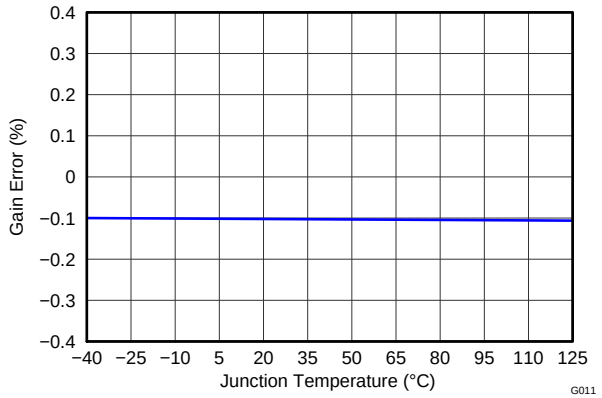

Figure 11. PA Gain Error vs Temperature

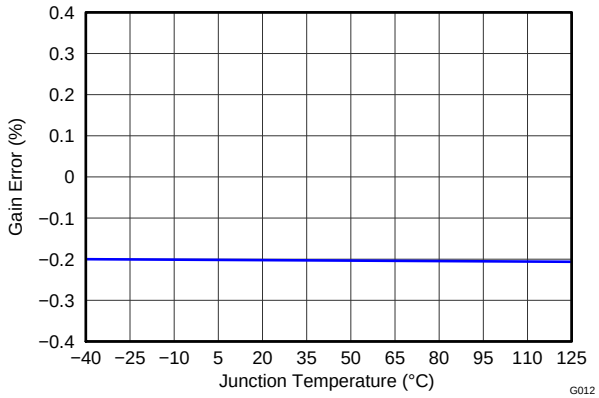

Figure 12. Rx PGA1 Gain Error vs Temperature

Copyright © 2011–2019, Texas Instruments Incorporated

Typical Characteristics (continued)

At T_J = 25°C, PA_V_S = 16 V, V_{AVDD} = V_{DVDD} = 3.3 V, and PA_ISET (pin 46) connected to ground, unless otherwise noted.

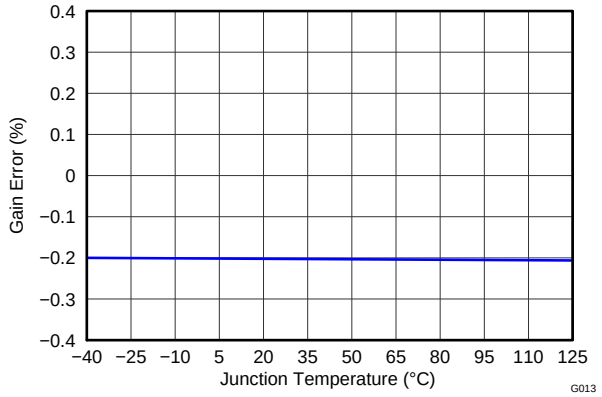

Figure 13. Rx PGA2 Gain Error vs Temperature

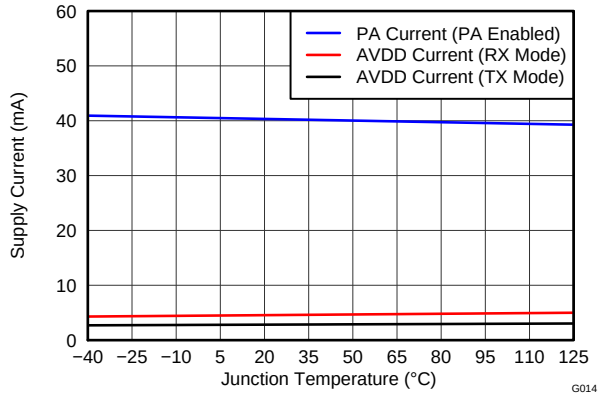

Figure 14. Quiescent Supply Current vs Temperature

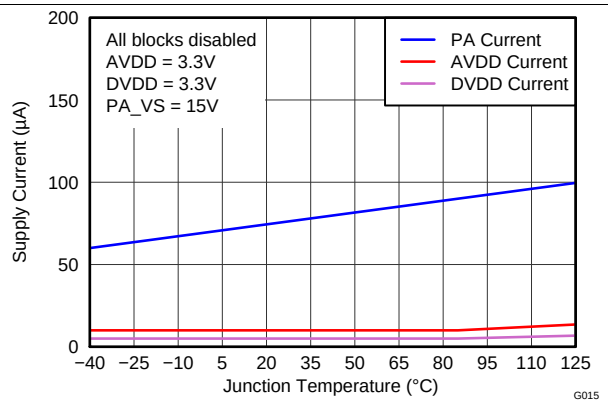

Figure 15. Supply Current (Shutdown) vs Temperature

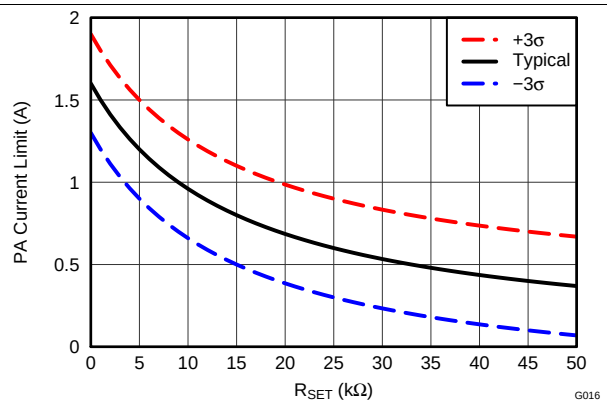

Figure 16. PA Current Limit vs R_{SET}

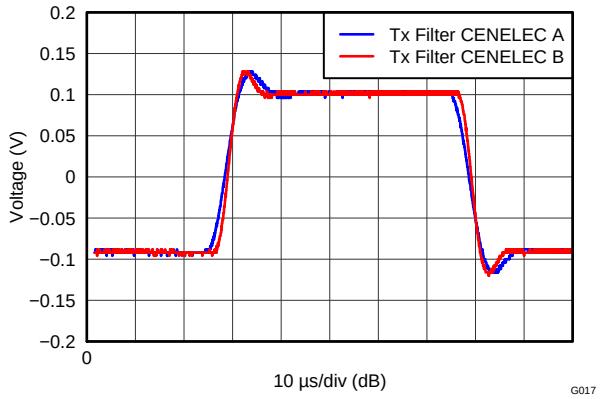

Figure 17. Tx Filter Pulse Response

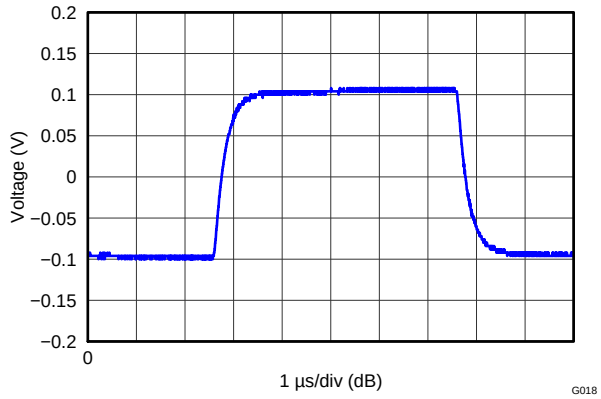

Figure 18. PA Pulse Response

Copyright © 2011–2019, Texas Instruments Incorporated

Typical Characteristics (continued)

At T_J = 25°C, PA_V_S = 16 V, V_{AVDD} = V_{DVDD} = 3.3 V, and PA_ISET (pin 46) connected to ground, unless otherwise noted.

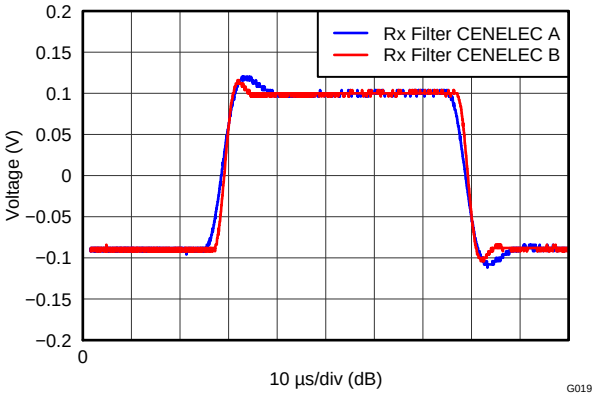

Figure 19. Rx Pulse Response

8 Parameter Measurement Information

8.1 Timing Requirements

Table 1. SPI Timing Requirements

PARAMETER		CONDITION	MIN	TYP	MAX	UNIT
Input capacitance				1		pF
Input rise/fall time	t_{RFI}	$\overline{CS}$, DIN, SCLK			2	ns
Output rise/fall time	t_{RFO}	DOUT			10	ns
$\overline{CS}$ high time	t_{CSH}	$\overline{CS}$	20			ns
SCLK edge to $\overline{CS}$ fall setup time	t_{CS0}		10			ns
$\overline{CS}$ fall to first SCLK edge setup time	t_{CSSC}		10			ns
SCLK frequency	f_{SCLK}				20	MHz
SCLK high time	t_{HI}		20			ns
SCLK low time	t_{LO}		20			ns
SCLK last edge to $\overline{CS}$ rise setup time	t_{SCCS}		10			ns
$\overline{CS}$ rise to SCLK edge setup time	t_{CS1}		10			ns
DIN setup time	t_{SU}		10			ns
DIN hold time	t_{HD}		5			ns
SCLK to DOUT valid propagation delay	t_{DO}				20	ns
$\overline{CS}$ rise to DOUT forced to Hi-Z	t_{soz}				20	ns

Copyright © 2011–2019, Texas Instruments Incorporated

8.2 Timing Diagrams

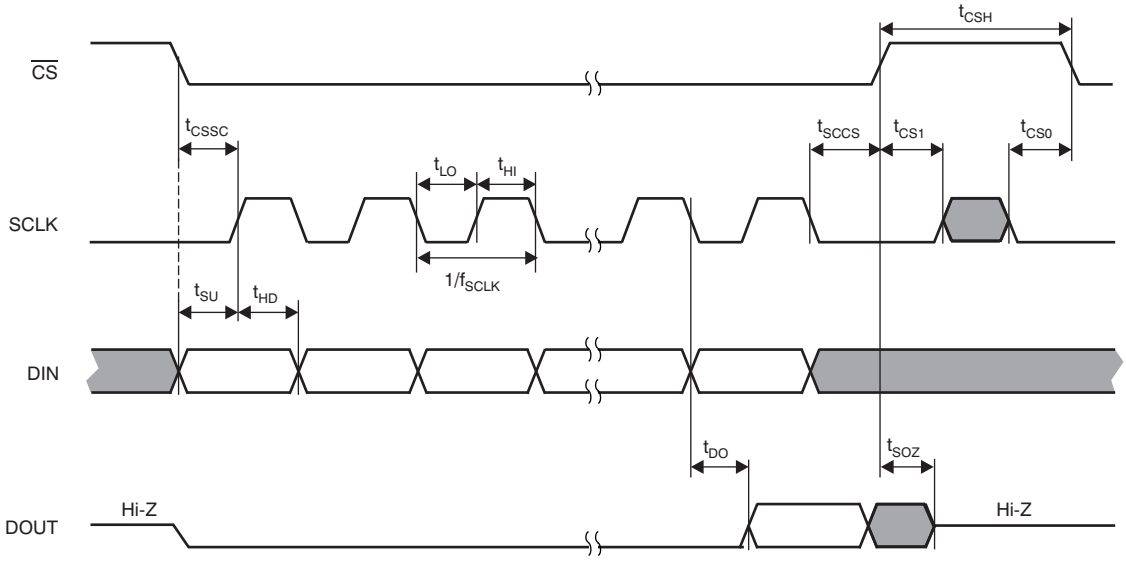

Figure 20. SPI Mode 0,0

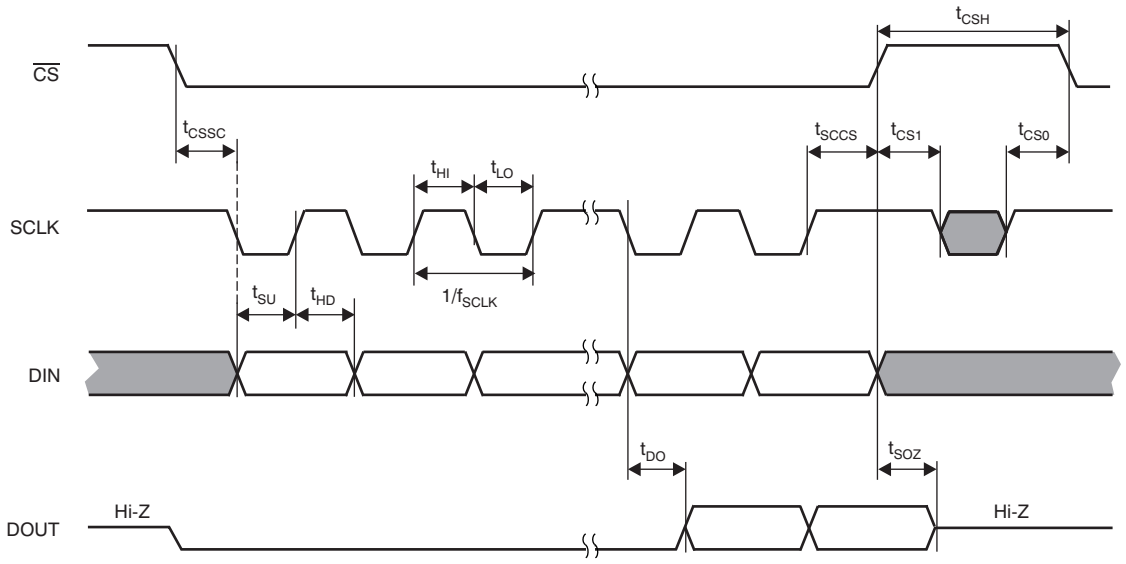

Figure 21. SPI Mode 1,1

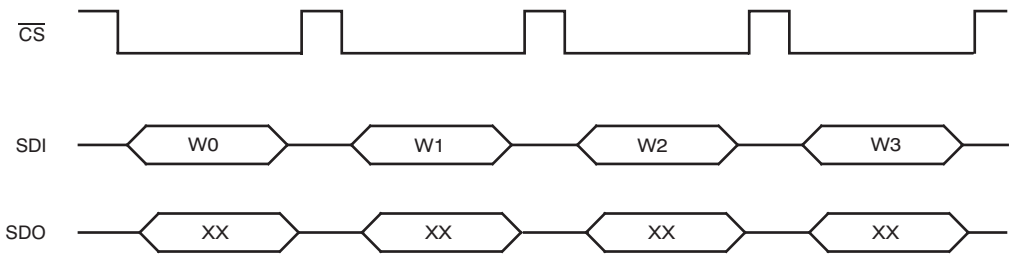

W - Command of Write Register *N*
XX - Don't care; undefined.

Figure 22. Write Operation in Stand-Alone Mode

Copyright © 2011–2019, Texas Instruments Incorporated

Timing Diagrams (continued)

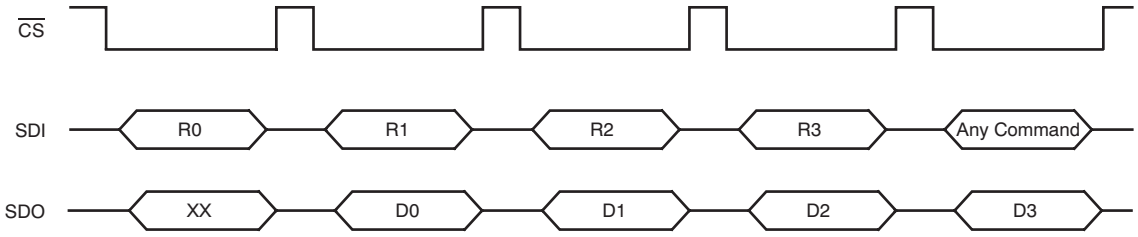

R - Command of Read Register *N* Read
D - Data from Register *N*
XX - Don't care; undefined.

Figure 23. Read Operation in Stand-Alone Mode

Copyright © 2011–2019, Texas Instruments Incorporated

9 Detailed Description

9.1 Overview

The AFE030 is an integrated powerline communication analog front-end (AFE) device built from a variety of functional blocks that work in conjunction with a microcontroller. The AFE030 provides the interface between the microcontroller and a line coupling circuit. The AFE030 delivers high performance and is designed to work with a minimum number of external components. Consisting of a variety of functional and configurable blocks, the AFE030 simplifies design efforts and reduces the time to market of many applications.

The AFE030 includes three primary functional blocks:

- Power Amplifier (PA)
- Transmitter (Tx)
- Receiver (Rx)

The AFE030 also consists of other support circuitry blocks that provide zero crossing detection, an additional two-wire communications channel, and power-saving biasing blocks (see the *Functional Block Diagram*). All of these functional blocks are digitally controlled by the microcontroller through the serial interface (SPI).

9.2 Functional Block Diagram

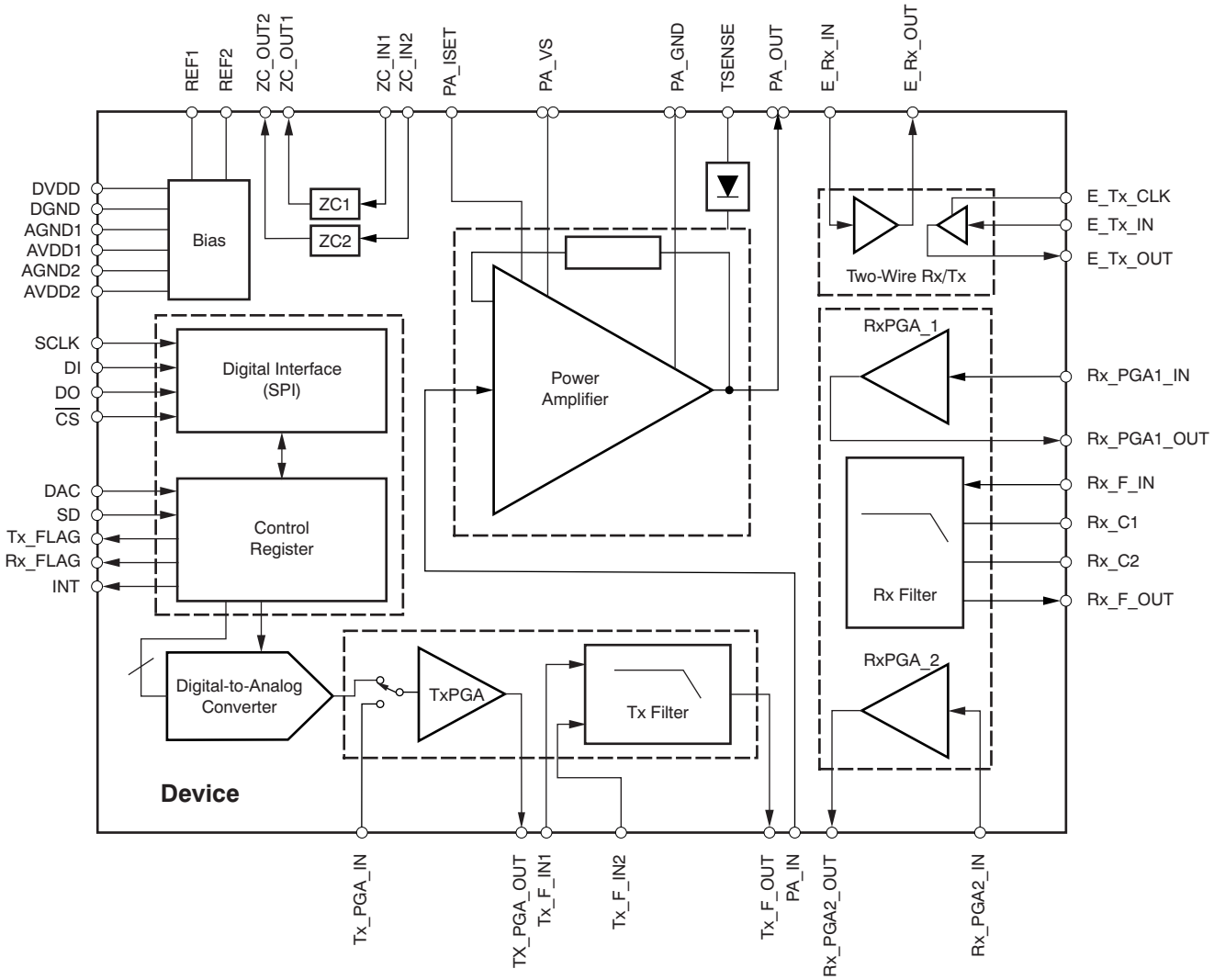

Copyright © 2011–2019, Texas Instruments Incorporated

9.3 Feature Description

9.3.1 PA Block

Figure 24 shows a typical powerline communications application system diagram. Table 2 is a complete list of the sections within the AFE030.

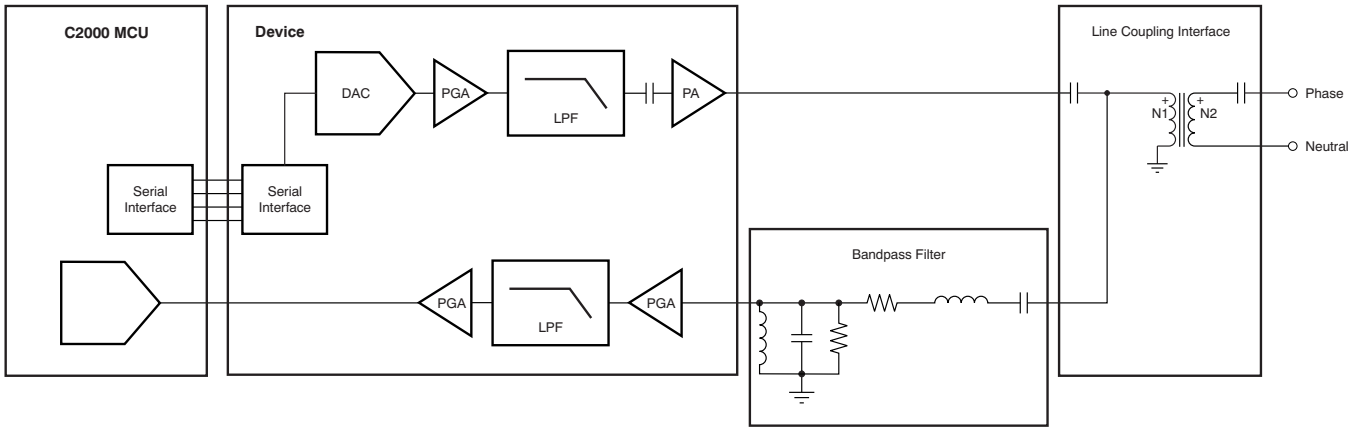

Figure 24. Typical Powerline Communications System Diagram

Table 2. Block Descriptions

BLOCK	DESCRIPTION
PA	The PA block includes the power amplifier and associated pedestal biasing circuitry
Tx	The Tx block includes the Tx_Filter and the Tx_PGA
Rx	The Rx block includes the Rx PGA1, the Rx Filter, and the Rx PGA2
ERx	The ER block includes the two-wire receiver
ETx	The ER block includes the two-wire transmitter
DAC	The DAC block includes a digital-to-analog converter
ZC	The ZC block includes both zero crossing detectors
REF1	The REF1 block includes the internal bias generator for the PA block
REF2	The REF2 block includes the internal bias generators for the Tx, Rx, ERx, and ETx blocks

The power amplifier (PA) block consists of a high slew rate, high-voltage, and high-current operational amplifier. The PA is configured with an inverting gain of 6.5 V/V, has a low-pass filter response, and maintains excellent linearity and low distortion. The PA is specified to operate from 7 V to 26 V and can deliver up to ±1 A of continuous output current over the specified junction temperature range of –40°C to +125°C. Figure 25 illustrates the PA block.

Copyright © 2011–2019, Texas Instruments Incorporated

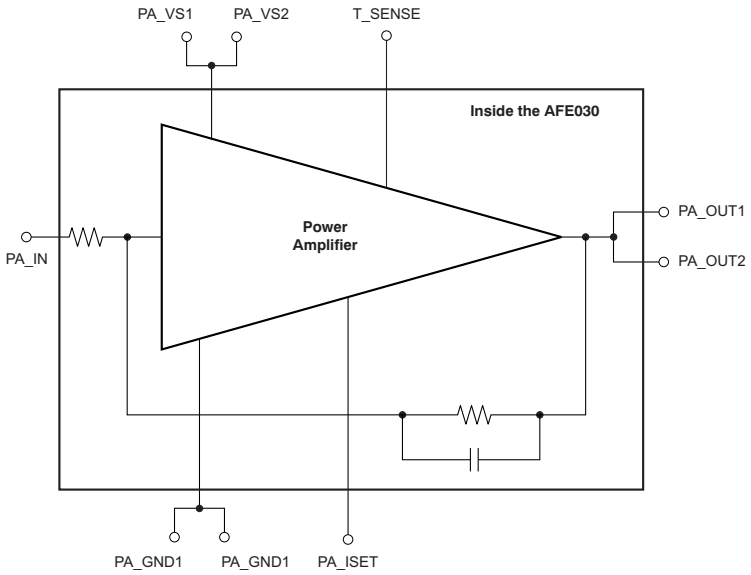

Figure 25. PA Block Equivalent Circuit

Connecting the PA in a typical PLC application requires only two additional components: an ac coupling capacitor, C_{IN}, and the current limit programming resistor, R_{SET}. Figure 26 shows the typical connections to the PA block.

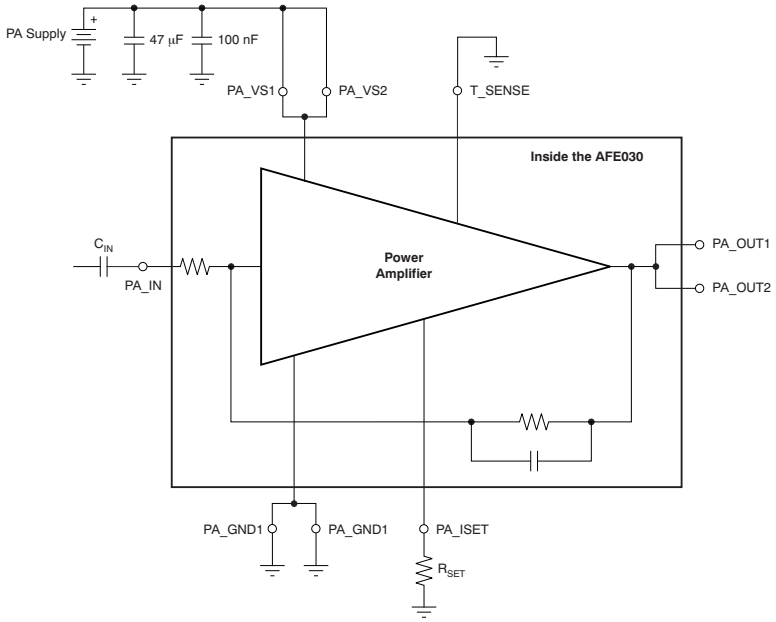

Figure 26. Typical Connections to the PA

The external capacitor, C_{IN}, introduces a single-pole, high-pass characteristic to the PA transfer function; combined with the inherent low-pass transfer function, this characteristic results in a passband response. The value of the high-pass cutoff frequency is determined by C_{IN} reacting with the input resistance of the PA circuit, and can be found from Equation 1:

$$C_{IN} = \frac{1}{(2 \times \pi \times 20\ k\Omega \times f_{HP})} \quad (1)$$

Where:

Copyright © 2011–2019, Texas Instruments Incorporated

- C_{IN} = external input capacitor
- f_{HP} = desired high-pass cutoff frequency

For example, setting C_{IN} to 3.3 nF results in a high-pass cutoff frequency of 2.4 kHz. The voltage rating for C_{IN} should be determined to withstand operation up to the PA power-supply voltage.

When the transmitter is not in use, the output can be disabled and placed into a high-impedance state by writing a '0' to the PA-OUT bit in the Enable2 Register. Additional power savings can be realized by shutting down the PA when not in use. Shutting down the PA for power savings is accomplished by writing a '0' to the PA bit in the Enable1 Register. Shutting down the PA also results in the PA output entering a high-impedance state. When the PA shuts down, it consumes only 2 mW of power.

The PA_ISET pin (pin 46) provides a resistor-programmable output current limit for the PA block. Equation 2 determines the value of the external R_{SET} resistor attached to this pin.

$$R_{SET} = \left(20\ k \times \frac{1.2\ V}{I_{LIM}}\right) - 15\ k\Omega \tag{2}$$

Where:

- R_{SET} = the value of the external resistor connected between pin 46 and ground.
- I_{LIM} = the value of the desired current limit for the PA.

Note that to ensure proper design margin with respect to manufacturing and temperature variations, a 30% increase in the value used in Equation 2 for I_{LIM} over the nominal value of I_{LIM} is recommended. See Figure 16, *PA Current Limit vs R_{SET}*. For maximum output current, PA_ISET (pin 46) may be connected directly to ground.

9.3.2 Tx Block

The Tx block consists of the Tx PGA and Tx Filter. The Tx PGA is a low-noise, high-performance, programmable gain amplifier. In DAC mode (where pin 7 is a logical '1' and Enable1 Register bit location 5 is a logical '1'), the Tx PGA operates as the internal digital-to-analog converter (DAC) output buffer with programmable gain. In PWM mode (where pin 7 is a logical '0' and Enable1 Register bit location 5 is a logical '0'), the Tx PGA operates as a stand-alone programmable gain amplifier. The Tx PGA gain is programmed through the serial interface. The Tx PGA gain settings are 0.25 V/V, 0.5 V/V, 0.707 V/V, and 1 V/V.

The Tx Filter is a unity-gain, fourth-order low-pass filter. The Tx Filter cutoff frequency is selectable between CENELEC A or CENELEC B, C, and D modes. The Control1 Register bit location 3 setting (CA CBCD) determines the cutoff frequency. Setting Control1 Register bit location 3 to '0' selects the CENELEC A band; setting Control1 Register bit location 3 to '1' selects CENELEC B, C, and D bands.

The AFE030 supports both DAC inputs or PWM inputs for the Tx signal path. DAC mode is recommended for best performance. In DAC mode, no external components in the Tx signal path are required to meet regulatory signal emissions requirements. When in DAC mode, the AFE030 accepts serial data from the microprocessor and writes that data to the internal DAC registers. When in DAC mode (where pin 7 is a logical '1' and Enable1 Register bit location 5 is a logical '1'), the Tx PGA output must be directly coupled to the Tx_FIN1 input and the unused Tx_FIN2 input must be grounded.

Copyright © 2011–2019, Texas Instruments Incorporated

The proper connections for the Tx signal path for DAC mode operation are shown in Figure 27. Operating in DAC mode results in the lowest distortion signal injected onto the ac mains. No additional external filtering components are required to meet CENELEC requirements for A, B, C or D bands when operating in DAC mode.

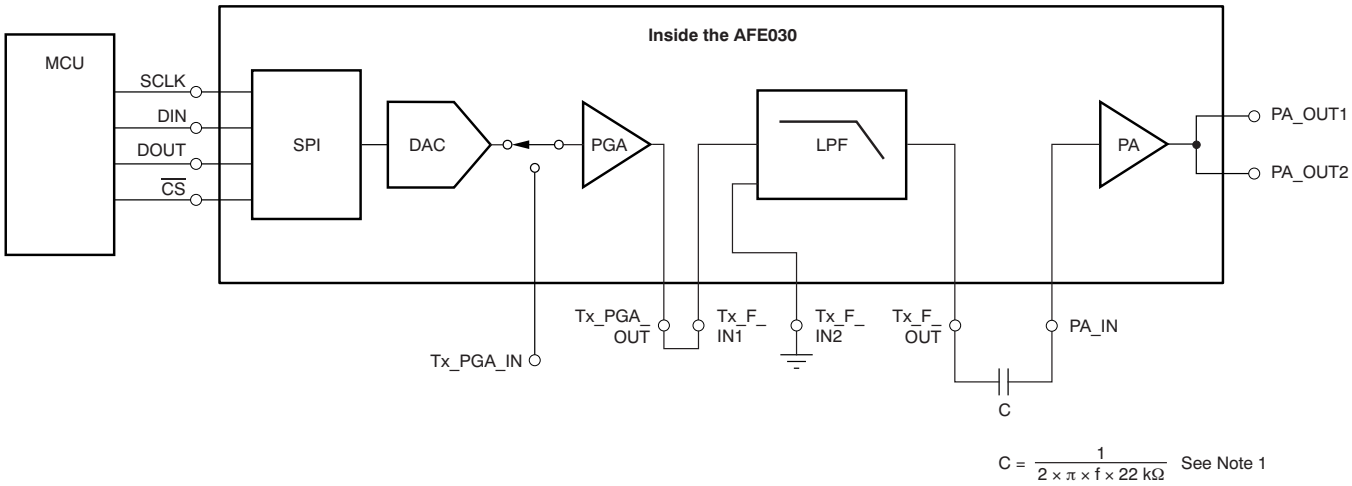

(1) For capacitor value *C*, *f* is the desired lower cutoff frequency and 22 kΩ is the PA input resistance.

Figure 27. Recommended Tx Signal Chain Connections Using DAC Mode

In PWM mode (where pin 7 is a logical '0' and Enable1 Register bit location 5 is a logical '0'), the microprocessor general-purpose input/output (GPIO) can be connected directly to either one of the Tx Filter inputs; the unused input should remain unconnected. A lower distortion PWM signal generated from two PWM signals shifted in phase by 90 degrees can be also be input to the Tx Filter through the use of both inputs. Figure 28 and Figure 29 show the proper connections for single PWM and dual PWM operating modes, respectively.

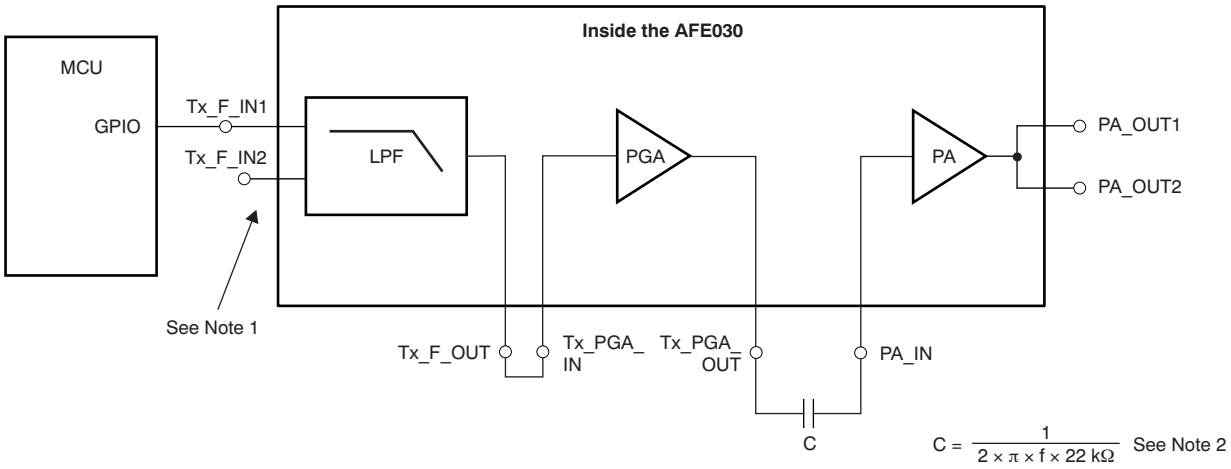

(1) Leave unused Tx Filter input unconnected.

(2) For capacitor value *C*, *f* is the desired lower cutoff frequency and 22 kΩ is the PA input resistance.

Figure 28. Recommended Tx Signal Chain Connections in PWM Mode Using One PWM Signal

Copyright © 2011–2019, Texas Instruments Incorporated

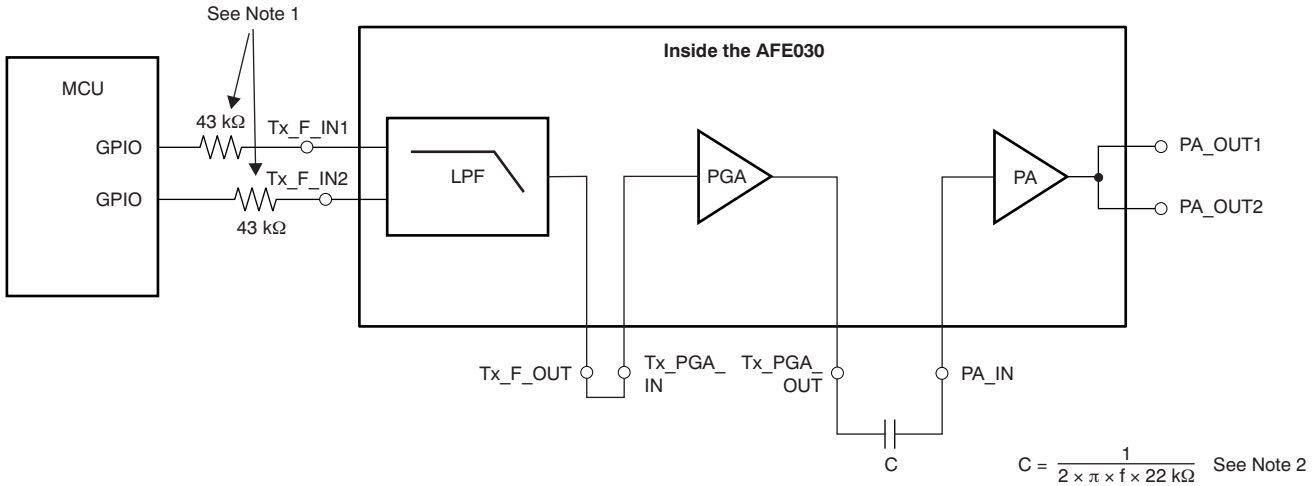

(1) When using both Tx Filter inputs, use 43-kΩ resistors to match the input resistance for best frequency response.

(2) For capacitor value *C*, *f* is the desired lower cutoff frequency and 22 kΩ is the PA input resistance.

Figure 29. Recommended Tx Signal Chain Connections in PWM Mode Using Two PWM Signals

In PWM mode, there is inherently more distortion from the PWM signal than from the internal DAC. To achieve the best results in PWM mode, add passive RC filters to increase the low-pass filtering. Figure 30 and Figure 31 illustrate the recommended locations of these RC filters.

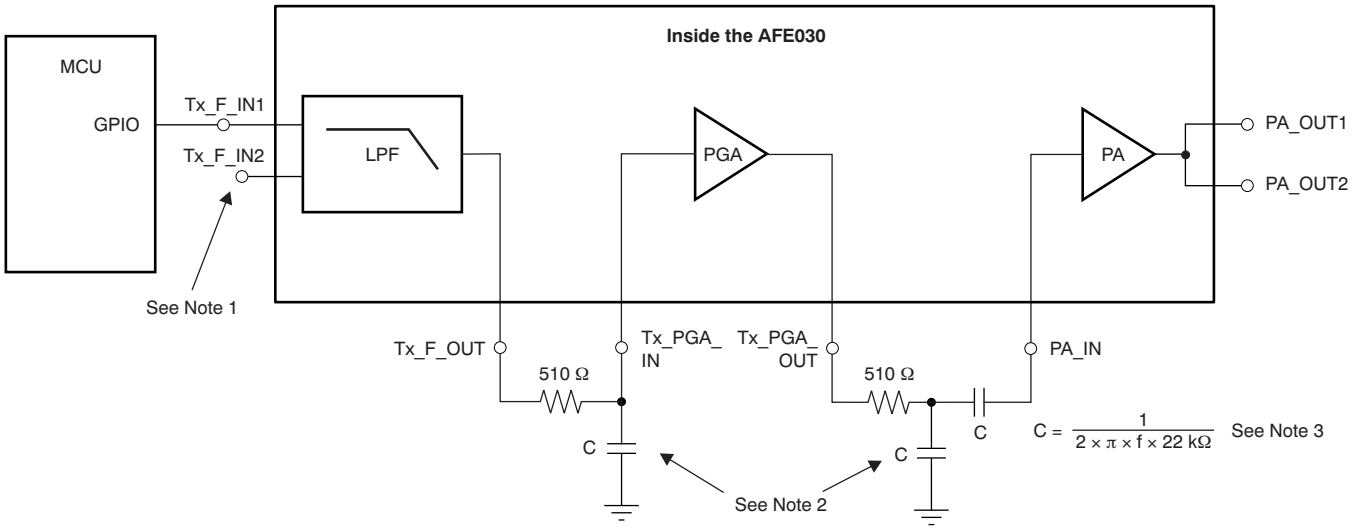

(1) Leave unused Tx Filter input unconnected.

(2) Refer to Table 3.

(3) For capacitor value *C*, *f* is the desired lower cutoff frequency and 22 kΩ is the PA input resistance.

Figure 30. Recommended Tx Signal Chain Connections in PWM Mode Using One PWM Signal and Additional RC Filters

Copyright © 2011–2019, Texas Instruments Incorporated

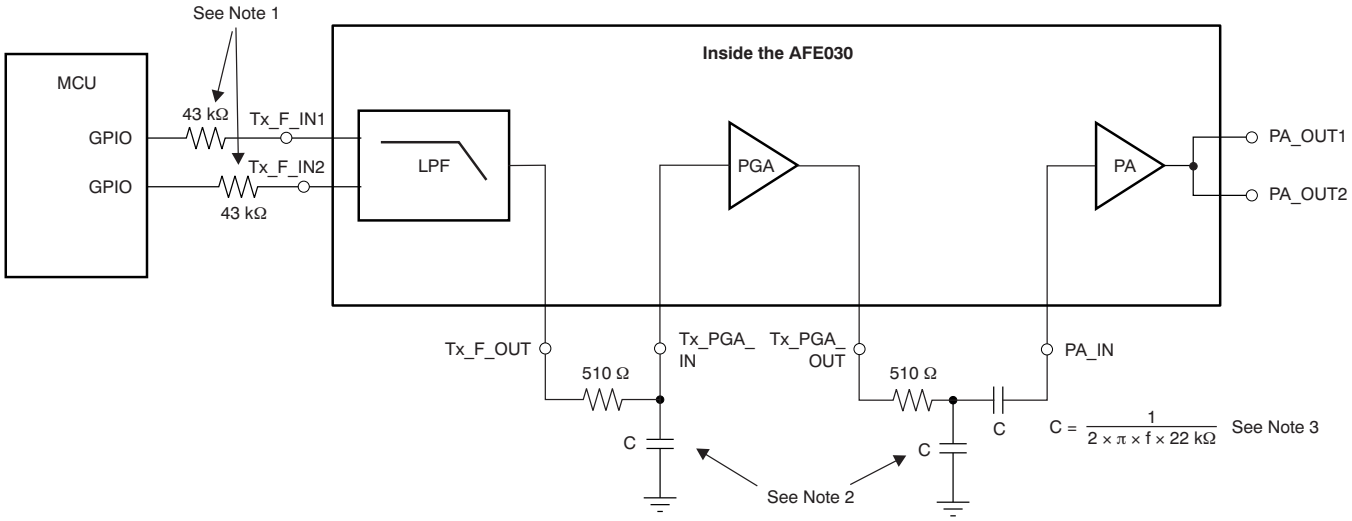

(1) When using both Tx Filter inputs, use 43-kΩ resistors to match the input resistance for best frequency response.

(2) Refer to Table 3.

(3) For capacitor value *C*, *f* is the desired lower cutoff frequency and 22 kΩ is the PA input resistance.

Figure 31. Recommended Tx Signal Chain Connections in PWM Mode Using Two PWM Signals and Additional RC Filters

For the capacitors listed in Table 3, it is recommended that these components be rated to withstand the full AV_{DD} power-supply voltage.

Table 3. Recommended External R and C Values to Increase Tx Filter Response Order in PWM Applications

FREQUENCY BAND	R (Ω)	C (nF)
SFSK: 63 kHz, 74 kHz	510	2.7
CENELEC A	510	1.5
CENELEC B, C, D	510	1

The Tx PGA and Tx Filter each have the inputs and outputs externally available in order to provide maximum system design flexibility. Care should be taken when laying out the PCB traces from the inputs or outputs to avoid excessive capacitive loading. Keeping the PCB capacitance from the inputs to ground, or from the outputs to ground, less than 100 pF is recommended.

9.3.3 Rx Block

The Rx block consists of Rx PGA1, the Rx Filter, and Rx PGA2. Both Rx PGA1 and Rx PGA2 are high-performance programmable gain amplifiers. Rx PGA1 can be configured through the SPI to operate as either an attenuator or in gain. The gain steps of the Rx PGA1 are 0.25 V/V, 0.5 V/V, 1 V/V, and 2 V/V. The gain steps of the Rx PGA2 are 1 V/V, 4 V/V, 16 V/V, and 64 V/V. Configuring the Rx PGA1 as an attenuator (at gains less than 1 V/V) is useful for applications where the presence of large interference signals are present within the signal band. Attenuating the large interference allows these signals to pass through the analog Rx signal chain without causing an overload; the interference signal can then be processed and removed within the microprocessor as necessary.

The Rx Filter is a very low noise, unity-gain, fourth-order low-pass filter. The Rx Filter cutoff frequency is selectable between CENELEC A or CENELEC B, C, and D modes. The Control1 Register bit location 3 setting (CA CBCD) determines the cutoff frequency. Setting Control1 Register bit location 3 to '0' selects the CENELEC A band; setting Control1 Register bit location 3 to '1' selects the CENELEC B, C, and D bands. Because the Rx Filter is a very low noise analog filter, two external capacitors are required to properly configure the Rx Filter. Table 4 shows the proper capacitance values for CENELEC A, B, C, and D bands. Capacitor Rx C1 is connected between pin 24 and ground, and Rx C2 is connected between pin 23 and ground. For the capacitors shown, it is recommended that these components be rated to withstand the full AV_{DD} power-supply voltage

Copyright © 2011–2019, Texas Instruments Incorporated

Table 4. Recommended External Capacitors Required for Rx Filter

FREQUENCY BAND	Rx C1, PIN 24	Rx C2, PIN 23	CUTOFF FREQUENCY (kHz)
CENELEC A	680 pF	680 pF	90
CENELEC B, C, D	270 pF	560 pF	145

Figure 32 illustrates the recommended connections for the Rx signal chain.

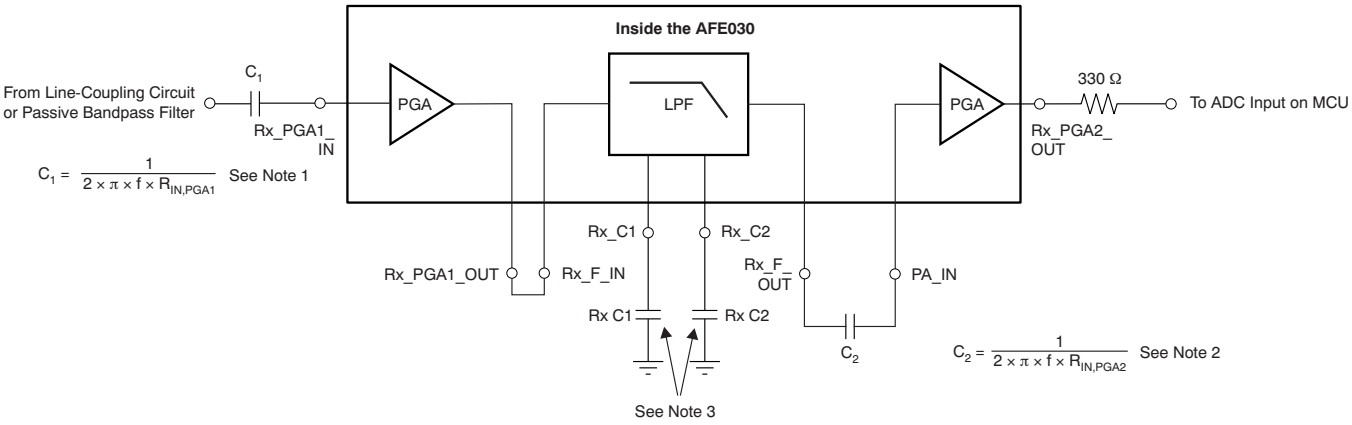

(1) For capacitor value C_1, f is the desired lower cutoff frequency and $R_{IN,PGA1}$ is the input resistance of Rx PGA1.

(2) For capacitor value C_2, f is the desired lower cutoff frequency and $R_{IN,PGA2}$ is the input resistance of Rx PGA2.

(3) Refer to Table 4.

Figure 32. Recommended Connections for Rx Signal Chain

As Figure 33 shows, a fourth-order passive passband filter is optional but recommended for applications where high performance is required. The external passive passband filter removes any unwanted, out-of-band signals from the signal path, and prevents them from reaching the active internal filters within the AFE030.

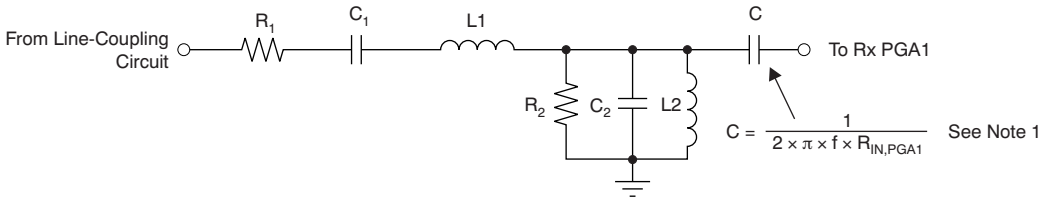

(1) For capacitor value C, f is the desired lower cutoff frequency and $R_{IN,PGA1}$ is the input resistance of Rx PGA1. Refer to Table 4.

Figure 33. Passive Bandpass Rx Filter

Copyright © 2011–2019, Texas Instruments Incorporated

The following steps can be used to quickly design the passive passband filter. (Note that these steps produce an approximate result.)

1. Choose the filter characteristic impedance, Z_C:
   - For –6-db passband attenuation: $R_1 = R_2 = Z_C$
   - For 0-db passband attenuation: $R_1 = Z_C$, $R_2 = 10 \times Z_C$
2. Calculate values for C_1, C_2, L_1, and L_2 using the following equations:

$$C_1 = \frac{1}{(2 \times \pi \times f_1 \times Z_C)}$$

$$C_2 = \frac{1}{(2 \times \pi \times f_2 \times Z_C)}$$

$$L_1 = \frac{Z_C}{(2 \times \pi \times f_2)}$$

$$L_2 = \frac{Z_C}{(2 \times \pi \times f_1)}$$

Table 5 and Table 6 shows standard values for common applications.

Table 5. Recommended Component Values for Fourth-Order Passive Bandpass Filter (0-db Passband Attenuation)

FREQUENCY BAND	FREQUENCY RANGE (kHz)	CHARACTERISTIC IMPEDANCE (Ω)	R1 (Ω)	R2 (Ω)	C1 (nF)	C2 (nF)	L1 (µH)	L2 (µH)
CENELEC A	35 to 95	1k	1k	10k	4.7	1.5	1500	4700
CENELEC B, C, D	95 to 150	1k	1k	10k	1.7	1	1200	1500
SFSK	63 to 74	1k	1k	10k	2.7	2.2	2200	2200

Table 6. Recommended Component Values for Fourth-Order Passive Bandpass Filter (–6-db Passband Attenuation)

FREQUENCY BAND	FREQUENCY RANGE (kHz)	CHARACTERISTIC IMPEDANCE (Ω)	R1 (Ω)	R2 (Ω)	C1 (nF)	C2 (nF)	L1 (µH)	L2 (µH)
CENELEC A	35 to 95	1k	1k	1k	4.7	1.5	1500	4700
CENELEC B, C, D	95 to 150	1k	1k	1k	1.7	1	1200	1500
SFSK	63 to 74	1k	1k	1k	2.7	2.2	2200	2200

Copyright © 2011–2019, Texas Instruments Incorporated

The Rx PGA1, Rx Filter, and Rx PGA2 components have all inputs and outputs externally available to provide maximum system design flexibility. Care should be taken when laying out the PCB traces from the inputs or outputs to avoid excessive capacitive loading. Keeping the PCB capacitance from the inputs to ground, or outputs to ground, below 100 pF is recommended.

Figure 34 shows the complete Rx signal path, including the optional passive passband filter.

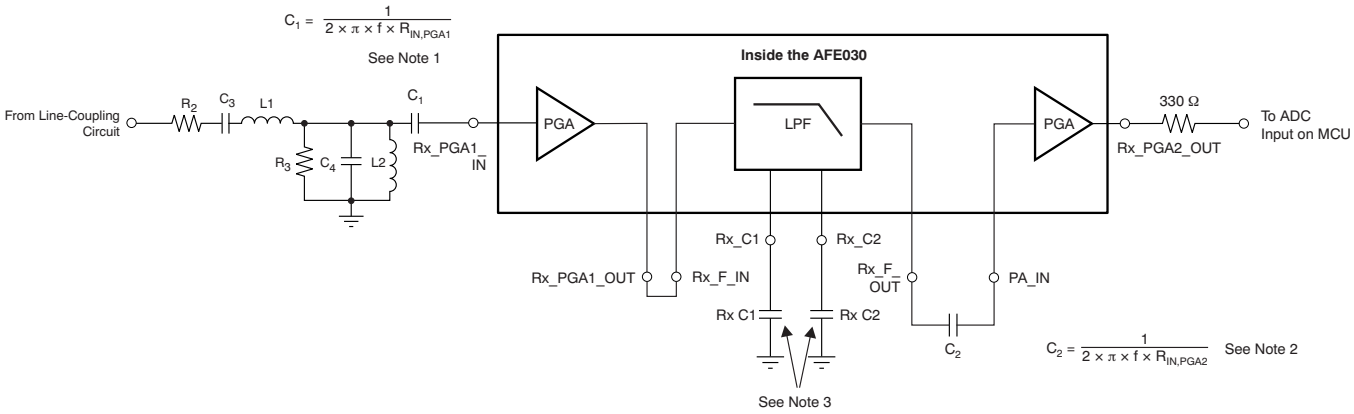

(1) For capacitor value *C1*,*f* is the desired lower cutoff frequency and $R_{IN,PGA1}$ is the input resistance of Rx PGA1.

(2) For capacitor value *C2*,*f* is the desired lower cutoff frequency and $R_{IN,PGA2}$ is the input resistance of Rx PGA2.

(3) Refer to Table 4.

Figure 34. Complete Rx Signal Path (with Optional Bandpass Filter)

9.3.4 DAC Block

The DAC block consists only of the 10-bit DAC. The use of the DAC is recommended for best performance. The serial interface is used to write directly to the DAC registers when the DAC pin (pin 7) is driven high. Placing the DAC pin into a high state configures the SPI for direct serial interface to the DAC. Use the following sequence to write to the DAC:

- Set $\overline{CS}$ low.
- Set the DAC pin (pin 7) high.
- Write a 10-bit word to DIN. The DAC register is left-justified and truncates more than 10 bits.
- $\overline{CS}$ high updates the DAC.

Copyright © 2011–2019, Texas Instruments Incorporated

Refer to Figure 35 for an illustration of this sequence.

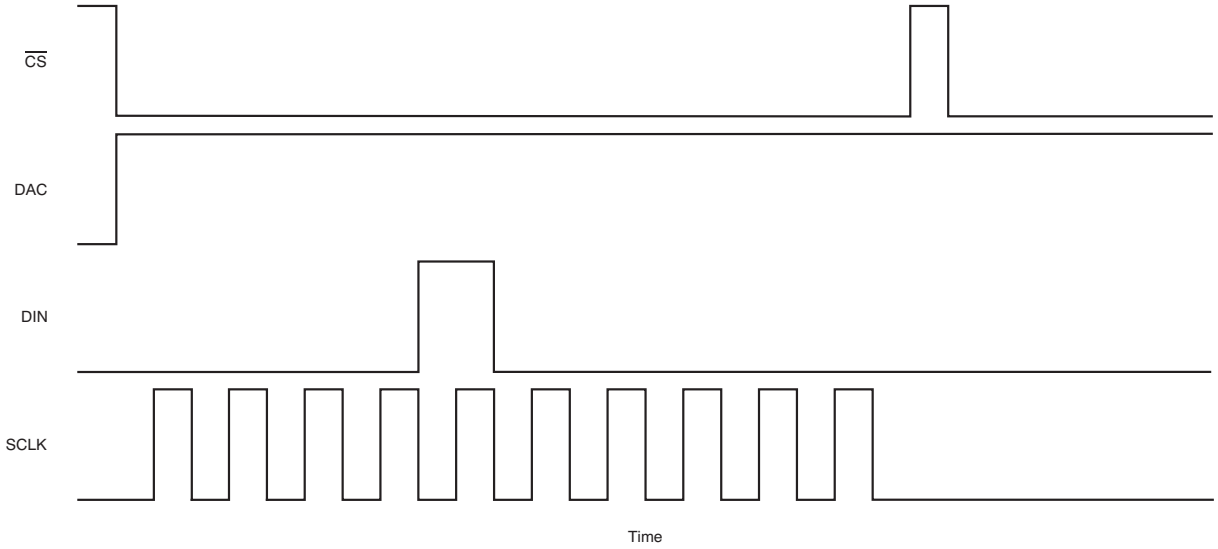

Figure 35. Writing to the DAC Register

Table 7 lists the DAC Register configurations.

Table 7. DAC Registers

DAC PIN HIGH: DAC REGISTER <15:0> BIT NAME	LOCATION (0 = LSB)	DEFAULT	R/W	FUNCTION
DAC<0>	0	—	W	Truncated
DAC<1>	1	—	W	Truncated
DAC<2>	2	—	W	Truncated
DAC<3>	3	—	W	Truncated
DAC<4>	4	—	W	Truncated
DAC<5>	5	—	W	Truncated
DAC<6>	6	—	W	DAC bit 0 = DAC LSB
DAC<7>	7	—	W	DAC bit 1
DAC<8>	8	—	W	DAC bit 2
DAC<9>	9	—	W	DAC bit 3
DAC<10>	10	—	W	DAC bit 4
DAC<11>	11	—	W	DAC bit 5
DAC<12>	12	—	W	DAC bit 6
DAC<13>	13	—	W	DAC bit 7
DAC<14>	14	—	W	DAC bit 8
DAC<15>	15	—	W	DAC bit 9 = DAC MSB

Copyright © 2011–2019, Texas Instruments Incorporated

9.3.5 REF1 and REF2 Blocks

The REF1 and REF2 blocks create midscale power-supply biasing points used internally to the AFE030. Each reference divides its respective power-supply voltage in half with a precision resistive voltage divider. REF1 provides a $PA_V_S/2$ voltage at the output of the PA, while REF2 provides an $AV_{DD}/2$ voltage at the outputs of the Tx PGA, Tx Filter, Rx PGA1, Rx Filter, and Rx PGA2. Each REF block has its output brought out to an external pin that can be used for filtering and noise reduction. Figure 36 and Figure 37 show the proper connections of the external noise-reducing capacitors. These capacitors are optional, but are recommended for best performance.

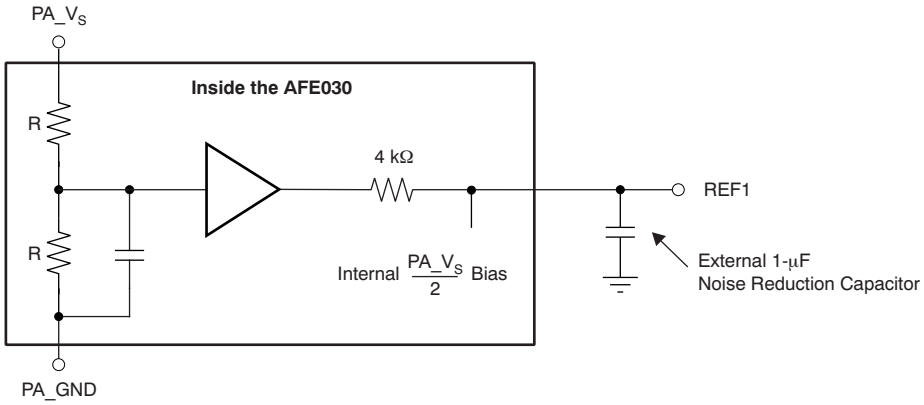

Figure 36. REF1 Functional Diagram

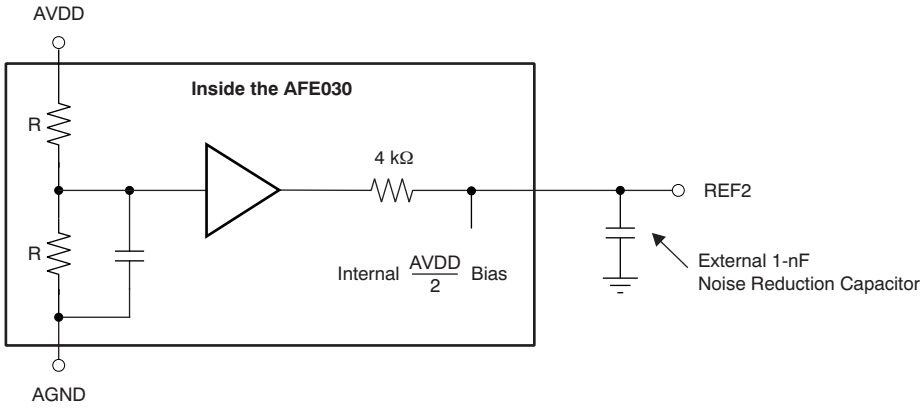

Figure 37. REF2 Functional Diagram

Copyright © 2011–2019, Texas Instruments Incorporated

9.3.6 Zero Crossing Detector Block

The AFE030 includes two zero crossing detectors. Zero crossing detectors can be used to synchronize communications signals to the ac line or sources of noise. Typically, in single-phase applications, only a single zero crossing detector is used. In three-phase applications, both zero crossing detectors can be used; one component detects phase A, and one detects phase B. Phase C zero crossings can then be inferred from the data gathered from the other phases. Figure 38 shows the AFE030 configured for non-isolated zero crossing detection.

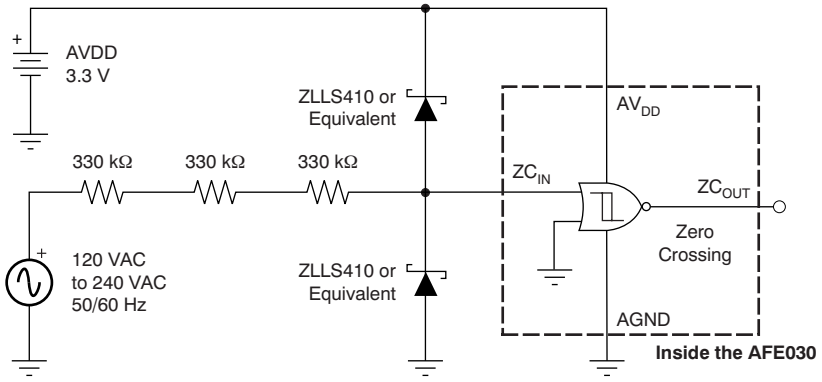

Figure 38. Non-Isolated Zero Crossing Detection Using the AFE030

Non-isolated zero crossing waveforms are shown in Figure 39.

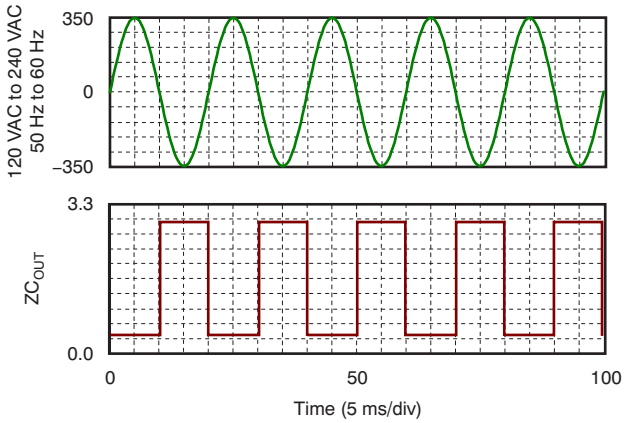

Figure 39. Non-Isolated Zero Crossing Waveforms

Copyright © 2011–2019, Texas Instruments Incorporated

For maximum protection of the AFE030 against line transients, it is recommended to use Schottky diodes as indicated in Figure 38. These diodes should limit the ZC_IN pins (pins 38 and 39) to within the maximum rating of (AV_{DD} + 0.4 V) and (AGND – 0.4 V). Some applications may require an isolated zero crossing detection circuit. With a minimal amount of components, the AFE030 can be configured for isolated zero crossing detection, as Figure 40 shows.

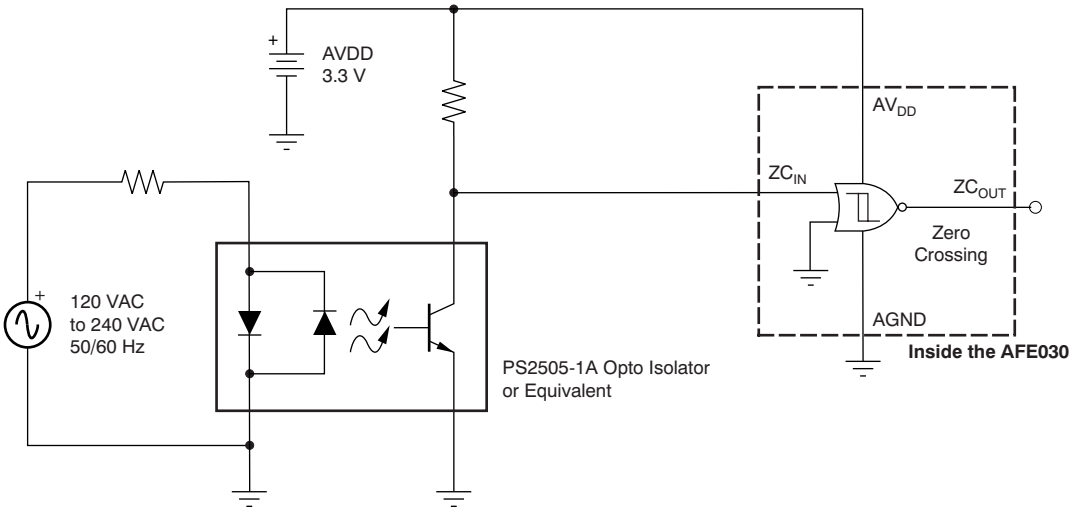

Figure 40. Isolated Zero Crossing Detection Using the AFE030

Isolated zero crossing waveforms are shown in Figure 41.

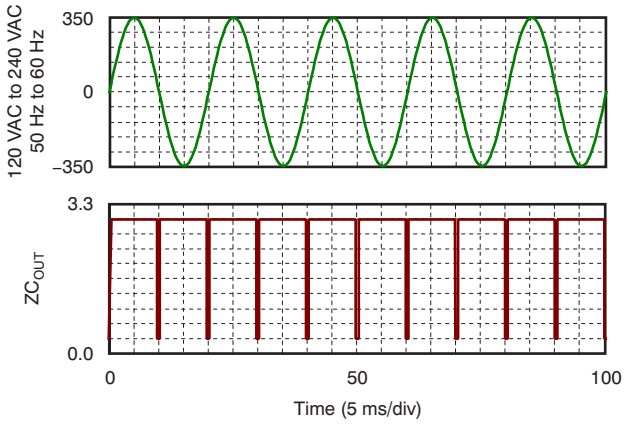

Figure 41. Isolated Zero Crossing Waveforms

Copyright © 2011–2019, Texas Instruments Incorporated

9.3.7 ETx and ERx Blocks

The AFE030 contains a two-wire transmitter block, ETx, and a two-wire receiver block, ERx. These blocks support communications that use amplitude shift keying (ASK) with on-off keying (OOK) modulation.

The ETx block is a gated driver that allows for transmission of a carrier input signal and modulating input signal. For typical applications, a 50-kHz square wave carrier signal is applied to E_Tx_Clk while the modulating signal is applied to E_Tx_In. The output (E_Tx_Out) is then in a high-impedance state when E_Tx_In is '1'. Figure 42 shows the relationship between E_Tx_Clk, E_Tx_In, and E_Tx_Out.

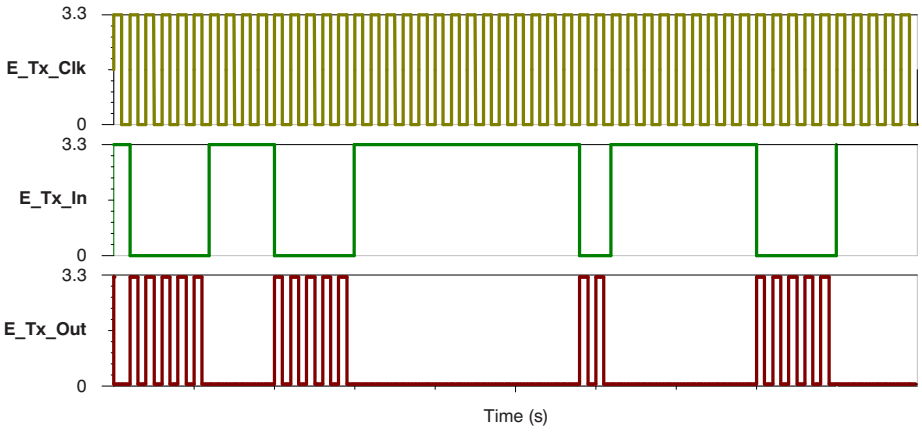

Figure 42. ETx Block Transfer Function

The ERx Block consists of a low-pass analog filter configured in an inverting gain of –4.5 db. This block, along with an external capacitor, can be used to create a passband filter response as shown in Figure 43.

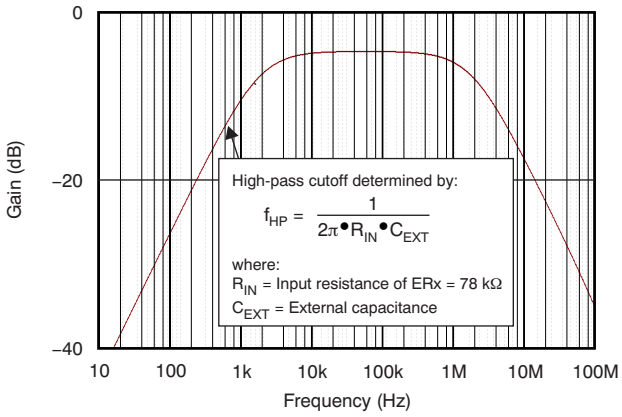

Figure 43. ERx Block Frequency Response

Copyright © 2011–2019, Texas Instruments Incorporated

The E_Rx_Out pin can be directly connected to either an available analog-to-digital converter (ADC) input or GPIO on the host microcontroller. Figure 44 illustrates a typical two-wire application for ETx and ERx.

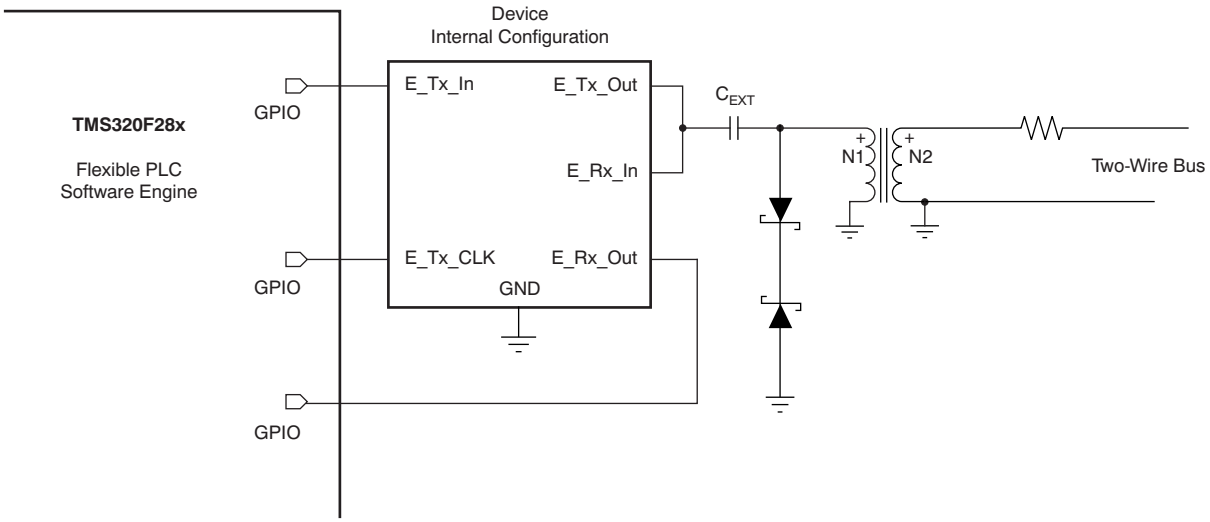

Figure 44. Typical Two-Wire Application for ETx and ERx

9.4 Power Supplies

The AFE030 has two low-voltage analog power-supply pins and one low-voltage digital supply pin. Internally, the two analog supply pins are connected to each other through back-to-back electrostatic discharge (ESD) protection diodes. These pins must be connected to each other on the application printed circuit board (PCB). It is also recommended to connect the digital supply pin and the two analog supply pins together on the PCB. Both low-voltage analog ground pins are also connected internally through back-to-back ESD protection diodes. These ground pins should also be connected to the digital ground pin on the PCB. It is recommended to bypass the low-voltage power supplies with a parallel combination of a 10-μf and 100-nf capacitor. The PA block is biased separately from a high-voltage, high-current supply.

Two PA power supply pins and two PA ground pins are available to provide a path for the high currents associated with driving the low impedance of the ac mains. Connecting the two PA supply pins together as close as possible to the AFE030 is recommended. It is also recommended to place a bypass capacitor of 47 μF to 100 μF in parallel with 100 nF as close as possible to the AFE030. Care must be taken when routing the high current ground lines on the PCB to avoid creating voltage drops in the PCB ground that may vary with changes in load current.

The AFE030 has many options to enable or disable the functional blocks to allow for flexible power-savings modes. Table 8 shows the specific power supply that each functional block draws power from, as well as the typical amount of power drawn from the associated power supplies for both the enabled and disabled states. For additional information on power-supply requirements refer to Application Report *Analog Front-End Design for a Narrowband Power-Line Communications Modem Using the AFE031*, literature number SBOA130 (available for download at www.ti.com).

Table 8. Power Consumption with Enable and Disable Times (Typical)

BLOCK	STATUS	ENABLE TIME	DISABLE TIME	AVDD SUPPLY CURRENT	DVDD SUPPLY CURRENT	PA SUPPLY CURRENT
PA	On	10 μs	—	—	—	40 mA
	Off	—	10 μs	—	—	70 μA
Tx	On	10 μs	—	3.7 mA	—	—
	Off	—	10 μs	1 μA	—	—
Rx	On	10 μs	—	5.3 mA	—	—
	Off	—	10 μs	1 μA	—	—
ERx	On	10 μs	—	900 μA	—	—
	Off	—	10 μs	1 μA	—	—
ETx	On	10 μs	—	1.2 mA	—	—
	Off	—	10 μs	1 μA	—	—
DAC	On	10 μs	—	—	16 μA	—
	Off	—	10 μs	—	1 μA	—
ZC	On	10 μs	—	25 μA	—	—
	Off	—	10 μs	1 μA	—	—
REF1	On	10 μs	—	—	—	26 μA
	Off	—	10 μs	—	—	8 μA
REF2	On	10 μs	—	25 μA	—	—
	Off	—	10 μs	4 μA	—	—

Copyright © 2011–2019, Texas Instruments Incorporated

9.5 Pin Descriptions

DAC (Pin 7)

The DAC pin is used to configure the SPI to either read or write data to the Command and Data Registers, or to write data to the DAC registers. Setting the DAC pin high allows access to the DAC registers. Setting the DAC pin low allows access to the Command and Data Registers.

SD (Pin 8)

The Shutdown pin (SD) can be used to shut down the entire AFE030 for maximum power savings. When the SD pin is low, normal operation of the AFE030 occurs. When the SD pin is high, all circuit blocks within the AFE030, including the serial interface, are placed into the lowest-power operating modes. In this condition, the entire AFE030 draws only 95 μA of current. All register contents at the time the AFE030 is placed into shutdown mode are saved; upon re-enabling the AFE030, the register contents retain the respective saved values.

INT (Pin 9)

The Interrupt pin (INT) can be used to signal the microprocessor of an unusual operating condition that results from an anomaly on the ac mains. The INTpin can be triggered by two external circuit conditions, depending upon the Enable Register settings. The AFE030 can be programmed to issue an interrupt on these conditions:

- Current overload
- Thermal overload

9.5.1 Current Overload

The maximum output current allowed from the Power Amplifier can be programmed with the external R_{SET} resistor connected between PA_ISET (pin 46) and ground. If a fault condition should occur and cause an overcurrent event for the PA, the PA goes into current limit and the I_FLAG bit (location 6 in the RESET Register) is set to a '1' if the I_Flag_EN bit (location 6 in the Control2 Register) is enabled. This configuration results in an interrupt signal at the INT pin. The I_FLAG bit remains set to '1' even after the device returns to normal operation. The I_FLAG bit remains at '1' until it is reset by the microprocessor.

If the I_FLAG_EN bit (location 6 in the Control2 Register) is disabled and a current overload condition occurs, the PA goes into current-limit mode to protect the AFE030; however, the contents of the I_FLAG bit (location 6 in the RESET Register) remain at the respective previous values (presumably '0' for normal operation), and the AFE030 does not issue an interrupt at the INT pin.

9.5.2 Thermal Overload

The AFE030 contains internal protection circuitry that automatically disables the PA output stage if the junction temperature exceeds +165°C. If a fault condition occurs that causes a thermal overload, and if the T_FLAG_EN bit (location 5 in the Control2 Register) is enabled, the T_FLAG bit (location 5 in the RESET Register) is set to a '1'. This configuration results in an interrupt signal at the INT pin. The AFE030 includes a thermal hysteresis and allows the PA to resume normal operation when the junction temperature reduces to 145°C. The T_FLAG bit remains set to a '1' even after the device returns to normal operation. The T_FLAG bit remains '1' until it is reset by the microprocessor.

If the T_FLAG_EN bit (location 5 in the Control2 Register) is disabled and a thermal overload condition occurs, the PA continues to go into thermal limit and protect the AFE030, but the contents of the T_FLAG bit (location 5 in the RESET Register) remain at the previous value (presumably '0' for normal operation), and the AFE030 does not issue an interrupt at the INT pin.

Once an interrupt is signaled (that is, INT goes low), the contents of the I_FLAG and T_FLAG bits can be read by the microprocessor to determine the type of interrupt that occurred. Using the Control2 Register, each interrupt type (current or thermal) can be individually enabled or disabled, allowing full user customization of the INT function. For proper operation of the interrupt pin it is recommended to configure the interrupt enable registers in the Control2 Register by writing to bit locations 5, 6, and 7 following the information in Table 9 after each time the AFE030 is powered on. Failure to properly configure bit locations 5, 6, and 7 after power on may result in unexpected interrupt signals.

Copyright © 2011–2019, Texas Instruments Incorporated

Pin Descriptions (continued)

Table 9 lists the register contents associated with each interrupt condition.

Table 9. Register Contents to Configure the Interrupt Pin

FUNCTION	CONTROL2 REGISTER CONTENTS: DETERMINE INTERRUPT PIN FUNCTIONALITY		
	D7	I_FLAG_EN (CURRENT OVERLOAD) D6	T_FLAG_EN (THERMAL OVERLOAD) D5
POR (default values)	undefined	0	0
No interrupt	0	0	0
Interrupt on thermal overload only	0	0	1
Interrupt on current overload only	0	1	0
Interrupt on thermal or current overload	0	1	1

TSENSE Pin (10)

The TSENSE pin is internally connected to the anode of a temperature-sensing diode located within the PA output stage. Figure 45 shows a remote junction temperature sensor circuit that can be used to measure the junction temperature of the AFE030. Measuring the junction temperature of the AFE030 is optional and not required.

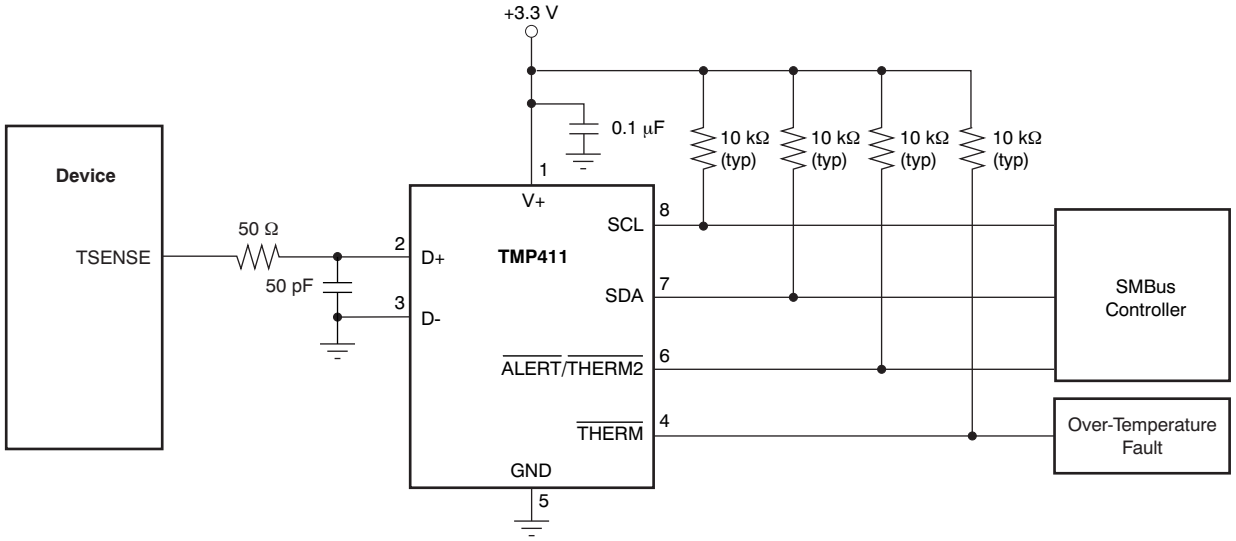

Figure 45. Interfacing the TMP411 to the AFE030

Tx_FLAG (Pin 47)

The Tx_FLAG pin is an open drain output that indicates the readiness of the Tx signal path for transmission. When the Tx_FLAG pin is high, the transmit signal path is enabled and ready for transmission. When the Tx_FLAG pin is low, the transmit path is not ready for transmission.

Rx_FLAG (Pin 48)

The Rx_FLAG pin is an open drain output that indicates the readiness of the Rx signal path for transmission. When the Rx_FLAG pin is high, the transmit signal path is enabled and ready for transmission. When the Rx_FLAG pin is low, the transmit path is not ready for transmission.

Copyright © 2011–2019, Texas Instruments Incorporated

9.6 Calibration Modes

The AFE030 can be configured for two different calibration modes: Tx Calibration and Rx Calibration. Calibration values can be determined during the calibration process and stored in system memory. A one-time calibration can be performed the first time that the system powers on; this calibration remains valid over the full temperature range and operating life of the AFE030, independent of the number of power-on/power-off cycles, as long as the calibration factors remain in the system memory. Calibration mode is accessed through the Control1 Register. Note that calibration is not required.

9.6.1 Tx Calibration Mode

The Tx PGA + Tx Filter ac gain can be calibrated in Tx Calibration Mode. Figure 46 shows the signal path during Tx Calibration mode.

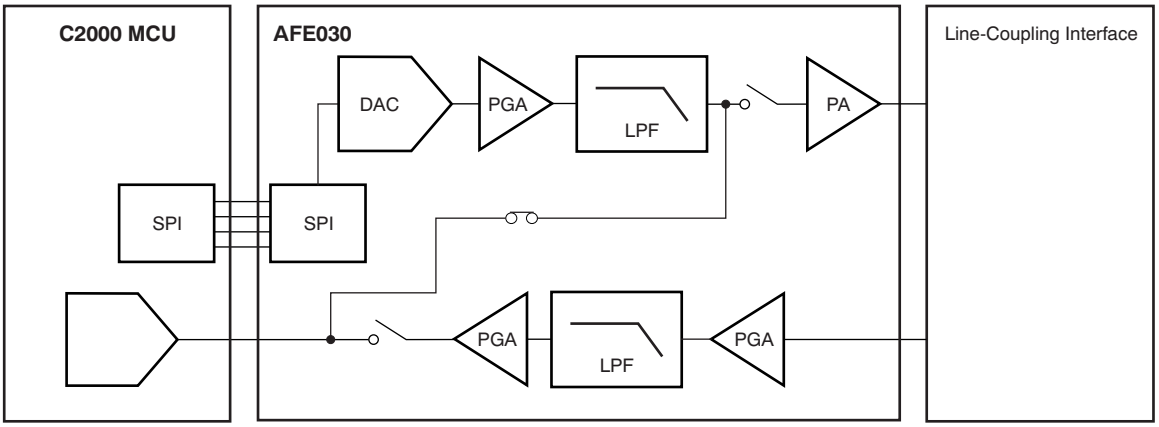

Figure 46. Tx Calibration Mode Configuration

9.6.2 Rx Calibration Mode

The Tx PGA + Rx PGA1 + Rx Filter + Rx PGA2 ac gain can be calibrated in Rx Calibration mode. Figure 47 shows the signal path during Rx Calibration mode.

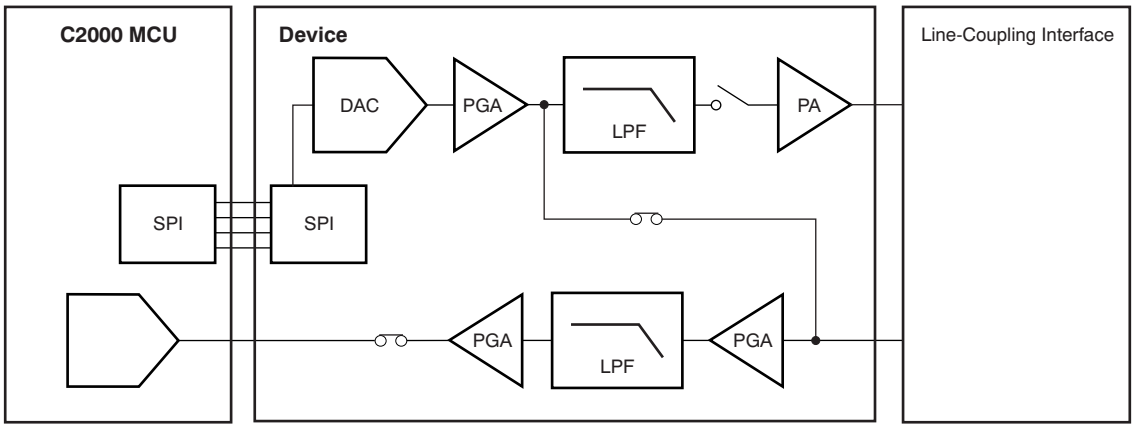

Figure 47. Rx Calibration Mode Configuration

Copyright © 2011–2019, Texas Instruments Incorporated

9.7 Serial Interface

The AFE030 is controlled through a serial interface that allows read/write access to the control and data registers. A host SPI frame consists of a R/W bit, a 6-bit register address, and eight data bits. Data are shifted out on the falling edge of SCLK and latched on the rising edge of SCLK. Refer to the Timing Diagrams for a valid host SPI communications protocol. Table 10 through Table 19 show the complete register information.

Table 10. Data Register

REGISTER	ADDRESS	DEFAULT	FUNCTION
ENABLE1	01h	00h	Block enable or disable
GAIN SELECT	02h	32h	Rx and Tx gain select
ENABLE2	03h	00h	Block enable or disable
CONTROL1	04h	00h	Frequency select and calibration, Tx and Rx status
CONTROL2	05h	01h	Interrupt enable
RESET	09h	00h	Interrupt status and device reset
DIE_ID	0Ah	01h	Die name
REVISION	0Bh	02h	Die revision

Table 11. Command Register

BIT NAME	LOCATION (15 = MSB)	R/W	FUNCTION
ADDR8	8	W	Register address bit
ADDR9	9	W	Register address bit
ADDR10	10	W	Register address bit
ADDR11	11	W	Register address bit
ADDR12	12	W	Register address bit
ADDR13	13	W	Register address bit
ADDR14	14	W	Register address bit
R/W	15	W	Read/write: read = 1, write = 0

Table 12. Enable1 Register: Address 00h
Default: 00h

Enable1 Register <7:0>				
BIT NAME	LOCATION (0 = LSB)	DEFAULT	R/W	FUNCTION
PA	0	0	R/W	This bit is used to enable/disable the PA block. 0 = Disabled 1 = Enabled
TX	1	0	R/W	This bit is used to enable/disable the Tx block. 0 = Disabled 1 = Enabled
RX	2	0	R/W	This bit is used to enable/disable the Rx block. 0 = Disabled 1 = Enabled
ERX	3	0	R/W	This bit is used to enable/disable the ERx block. 0 = Disabled 1 = Enabled
ETX	4	0	R/W	This bit is used to enable/disable the ETx block. 0 = Disabled 1 = Enabled
DAC	5	0	R/W	This bit is used to enable/disable the DAC block. 0 = DAC disabled; switch is connected to Tx_PGA_IN pin. 1 = DAC enabled; switch is connected to DAC output.
—	6	0	—	Reserved
—	7	0	—	Reserved

Copyright © 2011–2019, Texas Instruments Incorporated

Table 13. Gain Select Register: Address 02h
Default: 32h

Gain Select Register <7:0>				
BIT NAME	**LOCATION (0 = LSB)**	**DEFAULT**	**R/W**	**FUNCTION**
RX1G-0, RX1G-1	0, 1	0, 1	R/W	This bit is used to set the gain of the Rx PGA1. 00 = 0.25 V/V 01 = 0.5 V/V 10 = 1 V/V 11 = 2 V/V
RX2G-0, RX2G-1	2, 3	0, 0	R/W	This bit is used to set the gain of the Rx PGA2. 00 = 1 V/V 01 = 4 V/V 10 = 16 V/V 11 = 64 V/V
TXG-0, TXG-1	4, 5	1, 1	R/W	This bit is used to set the gain of the Tx PGA. 00 = 0.25 V/V 01 = 0.5 V/V 10 = 0.707 V/V 11 = 1 V/V
—	6	0	—	Reserved
—	7	0	—	Reserved

Table 14. Enable2 Register: Address 03h
Default: 00h

Enable2 Register <7:0>				
BIT NAME	**LOCATION (0 = LSB)**	**DEFAULT**	**R/W**	**FUNCTION**
ZC	0	0	R/W	This bit is used to enable/disable the ZC block. 0 = Disabled 1 = Enabled
REF1	1	0	R/W	This bit is used to enable/disable the REF1 block. 0 = Disabled 1 = Enabled
REF2	2	0	R/W	This bit is used to enable/disable the REF2 block. 0 = Disabled 1 = Enabled
PA_OUT	3	0	R/W	This bit is used to enable/disable the PA output stage. When the PA output stage is enabled it functions normally with a low output impedance, capable of driving heavy loads. When the PA output stage is disabled it is placed into a high impedance state. 0 = Disabled 1 = Enabled
—	4	0	—	Reserved
—	5	0	—	Reserved
—	6	0	—	Reserved
—	7	0	—	Reserved

Copyright © 2011–2019, Texas Instruments Incorporated

Table 15. Control1 Register: Address 04h
Default: 00h

Control1 Register <7:0>				
BIT NAME	**LOCATION (0 = LSB)**	**DEFAULT**	**R/W**	**FUNCTION**
TX_CAL	0	0	R/W	This bit is used to enable/disable the TX calibration mode. 0 = Disabled 1 = Enabled
RX_CAL	1	0	R/W	This bit is used to enable/disable the RX calibration mode. 0 = Disabled 1 = Enabled
—	2	0	—	Reserved
CA_CBCD	3	0	R/W	This bit is used to select the frequency response of the Tx filter and Rx filter. 0 = CENELEC A 1 = CENELEC B, C, D
—	4	0	—	Reserved
—	5	0	—	Reserved
TX_FLAG	6	0	R	This bit is used to indicate the status of the Tx block. 0 = Tx block is not ready for transmission 1 = Tx block is ready for transmission
RX_FLAG	7	0	R	This bit is used to indicate the status of the Rx block. 0 = Rx block is not ready for reception 1 = Rx block is ready for reception

Table 16. Control2 Register: Address 05h
Default: 01h

Control2 Register <7:0>				
BIT NAME	**LOCATION (0 = LSB)**	**DEFAULT**	**R/W**	**FUNCTION**
—	0	0	—	Reserved
—	1	0	—	Reserved
—	2	0	—	Reserved
—	3	0	—	Reserved
—	4	0	—	Reserved
T_FLAG_EN	5	0	R/W	This bit is used to enable/disable the T_flag bit in the RESET Register. 0 = Disabled 1 = Enabled
I_FLAG_EN	6	0	R/W	This bit is used to enable/disable the I_flag bit in the RESET Register. 0 = Disabled 1 = Enabled
—	7	X	—	Reserved

Copyright © 2011–2019, Texas Instruments Incorporated

Table 17. RESET Register: Address 09h
Default: 00h

Reset Register <7:0>				
BIT NAME	**LOCATION (0 = LSB)**	**DEFAULT**	**R/W**	**FUNCTION**
--	0	0	--	Reserved
--	1	0	--	Reserved
SOFTRST0, SOFTRST1, SOFTRST2	2, 3, 4	0, 0, 0	W	These bits are used to perform a software reset of the ENABLE1, ENABLE2, CONTROL2, CONTROL3, and GAIN SELECT registers. Writing '101' to these registers performs a software reset.
T_FLAG	5	0	R/W	This bit is used to indicate the status of a PA thermal overload. 0 = On read, indicates that no thermal overload has occurred since the last reset. 0 = On write, resets this bit. 1 = On read, indicates that a thermal overload has occurred since the last reset. Remains latched until reset.
I_FLAG	6	0	R/W	This bit is used to indicate the status of a PA output current overload. 0 = On read indicates that no current overload has occurred since the last reset. 0 = On write, resets this bit. 1 = On read indicates that a current overload has occurred since the last reset. Remains latched until reset.
—	7	0	—	Reserved

Table 18. DieID Register: Address 0Ah
Default: 01h

DieID Register <7:0>				
BIT NAME	**LOCATION (0 = LSB)**	**DEFAULT**	**R/W**	**FUNCTION**
DIE ID<0>	0	1	R	The DieID Register is hard-wired.
DIE ID<1>	1	0	R	The DieID Register is hard-wired.
DIE ID<2>	2	0	R	The DieID Register is hard-wired.
DIE ID<3>	3	0	R	The DieID Register is hard-wired.
DIE ID<4>	4	0	R	The DieID Register is hard-wired.
DIE ID<5>	5	0	R	The DieID Register is hard-wired.
DIE ID<6>	6	0	R	The DieID Register is hard-wired.
DIE ID<7>	7	0	R	The DieID Register is hard-wired.

Table 19. Revision Register: Address 0Bh
Default: 02h

Revision Register <7:0>				
BIT NAME	**LOCATION (0 = LSB)**	**DEFAULT**	**R/W**	**FUNCTION**
REVISION ID<0>	0	0	R	The Revision Register is hard-wired.
REVISION ID<1>	1	1	R	The Revision Register is hard-wired.
REVISION ID<2>	2	0	R	The Revision Register is hard-wired.
REVISION ID<3>	3	0	R	The Revision Register is hard-wired.
REVISION ID<4>	4	0	R	The Revision Register is hard-wired.
REVISION ID<5>	5	0	R	The Revision Register is hard-wired.
REVISION ID<6>	6	0	R	The Revision Register is hard-wired.
REVISION ID<7>	7	0	R	The Revision Register is hard-wired.

Copyright © 2011–2019, Texas Instruments Incorporated

10 Application and Implementation

NOTE

Information in the following applications sections is not part of the TI component specification, and TI does not warrant its accuracy or completeness. TI's customers are responsible for determining suitability of components for their purposes. Customers should validate and test their design implementation to confirm system functionality.

10.1 Application Information

The AFE030 is an integrated powerline communication analog front-end (AFE) device built from a variety of functional blocks that work in conjunction with a microcontroller. The AFE030 provides the interface between the microcontroller and a line coupling circuit. The AFE030 delivers high performance and is designed to work with a minimum number of external components. Consisting of a variety of functional and configurable blocks, the AFE030 simplifies design efforts and reduces the time to market of many applications.

10.2 Typical Application

Figure 48 shows the AFE030 configured in a typical PLC analog front-end application. The schematic shows the connections to the microprocessor and ac line. The values of the passive components in Figure 48 are suitable for a single-phase powerline communications application in the CENELEC A band, connected to a 120-VAC or 240-VAC, 50-Hz or 60-Hz ac line.

Copyright © 2011–2019, Texas Instruments Incorporated

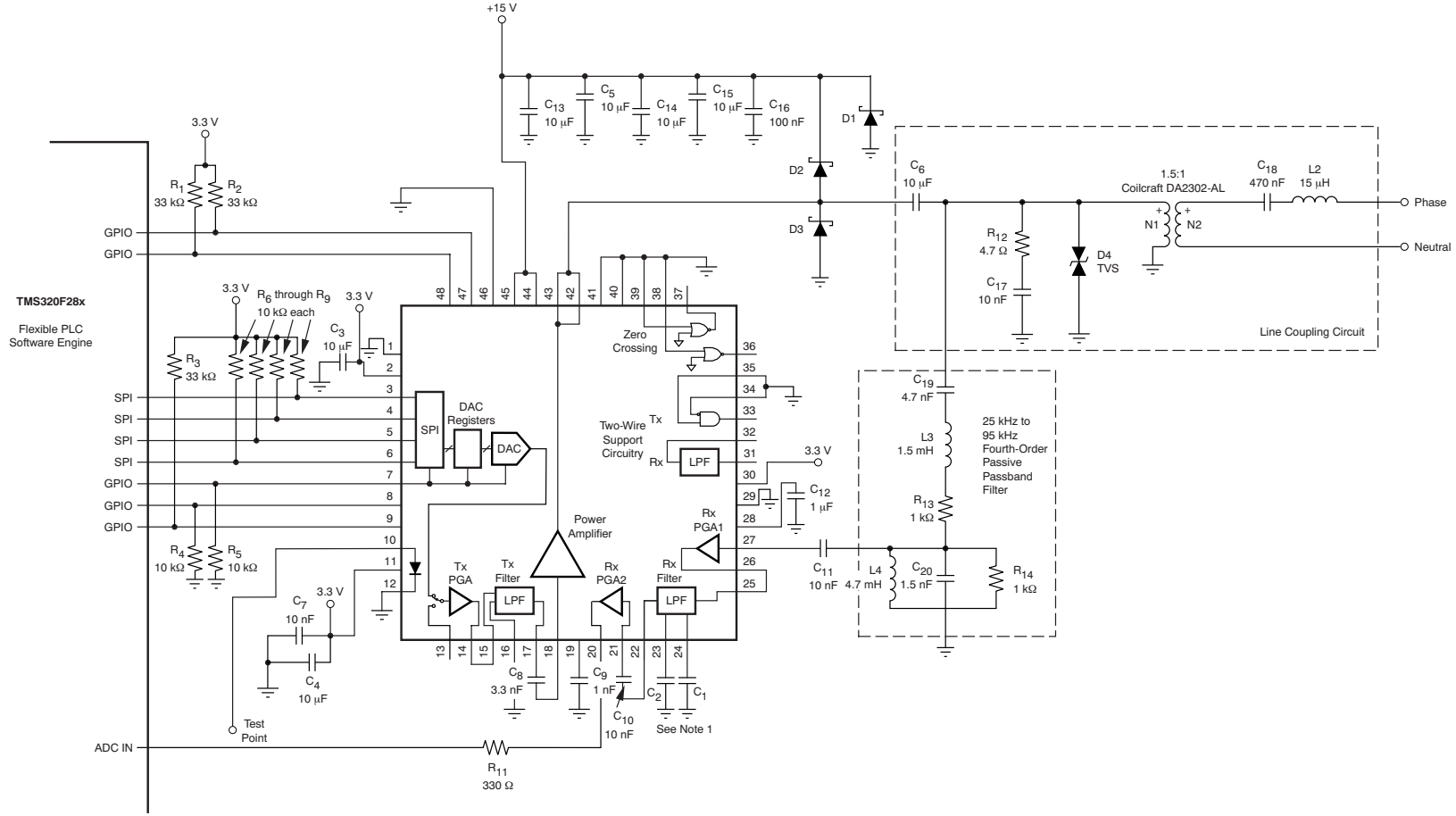

(1) Recommended values for C1 and C2:

1. C1:
   - CENELEC A: 680 pF
   - CENELEC B, C, D: 270 pF
2. C2:
   - CENELEC A: 680 pF
   - CENELEC B, C, D: 560 pF

Figure 48. Typical Powerline Communications Modem Application

Copyright © 2011–2019, Texas Instruments Incorporated

10.3 Line-Coupling Circuit

The line-coupling circuit is one of the most critical circuits in a powerline modem. The line-coupling circuit has two primary functions: first, to block the low-frequency signal of the mains (commonly 50 Hz or 60 Hz) from damaging the low-voltage modem circuitry; second, to couple the modem signal to and from the ac mains. A typical line-coupling circuit is shown in Figure 49.

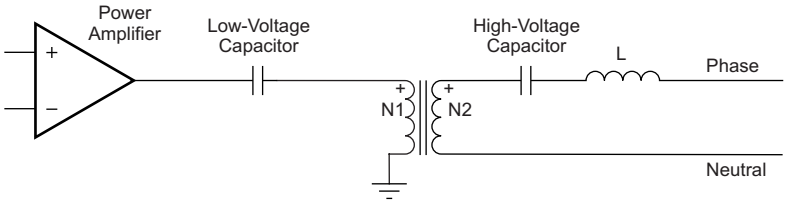

Copyright © 2017, Texas Instruments Incorporated

Figure 49. Simplified Line Coupling Circuit

For additional information on line-coupling interfaces with the AFE030, refer to Application Report SBOA130 *Analog Front-End Design for a Narrowband Power-Line Communications Modem Using the AFE031* (available for download at www.ti.com).

10.4 Circuit Protection

Powerline communications are often located in operating environments that are harsh for electrical components connected to the ac line. Noise or surges from electrical anomalies such as lightning, capacitor bank switching, inductive switching, or other grid fault conditions can damage high-performance integrated circuits if they are not properly protected. The AFE030 can survive even the harshest conditions if several recommendations are followed.

First, dissipate as much of the electrical disturbance before it reaches the AFE030 with a multi-layer approach using metal-oxide varistors (MOVs), transient voltage suppression diodes (TVSs), Schottky diodes, and a Zener diode. Figure 50 shows the recommended strategy for transient overvoltage protection.

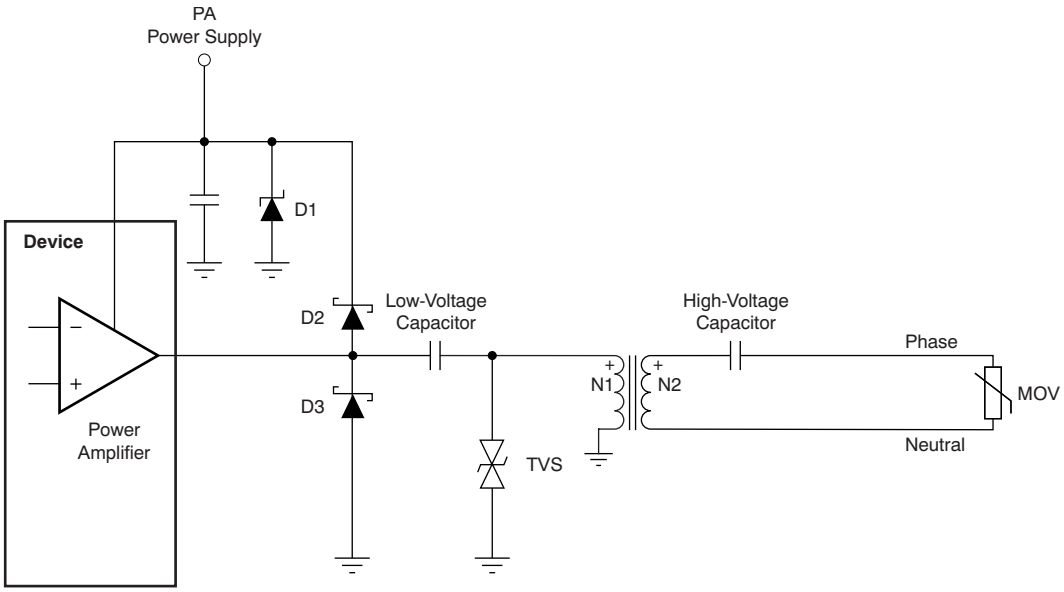

Figure 50. Transient Overvoltage Protection for AFE030

Note that the high-voltage coupling capacitor must be able to withstand pulses up to the clamping protection provided by the MOV. A metalized polypropylene capacitor, such as the 474MKP275KA from Illinois Capacitor, Inc., is rated for 50 Hz to 60 Hz, 250 VAC to 310 VAC, and can withstand 24 impulses of 2.5 kV.

Copyright © 2011–2019, Texas Instruments Incorporated

Circuit Protection (continued)

Table 20 lists several recommended transient protection components.

Table 20. Recommended Transient Protection Devices

	120 VAC, 60 Hz		
COMPONENT	**DESCRIPTION**	**MANUFACTURER**	**MFR PART NO (OR EQUIVALENT)**
D1	Zener diode	Diodes, Inc.	1SMB59xxB (1)
D2, D3	Schottky diode	Diodes, Inc.	1N5819HW
TVS	Transient voltage suppressor	Diodec Semiconductor	P6SMBJxxC (2)
MOV	Varistor	LittleFuse	TMOV20RP140E
HV Cap	High-voltage capacitor	Illinois Capacitor, Inc	474MKP275KA (3)
	240 VAC, 50 Hz		
COMPONENT	**DESCRIPTION**	**MANUFACTURER**	**MFR PART NO (OR EQUIVALENT)**
D1	Zener diode	Diodes, Inc.	1SMB59xxB (1)
D2, D3	Schottky diode	Diodes, Inc.	1N5819HW
TVS	Transient voltage suppressor	Diodec Semiconductor	P6SMBJxxC (2)
MOV	Varistor	LittleFuse	TMOV20RP300E
HV Cap	High-voltage capacitor	Illinois Capacitor, Inc	474MKP275KA (3)

(1) Select the Zener breakdown voltage at the lowest available rating beyond the normal power-supply operating range.
(2) Select the TVS breakdown voltage at or slightly greater than (0.5 × PA_V_S).
(3) A common value for the high-voltage capacitor is 470 nF. Other values may be substituted depending on the requirements of the application. Note that when making a substitution, it is important in terms of reliability that the capacitor be selected from the same familiy or equivalent family of capacitors rated to withstand high-voltage surges.

10.5 Thermal Considerations

In a typical powerline communications application, the AFE030 dissipates 1 W of power when transmitting into the low impedance of the ac line. This amount of power dissipation can increase the junction temperature, which in turn can lead to a thermal overload that results in signal transmission interruptions if the proper thermal design of the PCB has not been performed. Proper management of heat flow from the AFE030 as well as good PCB design and construction are required to ensure proper device temperature, maximize performance, and extend device operating life.

The AFE030 is assembled into a 7-mm^2 x 7-mm^2, 48-lead, QFN package. As Figure 51 shows, this QFN package has a large area exposed thermal pad on the underside that is used to conduct heat away from the AFE030 and into the underlying PCB.

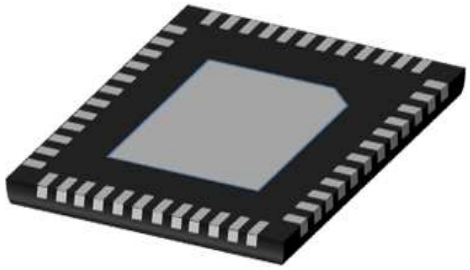

Figure 51. QFN Package with Large Area Exposed Thermal Pad

Copyright © 2011–2019, Texas Instruments Incorporated

Thermal Considerations (continued)

Some heat is conducted from the silicon die surface through the plastic packaging material and is transferred into the ambient environment. Because plastic is a relatively poor conductor of heat, however, this route is not the primary thermal path for heat flow. Heat also flows across the silicon die surface to the bond pads, through the wire bonds, into the package leads, and finally into the top layer of the PCB. While both of these paths for heat flow are important, the majority (nearly 80%) of the heat flows downward, through the silicon die, into the thermally-conductive die attach epoxy, and into the exposed thermal pad on the underside of the package (as shown in Figure 52). Minimizing the thermal resistance of this downward path to the ambient environment maximizes the life and performance of the device.

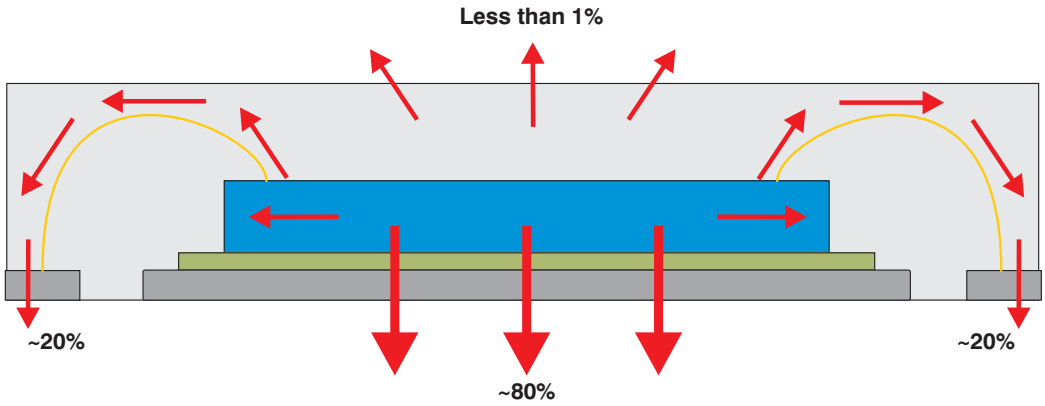

Figure 52. Heat Flow in the QFN Package

The exposed thermal pad must be soldered to the PCB thermal pad. The thermal pad on the PCB should be the same size as the exposed thermal pad on the underside of the QFN package. Refer to Application Report, *QFN/SON PCB Attachment*, literature number SLUA271A, for recommendations on attaching the thermal pad to the PCB. Figure 53 illustrates the direction of heat spreading into the PCB from the device.

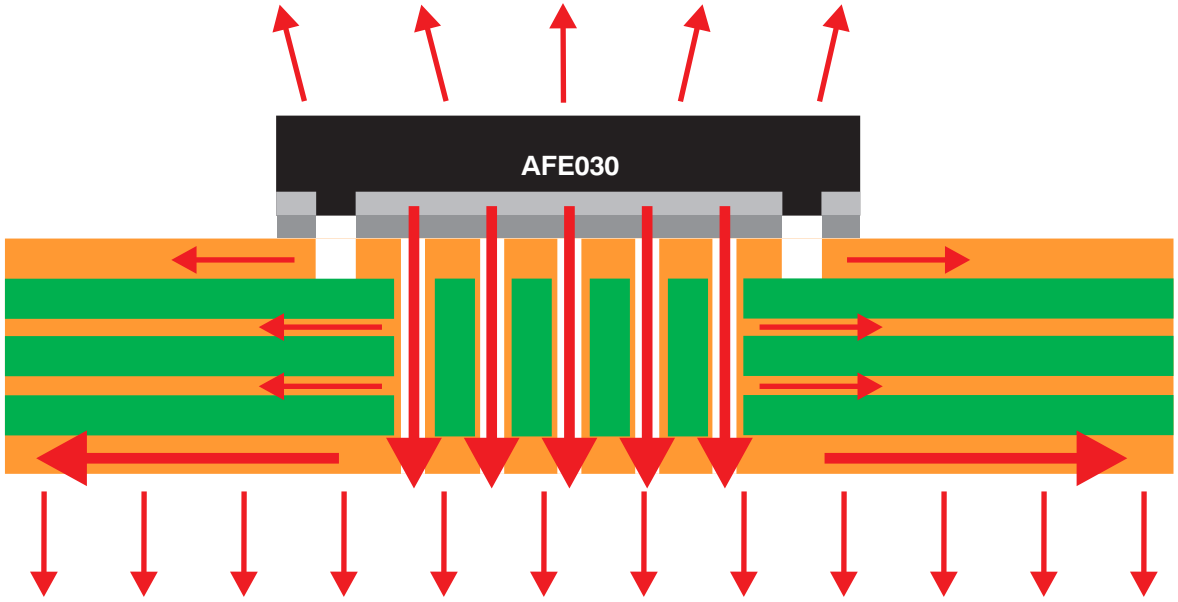

Figure 53. Heat Spreading into PCB

Copyright © 2011–2019, Texas Instruments Incorporated

Thermal Considerations (continued)

The heat spreading into the PCB is maximized if the thermal path is uninterrupted. Best results are achieved if the heat-spreading surfaces are filled with copper to the greatest extent possible, maximizing the percent area covered on each layer. As an example, a thermally robust, multilayer PCB design may consist of four layers with copper (Cu) coverage of 60% in the top layer, 85% and 90% in the inner layers, respectively, and 95% on the bottom layer.

Increasing the number of layers in the PCB, using thicker copper, and increasing the PCB area are all factors that improve the spread of heat. Figure 54 through Figure 56, respectively, show thermal resistance performance as a function of each of these factors.

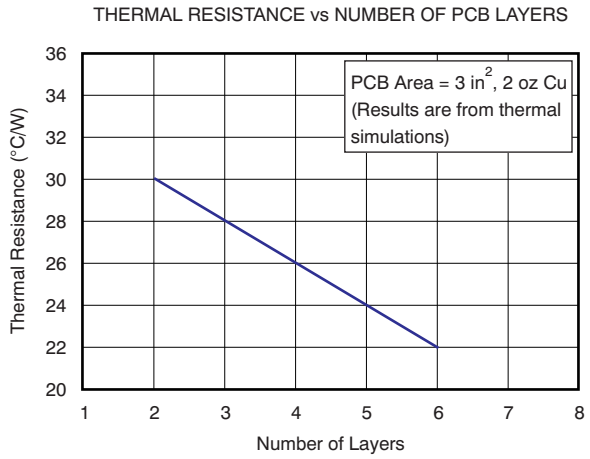

Figure 54. Thermal Resistance as a Function of the Number of Layers in the PCB

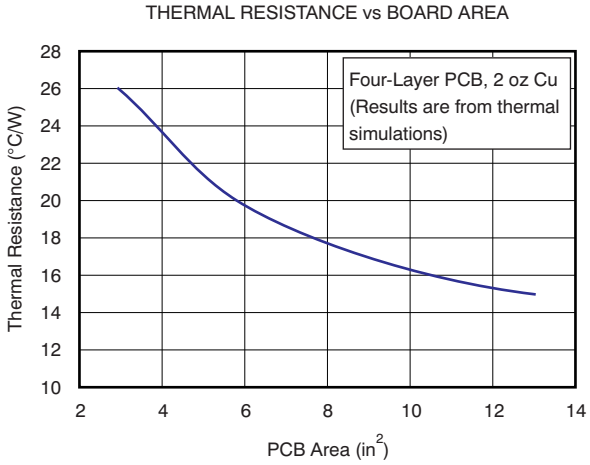

Figure 55. Thermal Resistance as a Function of PCB Area

Thermal Considerations (continued)

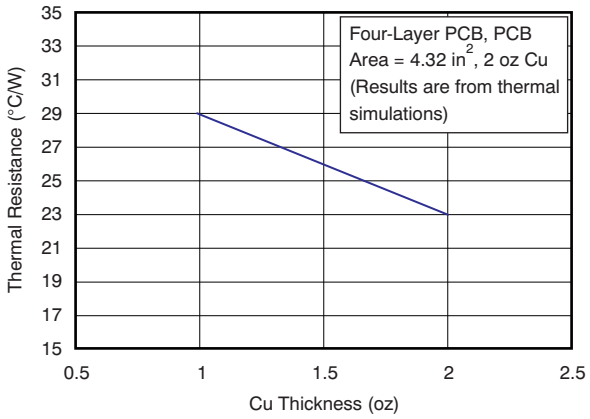

Figure 56. Thermal Resistance as a Function of Copper Thickness

For additional information on thermal PCB design using exposed thermal pad packages, refer to Application Report SBOA130, *Analog Front-End Design for a Narrowband Power-Line Communications Modem Using the AFE031* and Application Report SLMA002E, *PowerPAD™ Thermally-Enhanced Package* (both available for download at www.ti.com).

版权 © 2011–2019, Texas Instruments Incorporated

11 器件和文档支持

11.1 器件支持

11.1.1 开发支持

11.1.1.1 TINA-TI™（免费软件下载）

TINA™是一款简单、功能强大且易于使用的电路仿真程序，此程序基于 SPICE 引擎。 TINA-TI™ 是 TINA 软件的一款免费全功能版本，除了一系列无源和有源模型外，此版本软件还预先载入了一个宏模型库。TINA-TI 提供所有传统的 SPICE 直流、瞬态和频域分析以及其他设计功能。

TINA-TI 可通过模拟电子实验室设计中心免费下载，该软件提供了丰富的后处理能力，允许用户以各种方式设置结果的格式。虚拟仪器提供选择输入波形和探测电路节点、电压以及波形的功能，从而构建一个动态的快速入门工具。

注

这些文件需要安装 TINA 软件（由 DesignSoft™提供）或者 TINA-TI 软件。请从 TINA-TI 文件夹 中下载免费的 TINA-TI 软件。

11.1.1.2 TI 高精度设计

TI 高精度设计的模拟设计方案是由 TI 公司高精度模拟实验室设计 应用 专家创建的模拟解决方案，提供了许多实用电路的工作原理、组件选择、仿真、完整印刷电路板 (PCB) 电路原理图和布局布线、物料清单以及性能测量结果。欲获取 TI 高精度设计，请访问 http://www.ti.com.cn/ww/analog/precision-designs/。

11.1.1.3 WEBENCH®滤波器设计器

WEBENCH® 滤波器设计器是一款简单、功能强大且便于使用的有源滤波器设计程序。借助 WEBENCH 滤波器设计器，用户可使用精选 TI 运算放大器和 TI 供应商合作伙伴提供的无源组件来构建最佳滤波器设计方案。

WEBENCH® 设计中心以基于网络的工具形式提供 WEBENCH® 滤波器设计器。用户通过该工具可在数分钟内完成多级有源滤波器解决方案的设计、优化和仿真。

11.1.2 电力线通信开发者套件

PLC 开发者套件 (TMDSPLCKIT-V3) 可在 www.ti.com/plc 上订购。此套件提供了完整的硬件和软件解决方案，可为各种 应用提供灵活、高效和可靠的网络功能。借助独特的模块化硬件架构和灵活的软件框架，TI 的 PLC 解决方案是唯一一种基于 PLC 且能够通过单一平台支持多协议标准和模块方案的技术。此技术使设计人员能够利用整个全球市场的产品线。该平台的灵活性还使开发人员能够优化特定环境工作条件下的硬件和软件性能，同时可简化端到端产品设计。基于 TI 的强大 C2000™微控制器架构和 AFE031，开发人员可以选择正确的处理能力和外设组合将电力线通信添加到现有设计中或借助 PLC 通信实施完整应用。

借助 C2000 电力线调制解调器开发者套件，可以轻松开发基于软件的 PLC 调制解调器。该套件包含两个基于 C2000 TMS320F28069 controlCARD 和 AFE031 的 PLC 调制解调器。附带的 PLC 套件软件支持多种通信技术，包括 OFDM（PRIME/G3 和 FlexOFDM）和 SFSK。该套件还包含板载 USB JTAG 仿真和 Code Composer Studio。

11.2 文档支持

11.2.1 相关文档

如需相关文档，请参阅以下应用报告和出版物（在 www.ti.com.cn 上提供下载）：

- *《双节点、电力线通信系统的 TINA 仿真原理图》*(SBOU133)
- *《数据集中器中的微控制器》*(SLAT142)
- *《信号：有关运算放大器设计主题的博客文章汇编》电子版* (SLYT701)

11.3 接收文档更新通知

要接收文档更新通知，请导航至 TI.com.cn 上的器件产品文件夹。单击右上角的*通知我* 进行注册，即可每周接收产品信息更改摘要。有关更改的详细信息，请查看任何已修订文档中包含的修订历史记录。

版权 © 2011–2019, Texas Instruments Incorporated

11.4 社区资源

The following links connect to TI community resources. Linked contents are provided "AS IS" by the respective contributors. They do not constitute TI specifications and do not necessarily reflect TI's views; see TI's Terms of Use.

TI E2E™ Online Community ***TI's Engineer-to-Engineer (E2E) Community.*** Created to foster collaboration among engineers. At e2e.ti.com, you can ask questions, share knowledge, explore ideas and help solve problems with fellow engineers.

Design Support ***TI's Design Support*** Quickly find helpful E2E forums along with design support tools and contact information for technical support.

11.5 商标

PowerPAD, TINA-TI, C2000, E2E are trademarks of Texas Instruments.
WEBENCH is a registered trademark of Texas Instruments.
TINA, DesignSoft are trademarks of DesignSoft, Inc.
SPI is a trademark of Motorola, Inc.
All other trademarks are the property of their respective owners.

11.6 静电放电警告

这些装置包含有限的内置 ESD 保护。 存储或装卸时，应将导线一起截短或将装置放置于导电泡棉中，以防止 MOS 门极遭受静电损伤。

11.7 Glossary

SLYZ022 — *TI Glossary*.

This glossary lists and explains terms, acronyms, and definitions.

版权 © 2011–2019, Texas Instruments Incorporated

重要声明和免责声明

TI 均以“原样”提供技术性及可靠性数据（包括数据表）、设计资源（包括参考设计）、应用或其他设计建议、网络工具、安全信息和其他资源，不保证其中不含任何瑕疵，且不做任何明示或暗示的担保，包括但不限于对适销性、适合某特定用途或不侵犯任何第三方知识产权的暗示担保。

所述资源可供专业开发人员应用TI 产品进行设计使用。您将对以下行为独自承担全部责任：(1) 针对您的应用选择合适的TI 产品；(2) 设计、验证并测试您的应用；(3) 确保您的应用满足相应标准以及任何其他安全、安保或其他要求。所述资源如有变更，恕不另行通知。TI 对您使用所述资源的授权仅限于开发资源所涉及TI 产品的相关应用。除此之外不得复制或展示所述资源，也不提供其它TI或任何第三方的知识产权授权许可。如因使用所述资源而产生任何索赔、赔偿、成本、损失及债务等，TI对此概不负责，并且您须赔偿由此对TI 及其代表造成的损害。

TI 所提供产品均受TI 的销售条款 (http://www.ti.com.cn/zh-cn/legal/termsofsale.html) 以及ti.com.cn上或随附TI产品提供的其他可适用条款的约束。TI提供所述资源并不扩展或以其他方式更改TI 针对TI 产品所发布的可适用的担保范围或担保免责声明。

邮寄地址：上海市浦东新区世纪大道 1568 号中建大厦 32 楼，邮政编码：200122
Copyright © 2019 德州仪器半导体技术（上海）有限公司

PACKAGING INFORMATION

Orderable Device	Status (1)	Package Type	Package Drawing	Pins	Package Qty	Eco Plan (2)	Lead finish/ Ball material (6)	MSL Peak Temp (3)	Op Temp (°C)	Device Marking (4/5)	Samples
AFE030AIRGZR	ACTIVE	VQFN	RGZ	48	2500	RoHS & Green	NIPDAU	Level-3-260C-168 HR	-40 to 125	AFE030AI	Samples
AFE030AIRGZT	ACTIVE	VQFN	RGZ	48	250	RoHS & Green	NIPDAU	Level-3-260C-168 HR	-40 to 125	AFE030AI	Samples

(1) The marketing status values are defined as follows:
ACTIVE: Product device recommended for new designs.
LIFEBUY: TI has announced that the device will be discontinued, and a lifetime-buy period is in effect.
NRND: Not recommended for new designs. Device is in production to support existing customers, but TI does not recommend using this part in a new design.
PREVIEW: Device has been announced but is not in production. Samples may or may not be available.
OBSOLETE: TI has discontinued the production of the device.

(2) **RoHS:** TI defines "RoHS" to mean semiconductor products that are compliant with the current EU RoHS requirements for all 10 RoHS substances, including the requirement that RoHS substance do not exceed 0.1% by weight in homogeneous materials. Where designed to be soldered at high temperatures, "RoHS" products are suitable for use in specified lead-free processes. TI may reference these types of products as "Pb-Free".
RoHS Exempt: TI defines "RoHS Exempt" to mean products that contain lead but are compliant with EU RoHS pursuant to a specific EU RoHS exemption.
Green: TI defines "Green" to mean the content of Chlorine (Cl) and Bromine (Br) based flame retardants meet JS709B low halogen requirements of <=1000ppm threshold. Antimony trioxide based flame retardants must also meet the <=1000ppm threshold requirement.

(3) MSL, Peak Temp. - The Moisture Sensitivity Level rating according to the JEDEC industry standard classifications, and peak solder temperature.

(4) There may be additional marking, which relates to the logo, the lot trace code information, or the environmental category on the device.

(5) Multiple Device Markings will be inside parentheses. Only one Device Marking contained in parentheses and separated by a "~" will appear on a device. If a line is indented then it is a continuation of the previous line and the two combined represent the entire Device Marking for that device.

(6) Lead finish/Ball material - Orderable Devices may have multiple material finish options. Finish options are separated by a vertical ruled line. Lead finish/Ball material values may wrap to two lines if the finish value exceeds the maximum column width.

Important Information and Disclaimer: The information provided on this page represents TI's knowledge and belief as of the date that it is provided. TI bases its knowledge and belief on information provided by third parties, and makes no representation or warranty as to the accuracy of such information. Efforts are underway to better integrate information from third parties. TI has taken and continues to take reasonable steps to provide representative and accurate information but may not have conducted destructive testing or chemical analysis on incoming materials and chemicals. TI and TI suppliers consider certain information to be proprietary, and thus CAS numbers and other limited information may not be available for release.

In no event shall TI's liability arising out of such information exceed the total purchase price of the TI part(s) at issue in this document sold by TI to Customer on an annual basis.

TAPE AND REEL INFORMATION

REEL DIMENSIONS

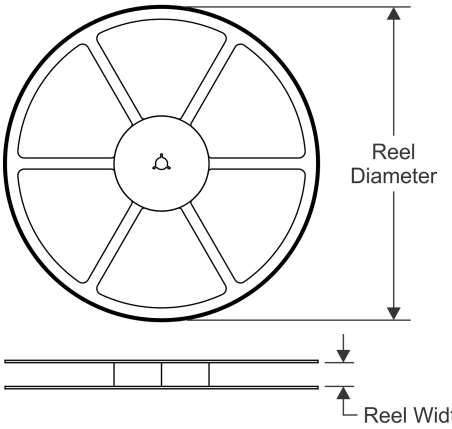

TAPE DIMENSIONS

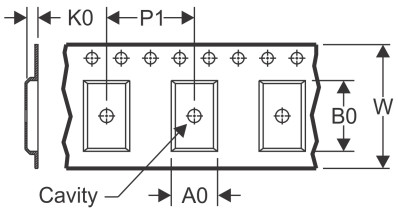

A0	Dimension designed to accommodate the component width
B0	Dimension designed to accommodate the component length
K0	Dimension designed to accommodate the component thickness
W	Overall width of the carrier tape
P1	Pitch between successive cavity centers

QUADRANT ASSIGNMENTS FOR PIN 1 ORIENTATION IN TAPE

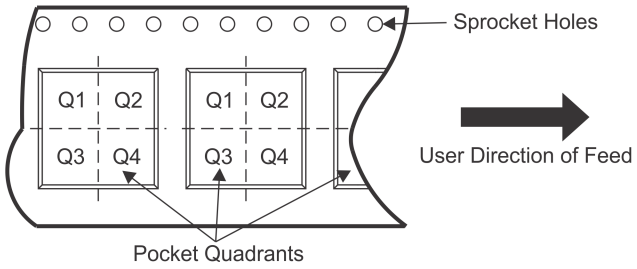

*All dimensions are nominal

Device	Package Type	Package Drawing	Pins	SPQ	Reel Diameter (mm)	Reel Width W1 (mm)	A0 (mm)	B0 (mm)	K0 (mm)	P1 (mm)	W (mm)	Pin1 Quadrant
AFE030AIRGZR	VQFN	RGZ	48	2500	330.0	16.4	7.3	7.3	1.1	12.0	16.0	Q2
AFE030AIRGZT	VQFN	RGZ	48	250	180.0	16.4	7.3	7.3	1.1	12.0	16.0	Q2

TAPE AND REEL BOX DIMENSIONS

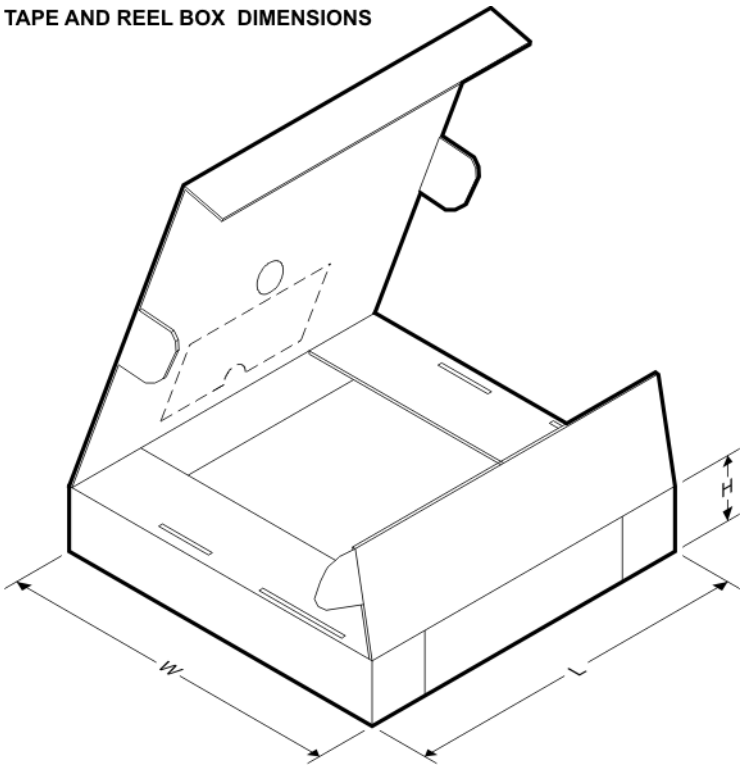

*All dimensions are nominal

Device	Package Type	Package Drawing	Pins	SPQ	Length (mm)	Width (mm)	Height (mm)
AFE030AIRGZR	VQFN	RGZ	48	2500	367.0	367.0	38.0
AFE030AIRGZT	VQFN	RGZ	48	250	210.0	185.0	35.0

GENERIC PACKAGE VIEW

RGZ 48

VQFN - 1 mm max height

7 x 7, 0.5 mm pitch

PLASTIC QUADFLAT PACK- NO LEAD

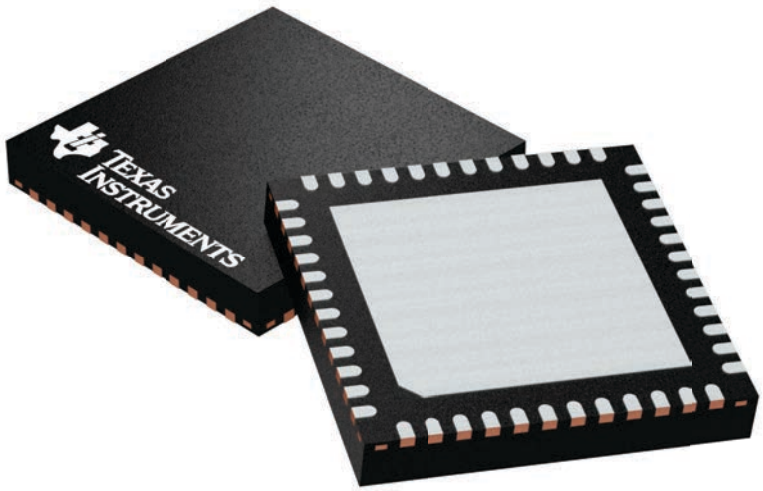

Images above are just a representation of the package family, actual package may vary.
Refer to the product data sheet for package details.

4224671/A

RGZ0048B

PACKAGE OUTLINE

VQFN - 1 mm max height

PLASTIC QUAD FLATPACK - NO LEAD

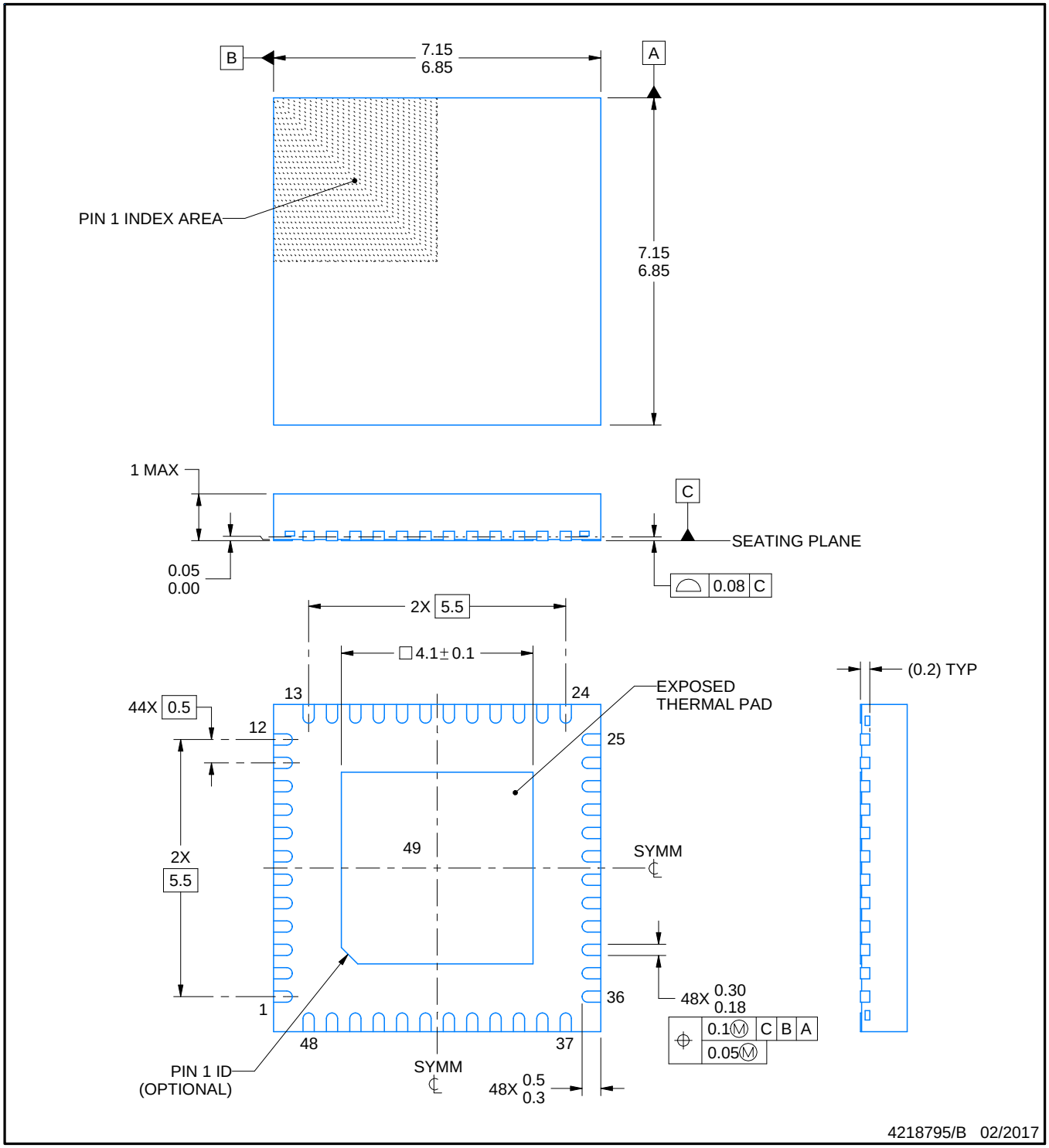

NOTES:

1. All linear dimensions are in millimeters. Any dimensions in parenthesis are for reference only. Dimensioning and tolerancing per ASME Y14.5M.
2. This drawing is subject to change without notice.
3. The package thermal pad must be soldered to the printed circuit board for thermal and mechanical performance.

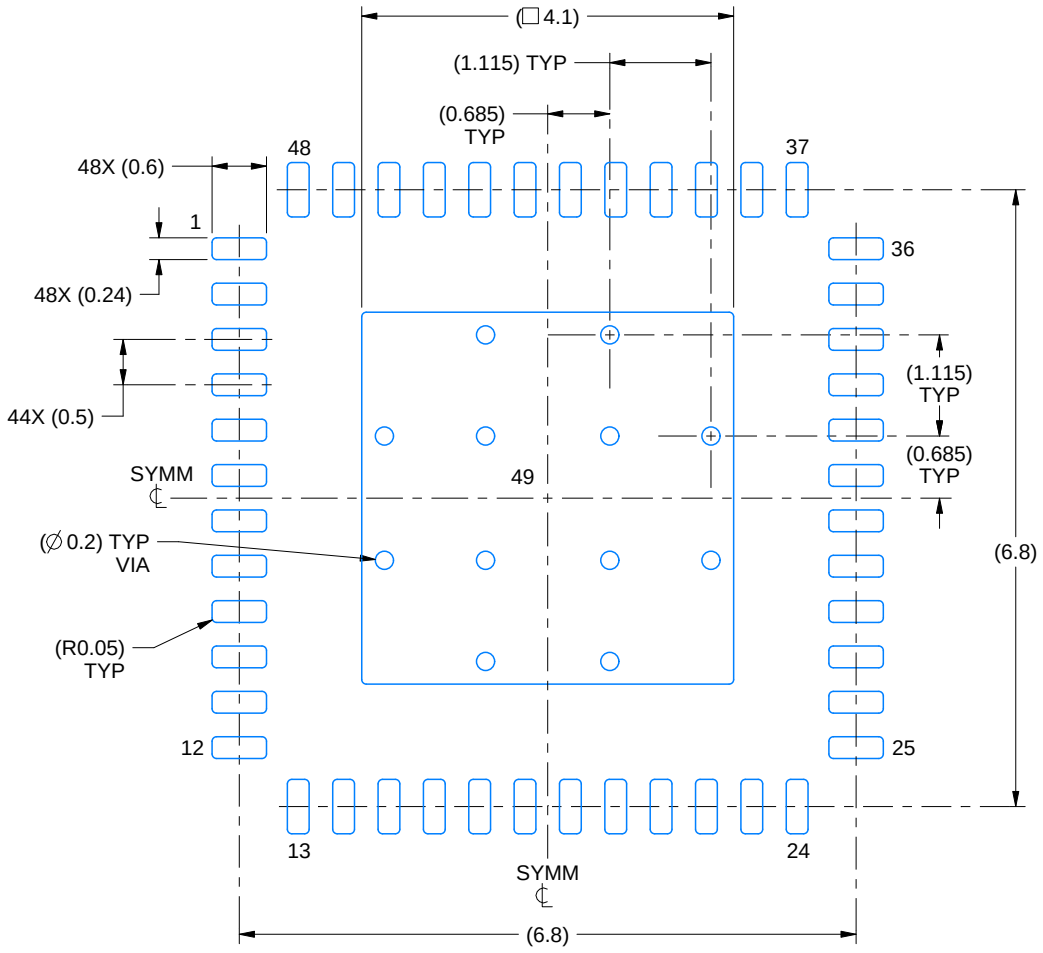

LAND PATTERN EXAMPLE
EXPOSED METAL SHOWN
SCALE:12X

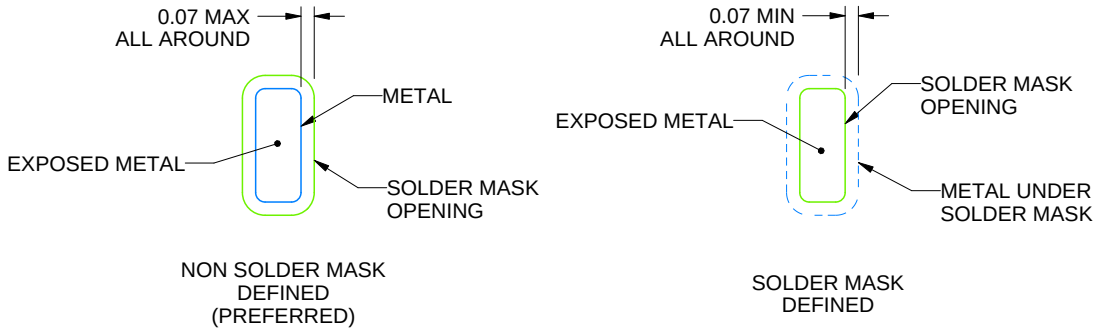

SOLDER MASK DETAILS

4218795/B 02/2017

NOTES: (continued)

4. This package is designed to be soldered to a thermal pad on the board. For more information, see Texas Instruments literature number SLUA271 (www.ti.com/lit/slua271).
5. Vias are optional depending on application, refer to device data sheet. If any vias are implemented, refer to their locations shown on this view. It is recommended that vias under paste be filled, plugged or tented.

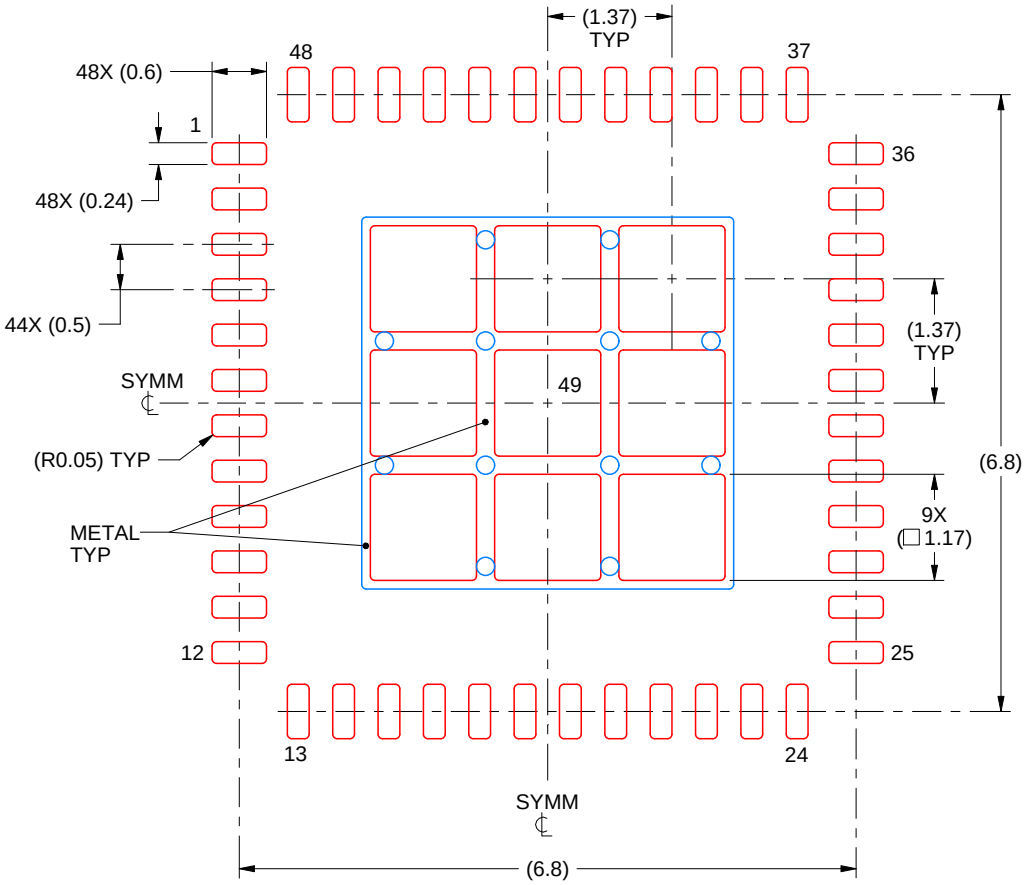

SOLDER PASTE EXAMPLE
BASED ON 0.125 mm THICK STENCIL

EXPOSED PAD 49
73% PRINTED SOLDER COVERAGE BY AREA UNDER PACKAGE
SCALE:12X

4218795/B 02/2017

NOTES: (continued)

6. Laser cutting apertures with trapezoidal walls and rounded corners may offer better paste release. IPC-7525 may have alternate design recommendations.

重要声明和免责声明

TI 均以“原样”提供技术性及可靠性数据（包括数据表）、设计资源（包括参考设计）、应用或其他设计建议、网络工具、安全信息和其他资源，不保证其中不含任何瑕疵，且不做任何明示或暗示的担保，包括但不限于对适销性、适合某特定用途或不侵犯任何第三方知识产权的暗示担保。

所述资源可供专业开发人员应用TI 产品进行设计使用。您将对以下行为独自承担全部责任：(1) 针对您的应用选择合适的TI 产品；(2) 设计、验证并测试您的应用；(3) 确保您的应用满足相应标准以及任何其他安全、安保或其他要求。所述资源如有变更，恕不另行通知。TI 对您使用所述资源的授权仅限于开发资源所涉及TI 产品的相关应用。除此之外不得复制或展示所述资源，也不提供其它TI或任何第三方的知识产权授权许可。如因使用所述资源而产生任何索赔、赔偿、成本、损失及债务等，TI对此概不负责，并且您须赔偿由此对TI 及其代表造成的损害。

TI 所提供产品均受TI 的销售条款 (http://www.ti.com.cn/zh-cn/legal/termsofsale.html) 以及ti.com.cn上或随附TI产品提供的其他可适用条款的约束。TI提供所述资源并不扩展或以其他方式更改TI 针对TI 产品所发布的可适用的担保范围或担保免责声明。

邮寄地址：上海市浦东新区世纪大道 1568 号中建大厦 32 楼，邮政编码：200122
Copyright © 2020 德州仪器半导体技术（上海）有限公司