TLVH431, TLVH432 Low-Voltage Adjustable Precision Shunt Regulators

1 Features

- Low-voltage operation: down to 1.24 V
- Reference voltage tolerances at 25°C
  - 0.5% for B grade
  - 1% for A grade
  - 1.5% for standard grade
- Adjustable output voltage, $V_O = V_{REF}$ to 18 V
- Wide operating cathode current range: 100 μA to 70 mA
- 0.25-Ω typical output impedance
- –40°C to +125°C specifications
- TLVH432 provides alternative pinouts for SOT-23-3 and SOT-89 packages
- Ultra-small SC-70 package offers 40% smaller footprint than SOT-23-3

2 Applications

- Adjustable voltage reference for data Converters
- Secondary side regulation in flyback SMPSs
- Zener replacement with low leakage current
- Voltage monitoring for power rails
- Comparator with integrated reference

3 Description

The TLVH431 and TLVH432 devices are low-voltage 3-terminal adjustable voltage references, with specified thermal stability over applicable industrial and commercial temperature ranges. Output voltage can be set to any value between V_{REF} (1.24 V) and 18 V with two external resistors (see Figure 19). These devices operate from a lower voltage (1.24 V) than the widely used TL431 and TL1431 shunt-regulator references.

When used with an optocoupler, the TLVH431 and TLVH432 devices are ideal voltage references in isolated feedback circuits for 3-V to 3.3-V switching-mode power supplies. They have a typical output impedance of 0.25 Ω. Active output circuitry provides a very sharp turn-on characteristic, making the TLVH431 and TLVH432 devices excellent replacements for low-voltage Zener diodes in many applications, including on-board regulation and adjustable power supplies.

The TLVH432 device is identical to the TLVH431 device, but is offered with different pinouts for the 3-pin SOT-23 and SOT-89 packages.

Device Information(1)

PART NUMBER	PACKAGE	BODY SIZE (NOM)
TLVH43xxDBZ	SOT-23 (5)	2.90 mm × 1.60 mm
TLVH43xxDBZ	SOT-23 (3)	2.92 mm × 1.30 mm
TLVH43xxDCK	SC70 (6)	2.00 mm × 1.25 mm
TLVH43xxLP	TO-92 (3)	4.30 mm × 4.30 mm
TLVH43xxPK	SOT-89 (3)	4.50 mm × 2.50 mm

(1) For all available packages, see the orderable addendum at the end of the data sheet.

Simplified Schematic

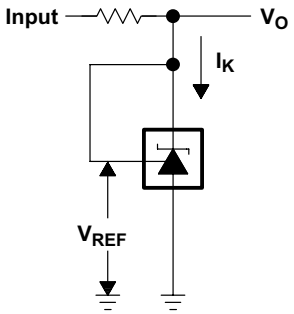

An IMPORTANT NOTICE at the end of this data sheet addresses availability, warranty, changes, use in safety-critical applications, intellectual property matters and other important disclaimers. PRODUCTION DATA.

Table of Contents

1 Features ... 1
2 Applications ... 1
3 Description ... 1
4 Revision History ... 2
5 Pin Configuration and Functions ... 3
6 Specifications ... 4
6.1 Absolute Maximum Ratings ... 4
6.2 ESD Ratings ... 4
6.3 Recommended Operating Conditions ... 4
6.4 Thermal Information ... 4
6.5 TLVH43x Electrical Characteristics ... 5
6.6 TLVH43xA Electrical Characteristics ... 6
6.7 TLVH43xB Electrical Characteristics ... 7
6.8 Typical Characteristics ... 8
7 Parameter Measurement Information ... 15
8 Detailed Description ... 16
8.1 Overview ... 16
8.2 Functional Block Diagram ... 16
8.3 Feature Description ... 17
8.4 Device Functional Modes ... 18
9 Applications and Implementation ... 19
9.1 Application Information ... 19
9.2 Typical Applications ... 20
10 Power Supply Recommendations ... 24
11 Layout ... 24
11.1 Layout Guidelines ... 24
11.2 Layout Example ... 24
12 Device and Documentation Support ... 25
12.1 Documentation Support ... 25
12.2 Receiving Notification of Documentation Updates 25
12.3 Community Resources ... 25
12.4 Related Links ... 25
12.5 Trademarks ... 25
12.6 Electrostatic Discharge Caution ... 25
12.7 Glossary ... 25
13 Mechanical, Packaging, and Orderable Information ... 25

4 Revision History

NOTE: Page numbers for previous revisions may differ from page numbers in the current version.

Changes from Revision K (September 2016) to Revision L	Page
• Added links to applications on TI.com	1
• Changed Thermal Information	4
• Changed load capacitance value to better reflect the device behavior	22

Changes from Revision J (January 2015) to Revision K	Page
• Changed data sheet title	1
• Updated pinout images and *Pin Functions* table	3
• Deleted D package from *Pin Functions* table	3
• Added *Receiving Notification of Documentation Updates* section and *Community Resources* section	25

Changes from Revision I (September 2009) to Revision J	Page
• Added *Applications*, *Device Information* table, *Pin Functions* table, *ESD Ratings* table, *Thermal Information* table, *Typical Characteristics*, *Feature Description* section, *Device Functional Modes*, *Application and Implementation* section, *Power Supply Recommendations* section, *Layout* section, *Device and Documentation Support* section, and *Mechanical, Packaging, and Orderable Information* section.	1
• Deleted *Ordering Information* table.	1

Copyright © 2004–2020, Texas Instruments Incorporated

5 Pin Configuration and Functions

TLVH431 DBV Package
5-Pin SOT-23
Top View

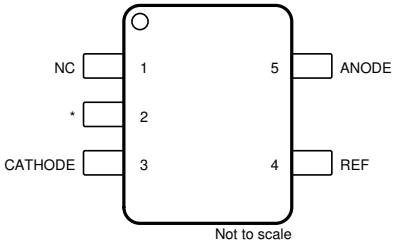

NC – No internal connection

* Pin 2 is attached to Substrate and must be connected to ANODE or left open.

TLVH431 DBZ Package
3-Pin SOT-23
Top View

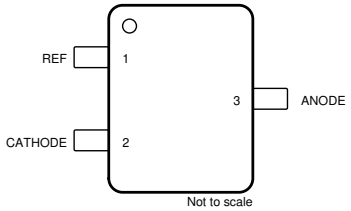

TLVH432 DBZ Package
3-Pin SOT-23
Top View

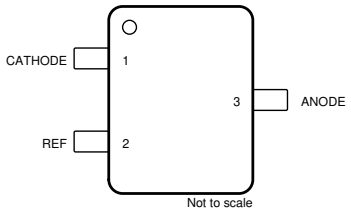

TLVH431 DCK Package
6-Pin SC70
Top View

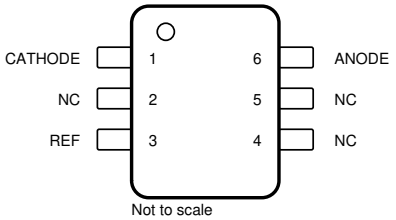

TLVH431 LP Package
3-Pin TO-92
Top View

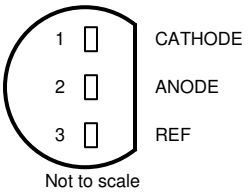

TLVH431 PK Package
3-Pin SOT-89
Top View

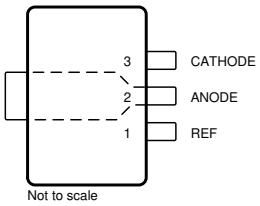

TLVH432 PK Package
3-Pin SOT-89
Top View

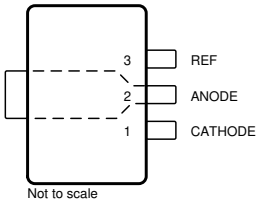

Pin Functions

PIN								TYPE	DESCRIPTION
NAME	TLVH431					TLVH432			
	DBZ	DBV	LP	DCK	PK	DBZ	PK		
CATHODE	2	3	1	1	3	1	1	I/O	Shunt Current/Voltage input
REF	1	4	3	3	1	2	3	I	Threshold relative to common anode
ANODE	3	5	2	6	2	3	2	O	Common pin, normally connected to ground
NC	—	1	—	2, 4, 5	—	—	—	I	No Internal Connection
*	—	2	—	—	—	—	—	I	Substrate Connection

Copyright © 2004–2020, Texas Instruments Incorporated

6 Specifications

6.1 Absolute Maximum Ratings

over operating free-air temperature range (unless otherwise noted)[1]

		MIN	MAX	UNIT
V_{KA}	Cathode voltage[2]		20	V
I_K	Cathode current	–25	80	mA
I_{ref}	Reference current	–0.05	3	mA
T_J	Operating virtual junction temperature		150	°C
T_{stg}	Storage temperature	–65	150	°C

(1) Stresses beyond those listed under *Absolute Maximum Ratings* may cause permanent damage to the device. These are stress ratings only, which do not imply functional operation of the device at these or any other conditions beyond those indicated under *Recommended Operating Conditions*. Exposure to absolute-maximum-rated conditions for extended periods may affect device reliability.
(2) Voltage values are with respect to the anode terminal, unless otherwise noted.

6.2 ESD Ratings

			VALUE	UNIT
$V_{(ESD)}$	Electrostatic discharge	Human body model (HBM), per ANSI/ESDA/JEDEC JS-001[1]	±2000	V
		Charged device model (CDM), per JEDEC specification JESD22-C101[2]	±1000	

(1) JEDEC document JEP155 states that 500-V HBM allows safe manufacturing with a standard ESD control process.
(2) JEDEC document JEP157 states that 250-V CDM allows safe manufacturing with a standard ESD control process.

6.3 Recommended Operating Conditions

See[1]

			MIN	MAX	UNIT
V_{KA}	Cathode voltage		V_{REF}	18	V
I_K	Cathode current (continuous)		0.1	70	mA
T_A	Operating free-air temperature	TLVH43x_C	0	70	°C
		TLVH43x_I	–40	85	
		TLVH43x_Q	–40	125	

(1) Maximum power dissipation is a function of $T_J(max)$, θ_{JA}, and T_A. The maximum allowable power dissipation at any allowable ambient temperature is $P_D = (T_J(max) – T_A) / \theta_{JA}$. Operating at the absolute maximum T_J of 150°C can affect reliability.

6.4 Thermal Information

THERMAL METRIC[1]		TLVH43xx					UNIT
		DCK (SC70)	PK (SOT-89)	DBV (SOT-23)	DBZ (SOT-23)	LP (TO-92)	
		6 PINS	3 PINS	5 PINS	3 PINS	3 PINS	
$R_{\theta JA}$	Junction-to-ambient thermal resistance	259	52	206	206	140	°C/W
$R_{\theta JC(top)}$	Junction-to-case (top) thermal resistance	87	9	131	76	55	°C/W

(1) For more information about traditional and new thermal metrics, see the *Semiconductor and IC Package Thermal Metrics* application report.

Copyright © 2004–2020, Texas Instruments Incorporated

6.5 TLVH43x Electrical Characteristics

at 25°C free-air temperature (unless otherwise noted)

PARAMETER		TEST CONDITIONS			TLVH431 TLVH432			UNIT
					MIN	TYP	MAX	
V_{REF}	Reference voltage	$V_{KA} = V_{REF}$, I_K = 10 mA	T_A = 25°C		1.222	1.24	1.258	V
			T_A = full range, See Figure 18(1)	TLVH431C	1.21		1.27	
				TLVH431I	1.202		1.278	
				TLVH431Q	1.194		1.286	
$V_{REF(dev)}$	V_{REF} deviation over full temperature range(2)	$V_{KA} = V_{REF}$, I_K = 10 mA, See Figure 18(1)		TLVH431C		4	12	mV
				TLVH431I		6	20	
				TLVH431Q		11	31	
$\frac{\Delta V_{REF}}{\Delta V_{KA}}$	Ratio of V_{REF} change to cathode voltage change	I_K = 10 mA, $V_K = V_{REF}$ to 18 V, See Figure 19				–1.5	–2.7	mV/V
I_{ref}	Reference terminal current	I_K = 10 mA, R1 = 10 kΩ, R2 = open, See Figure 19				0.1	0.5	µA
$I_{ref(dev)}$	I_{ref} deviation over full temperature range(2)	I_K = 10 mA, R1 = 10 kΩ, R2 = open, See Figure 19(1)		TLVH431C		0.05	0.3	µA
				TLVH431I		0.1	0.4	
				TLVH431Q		0.15	0.5	
$I_{K(min)}$	Minimum cathode current for regulation	$V_{KA} = V_{REF}$, See Figure 18				60	100	µA
$I_{K(off)}$	Off-state cathode current	V_{REF} = 0, V_{KA} = 18 V, See Figure 20				0.02	0.1	µA
$\lvert z_{KA} \rvert$	Dynamic impedance(3)	$V_{KA} = V_{REF}$, f ≤ 1 kHz, I_K = 0.1 mA to 70 mA, See Figure 18				0.25	0.4	Ω

(1) Full temperature ranges are –40°C to +125°C for TLVH431Q, –40°C to +85°C for TLVH431I, and 0°C to 70°C for TLVH431C.

(2) The deviation parameters $V_{REF(dev)}$ and $I_{ref(dev)}$ are defined as the differences between the maximum and minimum values obtained over the rated temperature range. The average full-range temperature coefficient of the reference input voltage, αV_{REF}, is defined as:

$$\left|\alpha V_{REF}\right|\left(\frac{ppm}{°C}\right) = \frac{\left(\frac{V_{REF(dev)}}{V_{REF}\left(T_A = 25°C\right)}\right) \times 10^6}{\Delta T_A}$$

where ΔT_A is the rated operating free-air temperature range of the device.
αV_{REF} can be positive or negative, depending on whether minimum V_{REF} or maximum V_{REF}, respectively, occurs at the lower temperature.

(3) The dynamic impedance is defined as:

$$\left|z_{ka}\right| = \frac{\Delta V_{KA}}{\Delta I_K}$$

When the device is operating with two external resistors (see Figure 19), the total dynamic impedance of the circuit is defined as:

$$\left|z_{ka}\right|' = \frac{\Delta V}{\Delta I} \approx \left|z_{ka}\right| \times \left(1 + \frac{R1}{R2}\right)$$

6.6 TLVH43xA Electrical Characteristics

at 25°C free-air temperature (unless otherwise noted)

PARAMETER		TEST CONDITIONS			TLVH431A TLVH432A			UNIT
					MIN	TYP	MAX	
V_{REF}	Reference voltage	$V_{KA} = V_{REF}$, I_K = 10 mA	T_A = 25°C		1.228	1.24	1.252	V
			T_A = full range, See Figure 18(1)	TLVH431AC	1.221		1.259	
				TLVH431AI	1.215		1.265	
				TLVH431AQ	1.209		1.271	
$V_{REF(dev)}$	V_{REF} deviation over full temperature range(2)	$V_{KA} = V_{REF}$, I_K = 10 mA, See Figure 18(1)		TLVH431AC		4	12	mV
				TLVH431AI		6	20	
				TLVH431AQ		11	31	
$\frac{\Delta V_{REF}}{\Delta V_{KA}}$	Ratio of V_{REF} change to cathode voltage change	$V_K = V_{REF}$ to 18 V, I_K = 10 mA, See Figure 19				–1.5	–2.7	mV/V
I_{ref}	Reference terminal current	I_K = 10 mA, R1 = 10 kΩ, R2 = open, See Figure 19				0.1	0.5	µA
$I_{ref(dev)}$	I_{ref} deviation over full temperature range(2)	I_K = 10 mA, R1 = 10 kΩ, R2 = open, See Figure 19(1)		TLVH431AC		0.05	0.3	µA
				TLVH431AI		0.1	0.4	
				TLVH431AQ		0.15	0.5	
$I_{K(min)}$	Minimum cathode current for regulation	$V_{KA} = V_{REF}$, See Figure 18				60	100	µA
$I_{K(off)}$	Off-state cathode current	V_{REF} = 0, V_{KA} = 18 V, See Figure 20				0.02	0.1	µA
$\lvert z_{KA} \rvert$	Dynamic impedance(3)	$V_{KA} = V_{REF}$, f ≤ 1 kHz, I_K = 0.1 mA to 70 mA, See Figure 18				0.25	0.4	Ω

(1) Full temperature ranges are –40°C to +125°C for TLVH431Q, –40°C to +85°C for TLVH431I, and 0°C to 70°C for TLVH431C.

(2) The deviation parameters $V_{REF(dev)}$ and $I_{ref(dev)}$ are defined as the differences between the maximum and minimum values obtained over the rated temperature range. The average full-range temperature coefficient of the reference input voltage, αV_{REF}, is defined as:

$$\left|\alpha V_{REF}\right|\left(\frac{ppm}{°C}\right) = \frac{\left(\frac{V_{REF(dev)}}{V_{REF}\left(T_A = 25°C\right)}\right) \times 10^6}{\Delta T_A}$$

where ΔT_A is the rated operating free-air temperature range of the device.
αV_{REF} can be positive or negative, depending on whether minimum V_{REF} or maximum V_{REF}, respectively, occurs at the lower temperature.

(3) The dynamic impedance is defined as:

$$\left|z_{ka}\right| = \frac{\Delta V_{KA}}{\Delta I_K}$$

When the device is operating with two external resistors (see Figure 19), the total dynamic impedance of the circuit is defined as:

$$\left|z_{ka}\right|' = \frac{\Delta V}{\Delta I} \approx \left|z_{ka}\right| \times \left(1 + \frac{R1}{R2}\right)$$

Copyright © 2004–2020, Texas Instruments Incorporated

6.7 TLVH43xB Electrical Characteristics

at 25°C free-air temperature (unless otherwise noted)

PARAMETER		TEST CONDITIONS			TLVH431B TLVH432B			UNIT
					MIN	TYP	MAX	
V_{REF}	Reference voltage	$V_{KA} = V_{REF}$, I_K = 10 mA	T_A = 25°C		1.234	1.24	1.246	V
			T_A = full range, See Figure 18(1)	TLVH431BC	1.227		1.253	
				TLVH431BI	1.224		1.259	
				TLVH431BQ	1.221		1.265	
$V_{REF(dev)}$	V_{REF} deviation over full temperature range(2)	$V_{KA} = V_{REF}$, I_K = 10 mA, See Figure 18(1)		TLVH431BC		4	12	mV
				TLVH431BI		6	20	
				TLVH431BQ		11	31	
$\frac{\Delta V_{REF}}{\Delta V_{KA}}$	Ratio of V_{REF} change to cathode voltage change	I_K = 10 mA, $V_K = V_{REF}$ to 18 V, See Figure 19				–1.5	–2.7	mV/V
I_{ref}	Reference terminal current	I_K = 10 mA, R1 = 10 kΩ, R2 = open, See Figure 19				0.1	0.5	µA
$I_{ref(dev)}$	I_{ref} deviation over full temperature range(2)	I_K = 10 mA, R1 = 10 kΩ, R2 = open, See Figure 19(1)		TLVH431BC		0.05	0.3	µA
				TLVH431BI		0.1	0.4	
				TLVH431BQ		0.15	0.5	
$I_{K(min)}$	Minimum cathode current for regulation	$V_{KA} = V_{REF}$, See Figure 18				60	100	µA
$I_{K(off)}$	Off-state cathode current	V_{REF} = 0, V_{KA} = 18 V, See Figure 20				0.02	0.1	µA
$\lvert z_{KA} \rvert$	Dynamic impedance(3)	$V_{KA} = V_{REF}$, f ≤ 1 kHz, I_K = 0.1 mA to 70 mA, See Figure 18				0.25	0.4	Ω

(1) Full temperature ranges are –40°C to +125°C for TLVH431Q, –40°C to +85°C for TLVH431I, and 0°C to 70°C for TLVH431C.

(2) The deviation parameters $V_{REF(dev)}$ and $I_{ref(dev)}$ are defined as the differences between the maximum and minimum values obtained over the rated temperature range. The average full-range temperature coefficient of the reference input voltage, αV_{REF}, is defined as:

$$\left|\alpha V_{REF}\right|\left(\frac{ppm}{°C}\right) = \frac{\left(\frac{V_{REF(dev)}}{V_{REF}\left(T_A = 25°C\right)}\right) \times 10^6}{\Delta T_A}$$

where ΔT_A is the rated operating free-air temperature range of the device.

αV_{REF} can be positive or negative, depending on whether minimum V_{REF} or maximum V_{REF}, respectively, occurs at the lower temperature.

(3) The dynamic impedance is defined as:

$$\left|z_{ka}\right| = \frac{\Delta V_{KA}}{\Delta I_K}$$

When the device is operating with two external resistors (see Figure 19), the total dynamic impedance of the circuit is defined as:

$$\left|z_{ka}\right|' = \frac{\Delta V}{\Delta I} \approx \left|z_{ka}\right| \times \left(1 + \frac{R1}{R2}\right)$$

6.8 Typical Characteristics

Operation of the device at these or any other conditions beyond those indicated in the *Recommended Operating Conditions* table are not implied.

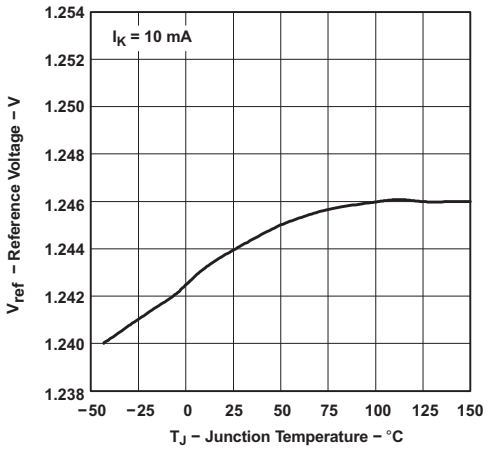

Figure 1. Reference Voltage vs Junction Temperature

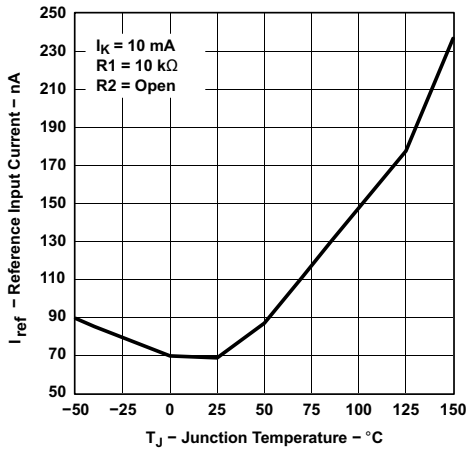

Figure 2. Reference Input Current vs Junction Temperature

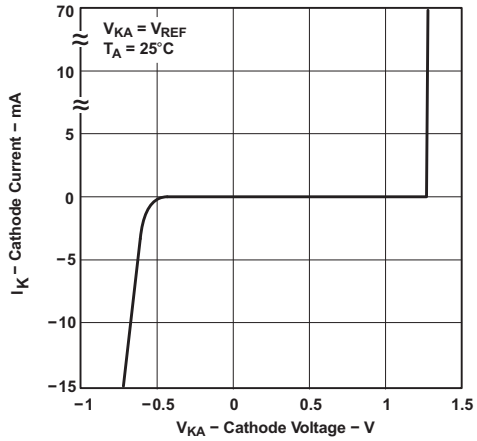

Figure 3. Cathode Current vs Cathode Voltage

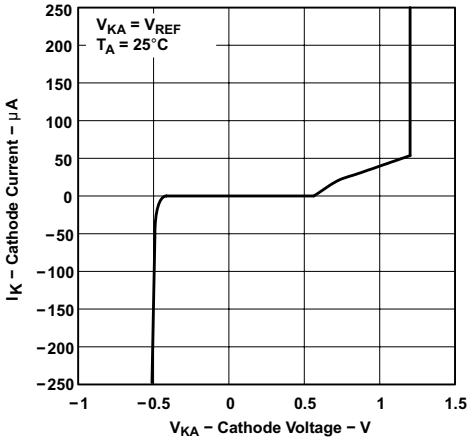

Figure 4. Cathode Current vs Cathode Voltage

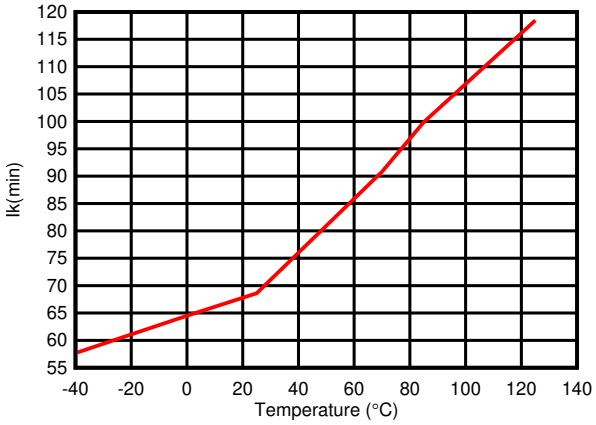

Figure 5. Minimum Cathode Current vs. Temperature

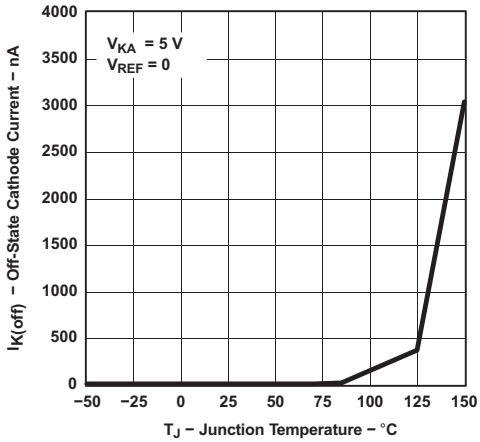

Figure 6. Off-State Cathode Current vs Junction Temperature

Copyright © 2004–2020, Texas Instruments Incorporated

Typical Characteristics (continued)

Operation of the device at these or any other conditions beyond those indicated in the *Recommended Operating Conditions* table are not implied.

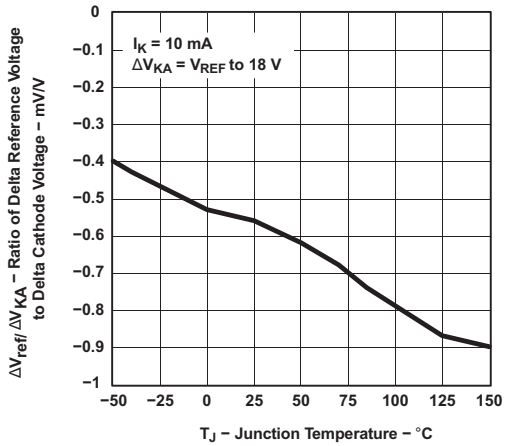

Figure 7. Ratio of Delta Reference Voltage to Delta Cathode Voltage vs Junction Temperature

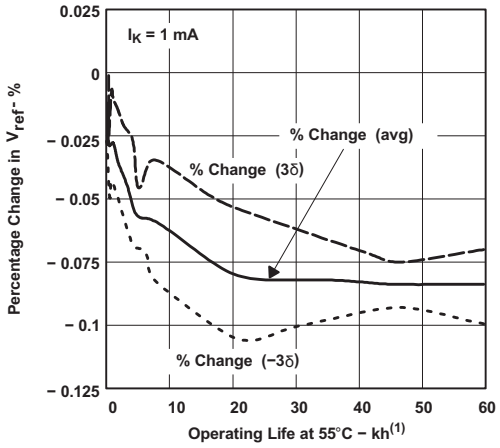

(1) Extrapolated from life-test data taken at 125°C; the activation energy assumed is 0.7 eV.

Figure 8. Percentage Change in V_{REF} vs Operating Life at 55°C

EQUIVALENT INPUT NOISE VOLTAGE vs FREQUENCY

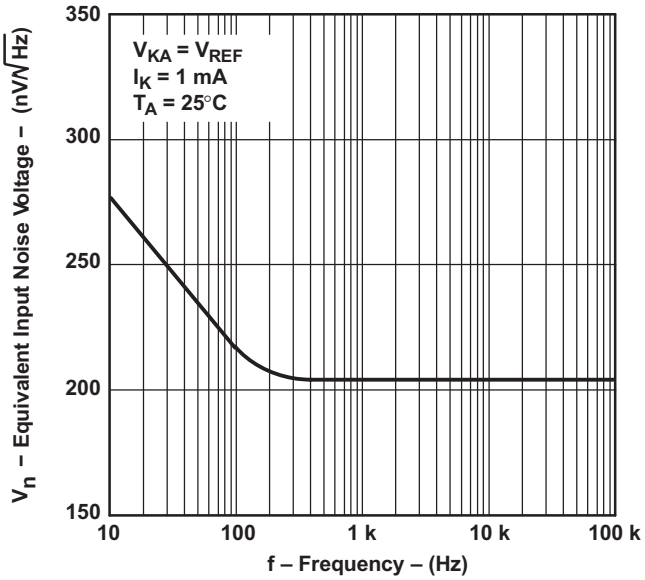

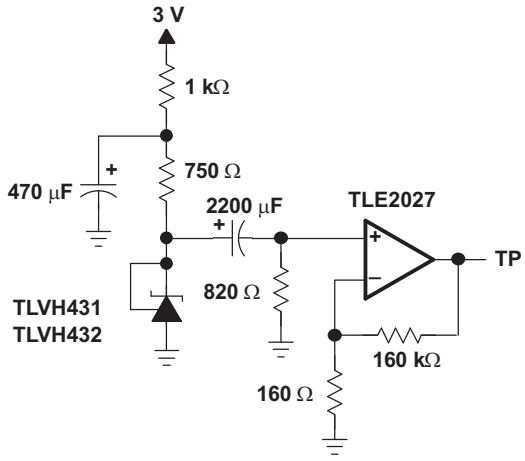

TEST CIRCUIT FOR EQUIVALENT INPUT NOISE VOLTAGE

Figure 9. Equivalent Input Noise Voltage

Typical Characteristics (continued)

Operation of the device at these or any other conditions beyond those indicated in the *Recommended Operating Conditions* table are not implied.

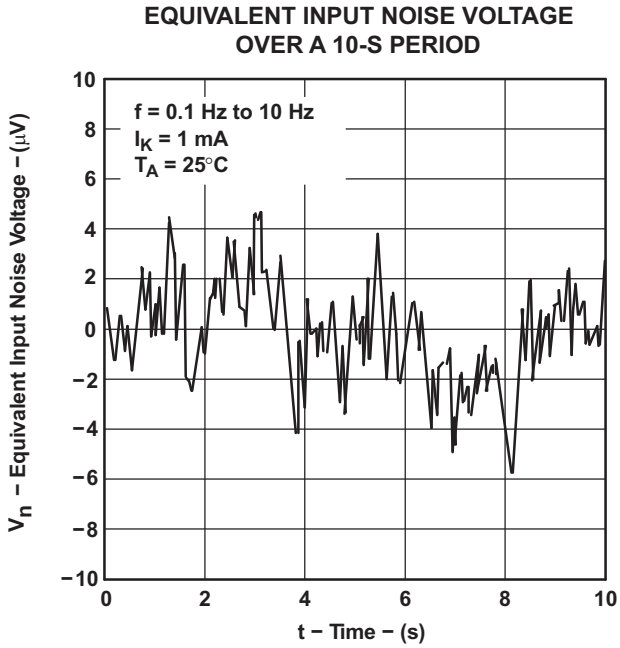

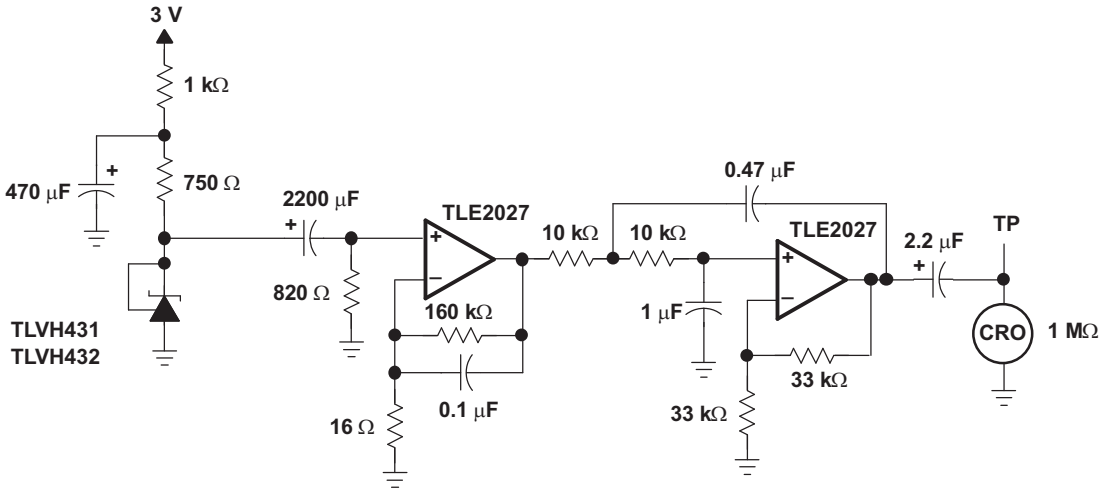

TEST CIRCUIT FOR 0.1-Hz TO 10-Hz EQUIVALENT NOISE VOLTAGE

Figure 10. Equivalent Input Noise Voltage

Copyright © 2004–2020, Texas Instruments Incorporated

Typical Characteristics (continued)

Operation of the device at these or any other conditions beyond those indicated in the *Recommended Operating Conditions* table are not implied.

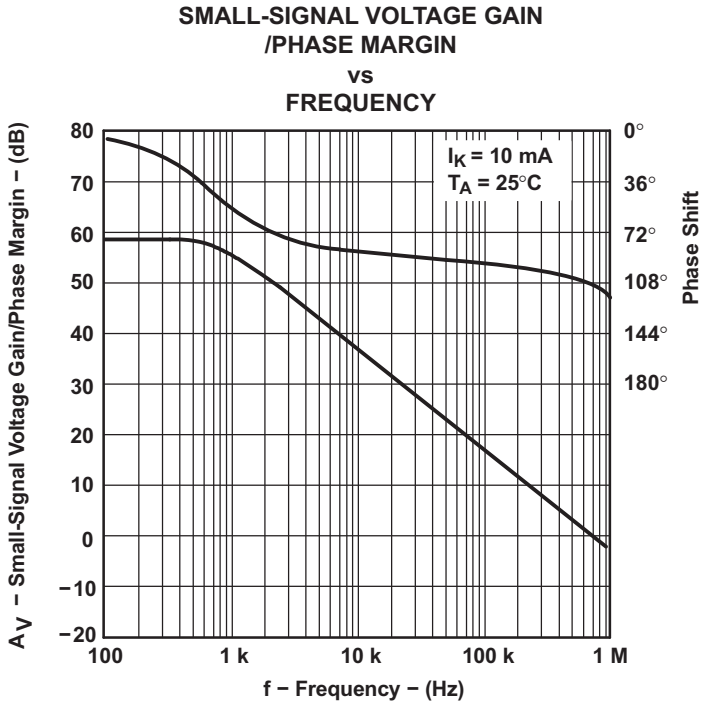

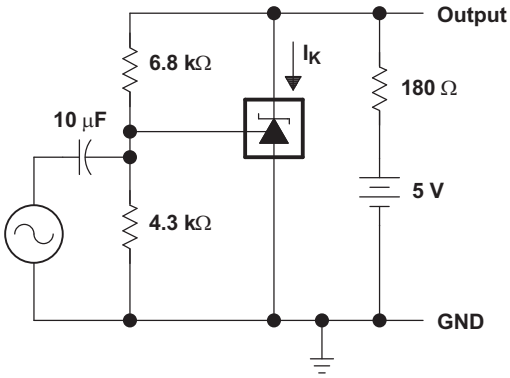

TEST CIRCUIT FOR VOLTAGE GAIN AND PHASE MARGIN

Figure 11. Voltage Gain and Phase Margin

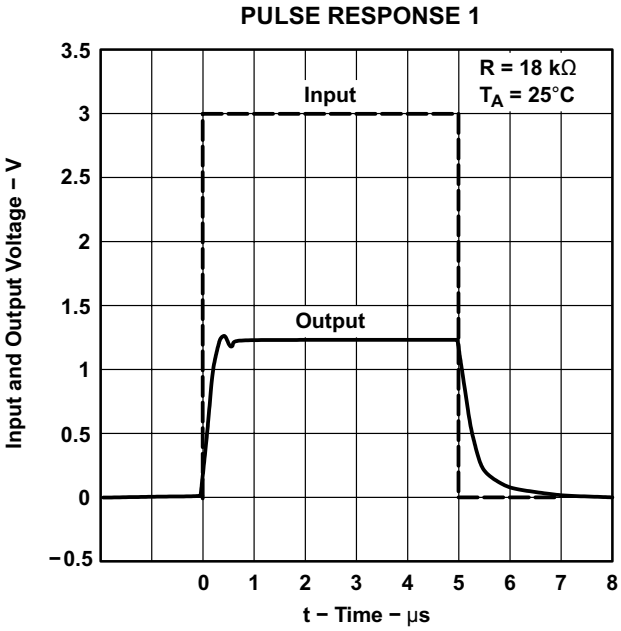

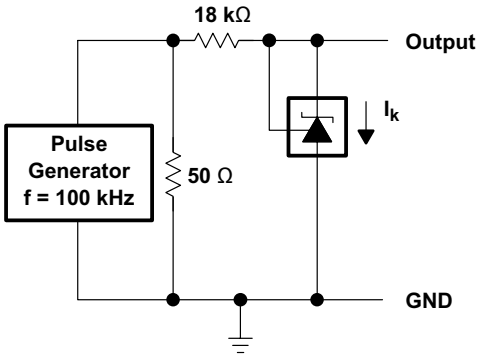

TEST CIRCUIT FOR PULSE RESPONSE 1

Figure 12. Pulse Response 1

Typical Characteristics (continued)

Operation of the device at these or any other conditions beyond those indicated in the *Recommended Operating Conditions* table are not implied.

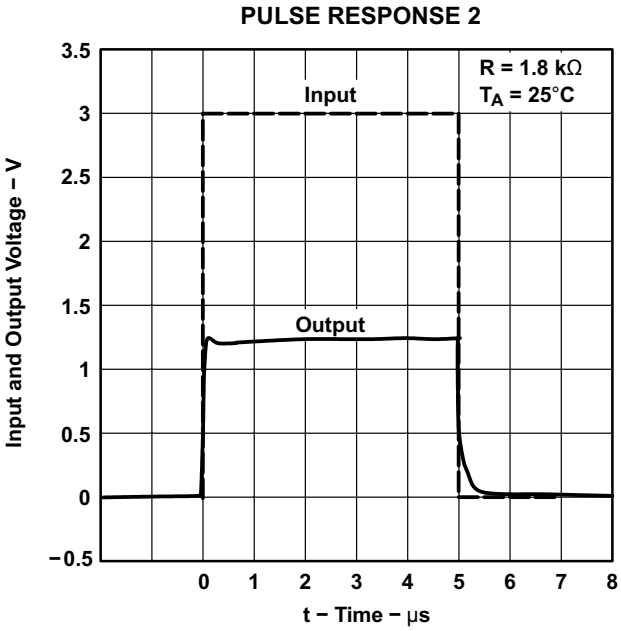

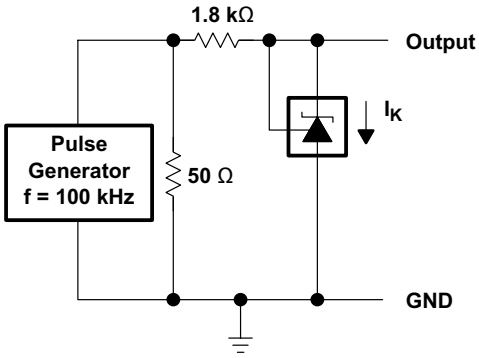

TEST CIRCUIT FOR PULSE RESPONSE 2

Figure 13. Pulse Response 2

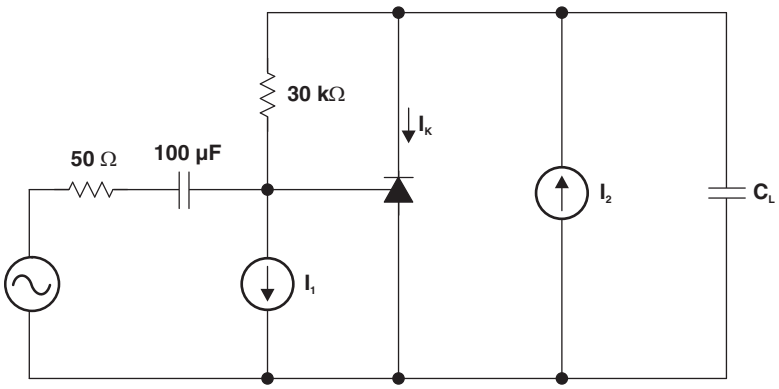

Figure 14. Phase Margin Test Circuit

Copyright © 2004–2020, Texas Instruments Incorporated

Typical Characteristics (continued)

Operation of the device at these or any other conditions beyond those indicated in the *Recommended Operating Conditions* table are not implied.

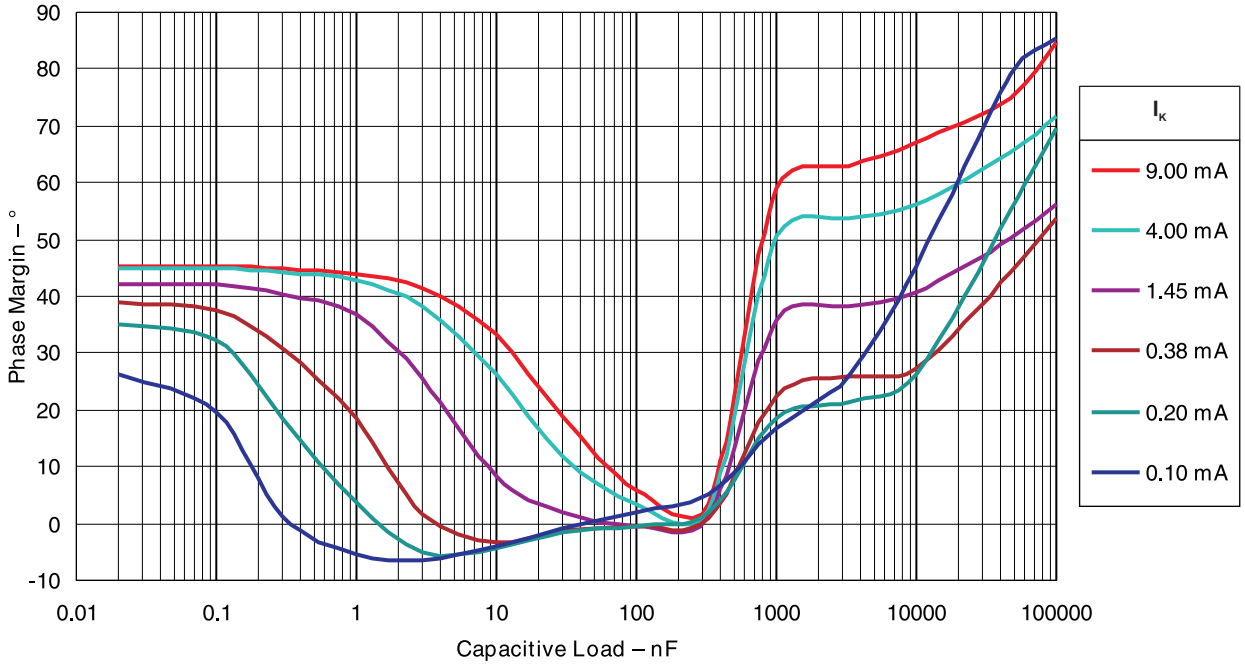

Figure 15. Phase Margin vs Capacitive Load
V_{KA} = V_{REF} (1.25 V), T_A= 25°C

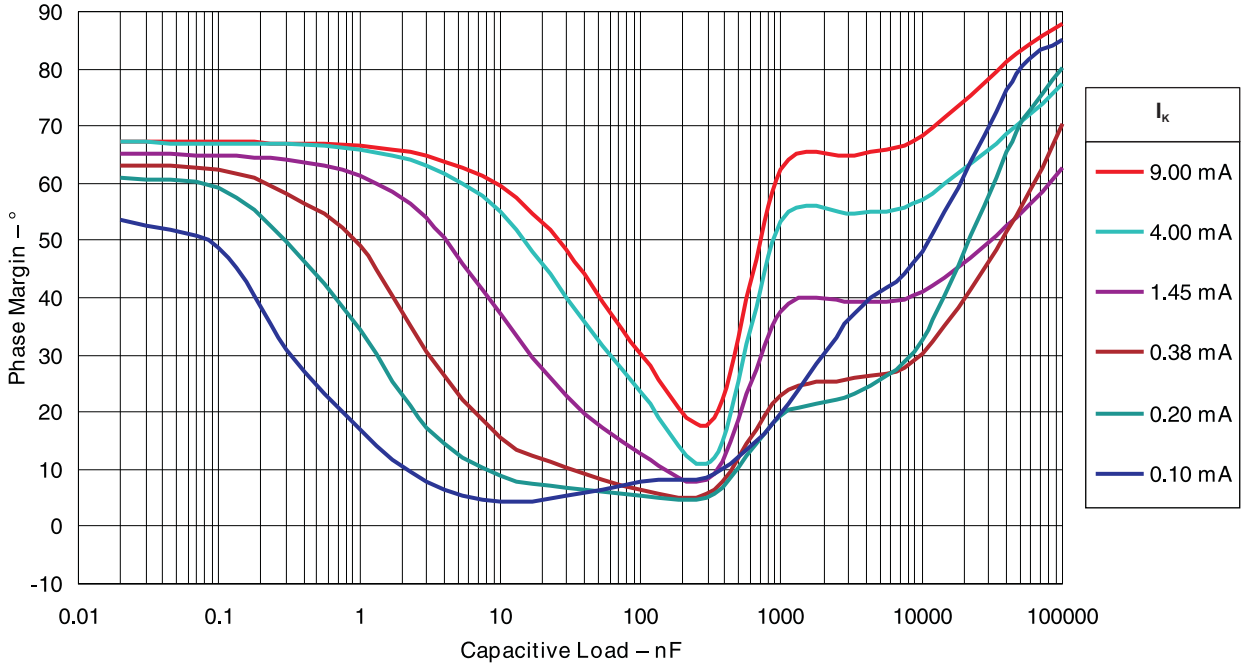

Figure 16. Phase Margin vs Capacitive Load
V_{KA} = 2.50 V, T_A= 25°C

Typical Characteristics (continued)

Operation of the device at these or any other conditions beyond those indicated in the *Recommended Operating Conditions* table are not implied.

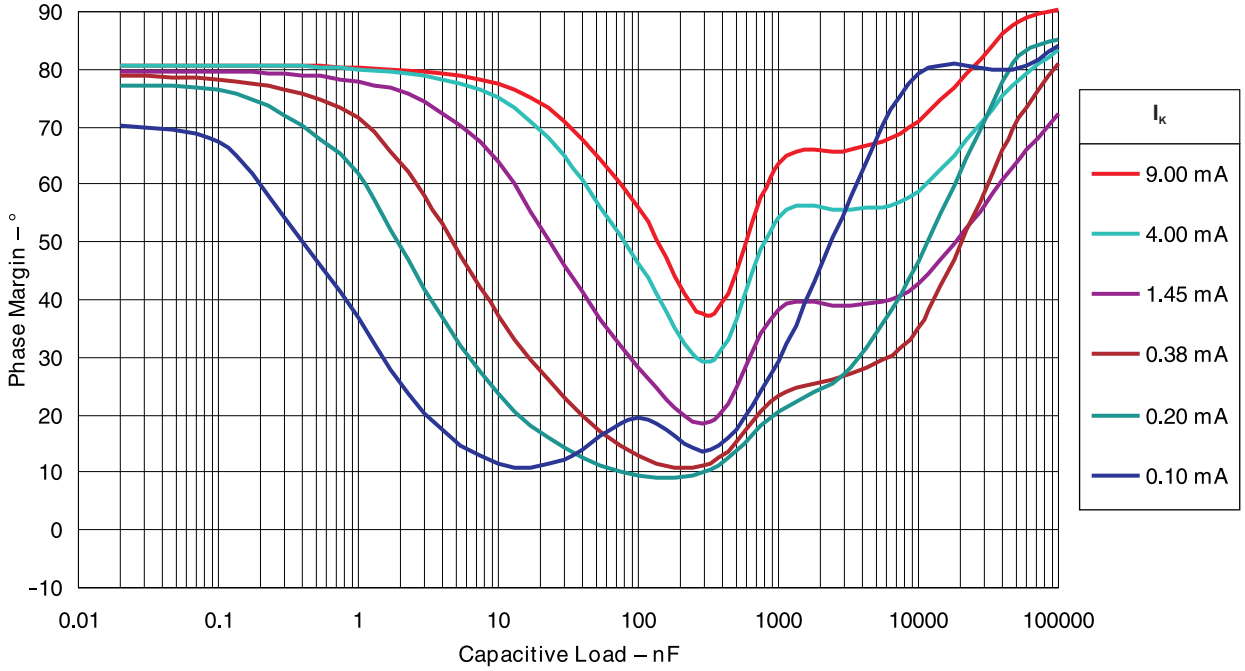

Figure 17. Phase Margin vs Capacitive Load
V_{KA} = 5.00 V, T_A= 25°C

Copyright © 2004–2020, Texas Instruments Incorporated

7 Parameter Measurement Information

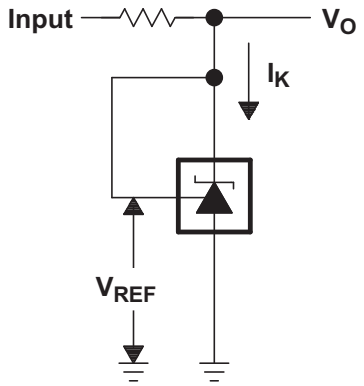

Figure 18. Test Circuit for $V_{KA} = V_{REF}$, $V_O = V_{KA} = V_{REF}$

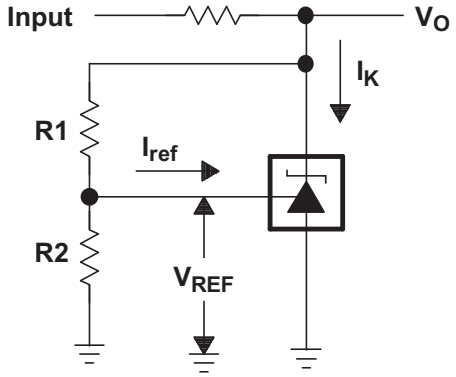

Figure 19. Test Circuit for $V_{KA} > V_{REF}$, $V_O = V_{KA} = V_{REF} \times (1 + R1/R2) + I_{ref} \times R1$

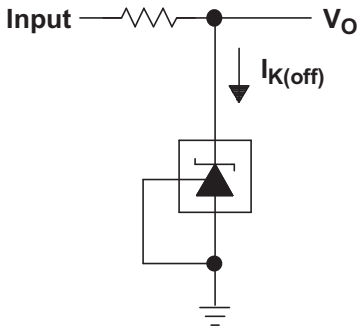

Figure 20. Test Circuit for $I_{K(off)}$

8 Detailed Description

8.1 Overview

TLVH431 is a low power counterpart to TL431, having lower reference voltage (1.24 V versus 2.5 V) for lower voltage adjustability and lower minimum cathode current ($I_{k(min)}$= 100 µA versus 1 mA). Like TL431, TLVH431 is used in conjunction with its key components to behave as a single voltage reference, error amplifier, voltage clamp or comparator with integrated reference.

TLVH431 is also a higher voltage counterpart to TLV431, with cathode voltage adjustability from 1.24 V to 18 V, making this part optimum for a wide range of end equipments in industrial, auto, telecom and computing. In order for this device to behave as a shunt regulator or error amplifier, >100 µA (I_{min}(max)) must be supplied in to the cathode pin. Under this condition, feedback can be applied from the Cathode and Ref pins to create a replica of the internal reference voltage.

Various reference voltage options can be purchased with initial tolerances (at 25°C) of 0.5%, 1%, and 1.5%. These reference options are denoted by B (0.5%), A (1.0%) and blank (1.5%) after the TLVH431.

The TLVH431xC devices are characterized for operation from 0°C to 70°C, the TLVH431xI devices are characterized for operation from –40°C to +85°C, and the TLVH431xQ devices are characterized for operation from –40°C to +125°C.

8.2 Functional Block Diagram

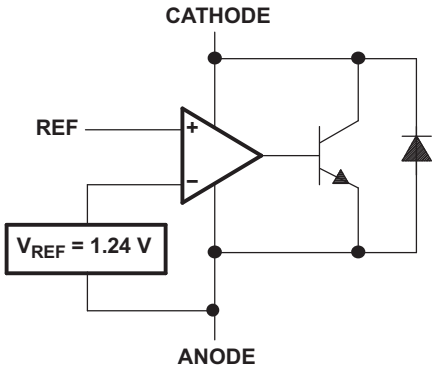

Figure 21. Equivalent Schematic

Copyright © 2004–2020, Texas Instruments Incorporated

Functional Block Diagram (continued)

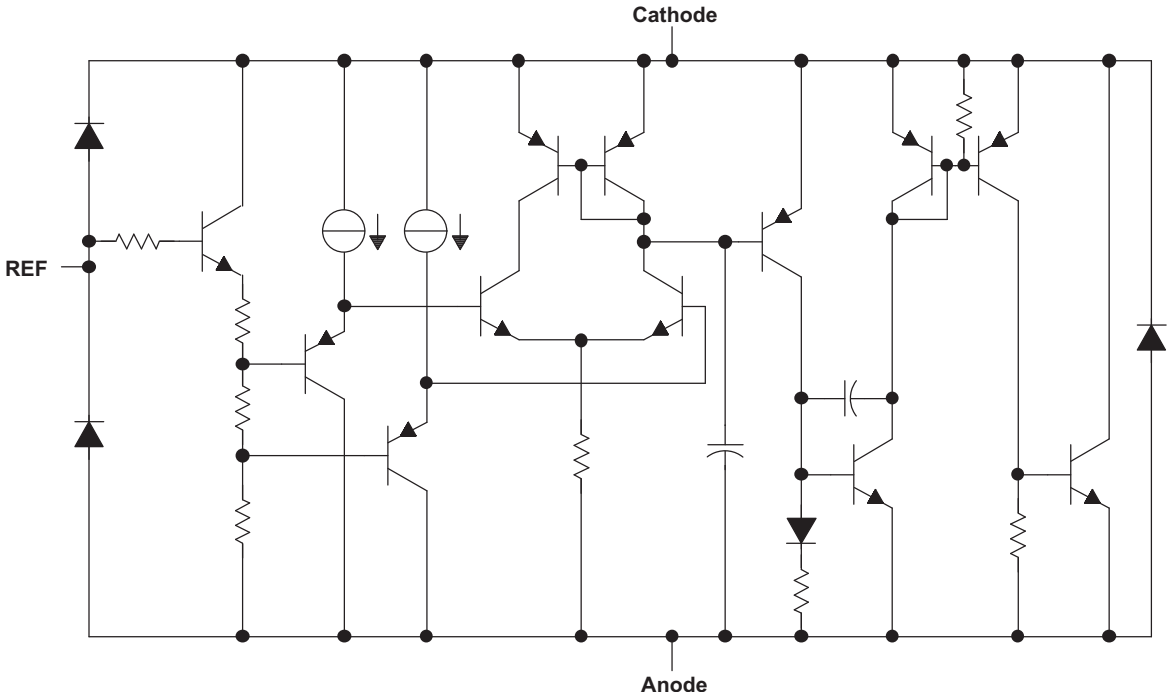

Figure 22. Detailed Schematic

8.3 Feature Description

TLVH431 consists of an internal reference and amplifier that outputs a sink current base on the difference between the reference pin and the virtual internal pin. The sink current is produced by an internal Darlington pair.

When operated with enough voltage headroom (≥ 1.24 V) and cathode current (I_{ka}), TLVH431 forces the reference pin to 1.24 V. However, the reference pin can not be left floating, as it needs Iref ≥ 0.5 µA (see *Specifications*). This is because the reference pin is driven into an NPN, which needs base current in order operate properly.

When feedback is applied from the Cathode and Reference pins, TLVH431 behaves as a Zener diode, regulating to a constant voltage dependent on current being supplied into the cathode. This is due to the internal amplifier and reference entering the proper operating regions. The same amount of current needed in the above feedback situation must be applied to this device in open loop, servo or error amplifying implementations in order for it to be in the proper linear region giving TLVH431 enough gain.

Unlike many linear regulators, TLVH431 is internally compensated to be stable without an output capacitor between the cathode and anode. However, if it is desired to use an output capacitor Figure 15, Figure 16, and Figure 17 can be used as a guide to assist in choosing the correct capacitor to maintain stability.

8.4 Device Functional Modes

8.4.1 Open Loop (Comparator)

When the cathode/output voltage or current of TLVH431 is not being fed back to the reference/input pin in any form, this device is operating in open loop. With proper cathode current (I_{ka}) applied to this device, TLVH431 has the characteristics shown in Figure 4. With such high gain in this configuration, the TLVH431 device is typically used as a comparator. With the reference integrated makes TLVH431 the preferred choice when users are trying to monitor a certain level of a single signal.

8.4.2 Closed Loop

When the cathode/output voltage or current of TLVH431 is being fed back to the reference/input pin in any form, this device is operating in closed loop. The majority of applications involving TLVH431 use it in this manner to regulate a fixed voltage or current. The feedback enables this device to behave as an error amplifier, computing a portion of the output voltage and adjusting it to maintain the desired regulation. This is done by relating the output voltage back to the reference pin in a manner to make it equal to the internal reference voltage, which can be accomplished through resistive or direct feedback.

Copyright © 2004–2020, Texas Instruments Incorporated

9 Applications and Implementation

NOTE

Information in the following applications sections is not part of the TI component specification, and TI does not warrant its accuracy or completeness. TI's customers are responsible for determining suitability of components for their purposes. Customers should validate and test their design implementation to confirm system functionality.

9.1 Application Information

Figure 23 shows the TLVH431, TLVH431A, or TLVH431B used in a 3.3-V isolated flyback supply. Output voltage V_O can be as low as reference voltage V_{REF} (1.24 V ± 1%). The output of the regulator, plus the forward voltage drop of the optocoupler LED (1.24 + 1.4 = 2.64 V), determine the minimum voltage that can be regulated in an isolated supply configuration. Regulated voltage as low as 2.7 Vdc is possible in the topology shown in Figure 23.

The TLVH431 family of devices are prevalent in these applications, being designers go to choice for secondary side regulation. Due to this prevalence, this section explains operation and design in both states of TLVH431 that this application will see, open loop (Comparator + V_{REF}) and closed loop (Shunt Regulator).

Further information about system stability and using a TLVH431 device for compensation see *Compensation Design With TL431 for UCC28600*, SLUA671.

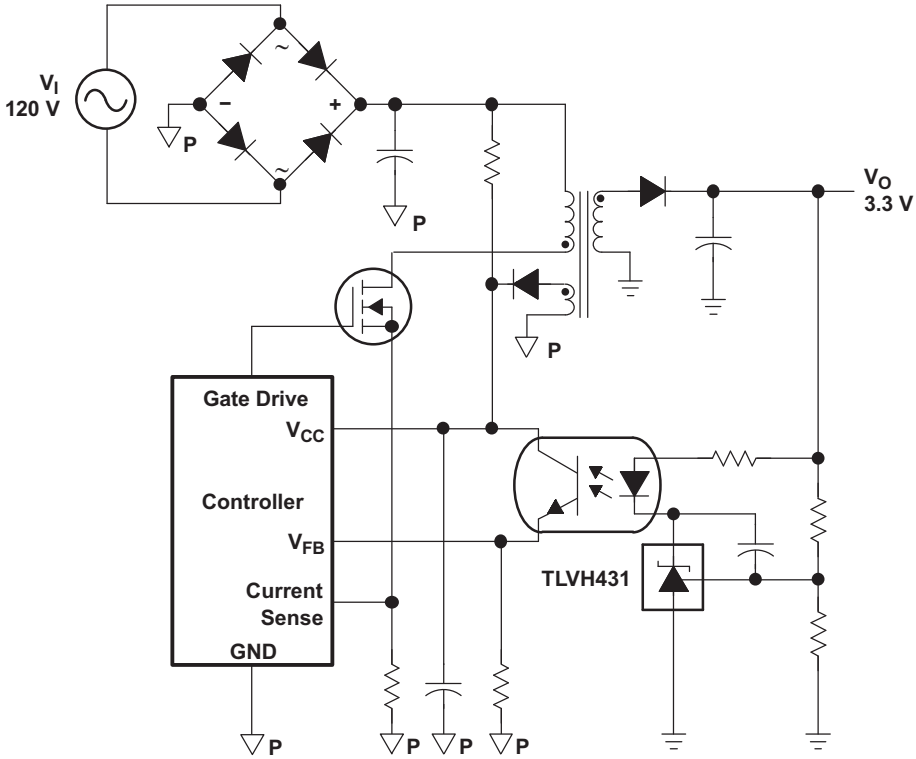

Figure 23. Flyback With Isolation Using TLVH431 or TLVH432 as Voltage Reference and Error Amplifier

9.2 Typical Applications

9.2.1 Comparator With Integrated Reference (Open Loop)

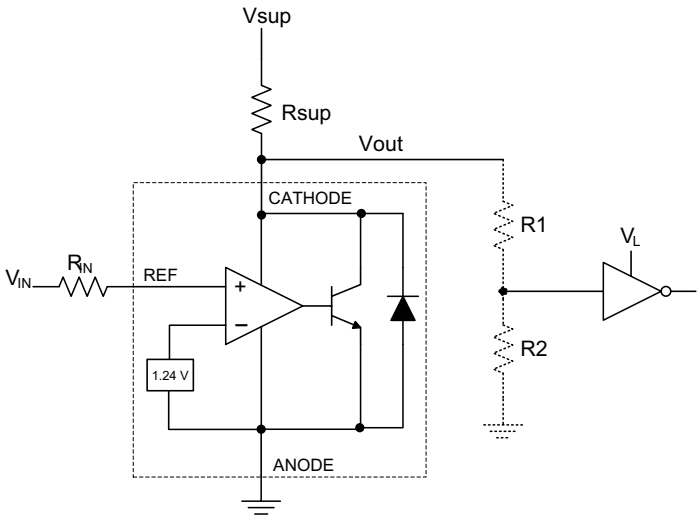

Figure 24. Comparator Application Schematic

9.2.1.1 Design Requirements

For this design example, use the parameters listed in Table 1 as the input parameters.

Table 1. Design Parameters

DESIGN PARAMETER	EXAMPLE VALUE
Input Voltage Range	0 V to 5 V
Input Resistance	10 kΩ
Supply Voltage	9 V
Cathode Current (I_k)	500 µA
Output Voltage Level	~1 V - V_{sup}
Logic Input Thresholds V_{IH}/V_{IL}	V_L

9.2.1.2 Detailed Design Procedure

When using TLVH431 as a comparator with reference, determine the following:

- Input voltage range
- Reference voltage accuracy
- Output logic input high and low level thresholds
- Current source resistance

9.2.1.2.1 Basic Operation

In the configuration shown in Figure 24, TLVH431 behaves as a comparator, comparing the V_{ref} pin voltage to the internal virtual reference voltage. When provided a proper cathode current (I_k), TLVH431 will have enough open loop gain to provide a quick response. With the TLVH431's max Operating Current (I_{min}) being 100 uA and up to 150 uA over temperature, operation below that could result in low gain, leading to a slow response.

Copyright © 2004–2020, Texas Instruments Incorporated

9.2.1.2.2 Overdrive

Slow or inaccurate responses can also occur when the reference pin is not provided enough overdrive voltage. This is the amount of voltage that is higher than the internal virtual reference. The internal virtual reference voltage will be within the range of 1.24 V ±(0.5%, 1.0% or 1.5%) depending on which version is being used.

The more overdrive voltage provided, the faster the TLVH431 will respond. See figures Figure 25 and Figure 26, for the output responses to various input voltages.

For applications where TLVH431 is being used as a comparator, it is best to set the trip point to greater than the positive expected error (that is, +1.0% for the A version). For fast response, setting the trip point to > 10% of the internal V_{ref} should suffice.

For minimal voltage drop or difference from Vin to the ref pin, it is recommended to use an input resistor <10 kΩ to provide I_{ref}.

9.2.1.2.3 Output Voltage and Logic Input Level

In order for TLVH431 to properly be used as a comparator, the logic output must be readable by the receiving logic device. This is accomplished by knowing the input high and low level threshold voltage levels, typically denoted by V_{IH} and V_{IL}.

As shown in Figure 25 and Figure 26, TLVH431's output low level voltage in open-loop/comparator mode is approximately 1 V, which is sufficient for some 3.3 V supplied logic. However, would not work for 2.5 V and 1.8 V supplied logic. To accommodate this a resistive divider can be tied to the output to attenuate the output voltage to a voltage legible to the receiving low voltage logic device.

TLVH431's output high voltage is approximately V_{SUP} due to TLVH431 being open-collector. If V_{SUP} is much higher than the receiving logic's maximum input voltage tolerance, the output must be attenuated to accommodate the outgoing logic's reliability.

When using a resistive divider on the output, be sure to make the sum of the resistive divider (R1 and R2 in Figure 24) is much greater than R_{SUP} in order to not interfere with TLVH431's ability to pull close to V_{SUP} when turning off.

9.2.1.2.3.1 Input Resistance

TLVH431 requires an input resistance in this application in order to source the reference current (I_{REF}) needed from this device to be in the proper operating regions while turning on. The actual voltage seen at the ref pin will be $V_{REF} = V_{IN} – I_{REF} × R_{IN}$. Because I_{REF} can be as high as 0.5 µA, TI recommends to use a resistance small enough that will mitigate the error that I_{REF} creates from V_{IN}.

9.2.1.3 Application Curves

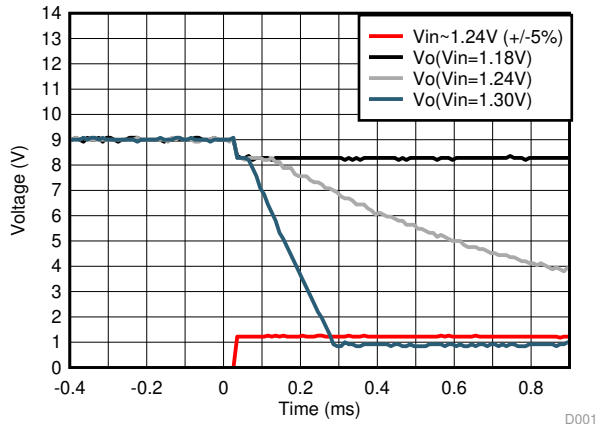

Figure 25. Output Response With Small Overdrive Voltages

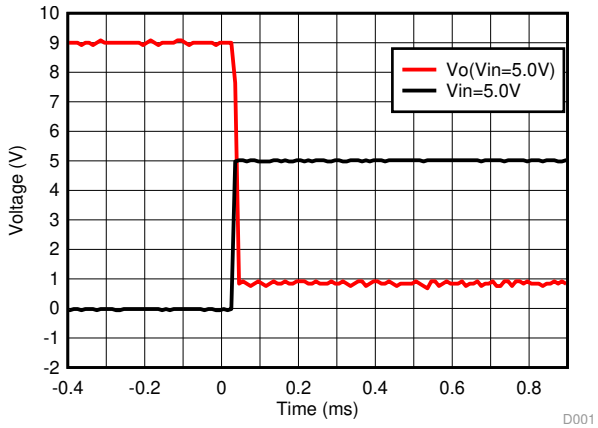

Figure 26. Output Response With Large Overdrive Voltage

9.2.2 Shunt Regulator/Reference

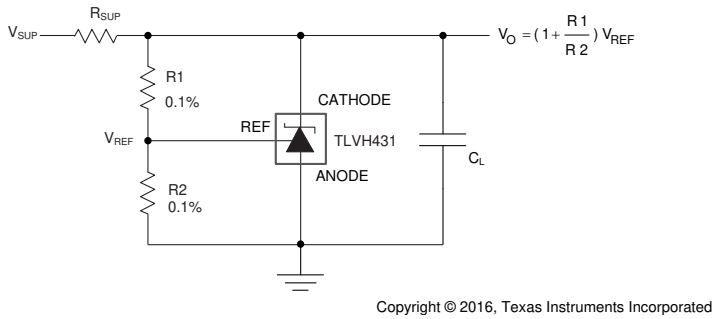

Figure 27. Shunt Regulator Schematic

9.2.2.1 Design Requirements

For this design example, use the parameters listed in Table 2 as the input parameters.

Table 2. Design Parameters

DESIGN PARAMETER	EXAMPLE VALUE
Reference Initial Accuracy	1.0%
Supply Voltage	6 V
Cathode Current (Ik)	500 µA
Output Voltage Level	1.24 V - 18 V
Load Capacitance	4.7 µF
Feedback Resistor Values and Accuracy (R1 and R2)	10 kΩ

9.2.2.2 Detailed Design Procedure

When using TLVH431 as a Shunt Regulator, determine the following:

- Input voltage range
- Temperature range
- Total accuracy
- Cathode current
- Reference initial accuracy
- Output capacitance

9.2.2.2.1 Programming Output/Cathode Voltage

To program the cathode voltage to a regulated voltage a resistive bridge must be shunted between the cathode and anode pins with the mid point tied to the reference pin. This can be seen in Figure 27, with R1 and R2 being the resistive bridge. The cathode/output voltage in the shunt regulator configuration can be approximated by the equation shown in Figure 27. The cathode voltage can be more accurately determined by taking in to account the cathode current:

V_O=(1+R1/R2) × V_{REF}-I_{REF} × R1

In order for this equation to be valid, TLVH431 must be fully biased so that it has enough open loop gain to mitigate any gain error. This can be done by meeting the I_{min} spec denoted in *Specifications*.

Copyright © 2004–2020, Texas Instruments Incorporated

9.2.2.2.2 Total Accuracy

When programming the output above unity gain (V_{KA}=V_{REF}), TLVH431 is susceptible to other errors that may effect the overall accuracy beyond V_{REF}. These errors include:

- R1 and R2 accuracies
- $V_{I(dev)}$ - Change in reference voltage over temperature
- ΔV_{ref} / ΔV_{KA} - Change in reference voltage to the change in cathode voltage
- $|z_{KA}|$ - Dynamic impedance, causing a change in cathode voltage with cathode current

Worst case, cathode voltage can be determined taking all of the variables in to account. The application note *Setting the Shunt Voltage on an Adjustable Shunt Regulator,* SLVA445, assists designers in setting the shunt voltage to achieve optimum accuracy for this device.

9.2.2.2.3 Stability

Though TLVH431 is stable with no capacitive load, the device that receives the shunt regulator's output voltage could present a capacitive load that is within the TLVH431 region of stability, shown in Figure 15, Figure 16 and Figure 17. Also, designers may use capacitive loads to improve the transient response or for power supply decoupling.

TI recommends to choose capacitors that will give a phase margin > 5° to guarantee stability of the TLVH431.

9.2.2.3 Application Curve

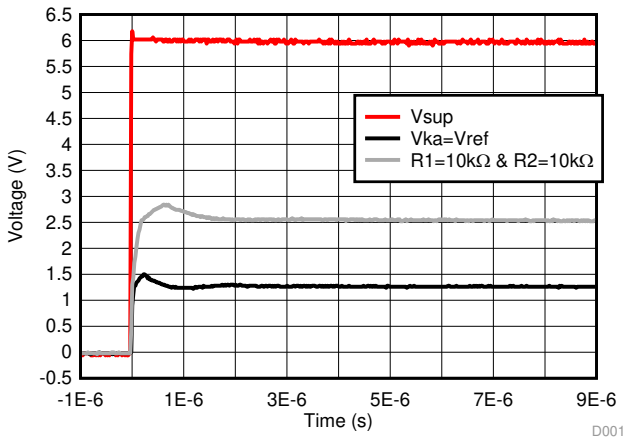

Figure 28. TLVH431 Start-up Response

10 Power Supply Recommendations

When using TLVH431 as a Linear Regulator to supply a load, designers will typically use a bypass capacitor on the output/cathode pin. When doing this, be sure that the capacitance is within the stability criteria shown in Figure 15, Figure 16, and Figure 17.

To not exceed the maximum cathode current, be sure that the supply voltage is current limited. Also, limit the current being driven into the Ref pin, as not to exceed its absolute maximum rating.

For applications shunting high currents, pay attention to the cathode and anode trace lengths, adjusting the width of the traces to have the proper current density.

11 Layout

11.1 Layout Guidelines

Place decoupling capacitors as close to the device as possible. Use appropriate widths for traces when shunting high currents to avoid excessive voltage drops.

11.2 Layout Example

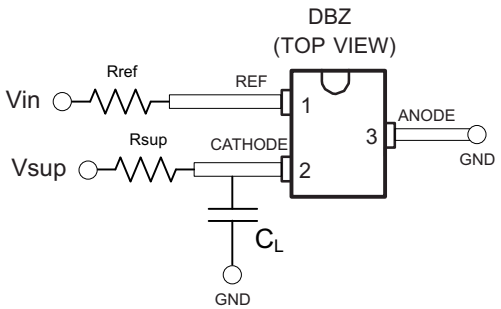

Figure 29. DBZ Layout example

Copyright © 2004–2020, Texas Instruments Incorporated

12 Device and Documentation Support

12.1 Documentation Support

12.1.1 Related Documentation

For related documentation see the following:

- , *Compensation Design With TL431 for UCC28600*SLUA671
- *Setting the Shunt Voltage on an Adjustable Shunt Regulator,*SLVA445

12.2 Receiving Notification of Documentation Updates

To receive notification of documentation updates, navigate to the device product folder on ti.com. In the upper right corner, click on *Alert me* to register and receive a weekly digest of any product information that has changed. For change details, review the revision history included in any revised document.

12.3 Community Resources

TI E2E™ support forums are an engineer's go-to source for fast, verified answers and design help — straight from the experts. Search existing answers or ask your own question to get the quick design help you need.

Linked content is provided "AS IS" by the respective contributors. They do not constitute TI specifications and do not necessarily reflect TI's views; see TI's Terms of Use.

12.4 Related Links

The table below lists quick access links. Categories include technical documents, support and community resources, tools and software, and quick access to sample or buy.

Table 3. Related Links

PARTS	PRODUCT FOLDER	SAMPLE & BUY	TECHNICAL DOCUMENTS	TOOLS & SOFTWARE	SUPPORT & COMMUNITY
TLVH431	Click here	Click here	Click here	Click here	Click here
TLVH431A	Click here	Click here	Click here	Click here	Click here
TLVH431B	Click here	Click here	Click here	Click here	Click here
TLVH432	Click here	Click here	Click here	Click here	Click here
TLVH432A	Click here	Click here	Click here	Click here	Click here
TLVH432B	Click here	Click here	Click here	Click here	Click here

12.5 Trademarks

E2E is a trademark of Texas Instruments.
All other trademarks are the property of their respective owners.

12.6 Electrostatic Discharge Caution

These devices have limited built-in ESD protection. The leads should be shorted together or the device placed in conductive foam during storage or handling to prevent electrostatic damage to the MOS gates.

12.7 Glossary

SLYZ022 — *TI Glossary*.

This glossary lists and explains terms, acronyms, and definitions.

13 Mechanical, Packaging, and Orderable Information

The following pages include mechanical packaging and orderable information. This information is the most current data available for the designated devices. This data is subject to change without notice and revision of this document. For browser based versions of this data sheet, refer to the left hand navigation.

PACKAGING INFORMATION

Orderable Device	Status (1)	Package Type	Package Drawing	Pins	Package Qty	Eco Plan (2)	Lead finish/ Ball material (6)	MSL Peak Temp (3)	Op Temp (°C)	Device Marking (4/5)	Samples
TLVH431ACDBVR	ACTIVE	SOT-23	DBV	5	3000	RoHS & Green	NIPDAU | SN	Level-1-260C-UNLIM	0 to 70	(Y3PG, Y3PJ, Y3PU)	Samples
TLVH431ACDBVRG4	ACTIVE	SOT-23	DBV	5	3000	RoHS & Green	NIPDAU	Level-1-260C-UNLIM	0 to 70	Y3PG	Samples
TLVH431ACDBVT	ACTIVE	SOT-23	DBV	5	250	RoHS & Green	NIPDAU | SN	Level-1-260C-UNLIM	0 to 70	(Y3PG, Y3PJ, Y3PU)	Samples
TLVH431ACDBZR	ACTIVE	SOT-23	DBZ	3	3000	RoHS & Green	NIPDAU | NIPDAUAG	Level-1-260C-UNLIM	0 to 70	(Y3PS, Y3PU)	Samples
TLVH431ACDBZRG4	ACTIVE	SOT-23	DBZ	3	3000	RoHS & Green	NIPDAUAG	Level-1-260C-UNLIM	0 to 70	(Y3PS, Y3PU)	Samples
TLVH431ACDBZT	ACTIVE	SOT-23	DBZ	3	250	RoHS & Green	NIPDAU | NIPDAUAG	Level-1-260C-UNLIM	0 to 70	(Y3PS, Y3PU)	Samples
TLVH431ACDCKR	ACTIVE	SC70	DCK	6	3000	RoHS & Green	NIPDAU	Level-1-260C-UNLIM	0 to 70	YPU	Samples
TLVH431ACDCKRE4	ACTIVE	SC70	DCK	6	3000	RoHS & Green	NIPDAU	Level-1-260C-UNLIM	0 to 70	YPU	Samples
TLVH431ACDCKT	ACTIVE	SC70	DCK	6	250	RoHS & Green	NIPDAU	Level-1-260C-UNLIM	0 to 70	YPU	Samples
TLVH431ACDCKTG4	ACTIVE	SC70	DCK	6	250	RoHS & Green	NIPDAU	Level-1-260C-UNLIM	0 to 70	YPU	Samples
TLVH431ACLP	ACTIVE	TO-92	LP	3	1000	RoHS & Green	SN	N / A for Pkg Type	0 to 70	ZA431A	Samples
TLVH431ACLPR	ACTIVE	TO-92	LP	3	2000	RoHS & Green	SN	N / A for Pkg Type	0 to 70	ZA431A	Samples
TLVH431ACPK	ACTIVE	SOT-89	PK	3	1000	RoHS & Green	SN	Level-2-260C-1 YEAR	0 to 70	W2	Samples
TLVH431AIDBVR	ACTIVE	SOT-23	DBV	5	3000	RoHS & Green	NIPDAU | SN	Level-1-260C-UNLIM	-40 to 85	(Y3TJ, Y3TU)	Samples
TLVH431AIDBVRE4	ACTIVE	SOT-23	DBV	5	3000	RoHS & Green	SN	Level-1-260C-UNLIM	-40 to 85	(Y3TJ, Y3TU)	Samples
TLVH431AIDBVT	ACTIVE	SOT-23	DBV	5	250	RoHS & Green	NIPDAU | SN	Level-1-260C-UNLIM	-40 to 85	(Y3TJ, Y3TU)	Samples
TLVH431AIDBVTG4	ACTIVE	SOT-23	DBV	5	250	RoHS & Green	NIPDAU	Level-1-260C-UNLIM	-40 to 85	(Y3TJ, Y3TU)	Samples
TLVH431AIDBZR	ACTIVE	SOT-23	DBZ	3	3000	RoHS & Green	NIPDAU | NIPDAUAG	Level-1-260C-UNLIM	-40 to 85	(Y3T3, Y3TS, Y3TU)	Samples
TLVH431AIDBZRG4	ACTIVE	SOT-23	DBZ	3	3000	RoHS & Green	NIPDAUAG	Level-1-260C-UNLIM	-40 to 85	(Y3T3, Y3TS, Y3TU)	Samples

Orderable Device	Status (1)	Package Type	Package Drawing	Pins	Package Qty	Eco Plan (2)	Lead finish/ Ball material (6)	MSL Peak Temp (3)	Op Temp (°C)	Device Marking (4/5)	Samples
TLVH431AIDBZT	ACTIVE	SOT-23	DBZ	3	250	RoHS & Green	NIPDAU | NIPDAUAG	Level-1-260C-UNLIM	-40 to 85	(Y3TS, Y3TU)	Samples
TLVH431AIDBZTG4	ACTIVE	SOT-23	DBZ	3	250	RoHS & Green	NIPDAUAG	Level-1-260C-UNLIM	-40 to 85	(Y3TS, Y3TU)	Samples
TLVH431AIDCKR	ACTIVE	SC70	DCK	6	3000	RoHS & Green	NIPDAU	Level-1-260C-UNLIM	-40 to 85	YTU	Samples
TLVH431AIDCKT	ACTIVE	SC70	DCK	6	250	RoHS & Green	NIPDAU	Level-1-260C-UNLIM	-40 to 85	YTU	Samples
TLVH431AILP	ACTIVE	TO-92	LP	3	1000	RoHS & Green	SN	N / A for Pkg Type	-40 to 85	ZB431A	Samples
TLVH431AILPR	ACTIVE	TO-92	LP	3	2000	RoHS & Green	SN	N / A for Pkg Type	-40 to 85	ZB431A	Samples
TLVH431AIPK	ACTIVE	SOT-89	PK	3	1000	RoHS & Green	SN	Level-2-260C-1 YEAR	-40 to 85	W3	Samples
TLVH431AIPKG3	ACTIVE	SOT-89	PK	3	1000	RoHS & Green	SN	Level-2-260C-1 YEAR	-40 to 85	W3	Samples
TLVH431AQDBVR	ACTIVE	SOT-23	DBV	5	3000	RoHS & Green	NIPDAU | SN	Level-1-260C-UNLIM	-40 to 125	(Y3NJ, Y3NU)	Samples
TLVH431AQDBVT	ACTIVE	SOT-23	DBV	5	250	RoHS & Green	NIPDAU | SN	Level-1-260C-UNLIM	-40 to 125	(Y3NJ, Y3NU)	Samples
TLVH431AQDBZR	ACTIVE	SOT-23	DBZ	3	3000	RoHS & Green	NIPDAU | NIPDAUAG	Level-1-260C-UNLIM	-40 to 125	(Y3NS, Y3NU)	Samples
TLVH431AQDBZRG4	ACTIVE	SOT-23	DBZ	3	3000	RoHS & Green	NIPDAUAG	Level-1-260C-UNLIM	-40 to 125	(Y3NS, Y3NU)	Samples
TLVH431AQDBZT	ACTIVE	SOT-23	DBZ	3	250	RoHS & Green	NIPDAU | NIPDAUAG	Level-1-260C-UNLIM	-40 to 125	(Y3NS, Y3NU)	Samples
TLVH431AQDBZTG4	ACTIVE	SOT-23	DBZ	3	250	RoHS & Green	NIPDAUAG	Level-1-260C-UNLIM	-40 to 125	(Y3NS, Y3NU)	Samples
TLVH431AQDCKR	ACTIVE	SC70	DCK	6	3000	RoHS & Green	NIPDAU	Level-1-260C-UNLIM	-40 to 125	YNU	Samples
TLVH431AQDCKT	ACTIVE	SC70	DCK	6	250	RoHS & Green	NIPDAU	Level-1-260C-UNLIM	-40 to 125	YNU	Samples
TLVH431AQLP	ACTIVE	TO-92	LP	3	1000	RoHS & Green	SN	N / A for Pkg Type	-40 to 125	ZD431A	Samples
TLVH431AQLPR	ACTIVE	TO-92	LP	3	2000	RoHS & Green	SN	N / A for Pkg Type	-40 to 125	ZD431A	Samples
TLVH431AQPK	ACTIVE	SOT-89	PK	3	1000	RoHS & Green	SN	Level-2-260C-1 YEAR	-40 to 125	VD	Samples
TLVH431AQPKG3	ACTIVE	SOT-89	PK	3	1000	RoHS & Green	SN	Level-2-260C-1 YEAR	-40 to 125	VD	Samples
TLVH431BCDBVR	ACTIVE	SOT-23	DBV	5	3000	RoHS & Green	NIPDAU | SN	Level-1-260C-UNLIM	0 to 70	(Y3JJ, Y3JU)	Samples

Orderable Device	Status (1)	Package Type	Package Drawing	Pins	Package Qty	Eco Plan (2)	Lead finish/ Ball material (6)	MSL Peak Temp (3)	Op Temp (°C)	Device Marking (4/5)	Samples
TLVH431BCDBVRG4	ACTIVE	SOT-23	DBV	5	3000	RoHS & Green	NIPDAU	Level-1-260C-UNLIM	0 to 70	(Y3JJ, Y3JU)	Samples
TLVH431BCDBVT	ACTIVE	SOT-23	DBV	5	250	RoHS & Green	NIPDAU | SN	Level-1-260C-UNLIM	0 to 70	(Y3JJ, Y3JU)	Samples
TLVH431BCDBVTE4	ACTIVE	SOT-23	DBV	5	250	RoHS & Green	SN	Level-1-260C-UNLIM	0 to 70	(Y3JJ, Y3JU)	Samples
TLVH431BCDBVTG4	ACTIVE	SOT-23	DBV	5	250	RoHS & Green	NIPDAU	Level-1-260C-UNLIM	0 to 70	(Y3JJ, Y3JU)	Samples
TLVH431BCDBZR	ACTIVE	SOT-23	DBZ	3	3000	RoHS & Green	NIPDAU | NIPDAUAG	Level-1-260C-UNLIM	0 to 70	(Y3J3, Y3JS, Y3JU)	Samples
TLVH431BCDBZRG4	ACTIVE	SOT-23	DBZ	3	3000	RoHS & Green	NIPDAUAG	Level-1-260C-UNLIM	0 to 70	(Y3J3, Y3JS, Y3JU)	Samples
TLVH431BCDBZT	ACTIVE	SOT-23	DBZ	3	250	RoHS & Green	NIPDAU | NIPDAUAG	Level-1-260C-UNLIM	0 to 70	(Y3JS, Y3JU)	Samples
TLVH431BCDBZTG4	ACTIVE	SOT-23	DBZ	3	250	RoHS & Green	NIPDAUAG	Level-1-260C-UNLIM	0 to 70	Y3JS	Samples
TLVH431BCDCKR	ACTIVE	SC70	DCK	6	3000	RoHS & Green	NIPDAU	Level-1-260C-UNLIM	0 to 70	YHU	Samples
TLVH431BCDCKT	ACTIVE	SC70	DCK	6	250	RoHS & Green	NIPDAU	Level-1-260C-UNLIM	0 to 70	YHU	Samples
TLVH431BCDCKTG4	ACTIVE	SC70	DCK	6	250	RoHS & Green	NIPDAU	Level-1-260C-UNLIM	0 to 70	YHU	Samples
TLVH431BCLP	ACTIVE	TO-92	LP	3	1000	RoHS & Green	SN	N / A for Pkg Type	0 to 70	ZA431B	Samples
TLVH431BCLPR	ACTIVE	TO-92	LP	3	2000	RoHS & Green	SN	N / A for Pkg Type	0 to 70	ZA431B	Samples
TLVH431BCPK	ACTIVE	SOT-89	PK	3	1000	RoHS & Green	SN	Level-2-260C-1 YEAR	0 to 70	V7	Samples
TLVH431BIDBVR	ACTIVE	SOT-23	DBV	5	3000	RoHS & Green	NIPDAU | SN	Level-1-260C-UNLIM	-40 to 85	(Y3KJ, Y3KU)	Samples
TLVH431BIDBVT	ACTIVE	SOT-23	DBV	5	250	RoHS & Green	NIPDAU | SN	Level-1-260C-UNLIM	-40 to 85	(Y3KJ, Y3KU)	Samples
TLVH431BIDBZR	ACTIVE	SOT-23	DBZ	3	3000	RoHS & Green	NIPDAU | NIPDAUAG	Level-1-260C-UNLIM	-40 to 85	(Y3K3, Y3KS, Y3KU)	Samples
TLVH431BIDBZRG4	ACTIVE	SOT-23	DBZ	3	3000	RoHS & Green	NIPDAUAG	Level-1-260C-UNLIM	-40 to 85	(Y3K3, Y3KS, Y3KU)	Samples
TLVH431BIDBZT	ACTIVE	SOT-23	DBZ	3	250	RoHS & Green	NIPDAU | NIPDAUAG	Level-1-260C-UNLIM	-40 to 85	(Y3KS, Y3KU)	Samples
TLVH431BIDBZTG4	ACTIVE	SOT-23	DBZ	3	250	RoHS & Green	NIPDAUAG	Level-1-260C-UNLIM	-40 to 85	(Y3KS, Y3KU)	Samples

Orderable Device	Status (1)	Package Type	Package Drawing	Pins	Package Qty	Eco Plan (2)	Lead finish/ Ball material (6)	MSL Peak Temp (3)	Op Temp (°C)	Device Marking (4/5)	Samples
TLVH431BIDCKR	ACTIVE	SC70	DCK	6	3000	RoHS & Green	NIPDAU	Level-1-260C-UNLIM	-40 to 85	YJU	Samples
TLVH431BIDCKRE4	ACTIVE	SC70	DCK	6	3000	RoHS & Green	NIPDAU	Level-1-260C-UNLIM	-40 to 85	YJU	Samples
TLVH431BIDCKRG4	ACTIVE	SC70	DCK	6	3000	RoHS & Green	NIPDAU	Level-1-260C-UNLIM	-40 to 85	YJU	Samples
TLVH431BIDCKT	ACTIVE	SC70	DCK	6	250	RoHS & Green	NIPDAU	Level-1-260C-UNLIM	-40 to 85	YJU	Samples
TLVH431BIDCKTG4	ACTIVE	SC70	DCK	6	250	RoHS & Green	NIPDAU	Level-1-260C-UNLIM	-40 to 85	YJU	Samples
TLVH431BILP	ACTIVE	TO-92	LP	3	1000	RoHS & Green	SN	N / A for Pkg Type	-40 to 85	ZB431B	Samples
TLVH431BILPR	ACTIVE	TO-92	LP	3	2000	RoHS & Green	SN	N / A for Pkg Type	-40 to 85	ZB431B	Samples
TLVH431BIPK	ACTIVE	SOT-89	PK	3	1000	RoHS & Green	SN	Level-2-260C-1 YEAR	-40 to 85	V8	Samples
TLVH431BIPKG3	ACTIVE	SOT-89	PK	3	1000	RoHS & Green	SN	Level-2-260C-1 YEAR	-40 to 85	V8	Samples
TLVH431BQDBVR	ACTIVE	SOT-23	DBV	5	3000	RoHS & Green	NIPDAU | SN	Level-1-260C-UNLIM	-40 to 125	(Y3LJ, Y3LU)	Samples
TLVH431BQDBVRE4	ACTIVE	SOT-23	DBV	5	3000	RoHS & Green	SN	Level-1-260C-UNLIM	-40 to 125	(Y3LJ, Y3LU)	Samples
TLVH431BQDBVT	ACTIVE	SOT-23	DBV	5	250	RoHS & Green	NIPDAU | SN	Level-1-260C-UNLIM	-40 to 125	(Y3LJ, Y3LU)	Samples
TLVH431BQDBZR	ACTIVE	SOT-23	DBZ	3	3000	RoHS & Green	NIPDAU | NIPDAUAG	Level-1-260C-UNLIM	-40 to 125	(Y3LS, Y3LU)	Samples
TLVH431BQDBZRG4	ACTIVE	SOT-23	DBZ	3	3000	RoHS & Green	NIPDAUAG	Level-1-260C-UNLIM	-40 to 125	(Y3LS, Y3LU)	Samples
TLVH431BQDBZT	ACTIVE	SOT-23	DBZ	3	250	RoHS & Green	NIPDAU | NIPDAUAG	Level-1-260C-UNLIM	-40 to 125	(Y3LS, Y3LU)	Samples
TLVH431BQDBZTG4	ACTIVE	SOT-23	DBZ	3	250	RoHS & Green	NIPDAUAG	Level-1-260C-UNLIM	-40 to 125	(Y3LS, Y3LU)	Samples
TLVH431BQDCKR	ACTIVE	SC70	DCK	6	3000	RoHS & Green	NIPDAU	Level-1-260C-UNLIM	-40 to 125	YKU	Samples
TLVH431BQDCKT	ACTIVE	SC70	DCK	6	250	RoHS & Green	NIPDAU	Level-1-260C-UNLIM	-40 to 125	YKU	Samples
TLVH431BQLP	ACTIVE	TO-92	LP	3	1000	RoHS & Green	SN	N / A for Pkg Type	-40 to 125	ZD431B	Samples
TLVH431BQLPE3	ACTIVE	TO-92	LP	3	1000	RoHS & Green	SN	N / A for Pkg Type	-40 to 125	ZD431B	Samples
TLVH431BQLPR	ACTIVE	TO-92	LP	3	2000	RoHS & Green	SN	N / A for Pkg Type	-40 to 125	ZD431B	Samples

Orderable Device	Status (1)	Package Type	Package Drawing	Pins	Package Qty	Eco Plan (2)	Lead finish/ Ball material (6)	MSL Peak Temp (3)	Op Temp (°C)	Device Marking (4/5)	Samples
TLVH431BQPK	ACTIVE	SOT-89	PK	3	1000	RoHS & Green	SN	Level-2-260C-1 YEAR	-40 to 125	V9	Samples
TLVH431CDBVR	ACTIVE	SOT-23	DBV	5	3000	RoHS & Green	NIPDAU | SN	Level-1-260C-UNLIM	0 to 70	(Y3UJ, Y3UU)	Samples
TLVH431CDBVT	ACTIVE	SOT-23	DBV	5	250	RoHS & Green	NIPDAU | SN	Level-1-260C-UNLIM	0 to 70	(Y3UJ, Y3UU)	Samples
TLVH431CDBZR	ACTIVE	SOT-23	DBZ	3	3000	RoHS & Green	NIPDAU | NIPDAUAG	Level-1-260C-UNLIM	0 to 70	(Y3US, Y3UU)	Samples
TLVH431CDBZRG4	ACTIVE	SOT-23	DBZ	3	3000	RoHS & Green	NIPDAUAG	Level-1-260C-UNLIM	0 to 70	(Y3US, Y3UU)	Samples
TLVH431CDBZT	ACTIVE	SOT-23	DBZ	3	250	RoHS & Green	NIPDAU | NIPDAUAG	Level-1-260C-UNLIM	0 to 70	(Y3US, Y3UU)	Samples
TLVH431CDBZTG4	ACTIVE	SOT-23	DBZ	3	250	RoHS & Green	NIPDAUAG	Level-1-260C-UNLIM	0 to 70	Y3US	Samples
TLVH431CDCKT	ACTIVE	SC70	DCK	6	250	RoHS & Green	NIPDAU	Level-1-260C-UNLIM	0 to 70	YUU	Samples
TLVH431CDCKTE4	ACTIVE	SC70	DCK	6	250	RoHS & Green	NIPDAU	Level-1-260C-UNLIM	0 to 70	YUU	Samples
TLVH431CLP	ACTIVE	TO-92	LP	3	1000	RoHS & Green	SN	N / A for Pkg Type	0 to 70	ZA431	Samples
TLVH431CLPE3	ACTIVE	TO-92	LP	3	1000	RoHS & Green	SN	N / A for Pkg Type	0 to 70	ZA431	Samples
TLVH431CLPR	ACTIVE	TO-92	LP	3	2000	RoHS & Green	SN	N / A for Pkg Type	0 to 70	ZA431	Samples
TLVH431CPK	ACTIVE	SOT-89	PK	3	1000	RoHS & Green	SN	Level-2-260C-1 YEAR	0 to 70	W4	Samples
TLVH431CPKG3	ACTIVE	SOT-89	PK	3	1000	RoHS & Green	SN	Level-2-260C-1 YEAR	0 to 70	W4	Samples
TLVH431IDBVR	ACTIVE	SOT-23	DBV	5	3000	RoHS & Green	NIPDAU | SN	Level-1-260C-UNLIM	-40 to 85	(Y3VJ, Y3VU)	Samples
TLVH431IDBVT	ACTIVE	SOT-23	DBV	5	250	RoHS & Green	NIPDAU | SN	Level-1-260C-UNLIM	-40 to 85	(Y3VJ, Y3VU)	Samples
TLVH431IDBVTG4	ACTIVE	SOT-23	DBV	5	250	RoHS & Green	NIPDAU	Level-1-260C-UNLIM	-40 to 85	(Y3VJ, Y3VU)	Samples
TLVH431IDBZR	ACTIVE	SOT-23	DBZ	3	3000	RoHS & Green	NIPDAU | NIPDAUAG	Level-1-260C-UNLIM	-40 to 85	(Y3VS, Y3VU)	Samples
TLVH431IDBZRG4	ACTIVE	SOT-23	DBZ	3	3000	RoHS & Green	NIPDAUAG	Level-1-260C-UNLIM	-40 to 85	(Y3VS, Y3VU)	Samples
TLVH431IDBZT	ACTIVE	SOT-23	DBZ	3	250	RoHS & Green	NIPDAU | NIPDAUAG	Level-1-260C-UNLIM	-40 to 85	(Y3VS, Y3VU)	Samples
TLVH431IDCKR	ACTIVE	SC70	DCK	6	3000	RoHS & Green	NIPDAU	Level-1-260C-UNLIM	-40 to 85	YVU	Samples

Orderable Device	Status (1)	Package Type	Package Drawing	Pins	Package Qty	Eco Plan (2)	Lead finish/ Ball material (6)	MSL Peak Temp (3)	Op Temp (°C)	Device Marking (4/5)	Samples
TLVH431IDCKT	ACTIVE	SC70	DCK	6	250	RoHS & Green	NIPDAU	Level-1-260C-UNLIM	-40 to 85	YVU	Samples
TLVH431ILP	ACTIVE	TO-92	LP	3	1000	RoHS & Green	SN	N / A for Pkg Type	-40 to 85	ZB431	Samples
TLVH431ILPR	ACTIVE	TO-92	LP	3	2000	RoHS & Green	SN	N / A for Pkg Type	-40 to 85	ZB431	Samples
TLVH431IPK	ACTIVE	SOT-89	PK	3	1000	RoHS & Green	SN	Level-2-260C-1 YEAR	-40 to 85	W5	Samples
TLVH431QDBVR	ACTIVE	SOT-23	DBV	5	3000	RoHS & Green	NIPDAU | SN	Level-1-260C-UNLIM	-40 to 125	(Y3MJ, Y3MU)	Samples
TLVH431QDBVT	ACTIVE	SOT-23	DBV	5	250	RoHS & Green	NIPDAU | SN	Level-1-260C-UNLIM	-40 to 125	(Y3MJ, Y3MU)	Samples
TLVH431QDBVTG4	ACTIVE	SOT-23	DBV	5	250	RoHS & Green	NIPDAU	Level-1-260C-UNLIM	-40 to 125	(Y3MJ, Y3MU)	Samples
TLVH431QDBZR	ACTIVE	SOT-23	DBZ	3	3000	RoHS & Green	NIPDAU | NIPDAUAG	Level-1-260C-UNLIM	-40 to 125	(Y3MS, Y3MU)	Samples
TLVH431QDBZT	ACTIVE	SOT-23	DBZ	3	250	RoHS & Green	NIPDAU | NIPDAUAG	Level-1-260C-UNLIM	-40 to 125	(Y3MS, Y3MU)	Samples
TLVH431QDBZTG4	ACTIVE	SOT-23	DBZ	3	250	RoHS & Green	NIPDAUAG	Level-1-260C-UNLIM	-40 to 125	Y3MS	Samples
TLVH431QDCKR	ACTIVE	SC70	DCK	6	3000	RoHS & Green	NIPDAU	Level-1-260C-UNLIM	-40 to 125	YMU	Samples
TLVH431QDCKT	ACTIVE	SC70	DCK	6	250	RoHS & Green	NIPDAU	Level-1-260C-UNLIM	-40 to 125	YMU	Samples
TLVH431QLP	ACTIVE	TO-92	LP	3	1000	RoHS & Green	SN	N / A for Pkg Type	-40 to 125	ZD431	Samples
TLVH431QLPR	ACTIVE	TO-92	LP	3	2000	RoHS & Green	SN	N / A for Pkg Type	-40 to 125	ZD431	Samples
TLVH431QPK	ACTIVE	SOT-89	PK	3	1000	RoHS & Green	SN	Level-2-260C-1 YEAR	-40 to 125	VC	Samples
TLVH432ACDBZR	ACTIVE	SOT-23	DBZ	3	3000	RoHS & Green	NIPDAU | NIPDAUAG	Level-1-260C-UNLIM	0 to 70	(Y2ES, Y2EU)	Samples
TLVH432ACDBZRG4	ACTIVE	SOT-23	DBZ	3	3000	RoHS & Green	NIPDAUAG	Level-1-260C-UNLIM	0 to 70	(Y2ES, Y2EU)	Samples
TLVH432ACDBZT	ACTIVE	SOT-23	DBZ	3	250	RoHS & Green	NIPDAU | NIPDAUAG	Level-1-260C-UNLIM	0 to 70	(Y2ES, Y2EU)	Samples
TLVH432AIDBZR	ACTIVE	SOT-23	DBZ	3	3000	RoHS & Green	NIPDAU | NIPDAUAG	Level-1-260C-UNLIM	-40 to 85	(Y2FS, Y2FU)	Samples
TLVH432AIPK	ACTIVE	SOT-89	PK	3	1000	RoHS & Green	SN	Level-2-260C-1 YEAR	-40 to 85	VL	Samples
TLVH432AQDBZR	ACTIVE	SOT-23	DBZ	3	3000	RoHS & Green	NIPDAU | NIPDAUAG	Level-1-260C-UNLIM	-40 to 125	(Y2GS, Y2GU)	Samples

Orderable Device	Status (1)	Package Type	Package Drawing	Pins	Package Qty	Eco Plan (2)	Lead finish/ Ball material (6)	MSL Peak Temp (3)	Op Temp (°C)	Device Marking (4/5)	Samples
TLVH432AQDBZT	ACTIVE	SOT-23	DBZ	3	250	RoHS & Green	NIPDAU | NIPDAUAG	Level-1-260C-UNLIM	-40 to 125	(Y2GS, Y2GU)	Samples
TLVH432BCDBZR	ACTIVE	SOT-23	DBZ	3	3000	RoHS & Green	NIPDAU | NIPDAUAG	Level-1-260C-UNLIM	0 to 70	(Y2HS, Y2HU)	Samples
TLVH432BCDBZRG4	ACTIVE	SOT-23	DBZ	3	3000	RoHS & Green	NIPDAUAG	Level-1-260C-UNLIM	0 to 70	(Y2HS, Y2HU)	Samples
TLVH432BCPK	ACTIVE	SOT-89	PK	3	1000	RoHS & Green	SN	Level-2-260C-1 YEAR	0 to 70	VN	Samples
TLVH432BIDBZR	ACTIVE	SOT-23	DBZ	3	3000	RoHS & Green	NIPDAU | NIPDAUAG	Level-1-260C-UNLIM	-40 to 85	(Y2JS, Y2JU)	Samples
TLVH432BQDBZR	ACTIVE	SOT-23	DBZ	3	3000	RoHS & Green	NIPDAU | NIPDAUAG	Level-1-260C-UNLIM	-40 to 125	(Y2KS, Y2KU)	Samples
TLVH432BQDBZT	ACTIVE	SOT-23	DBZ	3	250	RoHS & Green	NIPDAU | NIPDAUAG	Level-1-260C-UNLIM	-40 to 125	(Y2KS, Y2KU)	Samples
TLVH432BQDBZTG4	ACTIVE	SOT-23	DBZ	3	250	RoHS & Green	NIPDAUAG	Level-1-260C-UNLIM	-40 to 125	(Y2KS, Y2KU)	Samples
TLVH432CDBZR	ACTIVE	SOT-23	DBZ	3	3000	RoHS & Green	NIPDAU | NIPDAUAG	Level-1-260C-UNLIM	0 to 70	(Y2AS, Y2AU)	Samples
TLVH432CDBZT	ACTIVE	SOT-23	DBZ	3	250	RoHS & Green	NIPDAU | NIPDAUAG	Level-1-260C-UNLIM	0 to 70	(Y2AS, Y2AU)	Samples
TLVH432CPK	ACTIVE	SOT-89	PK	3	1000	RoHS & Green	SN	Level-2-260C-1 YEAR	0 to 70	VG	Samples
TLVH432IDBZR	ACTIVE	SOT-23	DBZ	3	3000	RoHS & Green	NIPDAU | NIPDAUAG	Level-1-260C-UNLIM	-40 to 85	(Y2BS, Y2BU)	Samples
TLVH432QDBZR	ACTIVE	SOT-23	DBZ	3	3000	RoHS & Green	NIPDAU | NIPDAUAG	Level-1-260C-UNLIM	-40 to 125	(Y2DS, Y2DU)	Samples
TLVH432QDBZT	ACTIVE	SOT-23	DBZ	3	250	RoHS & Green	NIPDAU | NIPDAUAG	Level-1-260C-UNLIM	-40 to 125	(Y2DS, Y2DU)	Samples
TLVH432QPK	ACTIVE	SOT-89	PK	3	1000	RoHS & Green	SN	Level-2-260C-1 YEAR	-40 to 125	VJ	Samples
TLVH432QPKG3	ACTIVE	SOT-89	PK	3	1000	RoHS & Green	SN	Level-2-260C-1 YEAR	-40 to 125	VJ	Samples

(1) The marketing status values are defined as follows:
ACTIVE: Product device recommended for new designs.
LIFEBUY: TI has announced that the device will be discontinued, and a lifetime-buy period is in effect.
NRND: Not recommended for new designs. Device is in production to support existing customers, but TI does not recommend using this part in a new design.
PREVIEW: Device has been announced but is not in production. Samples may or may not be available.
OBSOLETE: TI has discontinued the production of the device.

(2) **RoHS:** TI defines "RoHS" to mean semiconductor products that are compliant with the current EU RoHS requirements for all 10 RoHS substances, including the requirement that RoHS substance do not exceed 0.1% by weight in homogeneous materials. Where designed to be soldered at high temperatures, "RoHS" products are suitable for use in specified lead-free processes. TI may reference these types of products as "Pb-Free".
RoHS Exempt: TI defines "RoHS Exempt" to mean products that contain lead but are compliant with EU RoHS pursuant to a specific EU RoHS exemption.
Green: TI defines "Green" to mean the content of Chlorine (Cl) and Bromine (Br) based flame retardants meet JS709B low halogen requirements of <=1000ppm threshold. Antimony trioxide based flame retardants must also meet the <=1000ppm threshold requirement.

(3) MSL, Peak Temp. - The Moisture Sensitivity Level rating according to the JEDEC industry standard classifications, and peak solder temperature.

(4) There may be additional marking, which relates to the logo, the lot trace code information, or the environmental category on the device.

(5) Multiple Device Markings will be inside parentheses. Only one Device Marking contained in parentheses and separated by a "~" will appear on a device. If a line is indented then it is a continuation of the previous line and the two combined represent the entire Device Marking for that device.

(6) Lead finish/Ball material - Orderable Devices may have multiple material finish options. Finish options are separated by a vertical ruled line. Lead finish/Ball material values may wrap to two lines if the finish value exceeds the maximum column width.

Important Information and Disclaimer: The information provided on this page represents TI's knowledge and belief as of the date that it is provided. TI bases its knowledge and belief on information provided by third parties, and makes no representation or warranty as to the accuracy of such information. Efforts are underway to better integrate information from third parties. TI has taken and continues to take reasonable steps to provide representative and accurate information but may not have conducted destructive testing or chemical analysis on incoming materials and chemicals. TI and TI suppliers consider certain information to be proprietary, and thus CAS numbers and other limited information may not be available for release.

In no event shall TI's liability arising out of such information exceed the total purchase price of the TI part(s) at issue in this document sold by TI to Customer on an annual basis.

OTHER QUALIFIED VERSIONS OF TLVH431A, TLVH431B :

- Automotive : TLVH431A-Q1, TLVH431B-Q1
- Enhanced Product : TLVH431B-EP

NOTE: Qualified Version Definitions:

- Automotive - Q100 devices qualified for high-reliability automotive applications targeting zero defects
- Enhanced Product - Supports Defense, Aerospace and Medical Applications

TAPE AND REEL INFORMATION

REEL DIMENSIONS

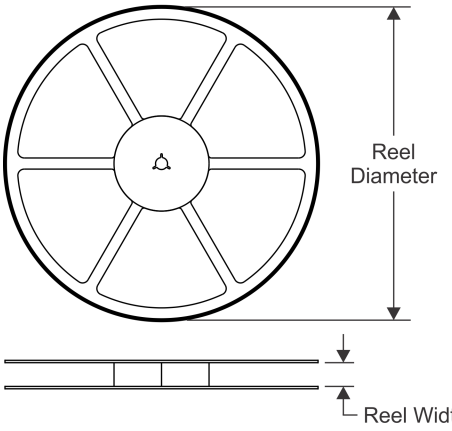

TAPE DIMENSIONS

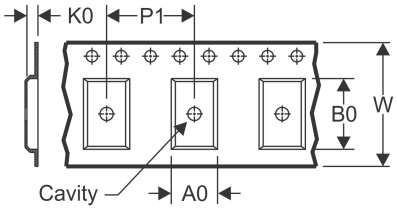

A0	Dimension designed to accommodate the component width
B0	Dimension designed to accommodate the component length
K0	Dimension designed to accommodate the component thickness
W	Overall width of the carrier tape
P1	Pitch between successive cavity centers

QUADRANT ASSIGNMENTS FOR PIN 1 ORIENTATION IN TAPE

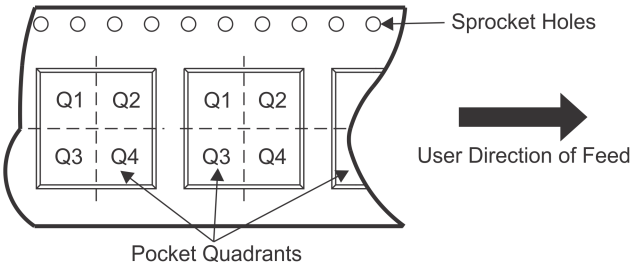

*All dimensions are nominal

Device	Package Type	Package Drawing	Pins	SPQ	Reel Diameter (mm)	Reel Width W1 (mm)	A0 (mm)	B0 (mm)	K0 (mm)	P1 (mm)	W (mm)	Pin1 Quadrant
TLVH431ACDBVR	SOT-23	DBV	5	3000	178.0	9.0	3.23	3.17	1.37	4.0	8.0	Q3
TLVH431ACDBVR	SOT-23	DBV	5	3000	178.0	9.0	3.3	3.2	1.4	4.0	8.0	Q3
TLVH431ACDBVRG4	SOT-23	DBV	5	3000	178.0	9.0	3.23	3.17	1.37	4.0	8.0	Q3
TLVH431ACDBVT	SOT-23	DBV	5	250	178.0	9.0	3.23	3.17	1.37	4.0	8.0	Q3
TLVH431ACDBVT	SOT-23	DBV	5	250	178.0	9.0	3.3	3.2	1.4	4.0	8.0	Q3
TLVH431ACDBZR	SOT-23	DBZ	3	3000	180.0	8.4	3.15	2.77	1.22	4.0	8.0	Q3
TLVH431ACDBZT	SOT-23	DBZ	3	250	180.0	8.4	3.15	2.77	1.22	4.0	8.0	Q3
TLVH431ACDCKR	SC70	DCK	6	3000	179.0	8.4	2.2	2.5	1.2	4.0	8.0	Q3
TLVH431ACDCKT	SC70	DCK	6	250	179.0	8.4	2.2	2.5	1.2	4.0	8.0	Q3
TLVH431ACPK	SOT-89	PK	3	1000	180.0	12.4	4.91	4.52	1.9	8.0	12.0	Q3
TLVH431AIDBVR	SOT-23	DBV	5	3000	178.0	9.0	3.3	3.2	1.4	4.0	8.0	Q3
TLVH431AIDBVR	SOT-23	DBV	5	3000	180.0	8.4	3.2	3.2	1.4	4.0	8.0	Q3
TLVH431AIDBVT	SOT-23	DBV	5	250	180.0	8.4	3.2	3.2	1.4	4.0	8.0	Q3
TLVH431AIDBVT	SOT-23	DBV	5	250	178.0	9.0	3.3	3.2	1.4	4.0	8.0	Q3
TLVH431AIDBZR	SOT-23	DBZ	3	3000	179.0	8.4	3.15	2.95	1.22	4.0	8.0	Q3
TLVH431AIDBZR	SOT-23	DBZ	3	3000	180.0	8.4	3.15	2.77	1.22	4.0	8.0	Q3
TLVH431AIDBZR	SOT-23	DBZ	3	3000	178.0	9.2	3.15	2.77	1.22	4.0	8.0	Q3
TLVH431AIDBZT	SOT-23	DBZ	3	250	180.0	8.4	3.15	2.77	1.22	4.0	8.0	Q3

Device	Package Type	Package Drawing	Pins	SPQ	Reel Diameter (mm)	Reel Width W1 (mm)	A0 (mm)	B0 (mm)	K0 (mm)	P1 (mm)	W (mm)	Pin1 Quadrant
TLVH431AIDCKR	SC70	DCK	6	3000	179.0	8.4	2.2	2.5	1.2	4.0	8.0	Q3
TLVH431AIDCKT	SC70	DCK	6	250	179.0	8.4	2.2	2.5	1.2	4.0	8.0	Q3
TLVH431AIPK	SOT-89	PK	3	1000	180.0	12.4	4.91	4.52	1.9	8.0	12.0	Q3
TLVH431AQDBVR	SOT-23	DBV	5	3000	178.0	9.0	3.3	3.2	1.4	4.0	8.0	Q3
TLVH431AQDBVR	SOT-23	DBV	5	3000	180.0	8.4	3.2	3.2	1.4	4.0	8.0	Q3
TLVH431AQDBVT	SOT-23	DBV	5	250	178.0	9.0	3.3	3.2	1.4	4.0	8.0	Q3
TLVH431AQDBVT	SOT-23	DBV	5	250	180.0	8.4	3.2	3.2	1.4	4.0	8.0	Q3
TLVH431AQDBZR	SOT-23	DBZ	3	3000	180.0	8.4	3.15	2.77	1.22	4.0	8.0	Q3
TLVH431AQDBZT	SOT-23	DBZ	3	250	180.0	8.4	3.15	2.77	1.22	4.0	8.0	Q3
TLVH431AQDCKR	SC70	DCK	6	3000	179.0	8.4	2.2	2.5	1.2	4.0	8.0	Q3
TLVH431AQDCKT	SC70	DCK	6	250	179.0	8.4	2.2	2.5	1.2	4.0	8.0	Q3
TLVH431AQPK	SOT-89	PK	3	1000	180.0	12.4	4.91	4.52	1.9	8.0	12.0	Q3
TLVH431BCDBVR	SOT-23	DBV	5	3000	180.0	8.4	3.2	3.2	1.4	4.0	8.0	Q3
TLVH431BCDBVR	SOT-23	DBV	5	3000	178.0	9.0	3.3	3.2	1.4	4.0	8.0	Q3
TLVH431BCDBVT	SOT-23	DBV	5	250	178.0	9.0	3.3	3.2	1.4	4.0	8.0	Q3
TLVH431BCDBVT	SOT-23	DBV	5	250	180.0	8.4	3.2	3.2	1.4	4.0	8.0	Q3
TLVH431BCDBZR	SOT-23	DBZ	3	3000	179.0	8.4	3.15	2.95	1.22	4.0	8.0	Q3
TLVH431BCDBZR	SOT-23	DBZ	3	3000	180.0	8.4	3.15	2.77	1.22	4.0	8.0	Q3
TLVH431BCDBZT	SOT-23	DBZ	3	250	180.0	8.4	3.15	2.77	1.22	4.0	8.0	Q3
TLVH431BCDBZTG4	SOT-23	DBZ	3	250	180.0	8.4	3.15	2.77	1.22	4.0	8.0	Q3
TLVH431BCDCKR	SC70	DCK	6	3000	179.0	8.4	2.2	2.5	1.2	4.0	8.0	Q3
TLVH431BCDCKT	SC70	DCK	6	250	179.0	8.4	2.2	2.5	1.2	4.0	8.0	Q3
TLVH431BCPK	SOT-89	PK	3	1000	180.0	12.4	4.91	4.52	1.9	8.0	12.0	Q3
TLVH431BIDBVR	SOT-23	DBV	5	3000	178.0	9.0	3.3	3.2	1.4	4.0	8.0	Q3
TLVH431BIDBVR	SOT-23	DBV	5	3000	180.0	8.4	3.2	3.2	1.4	4.0	8.0	Q3
TLVH431BIDBVT	SOT-23	DBV	5	250	178.0	9.0	3.3	3.2	1.4	4.0	8.0	Q3
TLVH431BIDBVT	SOT-23	DBV	5	250	180.0	8.4	3.2	3.2	1.4	4.0	8.0	Q3
TLVH431BIDBZR	SOT-23	DBZ	3	3000	179.0	8.4	3.15	2.95	1.22	4.0	8.0	Q3
TLVH431BIDBZR	SOT-23	DBZ	3	3000	178.0	9.2	3.15	2.77	1.22	4.0	8.0	Q3
TLVH431BIDBZR	SOT-23	DBZ	3	3000	180.0	8.4	3.15	2.77	1.22	4.0	8.0	Q3
TLVH431BIDBZT	SOT-23	DBZ	3	250	180.0	8.4	3.15	2.77	1.22	4.0	8.0	Q3
TLVH431BIDCKR	SC70	DCK	6	3000	179.0	8.4	2.2	2.5	1.2	4.0	8.0	Q3
TLVH431BIDCKT	SC70	DCK	6	250	179.0	8.4	2.2	2.5	1.2	4.0	8.0	Q3
TLVH431BIPK	SOT-89	PK	3	1000	180.0	12.4	4.91	4.52	1.9	8.0	12.0	Q3
TLVH431BQDBVR	SOT-23	DBV	5	3000	178.0	9.0	3.3	3.2	1.4	4.0	8.0	Q3
TLVH431BQDBVR	SOT-23	DBV	5	3000	179.0	8.4	3.2	3.2	1.4	4.0	8.0	Q3
TLVH431BQDBVT	SOT-23	DBV	5	250	178.0	9.0	3.3	3.2	1.4	4.0	8.0	Q3
TLVH431BQDBVT	SOT-23	DBV	5	250	179.0	8.4	3.2	3.2	1.4	4.0	8.0	Q3
TLVH431BQDBZR	SOT-23	DBZ	3	3000	180.0	8.4	3.15	2.77	1.22	4.0	8.0	Q3
TLVH431BQDBZT	SOT-23	DBZ	3	250	180.0	8.4	3.15	2.77	1.22	4.0	8.0	Q3
TLVH431BQDCKR	SC70	DCK	6	3000	179.0	8.4	2.2	2.5	1.2	4.0	8.0	Q3
TLVH431BQDCKT	SC70	DCK	6	250	179.0	8.4	2.2	2.5	1.2	4.0	8.0	Q3
TLVH431BQPK	SOT-89	PK	3	1000	180.0	12.4	4.91	4.52	1.9	8.0	12.0	Q3

Device	Package Type	Package Drawing	Pins	SPQ	Reel Diameter (mm)	Reel Width W1 (mm)	A0 (mm)	B0 (mm)	K0 (mm)	P1 (mm)	W (mm)	Pin1 Quadrant
TLVH431CDBVR	SOT-23	DBV	5	3000	178.0	9.0	3.3	3.2	1.4	4.0	8.0	Q3
TLVH431CDBVR	SOT-23	DBV	5	3000	180.0	8.4	3.2	3.2	1.4	4.0	8.0	Q3
TLVH431CDBVT	SOT-23	DBV	5	250	178.0	9.0	3.3	3.2	1.4	4.0	8.0	Q3
TLVH431CDBVT	SOT-23	DBV	5	250	179.0	8.4	3.2	3.2	1.4	4.0	8.0	Q3
TLVH431CDBZR	SOT-23	DBZ	3	3000	180.0	8.4	3.15	2.77	1.22	4.0	8.0	Q3
TLVH431CDBZT	SOT-23	DBZ	3	250	180.0	8.4	3.15	2.77	1.22	4.0	8.0	Q3
TLVH431CDBZTG4	SOT-23	DBZ	3	250	180.0	8.4	3.15	2.77	1.22	4.0	8.0	Q3
TLVH431CDCKT	SC70	DCK	6	250	179.0	8.4	2.2	2.5	1.2	4.0	8.0	Q3
TLVH431CPK	SOT-89	PK	3	1000	180.0	12.4	4.91	4.52	1.9	8.0	12.0	Q3
TLVH431IDBVR	SOT-23	DBV	5	3000	180.0	8.4	3.2	3.2	1.4	4.0	8.0	Q3
TLVH431IDBVR	SOT-23	DBV	5	3000	178.0	9.0	3.3	3.2	1.4	4.0	8.0	Q3
TLVH431IDBVT	SOT-23	DBV	5	250	178.0	9.0	3.3	3.2	1.4	4.0	8.0	Q3
TLVH431IDBVT	SOT-23	DBV	5	250	180.0	8.4	3.2	3.2	1.4	4.0	8.0	Q3
TLVH431IDBZR	SOT-23	DBZ	3	3000	180.0	8.4	3.15	2.77	1.22	4.0	8.0	Q3
TLVH431IDBZT	SOT-23	DBZ	3	250	180.0	8.4	3.15	2.77	1.22	4.0	8.0	Q3
TLVH431IDCKR	SC70	DCK	6	3000	179.0	8.4	2.2	2.5	1.2	4.0	8.0	Q3
TLVH431IDCKT	SC70	DCK	6	250	179.0	8.4	2.2	2.5	1.2	4.0	8.0	Q3
TLVH431IPK	SOT-89	PK	3	1000	180.0	12.4	4.91	4.52	1.9	8.0	12.0	Q3
TLVH431QDBVR	SOT-23	DBV	5	3000	178.0	9.0	3.3	3.2	1.4	4.0	8.0	Q3
TLVH431QDBVR	SOT-23	DBV	5	3000	180.0	8.4	3.2	3.2	1.4	4.0	8.0	Q3
TLVH431QDBVT	SOT-23	DBV	5	250	180.0	8.4	3.2	3.2	1.4	4.0	8.0	Q3
TLVH431QDBVT	SOT-23	DBV	5	250	178.0	9.0	3.3	3.2	1.4	4.0	8.0	Q3
TLVH431QDBZR	SOT-23	DBZ	3	3000	180.0	8.4	3.15	2.77	1.22	4.0	8.0	Q3
TLVH431QDBZT	SOT-23	DBZ	3	250	180.0	8.4	3.15	2.77	1.22	4.0	8.0	Q3
TLVH431QDBZTG4	SOT-23	DBZ	3	250	180.0	8.4	3.15	2.77	1.22	4.0	8.0	Q3
TLVH431QDCKR	SC70	DCK	6	3000	179.0	8.4	2.2	2.5	1.2	4.0	8.0	Q3
TLVH431QDCKT	SC70	DCK	6	250	179.0	8.4	2.2	2.5	1.2	4.0	8.0	Q3
TLVH431QPK	SOT-89	PK	3	1000	180.0	12.4	4.91	4.52	1.9	8.0	12.0	Q3
TLVH432ACDBZR	SOT-23	DBZ	3	3000	180.0	8.4	3.15	2.77	1.22	4.0	8.0	Q3
TLVH432ACDBZT	SOT-23	DBZ	3	250	180.0	8.4	3.15	2.77	1.22	4.0	8.0	Q3
TLVH432AIDBZR	SOT-23	DBZ	3	3000	180.0	8.4	3.15	2.77	1.22	4.0	8.0	Q3
TLVH432AIPK	SOT-89	PK	3	1000	180.0	12.4	4.91	4.52	1.9	8.0	12.0	Q3
TLVH432AQDBZR	SOT-23	DBZ	3	3000	180.0	8.4	3.15	2.77	1.22	4.0	8.0	Q3
TLVH432AQDBZT	SOT-23	DBZ	3	250	180.0	8.4	3.15	2.77	1.22	4.0	8.0	Q3
TLVH432BCDBZR	SOT-23	DBZ	3	3000	180.0	8.4	3.15	2.77	1.22	4.0	8.0	Q3
TLVH432BCPK	SOT-89	PK	3	1000	180.0	12.4	4.91	4.52	1.9	8.0	12.0	Q3
TLVH432BIDBZR	SOT-23	DBZ	3	3000	180.0	8.4	3.15	2.77	1.22	4.0	8.0	Q3
TLVH432BQDBZR	SOT-23	DBZ	3	3000	180.0	8.4	3.15	2.77	1.22	4.0	8.0	Q3
TLVH432BQDBZT	SOT-23	DBZ	3	250	180.0	8.4	3.15	2.77	1.22	4.0	8.0	Q3
TLVH432CDBZR	SOT-23	DBZ	3	3000	180.0	8.4	3.15	2.77	1.22	4.0	8.0	Q3
TLVH432CDBZT	SOT-23	DBZ	3	250	180.0	8.4	3.15	2.77	1.22	4.0	8.0	Q3
TLVH432CPK	SOT-89	PK	3	1000	180.0	12.4	4.91	4.52	1.9	8.0	12.0	Q3
TLVH432IDBZR	SOT-23	DBZ	3	3000	180.0	8.4	3.15	2.77	1.22	4.0	8.0	Q3

Device	Package Type	Package Drawing	Pins	SPQ	Reel Diameter (mm)	Reel Width W1 (mm)	A0 (mm)	B0 (mm)	K0 (mm)	P1 (mm)	W (mm)	Pin1 Quadrant
TLVH432QDBZR	SOT-23	DBZ	3	3000	180.0	8.4	3.15	2.77	1.22	4.0	8.0	Q3
TLVH432QDBZT	SOT-23	DBZ	3	250	180.0	8.4	3.15	2.77	1.22	4.0	8.0	Q3
TLVH432QPK	SOT-89	PK	3	1000	180.0	12.4	4.91	4.52	1.9	8.0	12.0	Q3

TAPE AND REEL BOX DIMENSIONS

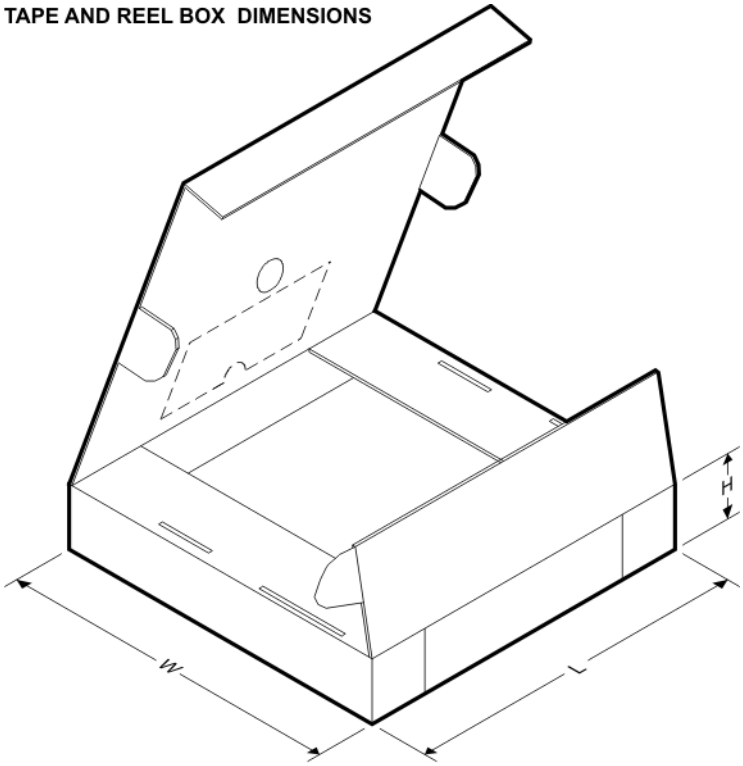

*All dimensions are nominal

Device	Package Type	Package Drawing	Pins	SPQ	Length (mm)	Width (mm)	Height (mm)
TLVH431ACDBVR	SOT-23	DBV	5	3000	180.0	180.0	18.0
TLVH431ACDBVR	SOT-23	DBV	5	3000	180.0	180.0	18.0
TLVH431ACDBVRG4	SOT-23	DBV	5	3000	180.0	180.0	18.0
TLVH431ACDBVT	SOT-23	DBV	5	250	180.0	180.0	18.0
TLVH431ACDBVT	SOT-23	DBV	5	250	180.0	180.0	18.0
TLVH431ACDBZR	SOT-23	DBZ	3	3000	183.0	183.0	20.0
TLVH431ACDBZT	SOT-23	DBZ	3	250	183.0	183.0	20.0
TLVH431ACDCKR	SC70	DCK	6	3000	200.0	183.0	25.0
TLVH431ACDCKT	SC70	DCK	6	250	203.0	203.0	35.0
TLVH431ACPK	SOT-89	PK	3	1000	340.0	340.0	38.0
TLVH431AIDBVR	SOT-23	DBV	5	3000	180.0	180.0	18.0
TLVH431AIDBVR	SOT-23	DBV	5	3000	200.0	183.0	25.0
TLVH431AIDBVT	SOT-23	DBV	5	250	203.0	203.0	35.0
TLVH431AIDBVT	SOT-23	DBV	5	250	180.0	180.0	18.0

Device	Package Type	Package Drawing	Pins	SPQ	Length (mm)	Width (mm)	Height (mm)
TLVH431AIDBZR	SOT-23	DBZ	3	3000	200.0	183.0	25.0
TLVH431AIDBZR	SOT-23	DBZ	3	3000	183.0	183.0	20.0
TLVH431AIDBZR	SOT-23	DBZ	3	3000	180.0	180.0	18.0
TLVH431AIDBZT	SOT-23	DBZ	3	250	183.0	183.0	20.0
TLVH431AIDCKR	SC70	DCK	6	3000	200.0	183.0	25.0
TLVH431AIDCKT	SC70	DCK	6	250	203.0	203.0	35.0
TLVH431AIPK	SOT-89	PK	3	1000	340.0	340.0	38.0
TLVH431AQDBVR	SOT-23	DBV	5	3000	180.0	180.0	18.0
TLVH431AQDBVR	SOT-23	DBV	5	3000	203.0	203.0	35.0
TLVH431AQDBVT	SOT-23	DBV	5	250	180.0	180.0	18.0
TLVH431AQDBVT	SOT-23	DBV	5	250	203.0	203.0	35.0
TLVH431AQDBZR	SOT-23	DBZ	3	3000	183.0	183.0	20.0
TLVH431AQDBZT	SOT-23	DBZ	3	250	183.0	183.0	20.0
TLVH431AQDCKR	SC70	DCK	6	3000	200.0	183.0	25.0
TLVH431AQDCKT	SC70	DCK	6	250	200.0	183.0	25.0
TLVH431AQPK	SOT-89	PK	3	1000	340.0	340.0	38.0
TLVH431BCDBVR	SOT-23	DBV	5	3000	200.0	183.0	25.0
TLVH431BCDBVR	SOT-23	DBV	5	3000	180.0	180.0	18.0
TLVH431BCDBVT	SOT-23	DBV	5	250	180.0	180.0	18.0
TLVH431BCDBVT	SOT-23	DBV	5	250	200.0	183.0	25.0
TLVH431BCDBZR	SOT-23	DBZ	3	3000	200.0	183.0	25.0
TLVH431BCDBZR	SOT-23	DBZ	3	3000	183.0	183.0	20.0
TLVH431BCDBZT	SOT-23	DBZ	3	250	183.0	183.0	20.0
TLVH431BCDBZTG4	SOT-23	DBZ	3	250	183.0	183.0	20.0
TLVH431BCDCKR	SC70	DCK	6	3000	200.0	183.0	25.0
TLVH431BCDCKT	SC70	DCK	6	250	200.0	183.0	25.0
TLVH431BCPK	SOT-89	PK	3	1000	340.0	340.0	38.0
TLVH431BIDBVR	SOT-23	DBV	5	3000	180.0	180.0	18.0
TLVH431BIDBVR	SOT-23	DBV	5	3000	200.0	183.0	25.0
TLVH431BIDBVT	SOT-23	DBV	5	250	180.0	180.0	18.0
TLVH431BIDBVT	SOT-23	DBV	5	250	203.0	203.0	35.0
TLVH431BIDBZR	SOT-23	DBZ	3	3000	200.0	183.0	25.0
TLVH431BIDBZR	SOT-23	DBZ	3	3000	180.0	180.0	18.0
TLVH431BIDBZR	SOT-23	DBZ	3	3000	183.0	183.0	20.0
TLVH431BIDBZT	SOT-23	DBZ	3	250	183.0	183.0	20.0
TLVH431BIDCKR	SC70	DCK	6	3000	200.0	183.0	25.0
TLVH431BIDCKT	SC70	DCK	6	250	203.0	203.0	35.0
TLVH431BIPK	SOT-89	PK	3	1000	340.0	340.0	38.0
TLVH431BQDBVR	SOT-23	DBV	5	3000	180.0	180.0	18.0
TLVH431BQDBVR	SOT-23	DBV	5	3000	200.0	183.0	25.0
TLVH431BQDBVT	SOT-23	DBV	5	250	180.0	180.0	18.0
TLVH431BQDBVT	SOT-23	DBV	5	250	203.0	203.0	35.0
TLVH431BQDBZR	SOT-23	DBZ	3	3000	183.0	183.0	20.0
TLVH431BQDBZT	SOT-23	DBZ	3	250	183.0	183.0	20.0

Device	Package Type	Package Drawing	Pins	SPQ	Length (mm)	Width (mm)	Height (mm)
TLVH431BQDCKR	SC70	DCK	6	3000	200.0	183.0	25.0
TLVH431BQDCKT	SC70	DCK	6	250	203.0	203.0	35.0
TLVH431BQPK	SOT-89	PK	3	1000	340.0	340.0	38.0
TLVH431CDBVR	SOT-23	DBV	5	3000	180.0	180.0	18.0
TLVH431CDBVR	SOT-23	DBV	5	3000	203.0	203.0	35.0
TLVH431CDBVT	SOT-23	DBV	5	250	180.0	180.0	18.0
TLVH431CDBVT	SOT-23	DBV	5	250	203.0	203.0	35.0
TLVH431CDBZR	SOT-23	DBZ	3	3000	183.0	183.0	20.0
TLVH431CDBZT	SOT-23	DBZ	3	250	183.0	183.0	20.0
TLVH431CDBZTG4	SOT-23	DBZ	3	250	183.0	183.0	20.0
TLVH431CDCKT	SC70	DCK	6	250	200.0	183.0	25.0
TLVH431CPK	SOT-89	PK	3	1000	340.0	340.0	38.0
TLVH431IDBVR	SOT-23	DBV	5	3000	200.0	183.0	25.0
TLVH431IDBVR	SOT-23	DBV	5	3000	180.0	180.0	18.0
TLVH431IDBVT	SOT-23	DBV	5	250	180.0	180.0	18.0
TLVH431IDBVT	SOT-23	DBV	5	250	203.0	203.0	35.0
TLVH431IDBZR	SOT-23	DBZ	3	3000	183.0	183.0	20.0
TLVH431IDBZT	SOT-23	DBZ	3	250	183.0	183.0	20.0
TLVH431IDCKR	SC70	DCK	6	3000	203.0	203.0	35.0
TLVH431IDCKT	SC70	DCK	6	250	203.0	203.0	35.0
TLVH431IPK	SOT-89	PK	3	1000	340.0	340.0	38.0
TLVH431QDBVR	SOT-23	DBV	5	3000	180.0	180.0	18.0
TLVH431QDBVR	SOT-23	DBV	5	3000	200.0	183.0	25.0
TLVH431QDBVT	SOT-23	DBV	5	250	203.0	203.0	35.0
TLVH431QDBVT	SOT-23	DBV	5	250	180.0	180.0	18.0
TLVH431QDBZR	SOT-23	DBZ	3	3000	183.0	183.0	20.0
TLVH431QDBZT	SOT-23	DBZ	3	250	183.0	183.0	20.0
TLVH431QDBZTG4	SOT-23	DBZ	3	250	183.0	183.0	20.0
TLVH431QDCKR	SC70	DCK	6	3000	200.0	183.0	25.0
TLVH431QDCKT	SC70	DCK	6	250	200.0	183.0	25.0
TLVH431QPK	SOT-89	PK	3	1000	340.0	340.0	38.0
TLVH432ACDBZR	SOT-23	DBZ	3	3000	183.0	183.0	20.0
TLVH432ACDBZT	SOT-23	DBZ	3	250	183.0	183.0	20.0
TLVH432AIDBZR	SOT-23	DBZ	3	3000	183.0	183.0	20.0
TLVH432AIPK	SOT-89	PK	3	1000	340.0	340.0	38.0
TLVH432AQDBZR	SOT-23	DBZ	3	3000	183.0	183.0	20.0
TLVH432AQDBZT	SOT-23	DBZ	3	250	183.0	183.0	20.0
TLVH432BCDBZR	SOT-23	DBZ	3	3000	183.0	183.0	20.0
TLVH432BCPK	SOT-89	PK	3	1000	340.0	340.0	38.0
TLVH432BIDBZR	SOT-23	DBZ	3	3000	183.0	183.0	20.0
TLVH432BQDBZR	SOT-23	DBZ	3	3000	183.0	183.0	20.0
TLVH432BQDBZT	SOT-23	DBZ	3	250	183.0	183.0	20.0
TLVH432CDBZR	SOT-23	DBZ	3	3000	183.0	183.0	20.0
TLVH432CDBZT	SOT-23	DBZ	3	250	183.0	183.0	20.0

Device	Package Type	Package Drawing	Pins	SPQ	Length (mm)	Width (mm)	Height (mm)
TLVH432CPK	SOT-89	PK	3	1000	340.0	340.0	38.0
TLVH432IDBZR	SOT-23	DBZ	3	3000	183.0	183.0	20.0
TLVH432QDBZR	SOT-23	DBZ	3	3000	183.0	183.0	20.0
TLVH432QDBZT	SOT-23	DBZ	3	250	183.0	183.0	20.0
TLVH432QPK	SOT-89	PK	3	1000	340.0	340.0	38.0

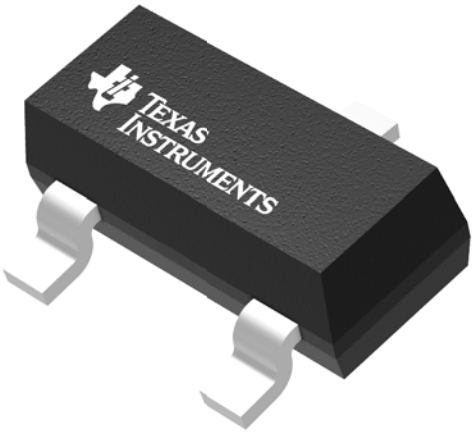

Images above are just a representation of the package family, actual package may vary.
Refer to the product data sheet for package details.

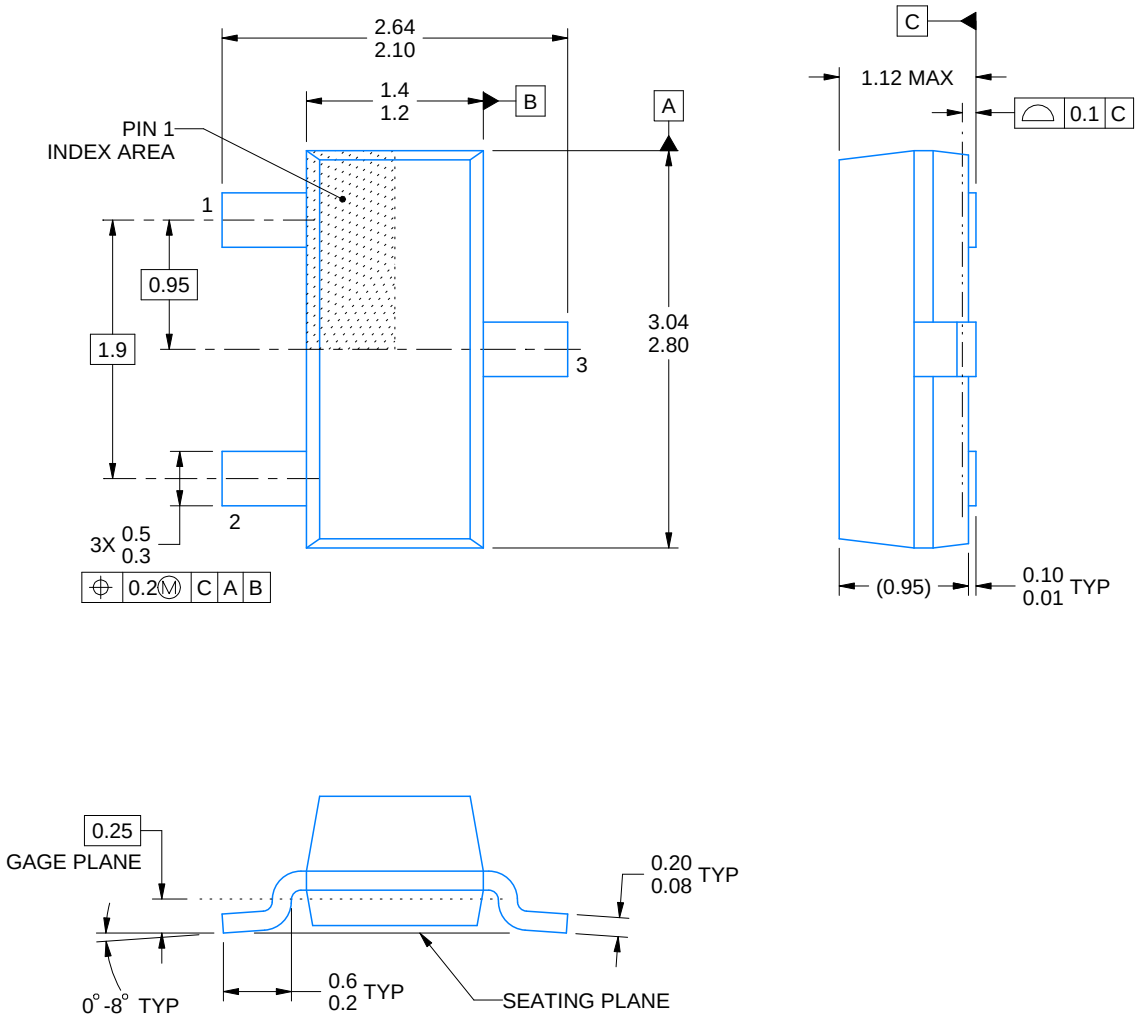

4214838/C 04/2017

NOTES:

1. All linear dimensions are in millimeters. Any dimensions in parenthesis are for reference only. Dimensioning and tolerancing per ASME Y14.5M.
2. This drawing is subject to change without notice.
3. Reference JEDEC registration TO-236, except minimum foot length.

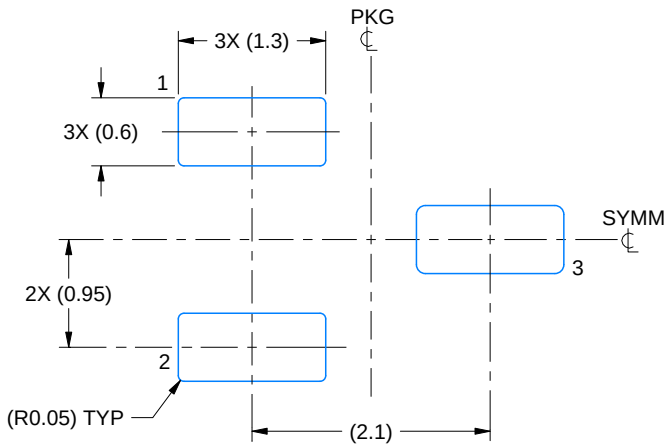

LAND PATTERN EXAMPLE
SCALE:15X

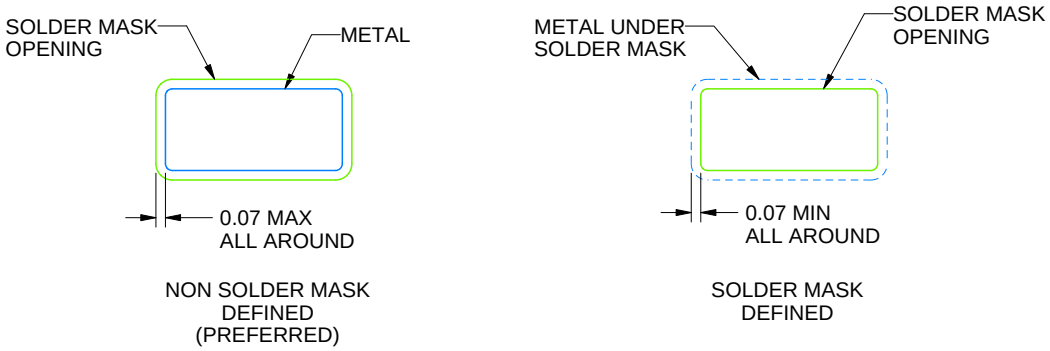

SOLDER MASK DETAILS

4214838/C 04/2017

NOTES: (continued)

4. Publication IPC-7351 may have alternate designs.
5. Solder mask tolerances between and around signal pads can vary based on board fabrication site.

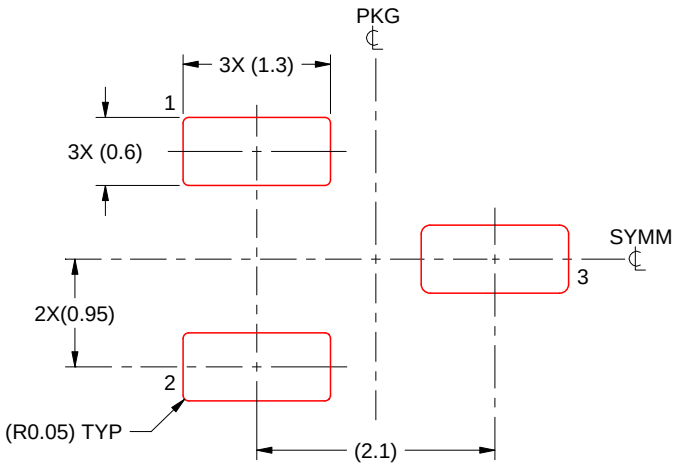

SOLDER PASTE EXAMPLE
BASED ON 0.125 THICK STENCIL
SCALE:15X

4214838/C 04/2017

NOTES: (continued)

6. Laser cutting apertures with trapezoidal walls and rounded corners may offer better paste release. IPC-7525 may have alternate design recommendations.
7. Board assembly site may have different recommendations for stencil design.

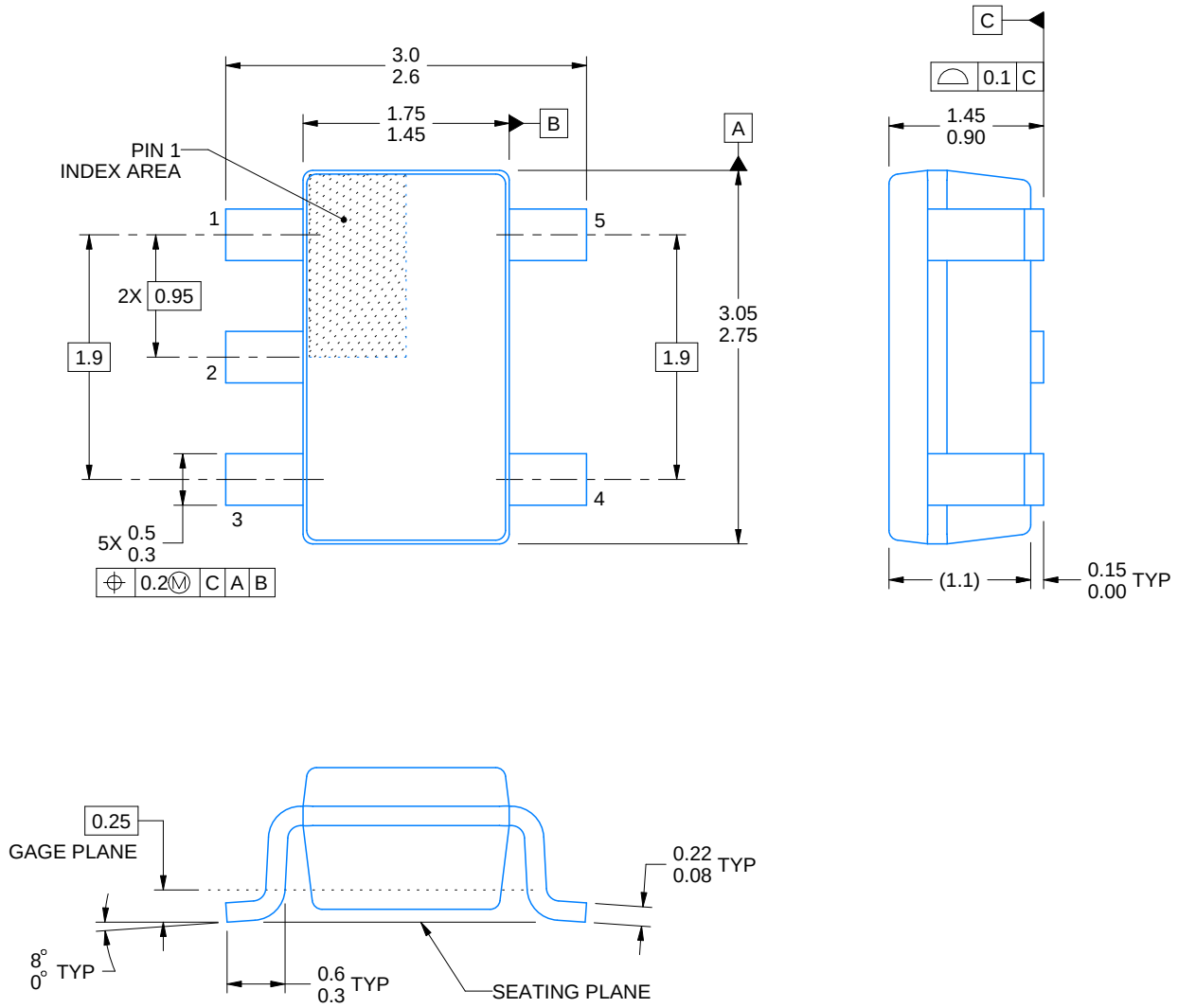

4214839/F 06/2021

NOTES:

1. All linear dimensions are in millimeters. Any dimensions in parenthesis are for reference only. Dimensioning and tolerancing per ASME Y14.5M.
2. This drawing is subject to change without notice.
3. Refernce JEDEC MO-178.
4. Body dimensions do not include mold flash, protrusions, or gate burrs. Mold flash, protrusions, or gate burrs shall not exceed 0.25 mm per side.

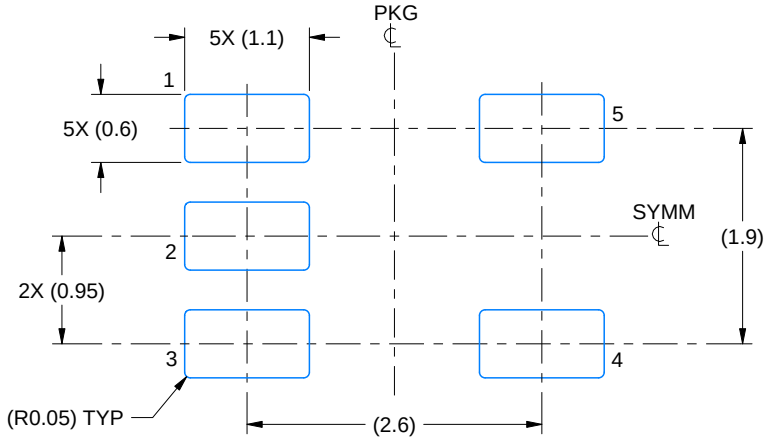

LAND PATTERN EXAMPLE
EXPOSED METAL SHOWN
SCALE:15X

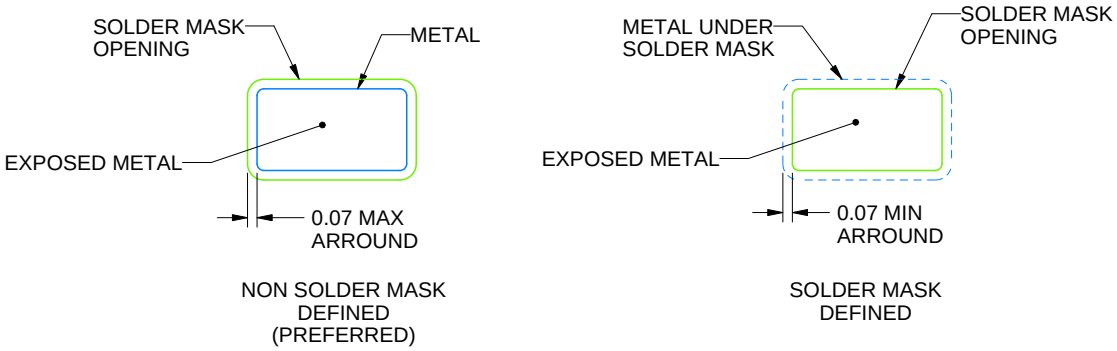

SOLDER MASK DETAILS

4214839/F 06/2021

NOTES: (continued)

5. Publication IPC-7351 may have alternate designs.
6. Solder mask tolerances between and around signal pads can vary based on board fabrication site.

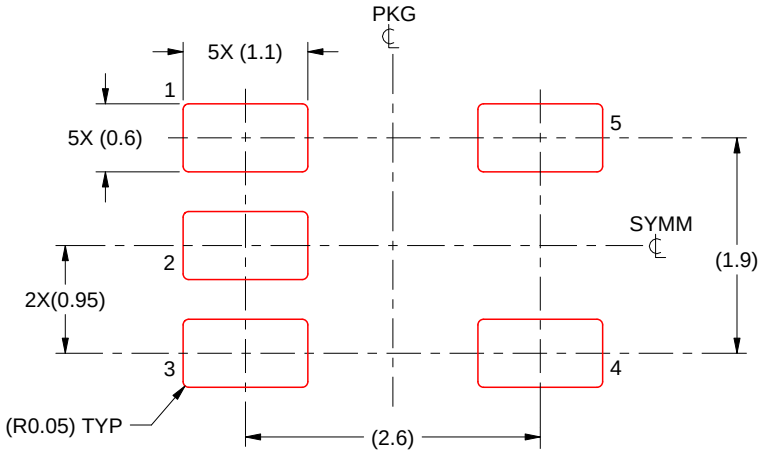

SOLDER PASTE EXAMPLE
BASED ON 0.125 mm THICK STENCIL
SCALE:15X

4214839/F 06/2021

NOTES: (continued)

7. Laser cutting apertures with trapezoidal walls and rounded corners may offer better paste release. IPC-7525 may have alternate design recommendations.
8. Board assembly site may have different recommendations for stencil design.

PK (R–PSSO–F3) PLASTIC SINGLE–IN–LINE PACKAGE

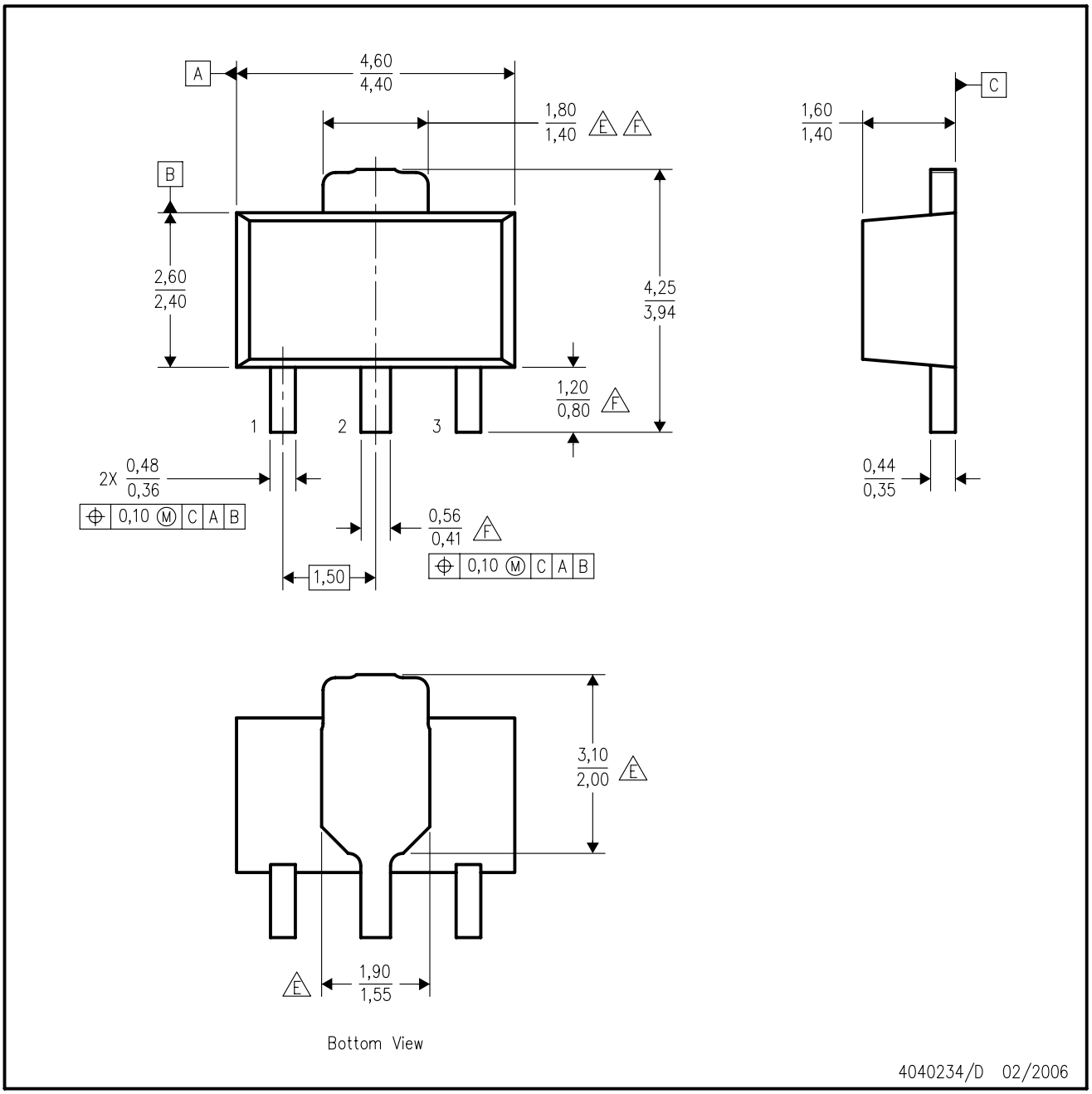

NOTES:
- A. All linear dimensions are in millimeters. Dimensioning and tolerancing per ASME Y14.5M–1994.
- B. This drawing is subject to change without notice.
- C. The center lead is in electrical contact with the tab.
- D. Body dimensions do not include mold flash or protrusion. Mold flash and protrusion not to exceed 0.15 per side.
- E. Thermal pad contour optional within these dimensions.
- F. Falls within JEDEC TO–243 variation AA, except minimum lead length, pin 2 minimum lead width, minimum tab width.

PK (R–PDSO–G3)

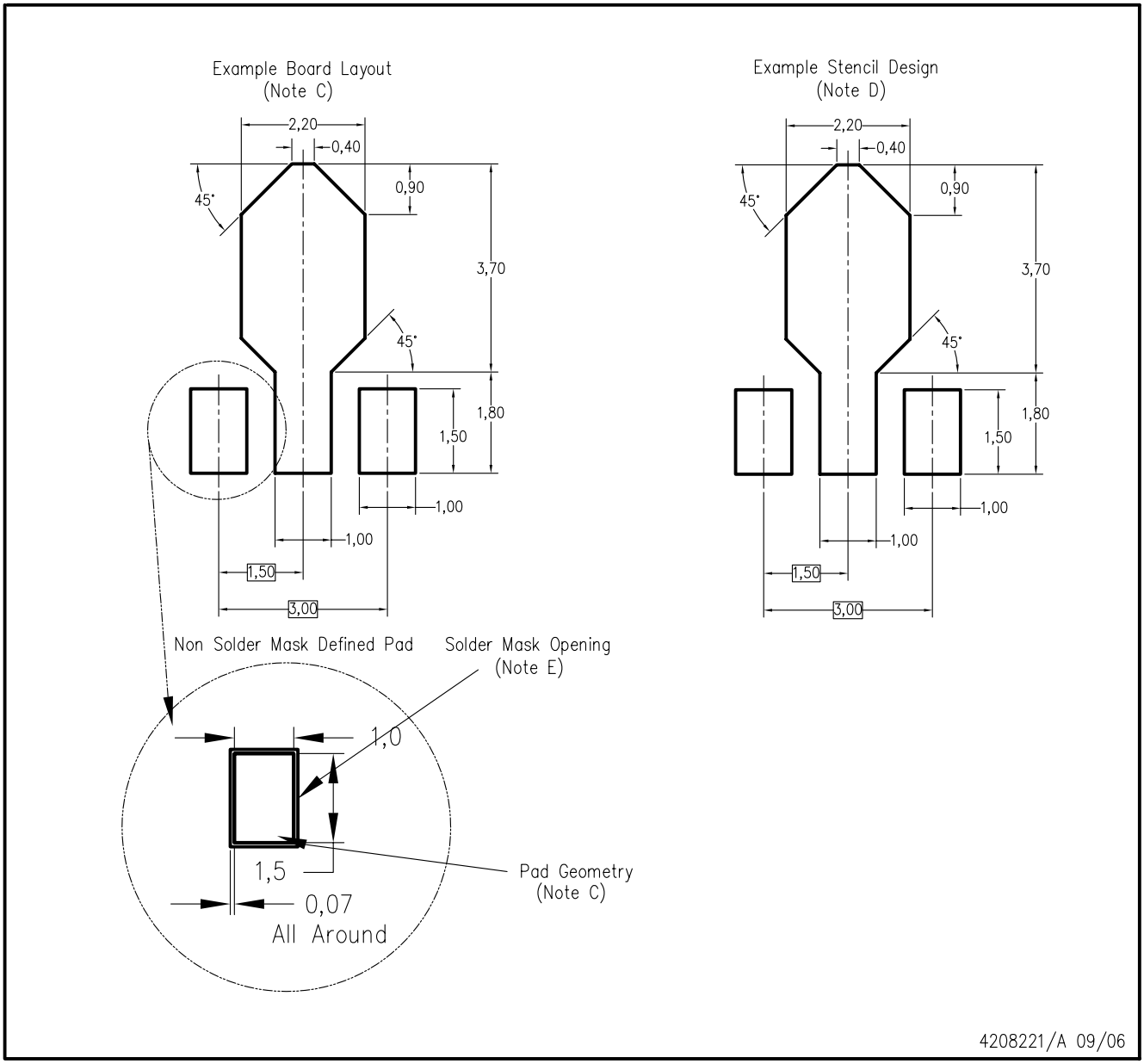

NOTES:
A. All linear dimensions are in millimeters.
B. This drawing is subject to change without notice.
C. Publication IPC–7351 is recommended for alternate designs.
D. Laser cutting apertures with trapezoidal walls and also rounding corners will offer better paste release. Customers should contact their board assembly site for stencil design recommendations. Refer to IPC–7525.
E. Customers should contact their board fabrication site for solder mask tolerances between and around signal pads.

DCK (R–PDSO–G6) PLASTIC SMALL–OUTLINE PACKAGE

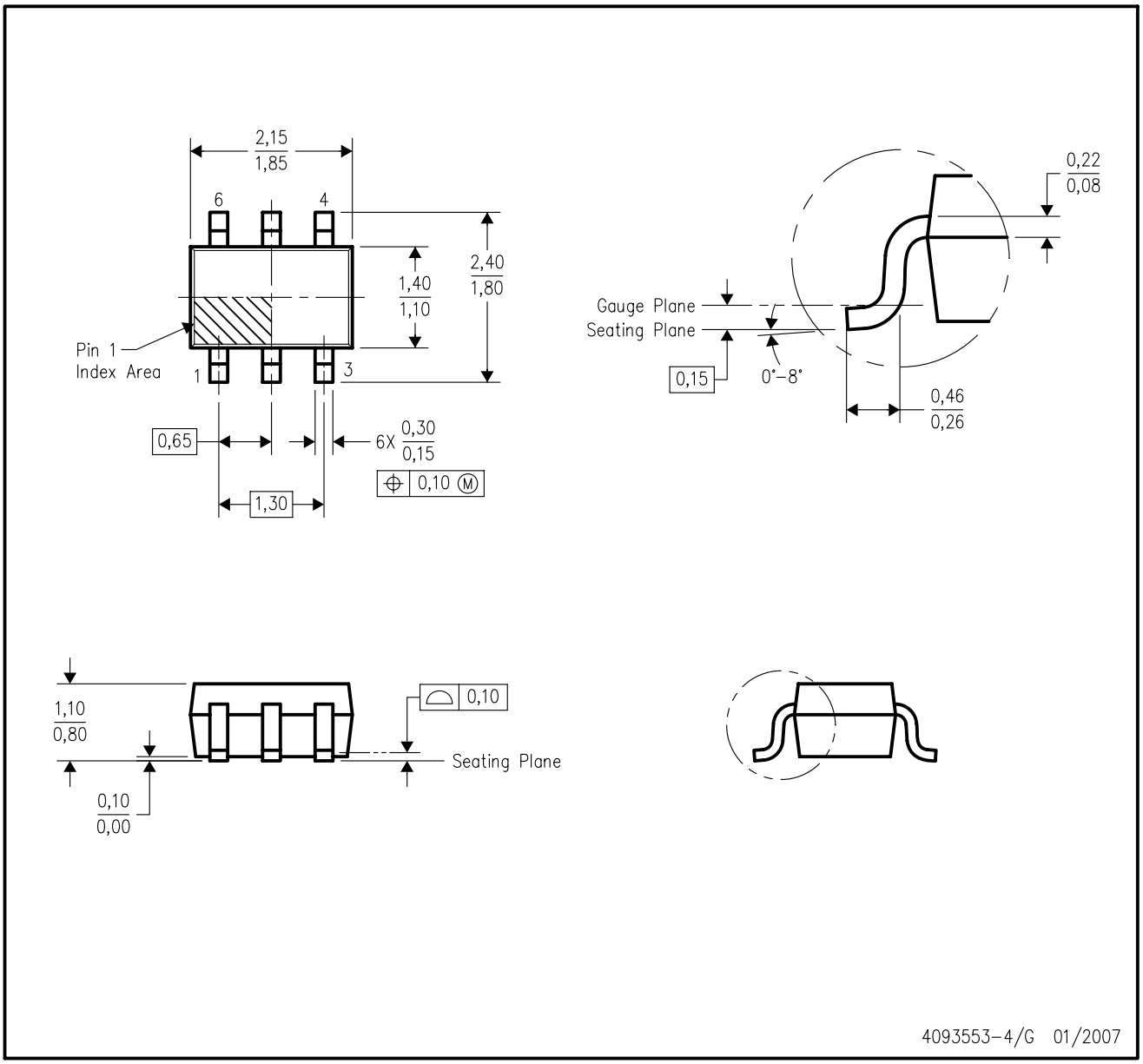

NOTES:
A. All linear dimensions are in millimeters.
B. This drawing is subject to change without notice.
C. Body dimensions do not include mold flash or protrusion. Mold flash and protrusion shall not exceed 0.15 per side.
D. Falls within JEDEC MO–203 variation AB.

DCK (R-PDSO-G6) PLASTIC SMALL OUTLINE

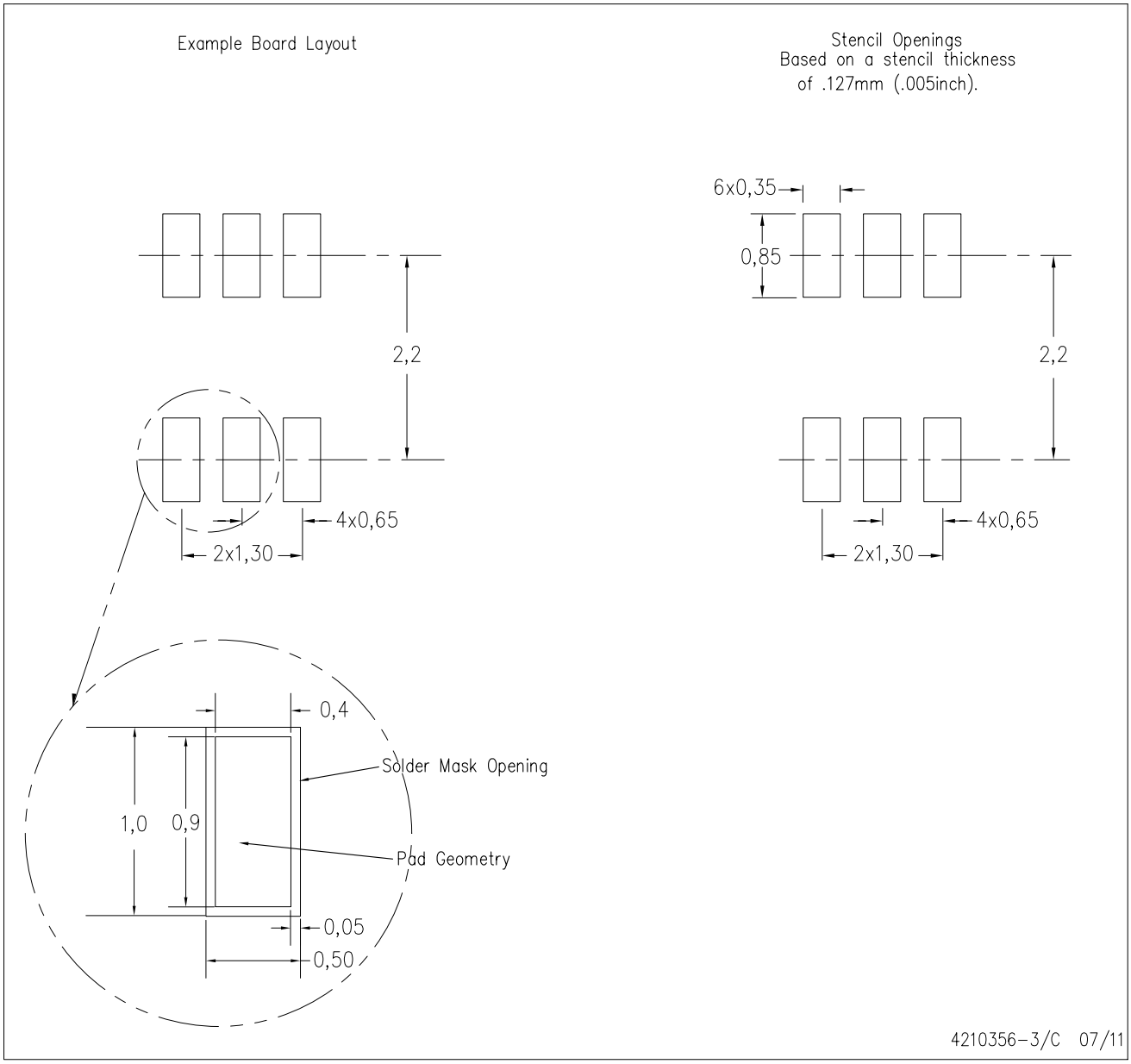

NOTES:
A. All linear dimensions are in millimeters.
B. This drawing is subject to change without notice.
C. Customers should place a note on the circuit board fabrication drawing not to alter the center solder mask defined pad.
D. Publication IPC-7351 is recommended for alternate designs.
E. Laser cutting apertures with trapezoidal walls and also rounding corners will offer better paste release. Customers should contact their board assembly site for stencil design recommendations. Example stencil design based on a 50% volumetric metal load solder paste. Refer to IPC-7525 for other stencil recommendations.

Images above are just a representation of the package family, actual package may vary.
Refer to the product data sheet for package details.

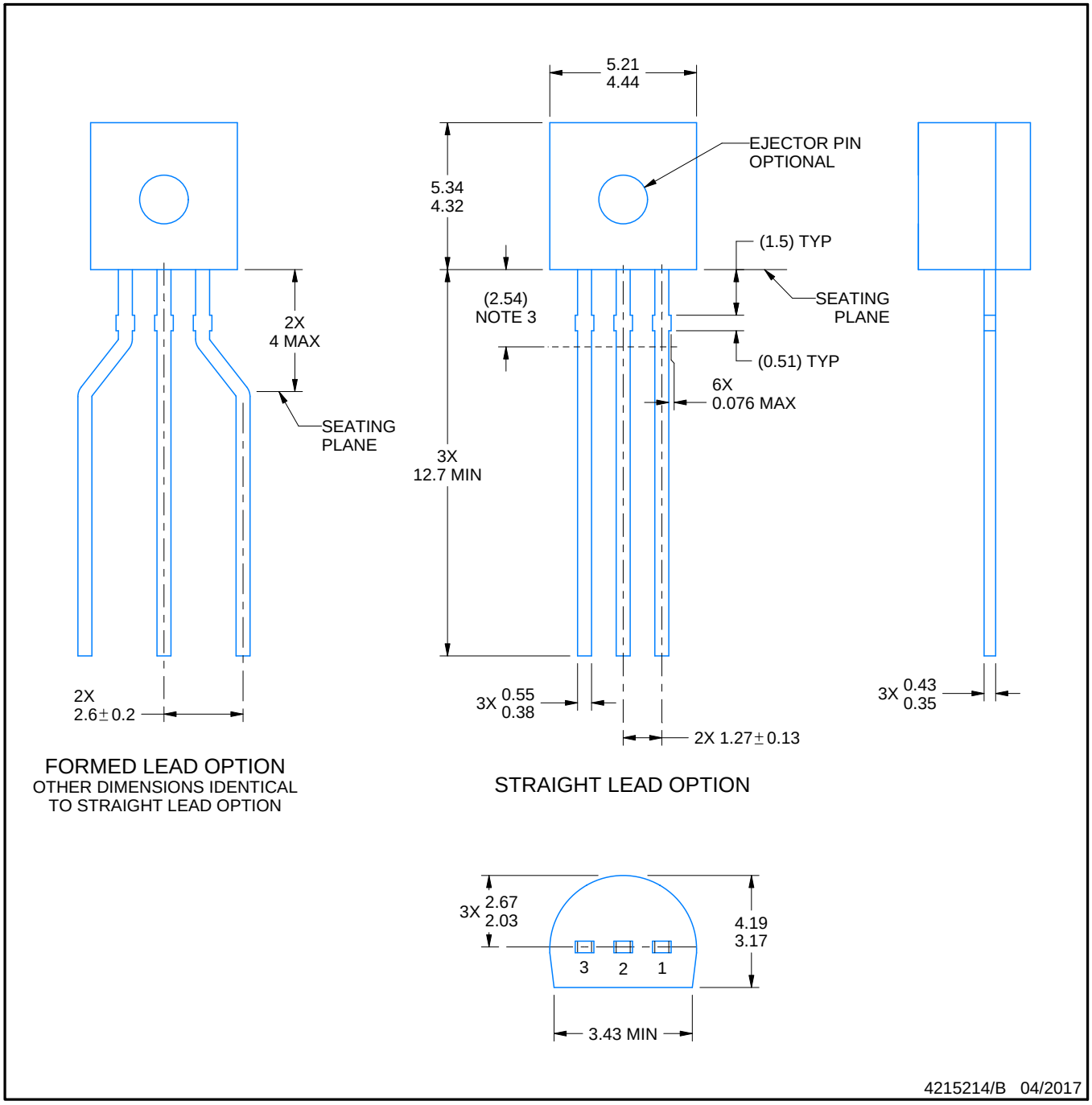

NOTES:

1. All linear dimensions are in millimeters. Any dimensions in parenthesis are for reference only. Dimensioning and tolerancing per ASME Y14.5M.
2. This drawing is subject to change without notice.
3. Lead dimensions are not controlled within this area.
4. Reference JEDEC TO-226, variation AA.
5. Shipping method:
   a. Straight lead option available in bulk pack only.
   b. Formed lead option available in tape and reel or ammo pack.
   c. Specific products can be offered in limited combinations of shipping medium and lead options.
   d. Consult product folder for more information on available options.

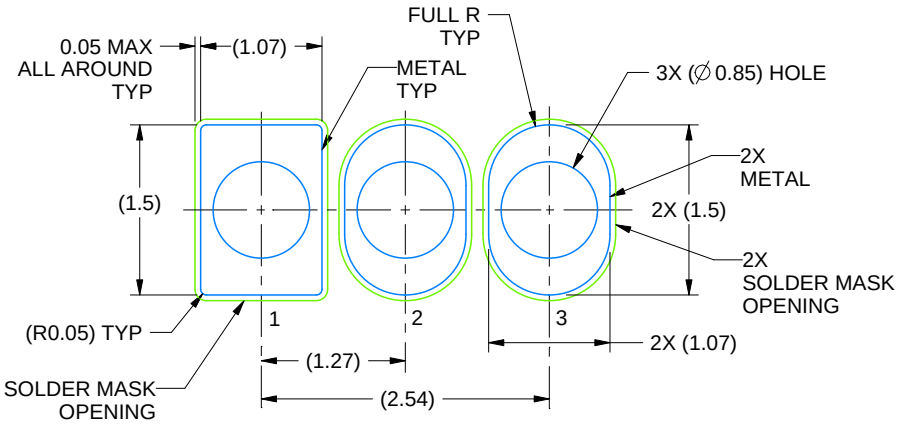

LAND PATTERN EXAMPLE
STRAIGHT LEAD OPTION
NON-SOLDER MASK DEFINED
SCALE:15X

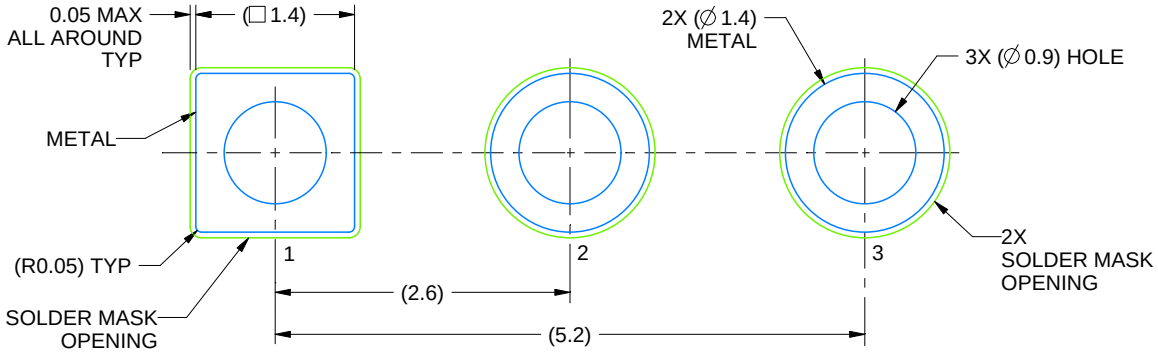

LAND PATTERN EXAMPLE
FORMED LEAD OPTION
NON-SOLDER MASK DEFINED
SCALE:15X

4215214/B 04/2017

TO-92

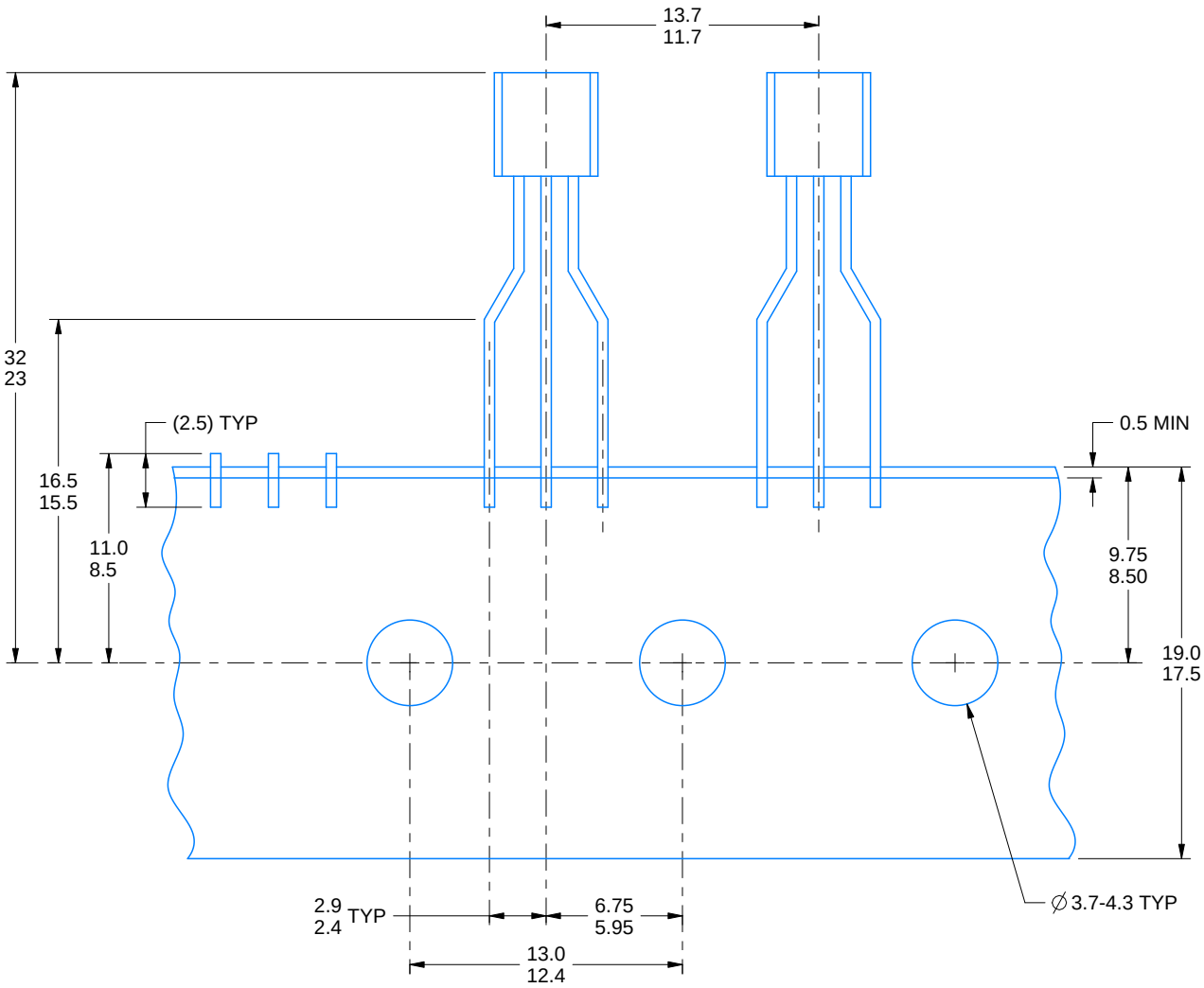

FOR FORMED LEAD OPTION PACKAGE

4215214/B 04/2017

IMPORTANT NOTICE AND DISCLAIMER

TI PROVIDES TECHNICAL AND RELIABILITY DATA (INCLUDING DATA SHEETS), DESIGN RESOURCES (INCLUDING REFERENCE DESIGNS), APPLICATION OR OTHER DESIGN ADVICE, WEB TOOLS, SAFETY INFORMATION, AND OTHER RESOURCES “AS IS” AND WITH ALL FAULTS, AND DISCLAIMS ALL WARRANTIES, EXPRESS AND IMPLIED, INCLUDING WITHOUT LIMITATION ANY IMPLIED WARRANTIES OF MERCHANTABILITY, FITNESS FOR A PARTICULAR PURPOSE OR NON-INFRINGEMENT OF THIRD PARTY INTELLECTUAL PROPERTY RIGHTS.

These resources are intended for skilled developers designing with TI products. You are solely responsible for (1) selecting the appropriate TI products for your application, (2) designing, validating and testing your application, and (3) ensuring your application meets applicable standards, and any other safety, security, regulatory or other requirements.

These resources are subject to change without notice. TI grants you permission to use these resources only for development of an application that uses the TI products described in the resource. Other reproduction and display of these resources is prohibited. No license is granted to any other TI intellectual property right or to any third party intellectual property right. TI disclaims responsibility for, and you will fully indemnify TI and its representatives against, any claims, damages, costs, losses, and liabilities arising out of your use of these resources.

TI’s products are provided subject to TI’s Terms of Sale or other applicable terms available either on ti.com or provided in conjunction with such TI products. TI’s provision of these resources does not expand or otherwise alter TI’s applicable warranties or warranty disclaimers for TI products.

TI objects to and rejects any additional or different terms you may have proposed.

Mailing Address: Texas Instruments, Post Office Box 655303, Dallas, Texas 75265
Copyright © 2022, Texas Instruments Incorporated