INA19xA-Q1 共模电压范围为 -16V 至 80V 的分流监测计

1 特性

- 适用于汽车电子 应用
- 宽共模电压范围：
  -16V 至 80V
- 低误差：3% 过热（最大值）
- 带宽：高达 500kHz
- 三种传递函数：20V/V、50V/V 和 100V/V
- 完整的电流感测解决方案

2 应用

- 焊接设备
- 车身控制模块
- 负载健康状况监视
- 电信设备
- 混合动力汽车 (HEV)/电动汽车 (EV) 动力传动
- 电源管理
- 电池充电器

3 说明

INA19xA-Q1 系列是电压输出分流监测计，能够在 -16V 至 80V 范围内的共模电压下感测分流器两端的压降，与 INA19xA 电源电压无关。该系列器件提供三种输出电压级别：20V/V、50V/V 和 100V/V。500kHz 带宽方便用于电流控制回路和直流电机健康状态监控。INA193A–INA195A 器件与 INA196A–INA198A 器件的功能相同，但引脚配置有所不同。

INA19xA-Q1 由 2.7V 至 18V 单电源供电运行。这些器件均在 -40°C 至 125°C 的扩展运行温度范围内额定运行，并且采用节省空间的 SOT-23 封装。

器件信息(1)

器件型号	封装	封装尺寸（标称值）
INA19xA-Q1	SOT-23 (5)	2.90mm x 1.60mm

(1) 要了解所有可用封装，请见数据表末尾的可订购产品附录。

简化电路原理图

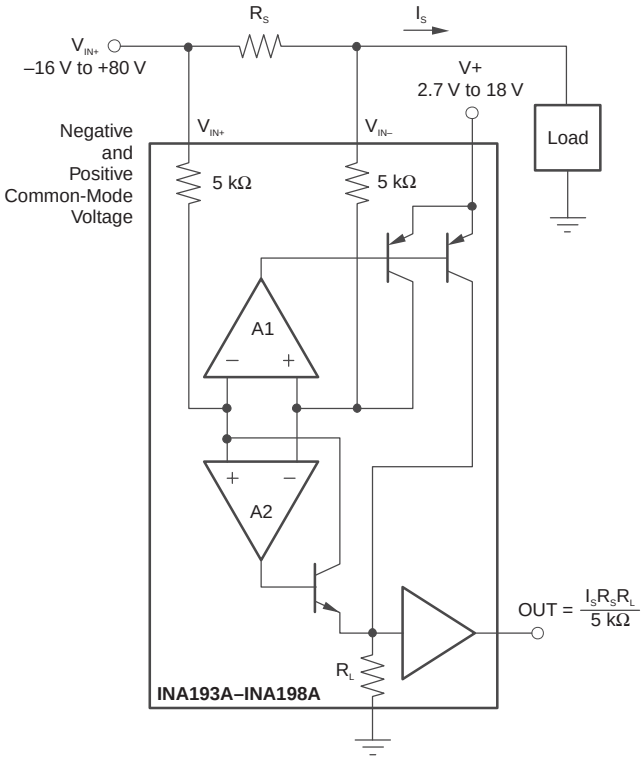

An IMPORTANT NOTICE at the end of this data sheet addresses availability, warranty, changes, use in safety-critical applications, intellectual property matters and other important disclaimers. PRODUCTION DATA.

目录

1 特性 ... 1
2 应用 ... 1
3 说明 ... 1
4 修订历史记录 ... 2
5 **Pin Configuration and Functions** ... 3
6 **Specifications** ... 4
6.1 Absolute Maximum Ratings ... 4
6.2 ESD Ratings ... 4
6.3 Recommended Operating Conditions ... 4
6.4 Thermal Information ... 4
6.5 Electrical Characteristics ... 5
6.6 Typical Characteristics ... 7
7 **Detailed Description** ... 11
7.1 Overview ... 11
7.2 Functional Block Diagram ... 11
7.3 Feature Description ... 11
7.4 Device Functional Modes ... 16
8 **Application and Implementation** ... 20
8.1 Application Information ... 20
8.2 Typical Application ... 20
9 **Power Supply Recommendations** ... 21
10 **Layout** ... 22
10.1 Layout Guidelines ... 22
10.2 Layout Example ... 22
11 器件和文档支持 ... 23
11.1 相关链接 ... 23
11.2 社区资源 ... 23
11.3 商标 ... 23
11.4 静电放电警告 ... 23
11.5 Glossary ... 23
12 机械、封装和可订购信息 ... 23

4 修订历史记录

注：之前版本的页码可能与当前版本有所不同。

Changes from Revision C (October 2008) to Revision D	**Page**
• 已添加 *ESD 额定值表*，*特性 描述* 部分，*器件功能模式*，*应用和实施*部分，*电源相关建议*部分，*布局*部分，*器件和文档支持*部分以及*机械、封装和可订购信息*部分	1
• Added Input Bias Current vs Common Mode Voltage Vs=5 Vgraph to*Typical Characteristics*	7
• Added Input Bias Current vs Common Mode Voltage Vs=12 V graph to *Typical Characteristics*	7

Copyright © 2006–2015, Texas Instruments Incorporated

5 Pin Configuration and Functions

DBV Package
5-Pin SOT-23
INA193A-Q1, INA194A-Q1, INA195A-Q1 Top View

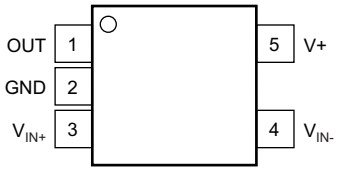

DBV Package
5-Pin SOT-23
INA196A-Q1, INA197A-Q1, INA198A-Q1 Top View

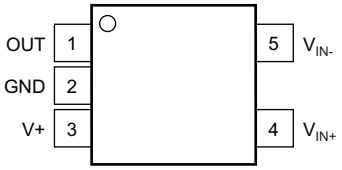

Pin Functions

PIN			TYPE	DESCRIPTION
NAME	INA193A-Q1, INA194A-Q1, INA195A-Q1	INA196A-Q1, INA197A-Q1, INA198A-Q1		
GND	2	2	GND	Ground
OUT	1	1	O	Output voltage
V+	5	3	Analog	Power supply, 2.7 to 18 V
V_{IN+}	3	4	I	Connect to supply side of shunt resistor
$V_{IN–}$	4	5	I	Connect to load side of shunt resistor

Copyright © 2006–2015, Texas Instruments Incorporated

6 Specifications

6.1 Absolute Maximum Ratings

over operating free-air temperature range (unless otherwise noted)[1]

		MIN	MAX	UNIT
Supply voltage			18	V
Differential input voltage range, analog inputs ($V_{IN+} – V_{IN–}$)		–18	18	V
Common-mode voltage range[2]		–16	80	V
Analog output voltage range[2]	OUT	GND – 0.3	(V+) + 0.3	V
Input current into any pin[2]			5	mA
Junction temperature			150	°C
Storage temperature, T_{stg}		–65	150	°C

(1) Stresses beyond those listed under *Absolute Maximum Ratings* may cause permanent damage to the device. These are stress ratings only, which do not imply functional operation of the device at these or any other conditions beyond those indicated under *Recommended Operating Conditions*. Exposure to absolute-maximum-rated conditions for extended periods may affect device reliability.
(2) Input voltage at any pin may exceed the voltage shown if the current at that pin is limited to 5 mA.

6.2 ESD Ratings

			VALUE	UNIT
$V_{(ESD)}$	Electrostatic discharge	Human-body model (HBM), per AEC Q100-002[1]	±4000	V
		Charged-device model (CDM), per AEC Q100-011	±1000	
		Machine model	±200	

(1) AEC Q100-002 indicates that HBM stressing shall be in accordance with the ANSI/ESDA/JEDEC JS-001 specification.

6.3 Recommended Operating Conditions

over operating free-air temperature range (unless otherwise noted)

		MIN	NOM	MAX	UNIT
V_{CM}	Common-mode input voltage		12		V
V+	Operating supply voltage		12		V
T_A	Operating free-air temperature	-40		125	ºC

6.4 Thermal Information

THERMAL METRIC[1]		INA19xA-Q1 DBV (SOT-23) 5 PINS	UNIT
$R_{\theta JA}$	Junction-to-ambient thermal resistance	221.7	°C/W
$R_{\theta JC(top)}$	Junction-to-case (top) thermal resistance	144.7	°C/W
$R_{\theta JB}$	Junction-to-board thermal resistance	49.7	°C/W
ψ_{JT}	Junction-to-top characterization parameter	26.1	°C/W
ψ_{JB}	Junction-to-board characterization parameter	49	°C/W

(1) For more information about traditional and new thermal metrics, see the *Semiconductor and IC Package Thermal Metrics* application report, SPRA953.

Copyright © 2006–2015, Texas Instruments Incorporated

6.5 Electrical Characteristics

V_S = 12 V, V_{IN+} = 12 V, V_{SENSE} = 100 mV (unless otherwise noted) Full range T_A = –40°C to 125°C

PARAMETER		TEST CONDITIONS		T_A	MIN	TYP	MAX	UNIT
INPUT								
V_{SENSE}	Full-scale input voltage	$V_{SENSE} = V_{IN+} - V_{IN-}$		25°C		0.15	(V_S – 0.2)/ Gain	V
VCM	Common-mode input			Full range	–16		80	V
CMR	Common-mode rejection	V_{IN+} = −16 V to 80 V		25°C	80	94		dB
		V_{IN+} = 12 V to 80 V		Full range	100	120		
V_{OS}	Offset voltage, RTI			25°C		±0.5	2	mV
				Full range		0.5	3	
dV_{OS}/dT	Offset voltage vs temperature			Full range		2.5		µV/°C
PSR	Offset voltage vs power supply	V_S = 2.7 V to 18 V, V_{IN+} = 18 V		Full range		5	100	µV/V
I_B	Input bias current	V_{IN-} pin		Full range		±8	±23	µA
OUTPUT (V_{SENSE} ≥ 20 mV)								
G	Gain	INA193A, INA196A		25°C		20		V/V
		INA194A, INA197A				50		
		INA195A, INA198A				100		
	Gain error	V_{SENSE} = 20 mV to 100 mV		25°C		±0.2%	±1%	
				Full range			±2%	
	Total output error(1)			25°C		±0.75%	±2.2%	
				Full range		±1%	±3%	
	Nonlinearity error	V_{SENSE} = 20 mV to 100 mV		25°C		±0.002%	±0.1%	
R_O	Output impedance			25°C		1.5		Ω
	Maximum capacitive load	No sustained oscillation		25°C		10		nF
OUTPUT (V_{SENSE} < 20 mV) (2)								
V_{OUT}	Output voltage	All devices	–16 V ≤ V_{CM} < 0	25°C		300		mV
			V_S < V_{CM} ≤ 80 V			300		
		INA193A, INA196A	0 V ≤ V_{CM} ≤ V_S, V_S = 5 V				0.4	V
		INA194A, INA197A					1	
		INA195A, INA198A					2	
VOLTAGE OUTPUT(3)								
	Swing to V+ power-supply rail	R_L = 100 kΩ to GND		Full range		V+ – 0.1	V+ – 0.2	V
	Swing to GND(4)	R_L = 100 kΩ to GND		Full range		V_{GND} + 3	V_{GND} + 50	mV

(1) Total output error includes effects of gain error and V_{OS}.
(2) For details on this region of operation, see *Accuracy Variations as a Result Of V_{SENSE} and Common Mode Voltage*.
(3) See Figure 7.
(4) Specified by design

Copyright © 2006–2015, Texas Instruments Incorporated

Electrical Characteristics (continued)

V_S = 12 V, V_{IN+} = 12 V, V_{SENSE} = 100 mV (unless otherwise noted) Full range T_A = –40°C to 125°C

PARAMETER		TEST CONDITIONS		T_A	MIN	TYP	MAX	UNIT
FREQUENCY RESPONSE								
BW	Bandwidth	INA193A, INA196A	C_{LOAD} = 5 pF	25°C		500		kHz
		INA194A, INA197A				300		
		INA195A, INA198A				200		
	Phase margin	C_{LOAD} < 10 nF		25°C		40		°
SR	Slew rate					1		V/µs
t_s	Settling time (1%)	V_{SENSE} = 10 mV to 100 mV_{PP}, C_{LOAD} = 5 pF		25°C		2		µs
NOISE, RTI								
	Voltage noise density			25°C		40		nV/√Hz
POWER SUPPLY								
V_S	Operating voltage			Full range	2.7		18	V
I_Q	Quiescent current	V_{OUT} = 2 V		Full range		700	1250	µA
		INA193A, INA194A, INA196A, INA197A	V_{SENSE} = 0 mV	Full range		370	950	
		INA195A, INA198A				370	1050	
TEMPERATURE RANGE								
	Operating temperature				–40		125	°C
	Storage temperature				–65		150	°C

Copyright © 2006–2015, Texas Instruments Incorporated

6.6 Typical Characteristics

T_A = 25°C, V_S = 12 V, V_{IN+} = 12 V, and V_{SENSE} = 100 mV (unless otherwise noted)

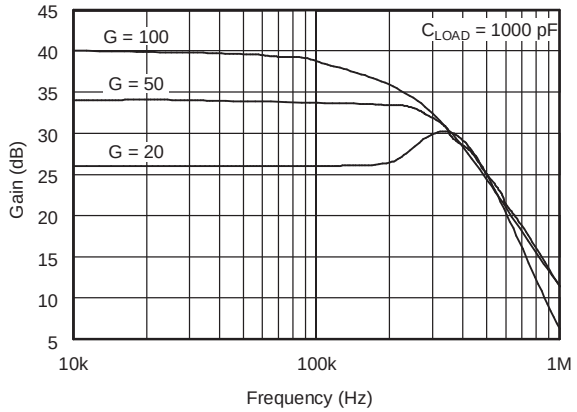

Figure 1. Gain vs Frequency

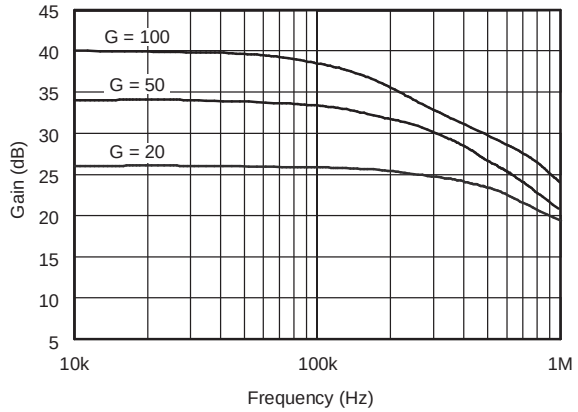

Figure 2. Gain vs Frequency

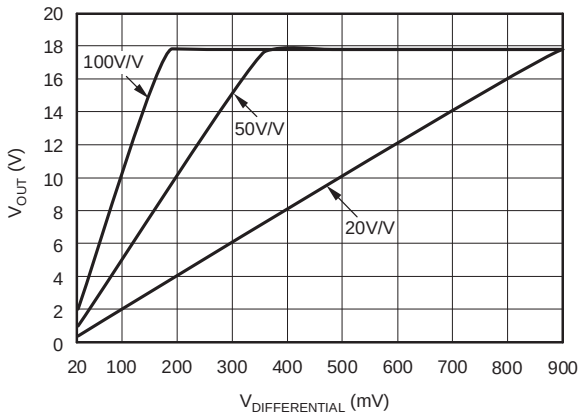

Figure 3. Gain Plot

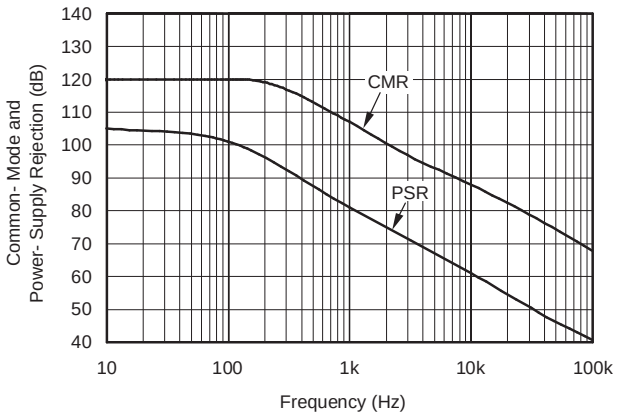

Figure 4. Common-Mode and Power-Supply Rejection vs Frequency

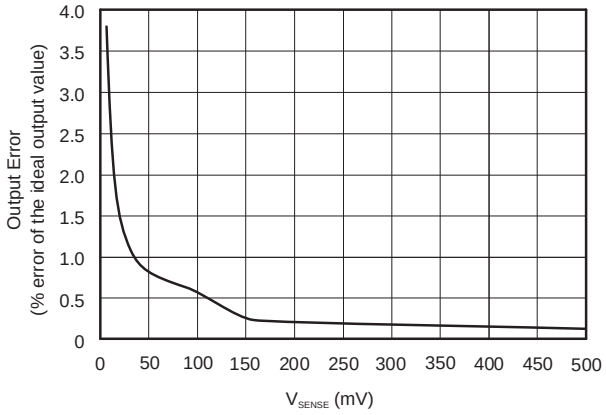

Figure 5. Output Error vs Vsense

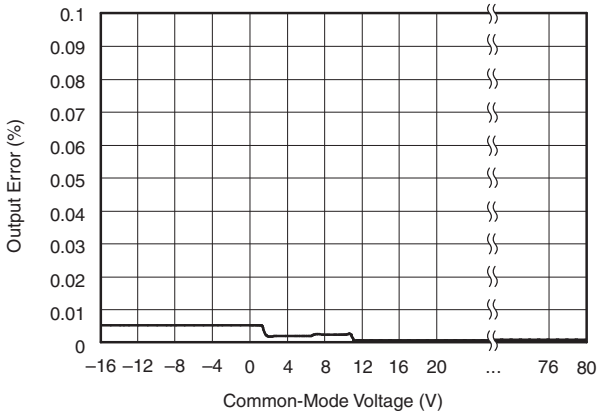

Figure 6. Output Error vs Common-Mode Voltage

Typical Characteristics (continued)

T_A = 25°C, V_S = 12 V, V_{IN+} = 12 V, and V_{SENSE} = 100 mV (unless otherwise noted)

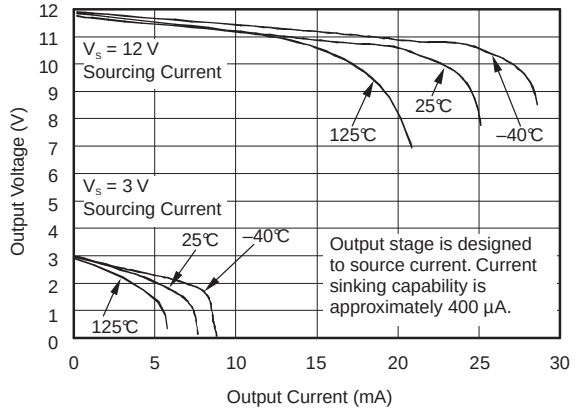

Figure 7. Positive Output Voltage Swing vs Output Current

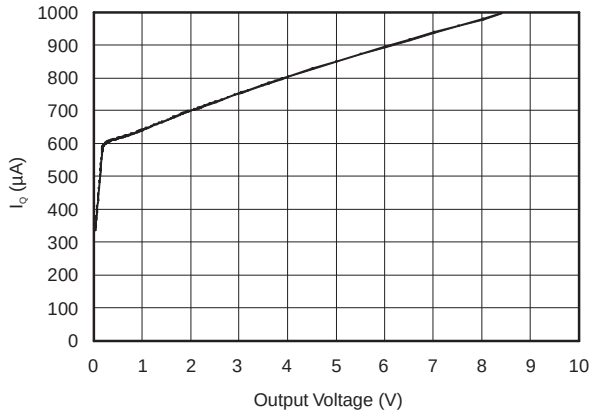

Figure 8. Quiescent Current vs Output Voltage

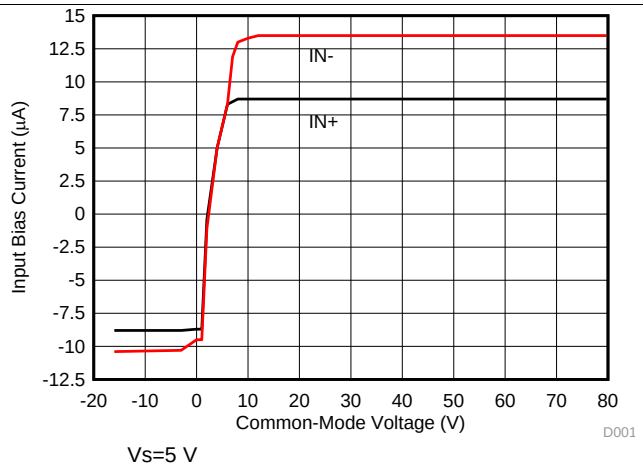

Figure 9. Input Bias Current vs Common Mode Voltage

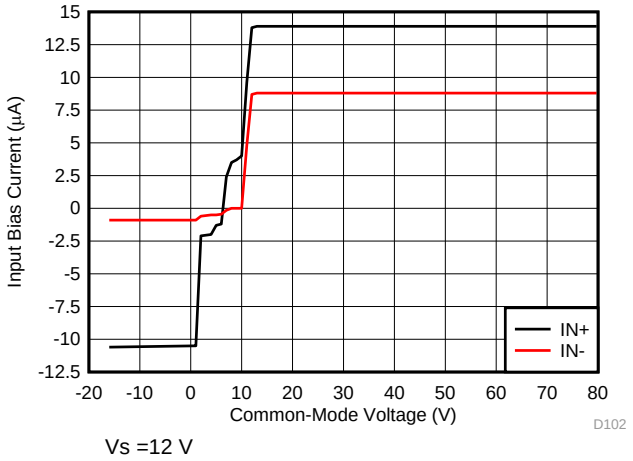

Figure 10. Input Bias Current vs Common Mode Voltage

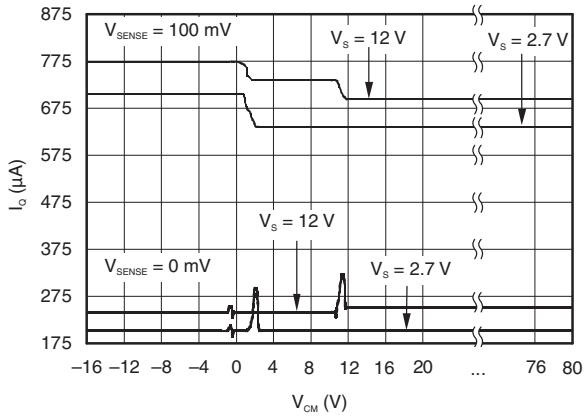

Figure 11. Quiescent Current vs Common Mode Voltage

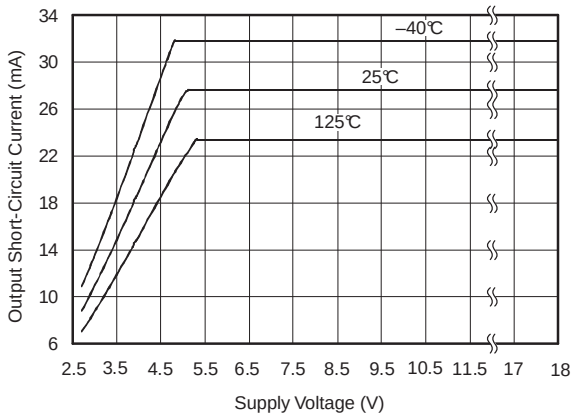

Figure 12. Output Short Circuit Current vs Supply Voltage

Copyright © 2006–2015, Texas Instruments Incorporated

Typical Characteristics (continued)

T_A = 25°C, V_S = 12 V, V_{IN+} = 12 V, and V_{SENSE} = 100 mV (unless otherwise noted)

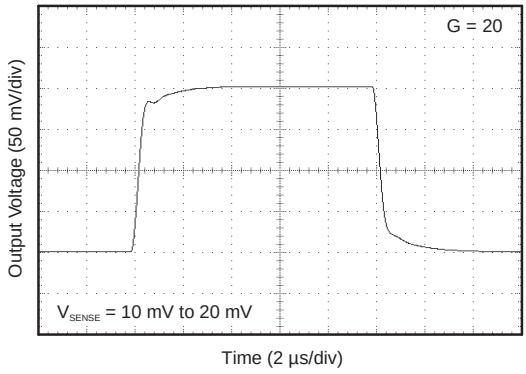

Figure 13. Step Response

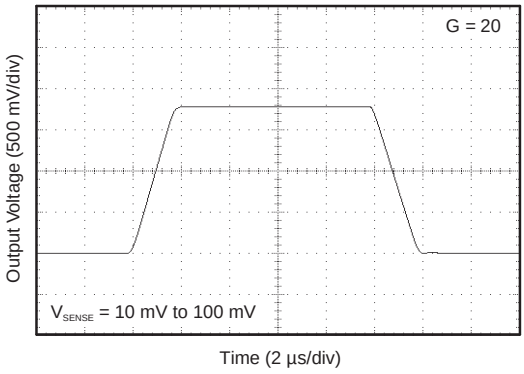

Figure 14. Step Response

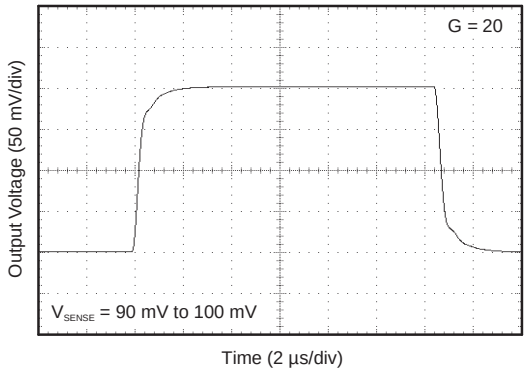

Figure 15. Step Response

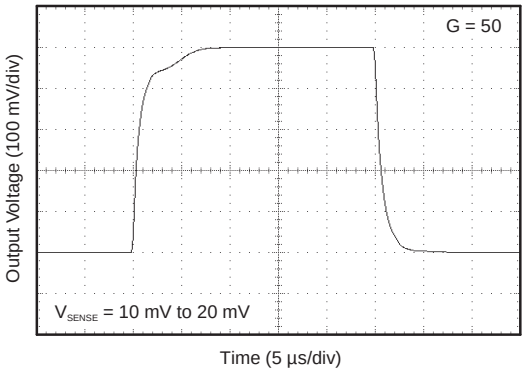

Figure 16. Step Response

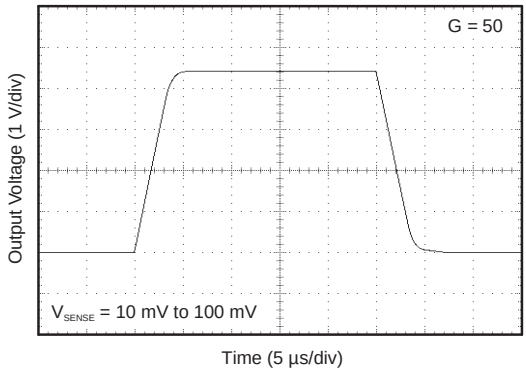

Figure 17. Step Response

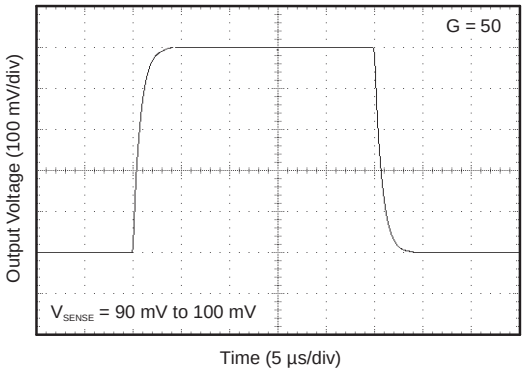

Figure 18. Step Response

Copyright © 2006–2015, Texas Instruments Incorporated

Typical Characteristics (continued)

T_A = 25°C, V_S = 12 V, V_{IN+} = 12 V, and V_{SENSE} = 100 mV (unless otherwise noted)

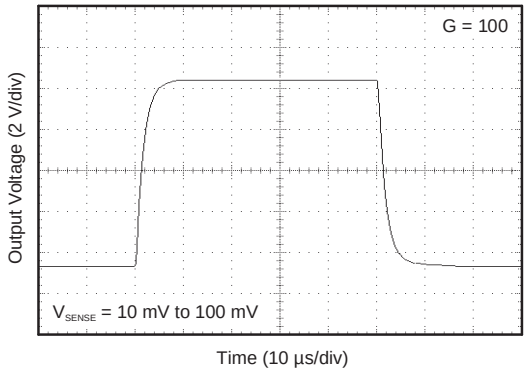

Figure 19. Step Response

Copyright © 2006–2015, Texas Instruments Incorporated

7 Detailed Description

7.1 Overview

The INA193A−INA198A family of current shunt monitors with voltage output can sense drops across shunts at common mode voltages from −16 V to 80 V, independent of the INA19x supply voltage. They are available with three output voltage scales: 20 V/V, 50 V/V, and 100 V/V. The 500-kHz bandwidth simplifies use in current control loops. The INA193A−INA195A devices provide identical functions but alternative pin configurations to the INA196A−INA198A, respectively.

The INA193A−INA198A devices operate from a single 2.7-V to 18-V supply, drawing a maximum of 900 μA of supply current. They are specified over the extended operating temperature range (−40°C to 125°C), and are offered in a space-saving SOT-23 package.

7.2 Functional Block Diagram

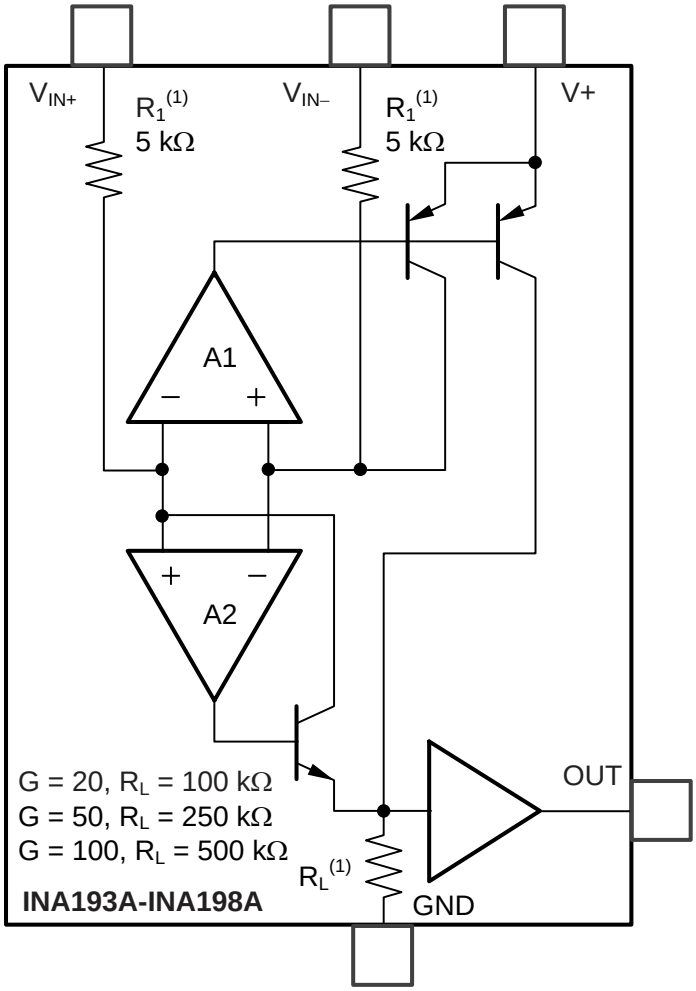

7.3 Feature Description

7.3.1 Basic Connection

Figure 20 shows the basic connection of the INA19xA. The input pins, V_{IN+} and V_{IN-}, should be connected as closely as possible to the shunt resistor to minimize any resistance in series with the shunt resistance.

Power-supply bypass capacitors are required for stability. Applications with noisy or high-impedance power supplies may require additional decoupling capacitors to reject power-supply noise. Connect bypass capacitors close to the device pins.

Copyright © 2006–2015, Texas Instruments Incorporated

Feature Description (continued)

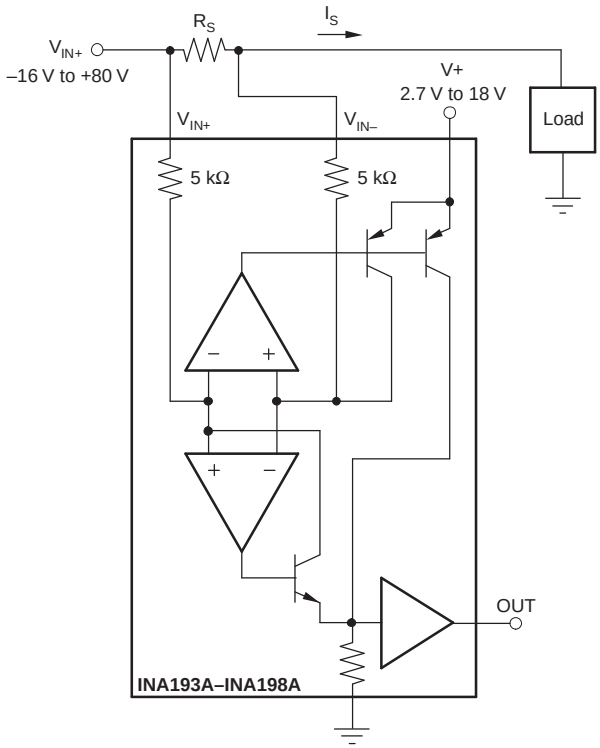

Figure 20. INA19xA Basic Connections

7.3.2 Selecting R_S

The value chosen for the shunt resistor, R_S, depends on the application and is a compromise between small-signal accuracy and maximum permissible voltage loss in the measurement line. High values of R_S provide better accuracy at lower currents by minimizing the effects of offset, while low values of R_S minimize voltage loss in the supply line. For most applications, best performance is attained with an R_S value that provides a full-scale shunt voltage range of 50 mV to 100 mV. Maximum input voltage for accurate measurements is 500 mV.

7.3.3 Inside the INA19xA

The INA19xA uses a new, unique, internal circuit topology that provides common mode range extending from –16 V to 80 V while operating from a single power supply. The common mode rejection in a classic instrumentation amplifier approach is limited by the requirement for accurate resistor matching. By converting the induced input voltage to a current, the INA19xA provides common mode rejection that is no longer a function of closely matched resistor values, providing the enhanced performance necessary for such a wide common mode range. A simplified diagram (see Figure 20) shows the basic circuit function. When the common mode voltage is positive, amplifier A2 is active.

The differential input voltage, $V_{IN+} – V_{IN–}$ applied across R_S, is converted to a current through a 5-kΩ resistor. This current is converted back to a voltage through R_L, and then amplified by the output buffer amplifier. When the common mode voltage is negative, amplifier A1 is active. The differential input voltage, $V_{IN+} – V_{IN–}$ applied across R_S, is converted to a current through a 5-kΩ resistor. This current is sourced from a precision current mirror whose output is directed into R_L, converting the signal back into a voltage and amplified by the output buffer amplifier. Patent-pending circuit architecture ensures smooth device operation, even during the transition period where both amplifiers A1 and A2 are active.

Copyright © 2006–2015, Texas Instruments Incorporated

Feature Description (continued)

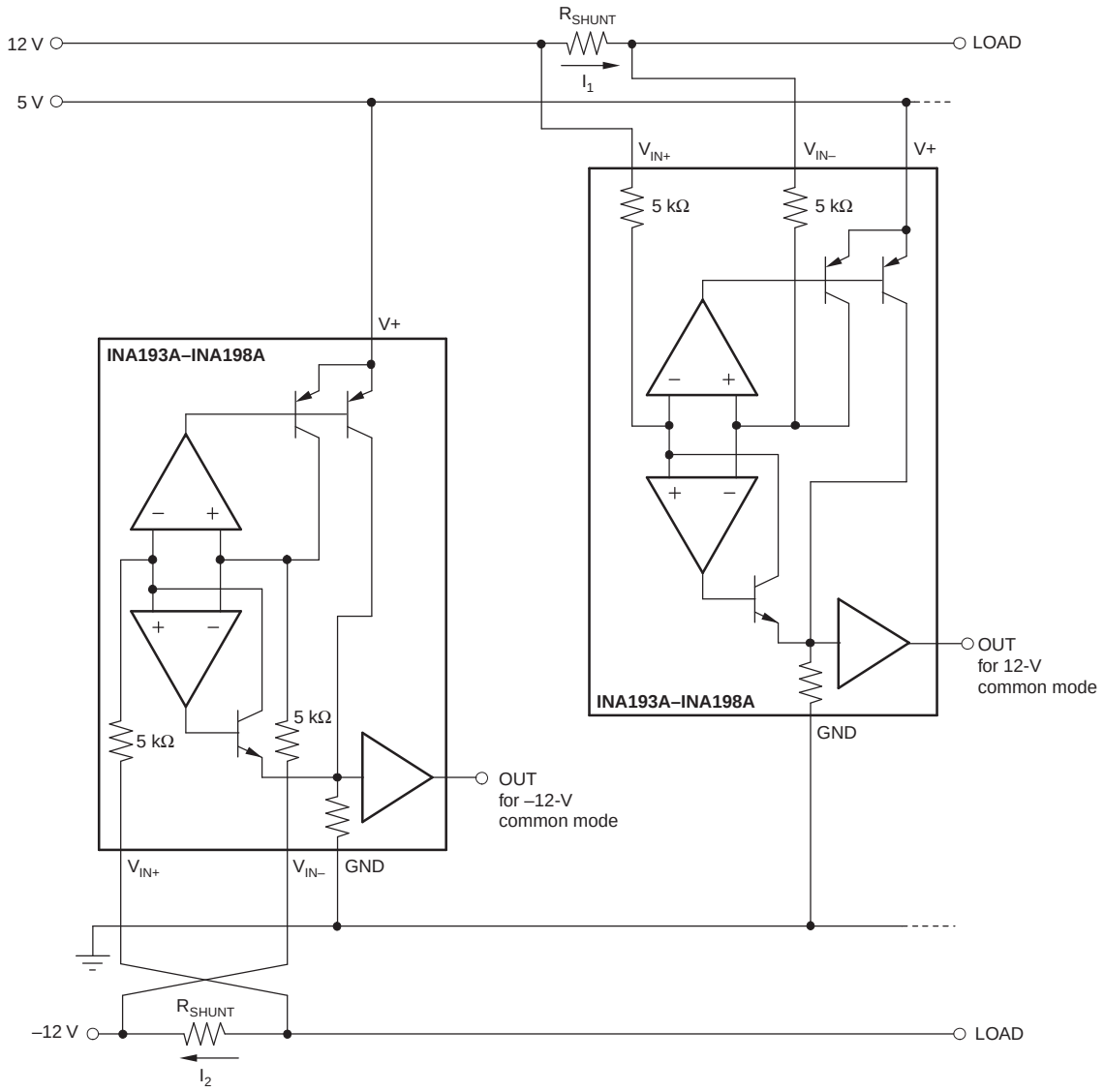

Figure 21. Monitor Bipolar Output Power-Supply Current

Feature Description (continued)

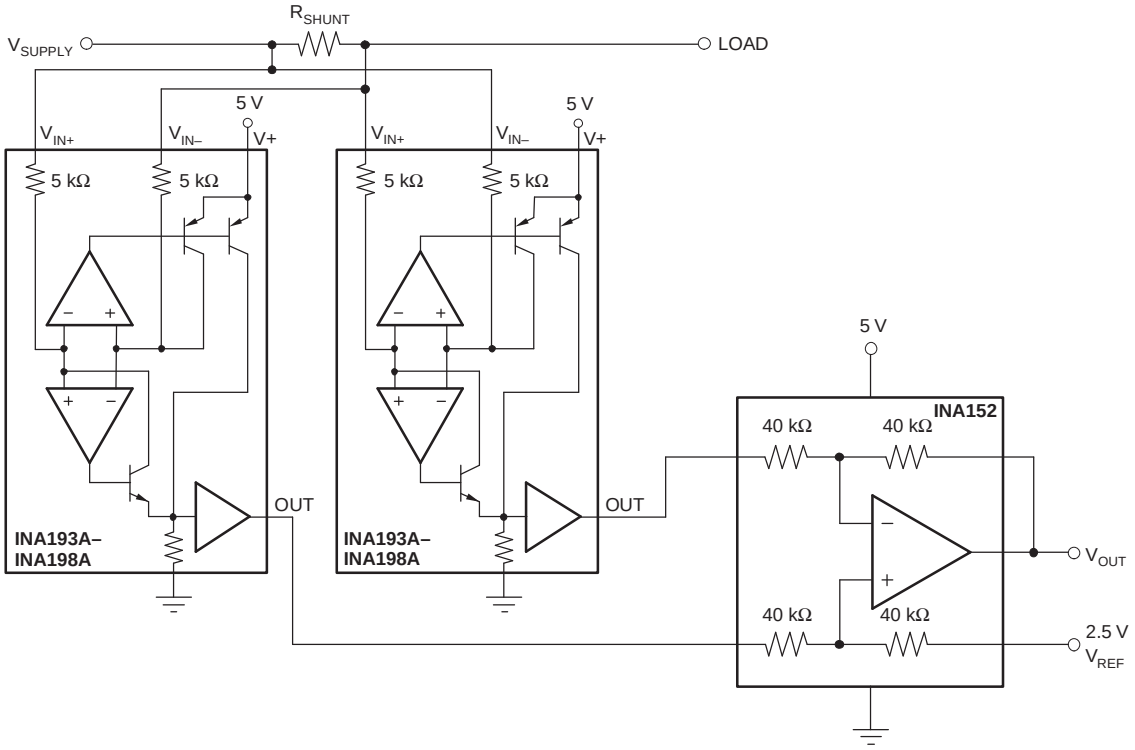

Figure 22. Bidirectional Current Monitoring

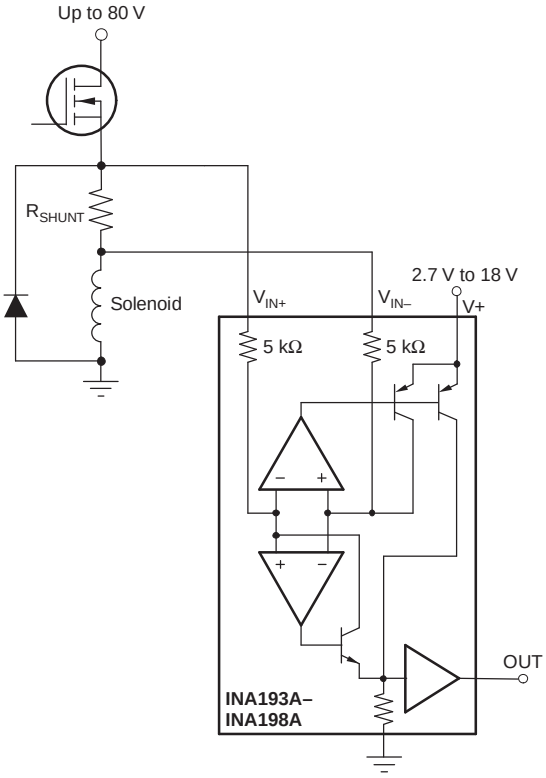

Figure 23. Inductive Current Monitor Including Flyback

Copyright © 2006–2015, Texas Instruments Incorporated

Feature Description (continued)

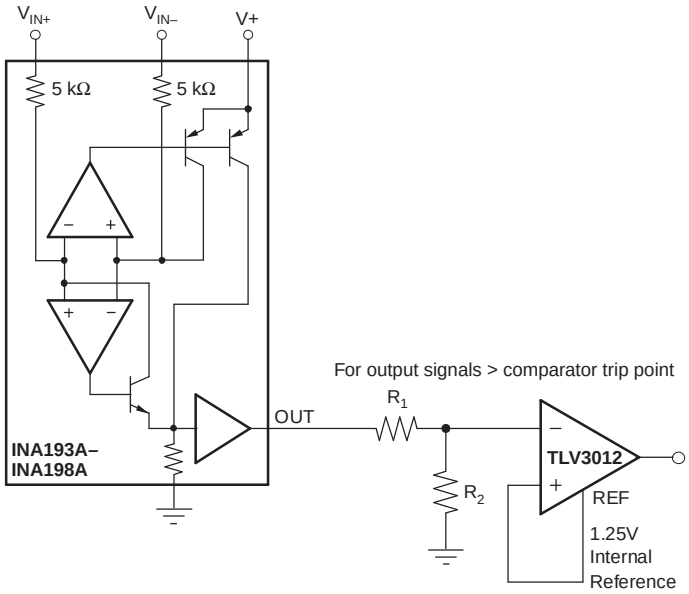

(a) INA19xA Output Adjusted by Voltage Divider

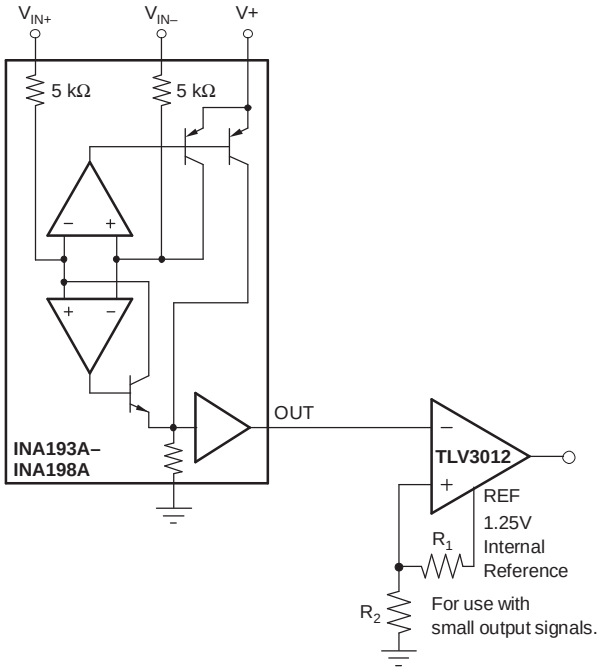

(b) Comparator Reference Voltage Adjusted by Voltage Divider

Figure 24. INA19xA With Comparator

7.3.4 Power Supply

The input circuitry of the INA19xA can accurately measure beyond its power-supply voltage, V+. For example, the V+ power supply can be 5 V, whereas the load power-supply voltage is up to 80 V. The output voltage range of the OUT terminal, however, is limited by the voltages on the power-supply pin.

Copyright © 2006–2015, Texas Instruments Incorporated

7.4 Device Functional Modes

7.4.1 Input Filtering

An obvious and straightforward location for filtering is at the output of the INA19xA series; however, this location negates the advantage of the low output impedance of the internal buffer. The only other option for filtering is at the input pins of the INA19xA, which is complicated by the internal 5-kΩ ± 30% input impedance (see Figure 25). Using the lowest possible resistor values minimizes both the initial shift in gain and effects of tolerance. The effect on initial gain is given by:

$$\text{Gain Error \%} = 100 - \left(100 \times \frac{5\ \text{k}\Omega}{5\ \text{k}\Omega + R_{FILT}}\right) \tag{1}$$

Total effect on gain error can be calculated by replacing the 5-kΩ term with 5 kΩ – 30% (or 3.5 kΩ) or 5 kΩ + 30% (or 6.5 kΩ). The tolerance extremes of R_{FILT} can also be inserted into the equation. If a pair of 100-Ω 1% resistors are used on the inputs, the initial gain error is 1.96%. Worst-case tolerance conditions always occur at the lower excursion of the internal 5-kΩ resistor (3.5 kΩ), and the higher excursion of R_{FILT}, 3% in this case.

The specified accuracy of the INA19xA must then be combined in addition to these tolerances. While this discussion treats accuracy worst-case conditions by combining the extremes of the resistor values, it is appropriate to use geometric mean or root sum square calculations to total the effects of accuracy variations.

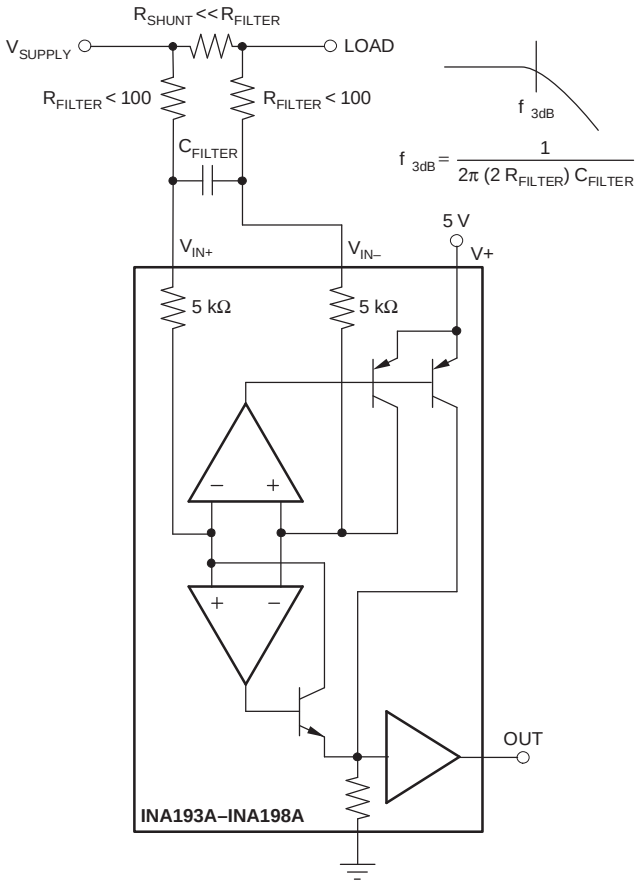

Figure 25. Input Filter (Gain Error = 1.5% to –2.2%)

7.4.2 Accuracy Variations as a Result Of V_{SENSE} and Common Mode Voltage

The accuracy of the INA19xA-Q1 current shunt monitors is a function of two main variables: V_{SENSE} ($V_{IN+} - V_{IN-}$) and common mode voltage, V_{CM}, relative to the supply voltage, V_S. V_{CM} is expressed as $(V_{IN+} + V_{IN-})/2$; however, in practice, V_{CM} is seen as the voltage at V_{IN+} because the voltage drop across V_{SENSE} is usually small.

Copyright © 2006–2015, Texas Instruments Incorporated

Device Functional Modes (continued)

This section addresses the accuracy of these specific operating regions:

Normal Case 1:	$V_{SENSE} \geq 20$ mV, $V_{CM} \geq V_S$
Normal Case 2:	$V_{SENSE} \geq 20$ mV, $V_{CM} < V_S$
Low V_{SENSE} Case 1:	$V_{SENSE} < 20$ mV, -16 V $\leq V_{CM} < 0$
Low V_{SENSE} Case 2:	$V_{SENSE} < 20$ mV, 0 V $\leq V_{CM} \leq V_S$
Low V_{SENSE} Case 3:	$V_{SENSE} < 20$ mV, $V_S < V_{CM} \leq 80$ V

7.4.2.1 Normal Case 1: $V_{SENSE} \geq 20$ mV, $V_{CM} \geq V_S$

This region of operation provides the highest accuracy. Here, the input offset voltage is characterized and measured using a two-step method. First, the gain is determined by (Equation 2).

$$G = \frac{V_{OUT1} - V_{OUT2}}{100\text{ mV} - 20\text{ mV}}$$

where

- V_{OUT1} = Output voltage with V_{SENSE} = 100 mV
- V_{OUT2} = Output voltage with V_{SENSE} = 20 mV (2)

The offset voltage is then measured at V_{SENSE} = 100 mV and referred to the input (RTI) of the current shunt monitor, as shown in (Equation 3).

$$V_{OS}\text{RTI (Referred} - \text{To} - \text{Input)} = \left(\frac{\text{VOUT1}}{G}\right) - 100\text{ mV} \quad (3)$$

In the *Typical Characteristics*, the *Output Error vs Common Mode Voltage* curve shows the highest accuracy for the this region of operation. In this plot, V_S = 12 V; for $V_{CM} \geq 12$ V, the output error is at its minimum. This case is also used to create the $V_{SENSE} \geq 20$ mV output specifications in the *Electrical Characteristics* table.

7.4.2.2 Normal Case 2: $V_{SENSE} \geq 20$ mV, $V_{CM} < V_S$

This region of operation has slightly less accuracy than Normal Case 1 as a result of the common mode operating area in which the part functions, as seen in Figure 6. As noted, for this graph V_S = 12 V; for $V_{CM} < 12$ V, the Output Error increases as V_{CM} becomes less than 12 V, with a typical maximum error of 0.005% at the most negative V_{CM} = –16 V.

7.4.2.3 Low V_{SENSE} Case 1: $V_{SENSE} < 20$ mV, -16 V $\leq V_{CM} < 0$; and Low V_{SENSE} Case 3: $V_{SENSE} < 20$ mV, $V_S < V_{CM} \leq 80$ V

Although the INA19xA-Q1 family of devices are not designed for accurate operation in either of these regions, some applications are exposed to these conditions; for example, when monitoring power supplies that are switched on and off while V_S is still applied to the INA19xA-Q1. It is important to know what the behavior of the devices will be in these regions.

As V_{SENSE} approaches 0 mV, in these V_{CM} regions, the device output accuracy degrades. A larger-than-normal offset can appear at the current shunt monitor output with a typical maximum value of V_{OUT} = 300 mV for V_{SENSE} = 0 mV. As V_{SENSE} approaches 20 mV, V_{OUT} returns to the expected output value with accuracy as specified in *Electrical Characteristics*. Figure 26 illustrates this effect using the INA195A and INA198A (Gain = 100).

Copyright © 2006–2015, Texas Instruments Incorporated

Device Functional Modes (continued)

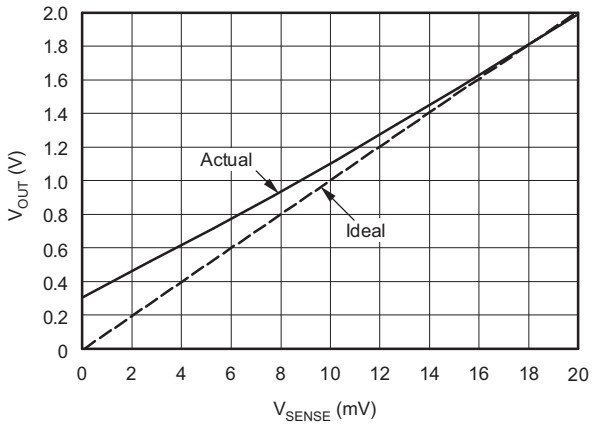

Figure 26. Example for Low V_{SENSE} Cases 1 and 3 (INA195A-Q1, INA198A-Q1: Gain = 100)

7.4.2.4 Low V_{SENSE} Case 2: V_{SENSE} < 20 mV, 0 V ≤ V_{CM} ≤ V_S

This region of operation is the least accurate for the INA19xA-Q1 family. To achieve the wide input common mode voltage range, these devices use two operational amplifier front ends in parallel. One operational amplifier front end operates in the positive input common mode voltage range, and the other in the negative input region. For this case, neither of these two internal amplifiers dominates and overall loop gain is very low. Within this region, V_{OUT} approaches voltages close to linear operation levels for Normal Case 2. This deviation from linear operation becomes greatest the closer V_{SENSE} approaches 0 V. Within this region, as V_{SENSE} approaches 20 mV, device operation is closer to that described by Normal Case 2. Figure 27 illustrates this behavior for the INA195A. The V_{OUT} maximum peak for this case is tested by maintaining a constant V_S, setting V_{SENSE} = 0 mV and sweeping V_{CM} from 0 V to V_S. The exact V_{CM} at which V_{OUT} peaks during this test varies from part to part, but the V_{OUT} maximum peak is tested to be less than the specified V_{OUT} tested limit.

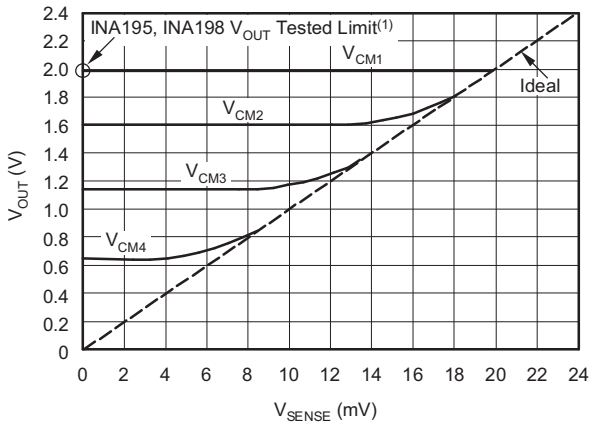

(1) INA193, INA196 V_{OUT} Tested Limit = 0.4 V
INA194, INA197 V_{OUT} Tested Limit = 1 V

NOTE: V_{OUT} tested limit at V_{SENSE} = 0 mV, 0 ≤ V_{CM1} ≤ VS.
V_{CM2}, V_{CM3}, and V_{CM4} illustrate the variance from part to part of the V_{CM} that can cause maximum V_{OUT} with V_{SENSE} < 20 mV.

Figure 27. Example for Low V_{SENSE} Case 2 (INA195A, INA198A: Gain = 100)

Copyright © 2006–2015, Texas Instruments Incorporated

Device Functional Modes (continued)

7.4.3 Shutdown

Because the INA19xA-Q1 consume a quiescent current less than 1 mA, they can be powered by either the output of logic gates or by transistor switches to supply power. Use a totem pole output buffer or gate that can provide sufficient drive along with 0.1 μF bypass capacitor, preferably ceramic with good high frequency characteristics. This gate should have a supply voltage of 3 V or greater because the INA19xA-Q1 requires a minimum supply greater than 2.7 V. In addition to eliminating quiescent current, this gate also turns off the 10 μA bias current present at each of the inputs. An example shutdown circuit is shown in Figure 28.

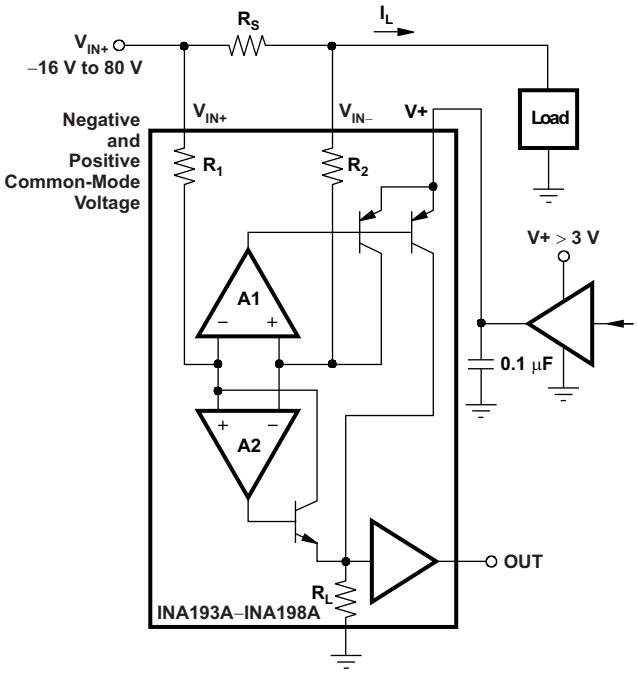

Figure 28. INA19xA-Q1 Example Shutdown Circuit

7.4.4 Transient Protection

The –16-V to 80-V common mode range of the INA19xA is ideal for withstanding automotive fault conditions ranging from 12-V battery reversal up to 80-V transients, because no additional protective components are needed up to those levels. In the event that the INA19xA is exposed to transients on the inputs in excess of its ratings, then external transient absorption with semiconductor transient absorbers (zeners or Transzorbs) are necessary. TI does not recommend using MOVs or VDRs except when they are used in addition to a semiconductor transient absorber. Select the transient absorber such that it never allows the INA19xA to be exposed to transients greater than 80 V (that is, allow for transient absorber tolerance, as well as additional voltage due to transient absorber dynamic impedance). Despite the use of internal zener-type ESD protection, the INA19xA does not lend itself to using external resistors in series with the inputs because the internal gain resistors can vary up to ±30%. (If gain accuracy is not important, then resistors can be added in series with the INA19xA inputs with two equal resistors on each input.)

7.4.5 Output Voltage Range

The output of the INA19xA is accurate within the output voltage swing range set by the power supply pin, V+. This is best illustrated when using the INA195A or INA198A (which are both versions using a gain of 100), where a 100-mV full-scale input from the shunt resistor requires an output voltage swing of 10 V, and a power-supply voltage sufficient to achieve 10 V on the output.

Copyright © 2006–2015, Texas Instruments Incorporated

8 Application and Implementation

NOTE

Information in the following applications sections is not part of the TI component specification, and TI does not warrant its accuracy or completeness. TI's customers are responsible for determining suitability of components for their purposes. Customers should validate and test their design implementation to confirm system functionality.

8.1 Application Information

The INA193A-INA198A devices measure the voltage developed across a current-sensing resistor when current passes through it. The ability to have shunt common mode voltages from −16-V to 80-V drive and control the output signal with Vs offers multiple configurations, as discussed throughout this section.

8.2 Typical Application

The device is a unidirectional, current-sense amplifier capable of measuring currents through a resistive shunt with shunt common mode voltages from −16 V to 80 V. Two devices can be configured for bidirectional monitoring and is common in applications that include charging and discharging operations where the current flow-through resistor can change directions.

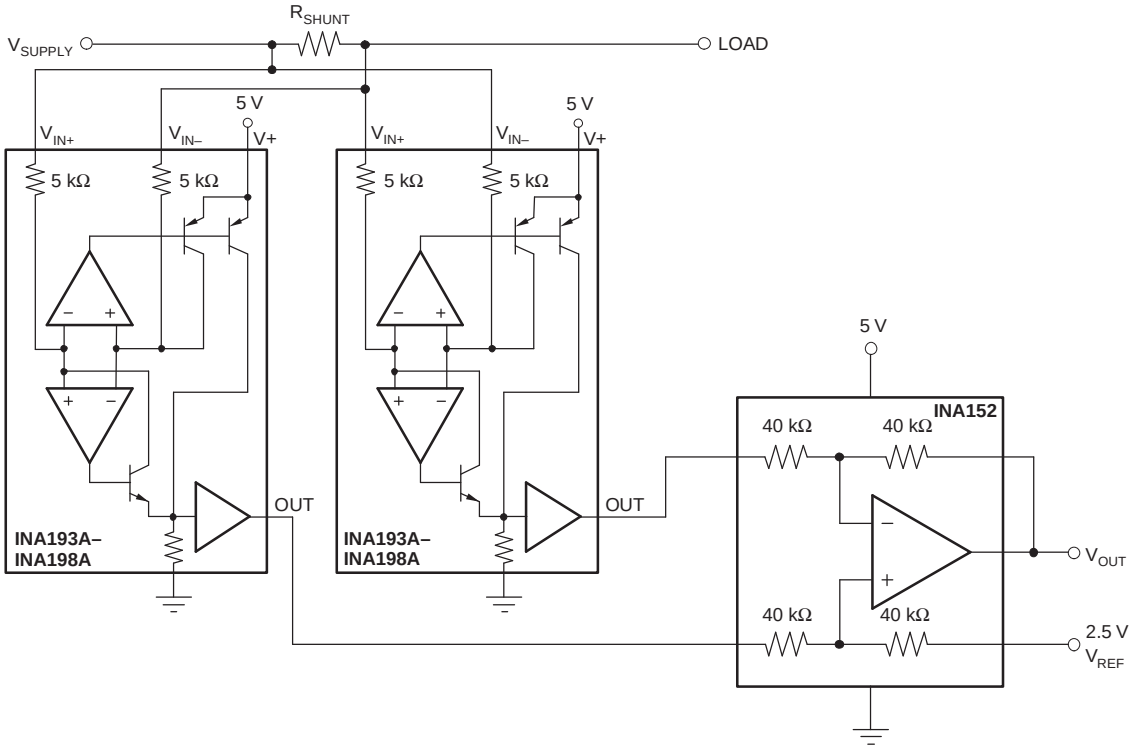

Figure 29. Bidirectional Current Monitoring

8.2.1 Design Requirements

Vsupply is set to 12 V, Vref at 2.5 V and a 10-mΩ shunt. The accuracy of the current will typically be less than 0.5% for current greater than ±2 A. For current lower than ±2 A, the accuracy will vary; use the *Accuracy Variations as a Result Of V_{SENSE} and Common Mode Voltage* section for accuracy considerations.

Copyright © 2006–2015, Texas Instruments Incorporated

Typical Application (continued)

8.2.2 Detailed Design Procedure

The ability to measure this current flowing in both directions is enabled by adding a unity gain amplifier with a V_{REF}, as shown in Figure 29. The output then responds by increasing above VREF for positive differential signals (relative to the IN – pin) and responds by decreasing below VREF for negative differential signals. This reference voltage applied to the REF pin can be set anywhere from 0 V to V+. For bidirectional applications, VREF is typically set at mid- scale for equal signal range in both current directions. In some cases, however, VREF is set at a voltage other than mid-scale when the bidirectional current and corresponding output signal are not required to be symmetrical.

8.2.3 Application Curve

An example output response of a bidirectional configuration is shown in Figure 30. With the REF pin connected to a reference voltage, 2.5 V in this case, the output voltage is biased upwards by this reference level. The output rises above the reference voltage for positive differential input signals and falls below the reference voltage for negative differential input signals.

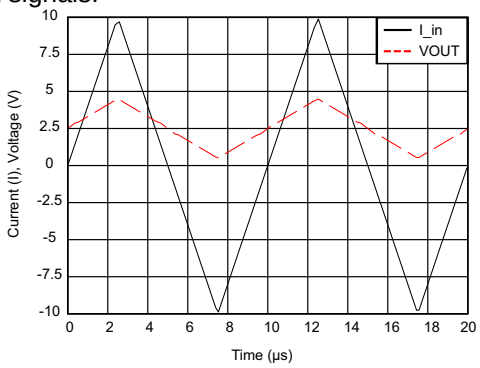

Figure 30. Output Voltage vs Shunt Input Current

9 Power Supply Recommendations

The input circuitry of the INA193A-INA198A devices can accurately measure beyond its power-supply voltage, V+. For example, the V+ power supply can be 5 V, whereas the load power-supply voltage is up to 80 V. The output voltage range of the OUT terminal, however, is limited by the voltages on the power-supply pin.

Copyright © 2006–2015, Texas Instruments Incorporated

10 Layout

10.1 Layout Guidelines

10.1.1 RFI/EMI

TI always recommends adhering to good layout practices. Keep traces short and, when possible, use a printed-circuit-board (PCB) ground plane with surface-mount components placed as close to the device pins as possible. Small ceramic capacitors placed directly across amplifier inputs can reduce RFI/EMI sensitivity. PCB layout should locate the amplifier as far away as possible from RFI sources. Sources can include other components in the same system as the amplifier itself, such as inductors (particularly switched inductors handling a lot of current and at high frequencies). RFI can generally be identified as a variation in offset voltage or dc signal levels with changes in the interfering RF signal. If the amplifier cannot be located away from sources of radiation, shielding may be needed. Twisting wire input leads makes them more resistant to RF fields. The difference in input pin location of the INA193A–INA195A versus the INA196A–INA198A may provide different EMI performance.

10.2 Layout Example

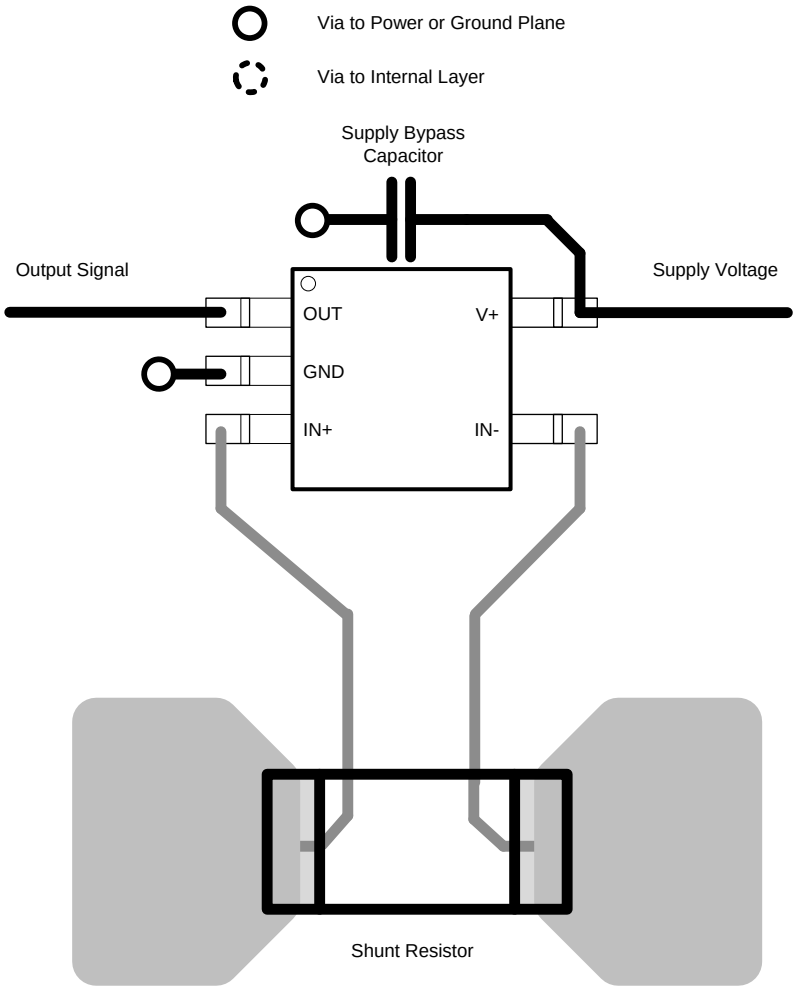

Figure 31. Recommended Layout

版权 © 2006–2015, Texas Instruments Incorporated

11 器件和文档支持

11.1 相关链接

下面的表格中列出了快速访问链接。范围包括技术文档、支持和社区资源、工具和软件，以及样片或购买的快速访问。

表 **1.** 相关链接

器件	产品文件夹	样片与购买	技术文档	工具与软件	支持与社区
INA193A-Q1	请单击此处	请单击此处	请单击此处	请单击此处	请单击此处
INA194A-Q1	请单击此处	请单击此处	请单击此处	请单击此处	请单击此处
INA195A-Q1	请单击此处	请单击此处	请单击此处	请单击此处	请单击此处
INA196A-Q1	请单击此处	请单击此处	请单击此处	请单击此处	请单击此处
INA197A-Q1	请单击此处	请单击此处	请单击此处	请单击此处	请单击此处
INA198A-Q1	请单击此处	请单击此处	请单击此处	请单击此处	请单击此处

11.2 社区资源

The following links connect to TI community resources. Linked contents are provided "AS IS" by the respective contributors. They do not constitute TI specifications and do not necessarily reflect TI's views; see TI's Terms of Use.

TI E2E™ Online Community ***TI's Engineer-to-Engineer (E2E) Community.*** Created to foster collaboration among engineers. At e2e.ti.com, you can ask questions, share knowledge, explore ideas and help solve problems with fellow engineers.

Design Support ***TI's Design Support*** Quickly find helpful E2E forums along with design support tools and contact information for technical support.

11.3 商标

E2E is a trademark of Texas Instruments.
All other trademarks are the property of their respective owners.

11.4 静电放电警告

这些装置包含有限的内置 ESD 保护。 存储或装卸时，应将导线一起截短或将装置放置于导电泡棉中，以防止 MOS 门极遭受静电损伤。

11.5 Glossary

SLYZ022 — *TI Glossary*.

This glossary lists and explains terms, acronyms, and definitions.

12 机械、封装和可订购信息

以下页中包括机械、封装和可订购信息。这些信息是针对指定器件可提供的最新数据。这些数据会在无通知且不对本文档进行修订的情况下发生改变。欲获得该数据表的浏览器版本，请查阅左侧的导航栏。

PACKAGING INFORMATION

Orderable Device	Status (1)	Package Type	Package Drawing	Pins	Package Qty	Eco Plan (2)	Lead finish/ Ball material (6)	MSL Peak Temp (3)	Op Temp (°C)	Device Marking (4/5)	Samples
INA193AQDBVRQ1	ACTIVE	SOT-23	DBV	5	3000	RoHS & Green	NIPDAU	Level-2-260C-1 YEAR	-40 to 125	BOG	Samples
INA194AQDBVRQ1	ACTIVE	SOT-23	DBV	5	3000	RoHS & Green	NIPDAU	Level-2-260C-1 YEAR	-40 to 125	BOH	Samples
INA195AQDBVRQ1	ACTIVE	SOT-23	DBV	5	3000	RoHS & Green	NIPDAU	Level-2-260C-1 YEAR	-40 to 125	BOI	Samples
INA196AQDBVRQ1	ACTIVE	SOT-23	DBV	5	3000	RoHS & Green	NIPDAU	Level-2-260C-1 YEAR	-40 to 125	BOJ	Samples
INA197AQDBVRQ1	ACTIVE	SOT-23	DBV	5	3000	RoHS & Green	NIPDAU	Level-2-260C-1 YEAR	-40 to 125	BOK	Samples
INA198AQDBVRQ1	ACTIVE	SOT-23	DBV	5	3000	RoHS & Green	NIPDAU	Level-2-260C-1 YEAR	-40 to 125	BOL	Samples

(1) The marketing status values are defined as follows:
ACTIVE: Product device recommended for new designs.
LIFEBUY: TI has announced that the device will be discontinued, and a lifetime-buy period is in effect.
NRND: Not recommended for new designs. Device is in production to support existing customers, but TI does not recommend using this part in a new design.
PREVIEW: Device has been announced but is not in production. Samples may or may not be available.
OBSOLETE: TI has discontinued the production of the device.

(2) **RoHS:** TI defines "RoHS" to mean semiconductor products that are compliant with the current EU RoHS requirements for all 10 RoHS substances, including the requirement that RoHS substance do not exceed 0.1% by weight in homogeneous materials. Where designed to be soldered at high temperatures, "RoHS" products are suitable for use in specified lead-free processes. TI may reference these types of products as "Pb-Free".
RoHS Exempt: TI defines "RoHS Exempt" to mean products that contain lead but are compliant with EU RoHS pursuant to a specific EU RoHS exemption.
Green: TI defines "Green" to mean the content of Chlorine (Cl) and Bromine (Br) based flame retardants meet JS709B low halogen requirements of <=1000ppm threshold. Antimony trioxide based flame retardants must also meet the <=1000ppm threshold requirement.

(3) MSL, Peak Temp. - The Moisture Sensitivity Level rating according to the JEDEC industry standard classifications, and peak solder temperature.

(4) There may be additional marking, which relates to the logo, the lot trace code information, or the environmental category on the device.

(5) Multiple Device Markings will be inside parentheses. Only one Device Marking contained in parentheses and separated by a "~" will appear on a device. If a line is indented then it is a continuation of the previous line and the two combined represent the entire Device Marking for that device.

(6) Lead finish/Ball material - Orderable Devices may have multiple material finish options. Finish options are separated by a vertical ruled line. Lead finish/Ball material values may wrap to two lines if the finish value exceeds the maximum column width.

Important Information and Disclaimer: The information provided on this page represents TI's knowledge and belief as of the date that it is provided. TI bases its knowledge and belief on information provided by third parties, and makes no representation or warranty as to the accuracy of such information. Efforts are underway to better integrate information from third parties. TI has taken and continues to take reasonable steps to provide representative and accurate information but may not have conducted destructive testing or chemical analysis on incoming materials and chemicals. TI and TI suppliers consider certain information to be proprietary, and thus CAS numbers and other limited information may not be available for release.

In no event shall TI's liability arising out of such information exceed the total purchase price of the TI part(s) at issue in this document sold by TI to Customer on an annual basis.

TAPE AND REEL INFORMATION

REEL DIMENSIONS

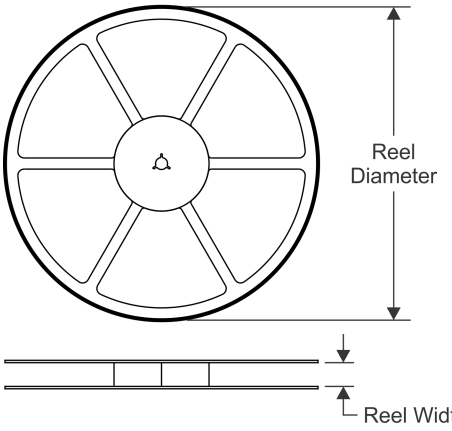

TAPE DIMENSIONS

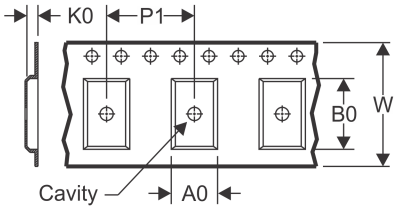

A0	Dimension designed to accommodate the component width
B0	Dimension designed to accommodate the component length
K0	Dimension designed to accommodate the component thickness
W	Overall width of the carrier tape
P1	Pitch between successive cavity centers

QUADRANT ASSIGNMENTS FOR PIN 1 ORIENTATION IN TAPE

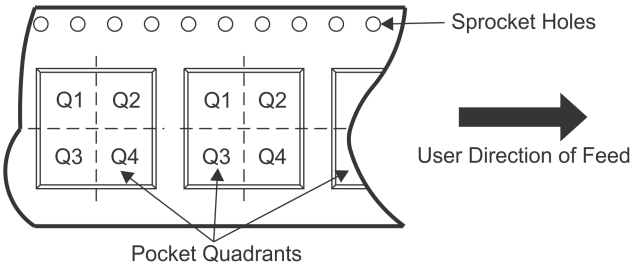

*All dimensions are nominal

Device	Package Type	Package Drawing	Pins	SPQ	Reel Diameter (mm)	Reel Width W1 (mm)	A0 (mm)	B0 (mm)	K0 (mm)	P1 (mm)	W (mm)	Pin1 Quadrant
INA193AQDBVRQ1	SOT-23	DBV	5	3000	178.0	9.0	3.3	3.2	1.4	4.0	8.0	Q3
INA194AQDBVRQ1	SOT-23	DBV	5	3000	178.0	9.0	3.3	3.2	1.4	4.0	8.0	Q3
INA195AQDBVRQ1	SOT-23	DBV	5	3000	178.0	9.0	3.3	3.2	1.4	4.0	8.0	Q3
INA196AQDBVRQ1	SOT-23	DBV	5	3000	178.0	9.0	3.3	3.2	1.4	4.0	8.0	Q3
INA197AQDBVRQ1	SOT-23	DBV	5	3000	178.0	9.0	3.3	3.2	1.4	4.0	8.0	Q3
INA198AQDBVRQ1	SOT-23	DBV	5	3000	178.0	9.0	3.3	3.2	1.4	4.0	8.0	Q3

TAPE AND REEL BOX DIMENSIONS

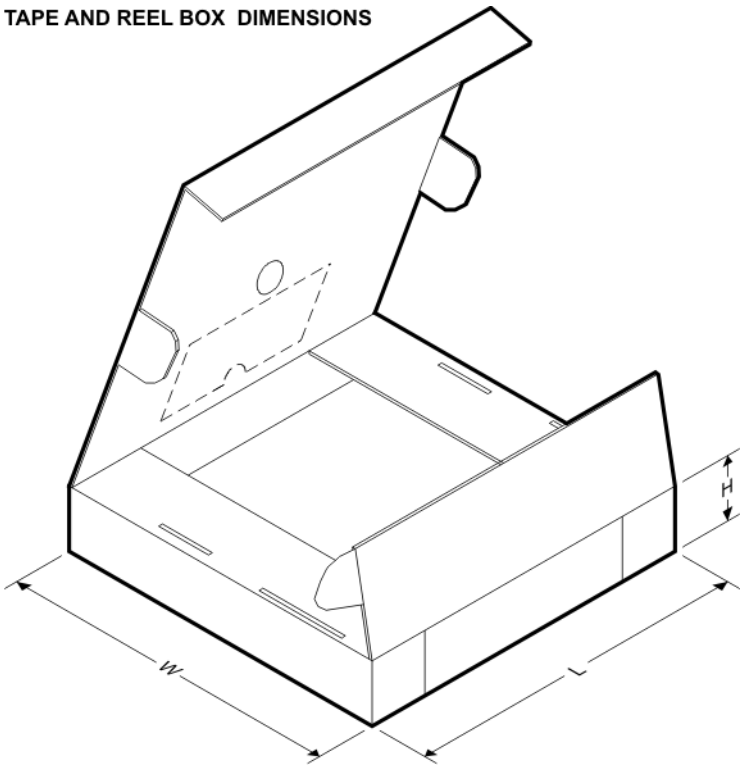

*All dimensions are nominal

Device	Package Type	Package Drawing	Pins	SPQ	Length (mm)	Width (mm)	Height (mm)
INA193AQDBVRQ1	SOT-23	DBV	5	3000	190.0	190.0	30.0
INA194AQDBVRQ1	SOT-23	DBV	5	3000	190.0	190.0	30.0
INA195AQDBVRQ1	SOT-23	DBV	5	3000	190.0	190.0	30.0
INA196AQDBVRQ1	SOT-23	DBV	5	3000	190.0	190.0	30.0
INA197AQDBVRQ1	SOT-23	DBV	5	3000	190.0	190.0	30.0
INA198AQDBVRQ1	SOT-23	DBV	5	3000	190.0	190.0	30.0

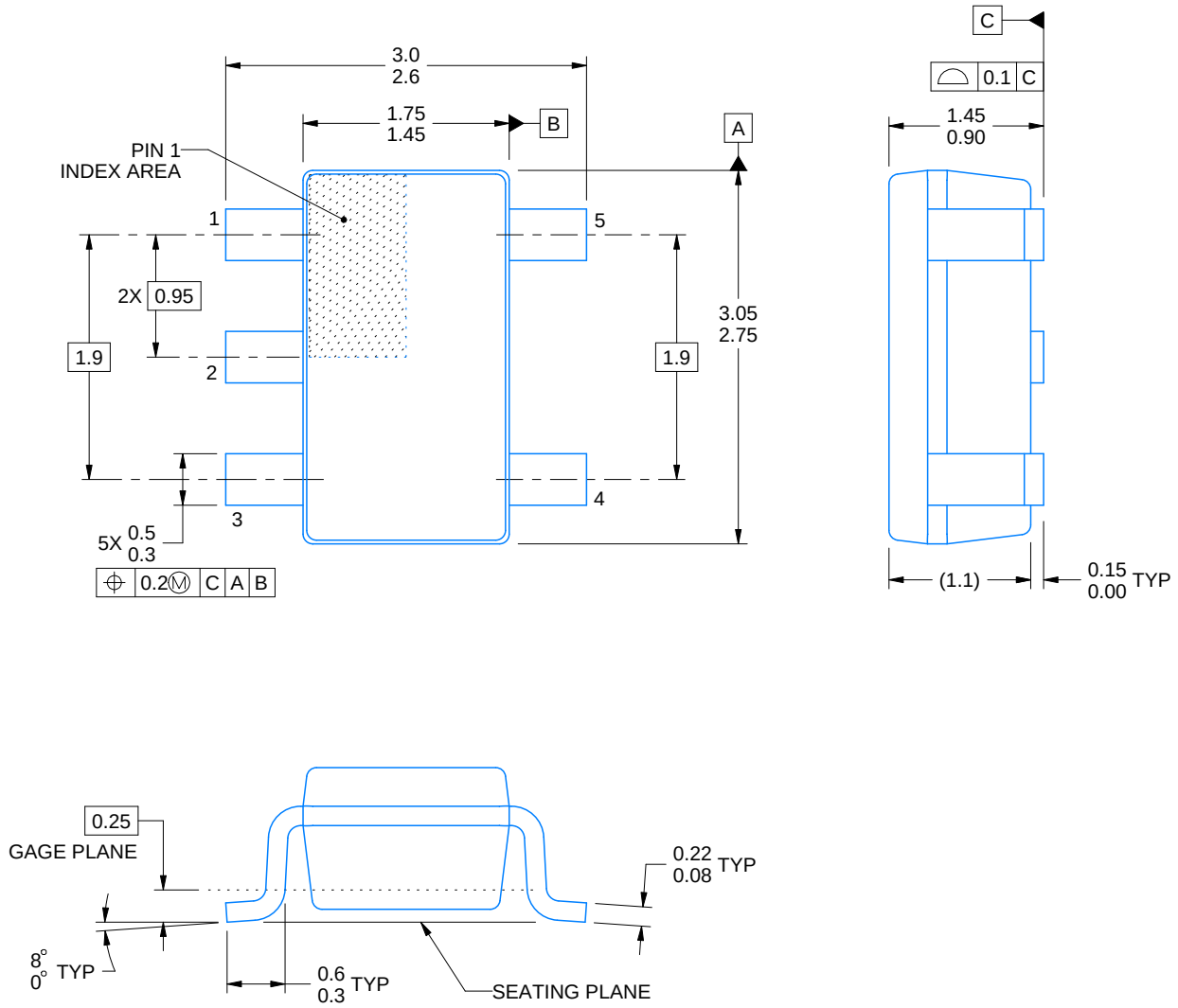

4214839/F 06/2021

NOTES:

1. All linear dimensions are in millimeters. Any dimensions in parenthesis are for reference only. Dimensioning and tolerancing per ASME Y14.5M.
2. This drawing is subject to change without notice.
3. Refernce JEDEC MO-178.
4. Body dimensions do not include mold flash, protrusions, or gate burrs. Mold flash, protrusions, or gate burrs shall not exceed 0.25 mm per side.

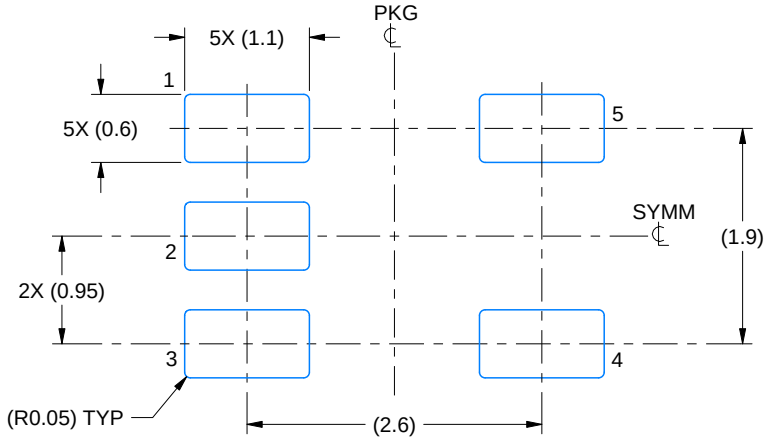

LAND PATTERN EXAMPLE
EXPOSED METAL SHOWN
SCALE:15X

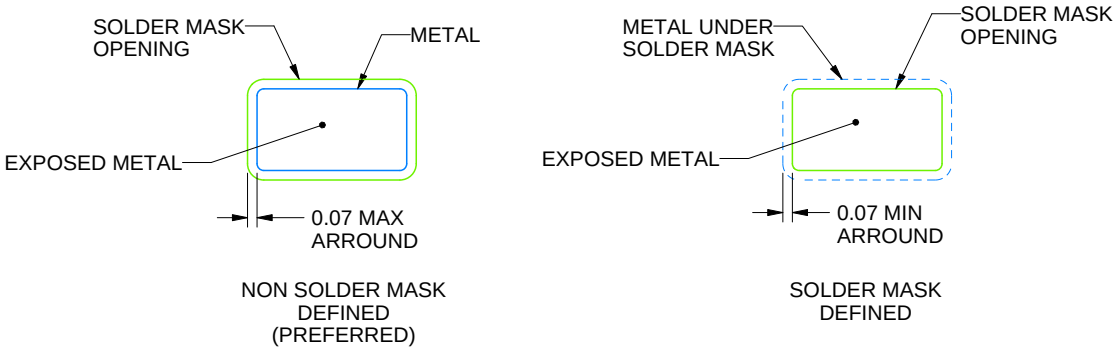

SOLDER MASK DETAILS

4214839/F 06/2021

NOTES: (continued)

5. Publication IPC-7351 may have alternate designs.
6. Solder mask tolerances between and around signal pads can vary based on board fabrication site.

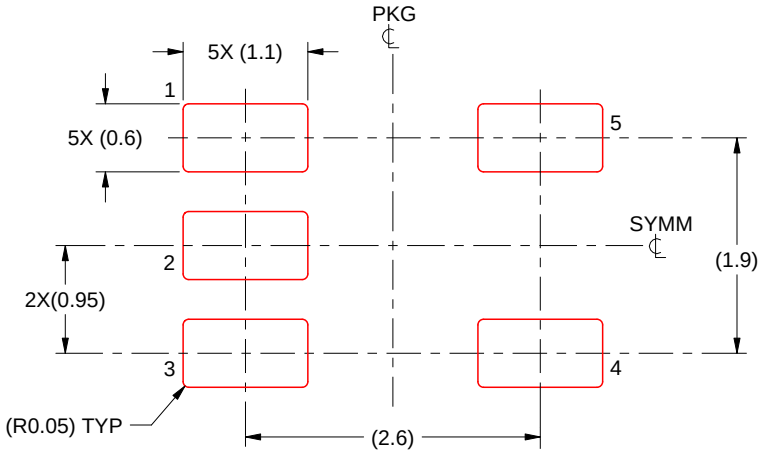

SOLDER PASTE EXAMPLE
BASED ON 0.125 mm THICK STENCIL
SCALE:15X

4214839/F 06/2021

NOTES: (continued)

7. Laser cutting apertures with trapezoidal walls and rounded corners may offer better paste release. IPC-7525 may have alternate design recommendations.
8. Board assembly site may have different recommendations for stencil design.

重要声明和免责声明

TI“按原样”提供技术和可靠性数据（包括数据表）、设计资源（包括参考设计）、应用或其他设计建议、网络工具、安全信息和其他资源，不保证没有瑕疵且不做出任何明示或暗示的担保，包括但不限于对适销性、某特定用途方面的适用性或不侵犯任何第三方知识产权的暗示担保。

这些资源可供使用 TI 产品进行设计的熟练开发人员使用。您将自行承担以下全部责任：(1) 针对您的应用选择合适的 TI 产品，(2) 设计、验证并测试您的应用，(3) 确保您的应用满足相应标准以及任何其他功能安全、信息安全、监管或其他要求。

这些资源如有变更，恕不另行通知。TI 授权您仅可将这些资源用于研发本资源所述的 TI 产品的应用。严禁对这些资源进行其他复制或展示。您无权使用任何其他 TI 知识产权或任何第三方知识产权。您应全额赔偿因在这些资源的使用中对 TI 及其代表造成的任何索赔、损害、成本、损失和债务，TI 对此概不负责。

TI 提供的产品受 TI 的销售条款或 ti.com 上其他适用条款/TI 产品随附的其他适用条款的约束。TI 提供这些资源并不会扩展或以其他方式更改 TI 针对 TI 产品发布的适用的担保或担保免责声明。

TI 反对并拒绝您可能提出的任何其他或不同的条款。

邮寄地址：Texas Instruments, Post Office Box 655303, Dallas, Texas 75265
Copyright © 2021，德州仪器 (TI) 公司