SN74AVCH1T45 Single-Bit Dual-Supply Bus Transceiver With Configurable Level-Shifting, Voltage Translation, and 3-State Outputs

1 Features

- Available in the Texas Instruments NanoStar™ and NanoFree™ Packages
- Control Inputs (DIR) V_{IH} and V_{IL} Levels Are Referenced to V_{CCA} Voltage
- Bus Hold on Data Inputs Eliminates the Need for External Pullup and Pulldown Resistors
- V_{CC} Isolation
- Fully Configurable Dual-Rail Design
- I/Os Are 4.6-V Tolerant
- I_{off} Supports Partial-Power-Down Mode Operation
- Typical Max Data Rates
  - 500 Mbps (1.8-V to 3.3-V Translation)
  - 320 Mbps (<1.8-V to 3.3-V Translation)
  - 320 Mbps (Translate to 2.5 V or 1.8 V)
  - 280 Mbps (Translate to 1.5 V)
  - 240 Mbps (Translate to 1.2 V)
- Latch-Up Performance Exceeds 100 mA Per JESD 78, Class II
- ESD Protection Exceeds JESD 22
  - Human-Body Model (A114-A): 2000 V
  - Machine Model (A115-A): 200 V
  - Charged-Device Model (C101): 1000 V

2 Applications

- Personal Electronics
- Industrial
- Enterprise
- Telecommunications

3 Description

The SN74AVCH1T45 is a single-bit noninverting bus transceiver that uses two separate configurable power-supply rails. The A port is designed to track V_{CCA}, which accepts any supply voltage from 1.2 V to 3.6 V. The B port is designed to track V_{CCB}, which also accepts any supply voltage from 1.2 V to 3.6 V. This allows for universal low-voltage bidirectional translation between any of the 1.2-V, 1.5-V, 1.8-V, 2.5-V, and 3.3-V voltage nodes.

The SN74AVCH1T45 is designed for asynchronous communication between two data buses. The device transmits data from either the A bus to the B bus, or from the B bus to the A bus, depending upon the logic level at the direction-control (DIR) input.

The SN74AVCH1T45 is designed so that the DIR input is referenced to V_{CCA}.

Device Information(1)

PART NUMBER	PACKAGE	BODY SIZE (NOM)
SN74AVCH1T45	SC70 (6)	2.00 mm × 1.25 mm
	SOT-23 (6)	2.90 mm × 1.60 mm
	DSBGA (6)	1.50 mm × 0.90 mm

(1) For all available packages, see the orderable addendum at the end of the data sheet.

Logic Diagram (Positive Logic)

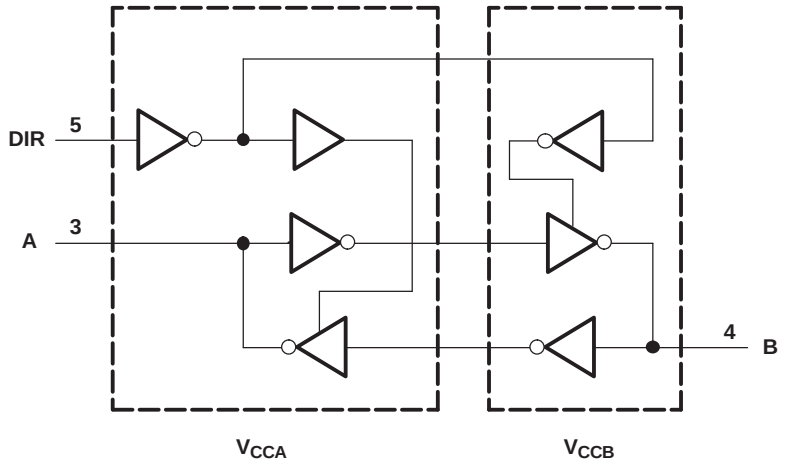

An IMPORTANT NOTICE at the end of this data sheet addresses availability, warranty, changes, use in safety-critical applications, intellectual property matters and other important disclaimers. PRODUCTION DATA.

Table of Contents

1 Features ... 1
2 Applications ... 1
3 Description ... 1
4 Revision History ... 2
5 Description (continued) ... 3
6 Pin Configuration and Functions ... 3
7 Specifications ... 4
7.1 Absolute Maximum Ratings ... 4
7.2 ESD Ratings ... 4
7.3 Recommended Operating Conditions ... 4
7.4 Thermal Information ... 5
7.5 Electrical Characteristics ... 6
7.6 Switching Characteristics, V_{CCA}= 1.2 V ... 8
7.7 Switching Characteristics, V_{CCA}= 1.5 V ± 0.1 V ... 9
7.8 Switching Characteristics, V_{CCA}= 1.8 V ± 0.15 V ... 10
7.9 Switching Characteristics, V_{CCA}= 2.5 V ± 0.2 V ... 11
7.10 Switching Characteristics, V_{CCA}= 3.3 V ± 0.3 V ... 12
7.11 Operating Characteristics ... 13
7.12 Typical Characteristics ... 14
8 Parameter Measurement Information ... 16
9 Detailed Description ... 17
9.1 Overview ... 17
9.2 Functional Block Diagram ... 17
9.3 Feature Description ... 17
9.4 Device Functional Modes ... 18
10 Application and Implementation ... 18
10.1 Application Information ... 18
10.2 Typical Applications ... 18
11 Power Supply Recommendations ... 21
12 Layout ... 22
12.1 Layout Guidelines ... 22
12.2 Layout Example ... 22
13 Device and Documentation Support ... 23
13.1 Documentation Support ... 23
13.2 Community Resources ... 23
13.3 Trademarks ... 23
13.4 Electrostatic Discharge Caution ... 23
13.5 Glossary ... 23
14 Mechanical, Packaging, and Orderable Information ... 23

4 Revision History

NOTE: Page numbers for previous revisions may differ from page numbers in the current version.

Changes from Revision D (January 2008) to Revision E	Page
• Added *ESD Ratings* table, *Feature Description* section, *Device Functional Modes*, *Application and Implementation* section, *Power Supply Recommendations* section, *Layout* section, *Device and Documentation Support* section, and *Mechanical, Packaging, and Orderable Information* section.	1

Copyright © 2004–2016, Texas Instruments Incorporated

5 Description (continued)

Active bus-hold circuitry holds unused or undriven inputs at a valid logic state. Use of pullup or pulldown resistors with the bus-hold circuitry is not recommended.

This device is fully specified for partial-power-down applications using I_{off}. The I_{off} circuitry disables the outputs, preventing damaging current backflow through the device.

The V_{CC} isolation feature ensures that if either V_{CCA} or V_{CCB} is at GND, then the outputs are in the high-impedance state. The bus-hold circuitry on the powered-up side always stays active.

NanoFree package technology is a major breakthrough in IC packaging concepts, using the die as the package.

6 Pin Configuration and Functions

DBV or DCK Package
6-Pin SOT-23 or SC70
Top View

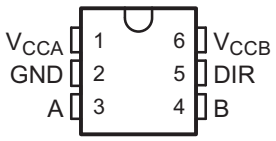

YZP Package
6-Pin DSBGA
Bottom View

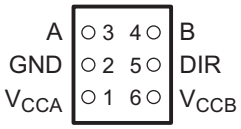

Pin Functions

PIN		I/O	DESCRIPTION
NAME	NO.		
A	3	I/O	Input/output A. Referenced to V_{CCA}.
B	4	I/O	Input/output B. Referenced to V_{CCB}.
DIR	5	I	Direction control signal. Referenced to V_{CCA}.
V_{CCA}	1	—	A-port supply voltage. 1.2 V ≤ V_{CCA} ≤ 3.6 V
V_{CCB}	6	—	B-port supply voltage. 1.2 V ≤ V_{CCB} ≤ 3.6 V.
GND	2	—	Ground

Copyright © 2004–2016, Texas Instruments Incorporated

7 Specifications

7.1 Absolute Maximum Ratings

over operating free-air temperature range (unless otherwise noted)[1]

		MIN	MAX	UNIT
Supply voltage	V_{CCA} and V_{CCB}	–0.5	4.6	V
Input voltage[2]	I/O ports (A port)	–0.5	4.6	V
	I/O ports (B port)	–0.5	4.6	
	Control inputs	–0.5	4.6	
Voltage applied to any output in the high-impedance or power-off state[2]	A port	–0.5	4.6	V
	B port	–0.5	4.6	
Voltage applied to any output in the high or low state[2][3]	A port	–0.5	V_{CCA} + 0.5	V
	B port	–0.5	V_{CCB} + 0.5	
Input clamp current	$V_I < 0$		–50	mA
Output clamp current	$V_O < 0$		–50	mA
Continuous output current			±50	mA
Continuous through current	V_{CCA}, V_{CCB}, or GND		±100	mA
Junction temperature, T_J		–40	150	°C
Storage temperature, T_{stg}		–65	150	°C

(1) Stresses beyond those listed under *Absolute Maximum Ratings* may cause permanent damage to the device. These are stress ratings only, which do not imply functional operation of the device at these or any other conditions beyond those indicated under *Recommended Operating Conditions*. Exposure to absolute-maximum-rated conditions for extended periods may affect device reliability.
(2) The input voltage and output negative-voltage ratings may be exceeded if the input and output current ratings are observed.
(3) The output positive-voltage rating may be exceeded up to 4.6 V maximum if the output current rating is observed.

7.2 ESD Ratings

			VALUE	UNIT
$V_{(ESD)}$	Electrostatic discharge	Human-body model (HBM), per ANSI/ESDA/JEDEC JS-001[1]	±2000	V
		Charged-device model (CDM), per JEDEC specification JESD22-C101[2]	±1000	
		Machine model, per A115-A	±200	

(1) JEDEC document JEP155 states that 500-V HBM allows safe manufacturing with a standard ESD control process.
(2) JEDEC document JEP157 states that 250-V CDM allows safe manufacturing with a standard ESD control process.

7.3 Recommended Operating Conditions

see [1][2][3][4][5]

				MIN	MAX	UNIT
V_{CCA}	Supply voltage			1.2	3.6	V
V_{CCB}	Supply voltage			1.2	3.6	V
V_{IH}	High-level input voltage[1]	Data inputs[4]	V_{CCI} = 1.2 V to 1.95 V	V_{CCI} × 0.65		V
			V_{CCI} = 1.95 V to 2.7 V	1.6		
			V_{CCI} = 2.7 V to 3.6 V	2		
V_{IL}	Low-level input voltage[1]	Data inputs[4]	V_{CCI} = 1.2 V to 1.95 V		V_{CCI} × 0.35	V
			V_{CCI} = 1.95 V to 2.7 V		0.7	
			V_{CCI} = 2.7 V to 3.6 V		0.8	
V_{IH}	High-level input voltage	DIR (referenced to V_{CCA})[5]	V_{CCI} = 1.2 V to 1.95 V	V_{CCA} × 0.65		V
			V_{CCI} = 1.95 V to 2.7 V	1.6		
			V_{CCI} = 2.7 V to 3.6 V	2		

(1) V_{CCI} is the V_{CC} associated with the input port.
(2) V_{CCO} is the V_{CC} associated with the output port.
(3) All unused control inputs of the device must be held at V_{CCI} or GND to ensure proper device operation.
(4) For V_{CCI} values not specified in the data sheet, V_{IH} min = V_{CCI} × 0.7 V, V_{IL} max = V_{CCI} × 0.3 V.
(5) For V_{CCI} values not specified in the data sheet, V_{IH} min = V_{CCA} × 0.7 V, V_{IL} max = V_{CCA} × 0.3 V.

Copyright © 2004–2016, Texas Instruments Incorporated

Recommended Operating Conditions (continued)

see (1)(2)(3)(4)(5)

				MIN	MAX	UNIT
V_{IL}	Low-level input voltage	DIR (referenced to V_{CCA})(5)	V_{CCI} = 1.2 V to 1.95 V		V_{CCA} × 0.35	V
			V_{CCI} = 1.95 V to 2.7 V		0.7	
			V_{CCI} = 2.7 V to 3.6 V		0.8	
V_I	Input voltage	Control Inputs(3)		0	3.6	V
V_O	Output voltage(2)	Active state		0	V_{CCO}	V
		3-state		0	3.6	
I_{OH}	High-level output current		V_{CCO} = 1.2 V		–3	mA
			V_{CCO} = 1.4 V to 1.6 V		–6	
			V_{CCO} = 1.65 V to 1.95 V		–8	
			V_{CCO} = 2.3 V to 2.7 V		–9	
			V_{CCO} = 3 V to 3.6 V		–12	
I_{OL}	Low-level output current		V_{CCO} = 1.2 V		3	mA
			V_{CCO} = 1.4 V to 1.6 V		6	
			V_{CCO} = 1.65 V to 1.95 V		8	
			V_{CCO} = 2.3 V to 2.7 V		9	
			V_{CCO} = 3 V to 3.6 V		12	
Δt/Δv	Input transition rise or fall rate				5	ns/V
T_A	Operating free-air temperature			–40	85	°C

7.4 Thermal Information

THERMAL METRIC(1)		SN74AVCH1T45			UNIT
		DBV (SOT-23)	DCK (SC70)	YZP (DSBGA)	
		6 PINS	6 PINS	6 PINS	
$R_{\theta JA}$	Junction-to-ambient thermal resistance(2)	24.3	290.7	130	°C/W
$R_{\theta JC(top)}$	Junction-to-case (top) thermal resistance	174.7	97	54	°C/W
$R_{\theta JB}$	Junction-to-board thermal resistance	92.4	99.2	51	°C/W
ψ_{JT}	Junction-to-top characterization parameter	61.1	2.1	1	°C/W
ψ_{JB}	Junction-to-board characterization parameter	92	98.4	50	°C/W

(1) For more information about traditional and new thermal metrics, see the *Semiconductor and IC Package Thermal Metrics* application report, SPRA953.
(2) The package thermal impedance is calculated in accordance with JESD 51-7.

Copyright © 2004–2016, Texas Instruments Incorporated

7.5 Electrical Characteristics

All typical limits apply over T_A = 25°C, and all maximum and minimum limits apply over T_A = –40°C to 85°C (unless otherwise noted).[(1)(2)(3)(4)]

PARAMETER		TEST CONDITIONS			MIN	TYP	MAX	UNIT
V_{OH}	High-level output voltage[(1)]	I_{OH} = –100 µA, V_I= V_{IH}	V_{CCA} = V_{CCB} = 1.2 V to 3.6 V		V_{CCO} - 0.2 V			V
		I_{OH} = –3 mA, V_I= V_{IH}	V_{CCA} = V_{CCB} = 1.2 V			0.95		
		I_{OH} = –6 mA, V_I= V_{IH}	V_{CCA} = V_{CCB} = 1.4 V		1.05			
		I_{OH} = –8 mA, V_I= V_{IH}	V_{CCA} = V_{CCB} = 1.65 V		1.2			
		I_{OH} = –9 mA, V_I= V_{IH}	V_{CCA} = V_{CCB} = 2.3 V		1.75			
		I_{OH} = –12 mA, V_I= V_{IH}	V_{CCA} = V_{CCB} = 3 V		2.3			
V_{OL}	Low-level output voltage	I_{OL} = 100 µA, V_I= V_{IL}	V_{CCA} = V_{CCB} = 1.2 V to 3.6 V				0.2	V
		I_{OL} = 3 mA, V_I= V_{IL}	V_{CCA} = V_{CCB} = 1.2 V			0.15		
		I_{OL} = 6 mA, V_I= V_{IL}	V_{CCA} = V_{CCB} = 1.4 V				0.35	
		I_{OL} = 8 mA, V_I= V_{IL}	V_{CCA} = V_{CCB} = 1.65 V				0.45	
		I_{OL} = 9 mA, V_I= V_{IL}	V_{CCA} = V_{CCB} = 2.3 V				0.55	
		I_{OL} = 12 mA, V_I= V_{IL}	V_{CCA} = V_{CCB} = 3 V				0.7	
I_I	Control Input (DIR)	V_I = V_{CCA} or GND	V_{CCA} = V_{CCB} = 1.2 V to 3.6 V			±0.025	±1	µA
I_{BHL}	Bus-hold low sustaining current[(5)]	V_I = 0.42 V	V_{CCA} = V_{CCB} = 1.2 V			25		µA
		V_I = 0.49 V	V_{CCA} = V_{CCB} = 1.4 V		15			
		V_I = 0.58 V	V_{CCA} = V_{CCB} = 1.65 V		25			
		V_I = 0.7 V	V_{CCA} = V_{CCB} = 2.3 V		45			
		V_I = 0.8 V	V_{CCA} = V_{CCB} = 3.3 V		100			
I_{BHH}	Bus-hold high sustaining current[(6)]	V_I = 0.78 V	V_{CCA} = V_{CCB} = 1.2 V			–25		µA
		V_I = 0.91 V	V_{CCA} = V_{CCB} = 1.4 V		–15			
		V_I = 1.07 V	V_{CCA} = V_{CCB} = 1.65 V		–25			
		V_I = 1.6 V	V_{CCA} = V_{CCB} = 2.3 V		–45			
		V_I = 2 V	V_{CCA} = V_{CCB} = 3.3 V		–100			
I_{BHLO}	Bus-hold low overdrive current[(3)]	V_I = 0 to V_{CC}	V_{CCA} = V_{CCB} = 1.2 V			50		µA
			V_{CCA} = V_{CCB} = 1.6 V		125			
			V_{CCA} = V_{CCB} = 1.95 V		200			
			V_{CCA} = V_{CCB} = 2.7 V		300			
			V_{CCA} = V_{CCB} = 3.6 V		500			
I_{BHHO}	Bus-hold high overdrive current[(4)]	V_I = 0 to V_{CC}	V_{CCA} = V_{CCB} = 1.2 V			–50		µA
			V_{CCA} = V_{CCB} = 1.6 V		–125			
			V_{CCA} = V_{CCB} = 1.95 V		–200			
			V_{CCA} = V_{CCB} = 2.7 V		–300			
			V_{CCA} = V_{CCB} = 3.6 V		–500			
I_{off}	Input and output Power-off leakge current	V_I = 0 V to 3.6 V, V_O= 0 V to 3.6 V	V_{CCA} = 0 V, V_{CCB} = 0 V to 3.6 V	A Port		±0.1	±5	µA
			V_{CCA} = 0 V to 3.6 V, V_{CCB} = 0 V	B Port		±0.1	±5	

(1) V_{CCO} is the V_{CC} associated with the output port.
(2) V_{CCI} is the V_{CC} associated with the input port.
(3) An external driver must source at least I_{BHLO} to switch this node from low to high.
(4) An external driver must sink at least I_{BHHO} to switch this node from high to low.
(5) The bus-hold circuit can sink at least the minimum low sustaining current at V_{IL} max. I_{BHL} should be measured after lowering V_{IN} to GND and then raising it to V_{IL} max.
(6) The bus-hold circuit can source at least the minimum high sustaining current at V_{IH} min. I_{BHH} should be measured after raising V_{IN} to V_{CC} and then lowering it to V_{IH} min.

Copyright © 2004–2016, Texas Instruments Incorporated

Electrical Characteristics (continued)

All typical limits apply over T_A = 25°C, and all maximum and minimum limits apply over T_A = –40°C to 85°C (unless otherwise noted).[(1)(2)(3)(4)]

PARAMETER		TEST CONDITIONS			MIN	TYP	MAX	UNIT
I_{OZ}	Off-state output current[(7)]	$V_I = V_{CCI}$ or GND, $V_O = V_{CCO}$ or GND	V_{CCA} = 0 V, V_{CCB} = 3.6 V	A Port		±0.5	±5	µA
			V_{CCA} = 3.6 V, V_{CCB} = 0 V	B port		±0.5	±5	
I_{CCA}	Supply current A port	$V_I = V_{CCI}$ or GND, I_O = 0	$V_{CCA} = V_{CCB}$ = 1.2 V to 3.6 V				10	µA
			V_{CCA} = 0 V, V_{CCB} = 3.6 V				–2	
			V_{CCA} = 3.6 V, V_{CCB} = 0 V				10	
I_{CCB}	Supply current B port	$V_I = V_{CCI}$ or GND, I_O = 0	$V_{CCA} = V_{CCB}$ = 1.2 V to 3.6 V				10	µA
			V_{CCA} = 0 V, V_{CCB} = 3.6 V				10	
			V_{CCA} = 3.6 V, V_{CCB} = 0 V				–2	
I_{CCA} + I_{CCB}	Combined supply current	$V_I = V_{CCI}$ or GND, I_O = 0	$V_{CCA} = V_{CCB}$ = 1.2 V to 3.6 V				20	µA
C_i	Input capacitance control pin (DIR)	V_I = 3.3 V or GND	$V_{CCA} = V_{CCB}$ = 3.3 V			2.5		pF
C_{io}	Input and output capacitance A or B port	V_O = 3.3 V or GND	$V_{CCA} = V_{CCB}$ = 3.3 V			6		pF

(7) For I/O ports, the parameter I_{OZ} includes the input leakage current.

7.6 Switching Characteristics, V_{CCA}= 1.2 V

T_A= 25°C (see Figure 11).

PARAMETER		FROM (INPUT)	TO (OUTPUT)	TEST CONDITIONS	MIN	TYP	MAX	UNIT
t_{PLH}, t_{PHL}	Propagation delay time: low-to-high-level output and high-to-low level output	A	B	V_{CCB} = 1.2 V		3.3		ns
				V_{CCB} = 1.5 V		2.7		
				V_{CCB} = 1.8 V		2.4		
				V_{CCB} = 2.5 V		2.3		
				V_{CCB} = 3.3 V		2.4		
t_{PLH}, t_{PHL}	Propagation delay time: low-to-high-level output and high-to-low level output	B	A	V_{CCB} = 1.2 V		3.3		ns
				V_{CCB} = 1.5 V		3.1		
				V_{CCB} = 1.8 V		2.9		
				V_{CCB} = 2.5 V		2.8		
				V_{CCB} = 3.3 V		2.7		
t_{PZH}, t_{PZL}	Enable time: to high level(1) and to low level(1)	DIR	A	V_{CCB} = 1.2 V		5.1		ns
				V_{CCB} = 1.5 V		5.2		
				V_{CCB} = 1.8 V		5.3		
				V_{CCB} = 2.5 V		5.2		
				V_{CCB} = 3.3 V		3.7		
t_{PZH}, t_{PZL}	Enable time: to high level(1) and to low level(1)	DIR	B	V_{CCB} = 1.2 V		5.3		ns
				V_{CCB} = 1.5 V		4.3		
				V_{CCB} = 1.8 V		4		
				V_{CCB} = 2.5 V		3.3		
				V_{CCB} = 3.3 V		3.7		
t_{PHZ}, t_{PLZ}	Disable time: from high level and from low level	DIR	A	V_{CCB} = 1.2 V		8.5		ns
				V_{CCB} = 1.5 V		6.9		
				V_{CCB} = 1.8 V		6.4		
				V_{CCB} = 2.5 V		5.5		
				V_{CCB} = 3.3 V		6.1		
t_{PHZ}, t_{PLZ}	Disable time: from high level and from low level	DIR	B	V_{CCB} = 1.2 V		8.3		ns
				V_{CCB} = 1.5 V		7.8		
				V_{CCB} = 1.8 V		7.7		
				V_{CCB} = 2.5 V		7.5		
				V_{CCB} = 3.3 V		5.9		

(1) The enable time is a calculated value, derived using the formula shown in *Enable Times*.

Copyright © 2004–2016, Texas Instruments Incorporated

7.7 Switching Characteristics, V_{CCA}= 1.5 V ± 0.1 V

All typical limits apply over T_A = 25°C, and all maximum and minimum limits apply over T_A = –40°C to 85°C (unless otherwise noted) (see Figure 11).

PARAMETER		FROM (INPUT)	TO (OUTPUT)	TEST CONDITIONS	MIN	TYP	MAX	UNIT
t_{PLH}, t_{PHL}	Propagation delay time: low-to-high-level output and high-to-low level output	A	B	V_{CCB} = 1.2 V		2.9		ns
				V_{CCB} = 1.5 V ± 0.1 V	0.7		5.6	
				V_{CCB} = 1.8 V ± 0.15 V	0.6		4.2	
				V_{CCB} = 2.5 V ± 0.2 V	0.5		4.2	
				V_{CCB} = 3.3 V ± 0.3 V	0.5		3.8	
t_{PLH}, t_{PHL}	Propagation delay time: low-to-high-level output and high-to-low level output	B	A	V_{CCB} = 1.2 V		2.6		ns
				V_{CCB} = 1.5 V ± 0.1 V	0.6		5.5	
				V_{CCB} = 1.8 V ± 0.15 V	0.4		5.3	
				V_{CCB} = 2.5 V ± 0.2 V	0.3		4.9	
				V_{CCB} = 3.3 V ± 0.3 V	0.3		4.8	
t_{PZH}, t_{PZL}	Enable time: to high level(1) and to low level(1)	DIR	A	V_{CCB} = 1.2 V		3.8		ns
				V_{CCB} = 1.5 V ± 0.1 V	1.6		6.7	
				V_{CCB} = 1.8 V ± 0.15 V	1.5		6.8	
				V_{CCB} = 2.5 V ± 0.2 V	0.3		6.9	
				V_{CCB} = 3.3 V ± 0.3 V	0.9		6.9	
t_{PZH}, t_{PZL}	Enable time: to high level(1) and to low level(1)	DIR	B	V_{CCB} = 1.2 V		5.1		ns
				V_{CCB} = 1.5 V ± 0.1 V	1.8		8.1	
				V_{CCB} = 1.8 V ± 0.15 V	1.6		7.1	
				V_{CCB} = 2.5 V ± 0.2 V	1.1		4.7	
				V_{CCB} = 3.3 V ± 0.3 V	1.4		4.5	
t_{PHZ}, t_{PLZ}	Disable time: from high level and from low level	DIR	A	V_{CCB} = 1.2 V		7.7		ns
				V_{CCB} = 1.5 V ± 0.1 V			13.6	
				V_{CCB} = 1.8 V ± 0.15 V			12.4	
				V_{CCB} = 2.5 V ± 0.2 V			9.6	
				V_{CCB} = 3.3 V ± 0.3 V			9.3	
t_{PHZ}, t_{PLZ}	Disable time: from high level and from low level	DIR	B	V_{CCB} = 1.2 V		6.7		ns
				V_{CCB} = 1.5 V ± 0.1 V			12.3	
				V_{CCB} = 1.8 V ± 0.15 V			12	
				V_{CCB} = 2.5 V ± 0.2 V			11.1	
				V_{CCB} = 3.3 V ± 0.3 V			10.7	

(1) The enable time is a calculated value, derived using the formula shown in *Enable Times*.

7.8 Switching Characteristics, V_{CCA}= 1.8 V ± 0.15 V

All typical limits apply over T_A = 25°C, and all maximum and minimum limits apply over T_A = –40°C to 85°C (unless otherwise noted) (see Figure 11).

PARAMETER		FROM (INPUT)	TO (OUTPUT)	TEST CONDITIONS	MIN	TYP	MAX	UNIT
t_{PLH}, t_{PHL}	Propagation delay time: low-to-high-level output and high-to-low level output	A	B	V_{CCB} = 1.2 V		2.8		ns
				V_{CCB} = 1.5 V ± 0.1 V	0.6		5.3	
				V_{CCB} = 1.8 V ± 0.15 V	0.5		5	
				V_{CCB} = 2.5 V ± 0.2 V	0.4		3.9	
				V_{CCB} = 3.3 V ± 0.3 V	0.4		3.4	
t_{PLH}, t_{PHL}	Propagation delay time: low-to-high-level output and high-to-low level output	B	A	V_{CCB} = 1.2 V		2.3		ns
				V_{CCB} = 1.5 V ± 0.1 V	0.5		5.2	
				V_{CCB} = 1.8 V ± 0.15 V	0.4		5	
				V_{CCB} = 2.5 V ± 0.2 V	0.3		4.6	
				V_{CCB} = 3.3 V ± 0.3 V	0.2		4.4	
t_{PZH}, t_{PZL}	Enable time: to high level(1) and to low level(1)	DIR	A	V_{CCB} = 1.2 V		3.8		ns
				V_{CCB} = 1.5 V ± 0.1 V	1.6		5.9	
				V_{CCB} = 1.8 V ± 0.15 V	1.6		5.9	
				V_{CCB} = 2.5 V ± 0.2 V	1.6		5.9	
				V_{CCB} = 3.3 V ± 0.3 V	0.5		6	
t_{PZH}, t_{PZL}	Enable time: to high level(1) and to low level(1)	DIR	B	V_{CCB} = 1.2 V		5		ns
				V_{CCB} = 1.5 V ± 0.1 V	1.8		7.7	
				V_{CCB} = 1.8 V ± 0.15 V	1.4		6.8	
				V_{CCB} = 2.5 V ± 0.2 V	1		4.4	
				V_{CCB} = 3.3 V ± 0.3 V	1.4		4.3	
t_{PHZ}, t_{PLZ}	Disable time: from high level and from low level	DIR	A	V_{CCB} = 1.2 V		7.3		ns
				V_{CCB} = 1.5 V ± 0.1 V			12.9	
				V_{CCB} = 1.8 V ± 0.15 V			11.8	
				V_{CCB} = 2.5 V ± 0.2 V			9	
				V_{CCB} = 3.3 V ± 0.3 V			8.7	
t_{PHZ}, t_{PLZ}	Disable time: from high level and from low level	DIR	B	V_{CCB} = 1.2 V		6.5		ns
				V_{CCB} = 1.5 V ± 0.1 V			11.2	
				V_{CCB} = 1.8 V ± 0.15 V			10.9	
				V_{CCB} = 2.5 V ± 0.2 V			9.8	
				V_{CCB} = 3.3 V ± 0.3 V			9.4	

(1) The enable time is a calculated value, derived using the formula shown in *Enable Times*.

Copyright © 2004–2016, Texas Instruments Incorporated

7.9 Switching Characteristics, V_{CCA}= 2.5 V ± 0.2 V

All typical limits apply over T_A = 25°C, and all maximum and minimum limits apply over T_A = –40°C to 85°C (unless otherwise noted) (see Figure 11).

PARAMETER		FROM (INPUT)	TO (OUTPUT)	TEST CONDITIONS	MIN	TYP	MAX	UNIT
t_{PLH}, t_{PHL}	Propagation delay time: low-to-high-level output and high-to-low level output	A	B	V_{CCB} = 1.2 V		2.6		ns
				V_{CCB} = 1.5 V ± 0.1 V	0.5		4.9	
				V_{CCB} = 1.8 V ± 0.15 V	0.4		4.6	
				V_{CCB} = 2.5 V ± 0.2 V	0.3		3.4	
				V_{CCB} = 3.3 V ± 0.3 V	0.3		3	
t_{PLH}, t_{PHL}	Propagation delay time: low-to-high-level output and high-to-low level output	B	A	V_{CCB} = 1.2 V		2.2		ns
				V_{CCB} = 1.5 V ± 0.1 V	0.4		4.2	
				V_{CCB} = 1.8 V ± 0.15 V	0.3		3.8	
				V_{CCB} = 2.5 V ± 0.2 V	0.2		3.4	
				V_{CCB} = 3.3 V ± 0.3 V	0.2		3.3	
t_{PZH}, t_{PZL}	Enable time: to high level(1) and to low level(1)	DIR	A	V_{CCB} = 1.2 V		2.8		ns
				V_{CCB} = 1.5 V ± 0.1 V	0.3		3.8	
				V_{CCB} = 1.8 V ± 0.15 V	0.8		3.8	
				V_{CCB} = 2.5 V ± 0.2 V	0.4		3.8	
				V_{CCB} = 3.3 V ± 0.3 V	0.5		3.8	
t_{PZH}, t_{PZL}	Enable time: to high level(1) and to low level(1)	DIR	B	V_{CCB} = 1.2 V		4.9		ns
				V_{CCB} = 1.5 V ± 0.1 V	2		7.6	
				V_{CCB} = 1.8 V ± 0.15 V	1.5		6.5	
				V_{CCB} = 2.5 V ± 0.2 V	0.6		4.1	
				V_{CCB} = 3.3 V ± 0.3 V	1		4	
t_{PHZ}, t_{PLZ}	Disable time: from high level and from low level	DIR	A	V_{CCB} = 1.2 V		7.1		ns
				V_{CCB} = 1.5 V ± 0.1 V			11.8	
				V_{CCB} = 1.8 V ± 0.15 V			10.3	
				V_{CCB} = 2.5 V ± 0.2 V			7.5	
				V_{CCB} = 3.3 V ± 0.3 V			7.3	
t_{PHZ}, t_{PLZ}	Disable time: from high level and from low level	DIR	B	V_{CCB} = 1.2 V		5.4		ns
				V_{CCB} = 1.5 V ± 0.1 V			8.6	
				V_{CCB} = 1.8 V ± 0.15 V			8.1	
				V_{CCB} = 2.5 V ± 0.2 V			7	
				V_{CCB} = 3.3 V ± 0.3 V			6.6	

(1) The enable time is a calculated value, derived using the formula shown in *Enable Times*.

7.10 Switching Characteristics, V_{CCA}= 3.3 V ± 0.3 V

All typical limits apply over T_A = 25°C, and all maximum and minimum limits apply over T_A = –40°C to 85°C (unless otherwise noted) (see Figure 11).

PARAMETER		FROM (INPUT)	TO (OUTPUT)	TEST CONDITIONS	MIN	TYP	MAX	UNIT
t_{PLH}, t_{PHL}	Propagation delay time: low-to-high-level output and high-to-low level output	A	B	V_{CCB} = 1.2 V		2.6		ns
				V_{CCB} = 1.5 V ± 0.1 V	0.4		4.7	
				V_{CCB} = 1.8 V ± 0.15 V	0.3		4.4	
				V_{CCB} = 2.5 V ± 0.2 V	0.2		3.3	
				V_{CCB} = 3.3 V ± 0.3 V	0.2		2.8	
t_{PLH}, t_{PHL}	Propagation delay time: low-to-high-level output and high-to-low level output	B	A	V_{CCB} = 1.2 V		2.2		ns
				V_{CCB} = 1.5 V ± 0.1 V	0.4		3.8	
				V_{CCB} = 1.8 V ± 0.15 V	0.3		3.4	
				V_{CCB} = 2.5 V ± 0.2 V	0.2		3	
				V_{CCB} = 3.3 V ± 0.3 V	0.1		2.8	
t_{PZH}, t_{PZL}	Enable time: to high level(1) and to low level(1)	DIR	A	V_{CCB} = 1.2 V		3.1		ns
				V_{CCB} = 1.5 V ± 0.1 V	1.3		4.3	
				V_{CCB} = 1.8 V ± 0.15 V	1.3		4.3	
				V_{CCB} = 2.5 V ± 0.2 V	1.3		4.3	
				V_{CCB} = 3.3 V ± 0.3 V	1.3		4.3	
t_{PZH}, t_{PZL}	Enable time: to high level(1) and to low level(1)	DIR	B	V_{CCB} = 1.2 V		4		ns
				V_{CCB} = 1.5 V ± 0.1 V	0.7		7.4	
				V_{CCB} = 1.8 V ± 0.15 V	0.6		6.5	
				V_{CCB} = 2.5 V ± 0.2 V	0.7		4	
				V_{CCB} = 3.3 V ± 0.3 V	1.5		3.9	
t_{PHZ}, t_{PLZ}	Disable time: from high level and from low level	DIR	A	V_{CCB} = 1.2 V		6.2		ns
				V_{CCB} = 1.5 V ± 0.1 V			11.2	
				V_{CCB} = 1.8 V ± 0.15 V			9.9	
				V_{CCB} = 2.5 V ± 0.2 V			7	
				V_{CCB} = 3.3 V ± 0.3 V			6.7	
t_{PHZ}, t_{PLZ}	Disable time: from high level and from low level	DIR	B	V_{CCB} = 1.2 V		5.7		ns
				V_{CCB} = 1.5 V ± 0.1 V			8.9	
				V_{CCB} = 1.8 V ± 0.15 V			8.5	
				V_{CCB} = 2.5 V ± 0.2 V			7.2	
				V_{CCB} = 3.3 V ± 0.3 V			6.8	

(1) The enable time is a calculated value, derived using the formula shown in *Enable Times*.

Copyright © 2004–2016, Texas Instruments Incorporated

7.11 Operating Characteristics

T_A= 25°C

PARAMETER		FROM (INPUT)	TO (OUTPUT)	TEST CONDITIONS		TYP	UNIT
C_{pdA}	Power dissipation capacitance per transceiver(1) port A	A	B	C_L = 0 pF, f = 10 MHz, t_r = t_f = 1 ns	V_{CCA} = V_{CCB} = 1.2 V	3	pF
					V_{CCA} = V_{CCB} = 1.5 V	3	
					V_{CCA} = V_{CCB} = 1.8 V	3	
					V_{CCA} = V_{CCB} = 2.5 V	3	
					V_{CCA} = V_{CCB} = 3.3 V	4	
		B	A	C_L = 0 pF, f = 10 MHz, t_r = t_f = 1 ns	V_{CCA} = V_{CCB} = 1.2 V	14	pF
					V_{CCA} = V_{CCB} = 1.5 V	14	
					V_{CCA} = V_{CCB} = 1.8 V	14	
					V_{CCA} = V_{CCB} = 2.5 V	15	
					V_{CCA} = V_{CCB} = 3.3 V	16	
C_{pdB}	Power dissipation capacitance per transceiver(1) port B	A	B	C_L = 0 pF, f = 10 MHz, t_r = t_f = 1 ns	V_{CCA} = V_{CCB} = 1.2 V	14	pF
					V_{CCA} = V_{CCB} = 1.5 V	14	
					V_{CCA} = V_{CCB} = 1.8 V	14	
					V_{CCA} = V_{CCB} = 2.5 V	15	
					V_{CCA} = V_{CCB} = 3.3 V	16	
		B	A	C_L = 0 pF, f = 10 MHz, t_r = t_f = 1 ns	V_{CCA} = V_{CCB} = 1.2 V	3	pF
					V_{CCA} = V_{CCB} = 1.5 V	3	
					V_{CCA} = V_{CCB} = 1.8 V	3	
					V_{CCA} = V_{CCB} = 2.5 V	3	
					V_{CCA} = V_{CCB} = 3.3 V	4	

(1) See *CMOS Power Consumption and Cpd Calculation*, SCAA035.

7.12 Typical Characteristics

T_A= 25°C

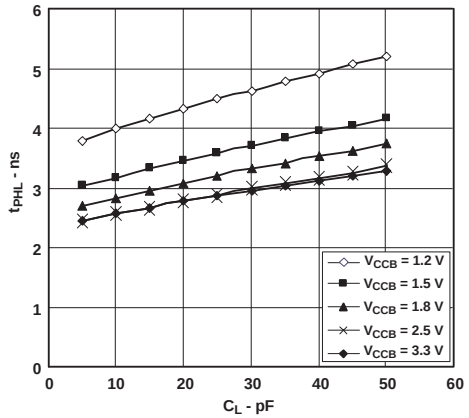

V_{CCA}= 1.2 V

Figure 1. Typical Propagation Delay (A to B) vs Load Capacitance

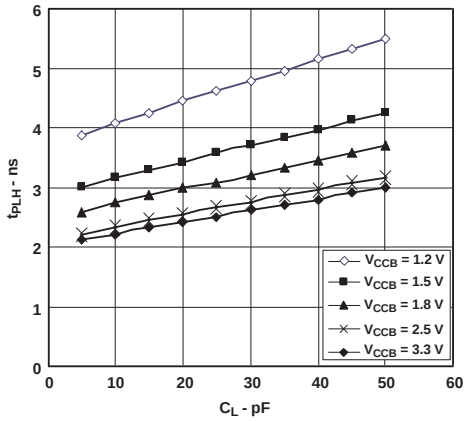

V_{CCA}= 1.2 V

Figure 2. Typical Propagation Delay (A to B) vs Load Capacitance

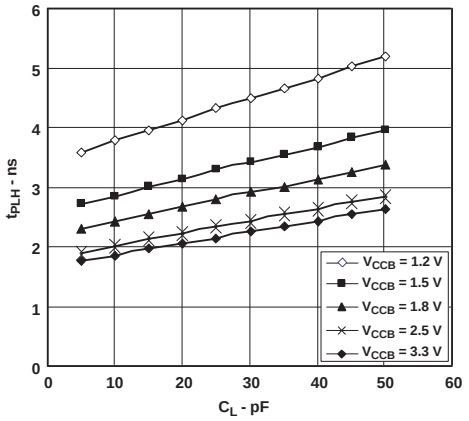

V_{CCA}= 1.5 V

Figure 3. Typical Propagation Delay (A to B) vs Load Capacitance

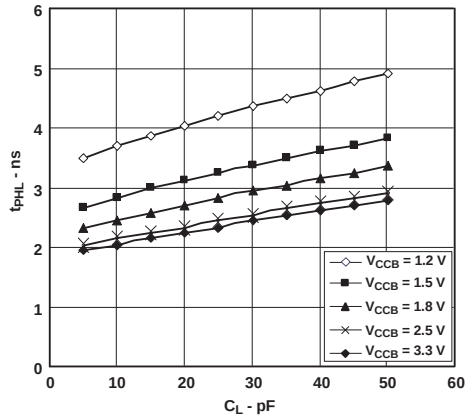

V_{CCA}= 1.5 V

Figure 4. Typical Propagation Delay (A to B) vs Load Capacitance

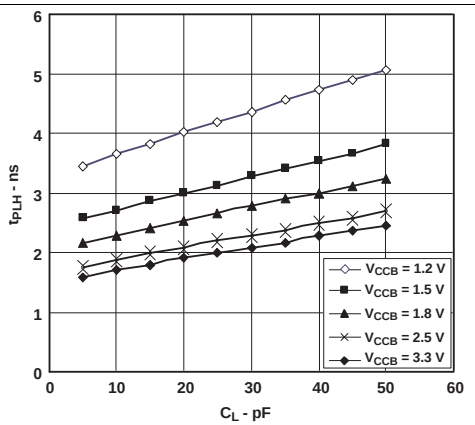

V_{CCA}= 1.8 V

Figure 5. Typical Propagation Delay (A to B) vs Load Capacitance

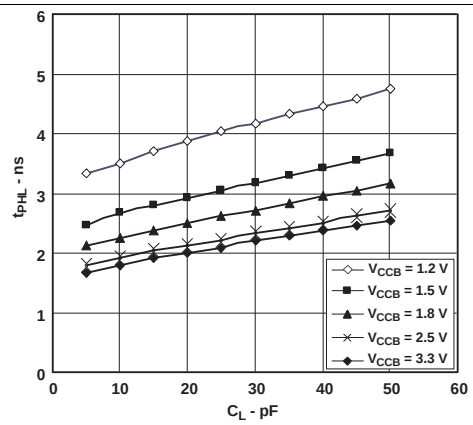

V_{CCA}= 1.8 V

Figure 6. Typical Propagation Delay (A to B) vs Load Capacitance

Copyright © 2004–2016, Texas Instruments Incorporated

Typical Characteristics (continued)

T_A= 25°C

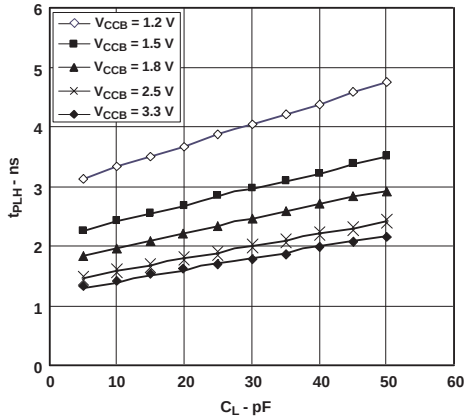

V_{CCA}= 2.5 V

Figure 7. Typical Propagation Delay (A to B) vs Load Capacitance

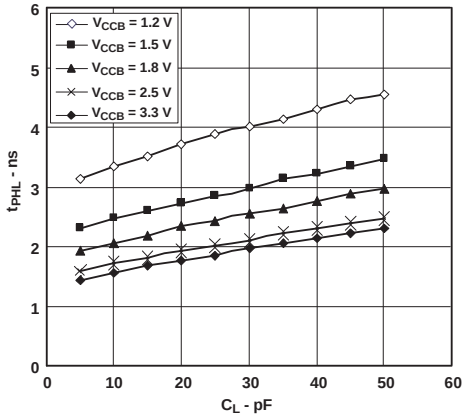

V_{CCA}= 2.5 V

Figure 8. Typical Propagation Delay (A to B) vs Load Capacitance

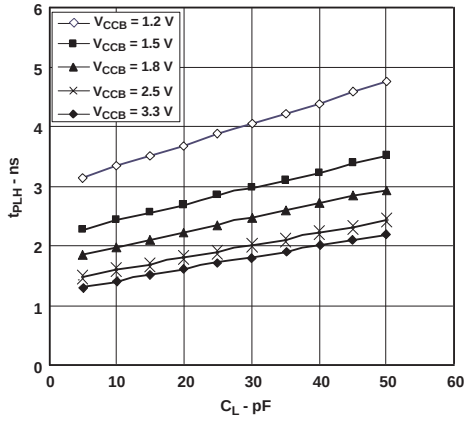

V_{CCA}= 3.3 V

Figure 9. Typical Propagation Delay (A to B) vs Load Capacitance

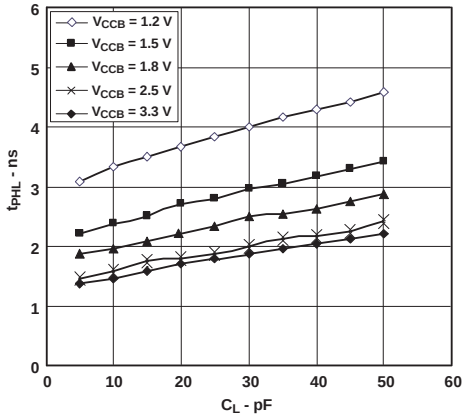

V_{CCA}= 3.3 V

Figure 10. Typical Propagation Delay (A to B) vs Load Capacitance

8 Parameter Measurement Information

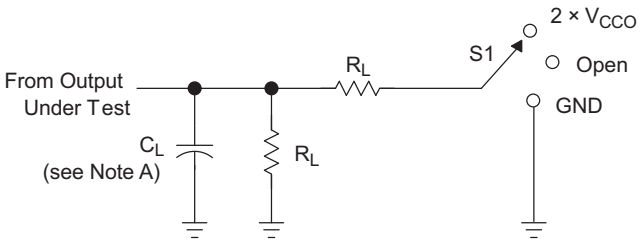

LOAD CIRCUIT

TEST	S1
t_{pd}	Open
t_{PLZ}/t_{PZL}	2 × V_{CCO}
t_{PHZ}/t_{PZH}	GND

V_{CCO}	C_L	R_L	V_{TP}
1.2 V	15 pF	2 kW	0.1 V
1.5 V ± 0.1 V	15 pF	2 kW	0.1 V
1.8 V ± 0.15 V	15 pF	2 kW	0.15 V
2.5 V ± 0.2 V	15 pF	2 kW	0.15 V
3.3 V ± 0.3 V	15 pF	2 kW	0.3 V

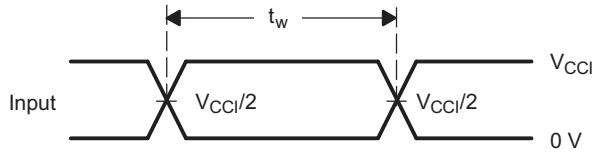

VOLTAGE WAVEFORMS
PULSE DURATION

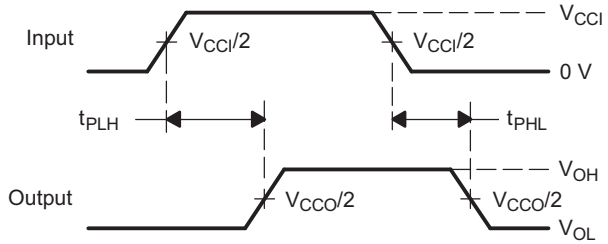

VOLTAGE WAVEFORMS
PROPAGATION DELAY TIMES

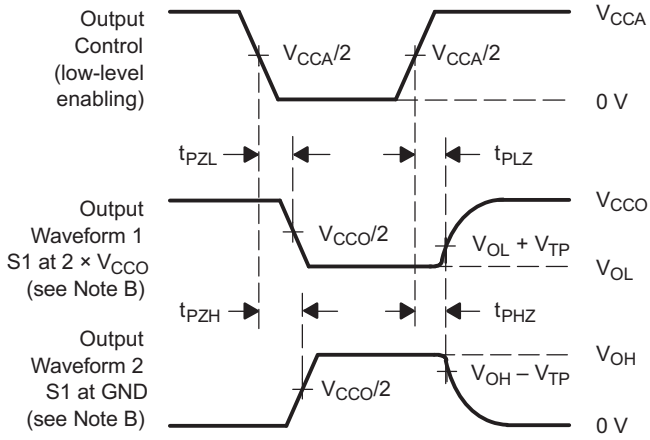

VOLTAGE WAVEFORMS
ENABLE AND DISABLE TIMES

NOTES:
A. C_L includes probe and jig capacitance.
B. Waveform 1 is for an output with internal conditions such that the output is low, except when disabled by the output control. Waveform 2 is for an output with internal conditions such that the output is high, except when disabled by the output control.
C. All input pulses are supplied by generators having the following characteristics: PRR 10 MHz, Z_O = 50 W, dv/dt ≥ 1 V/ns.
D. The outputs are measured one at a time, with one transition per measurement.
E. t_{PLZ} and t_{PHZ} are the same as t_{dis}.
F. t_{PZL} and t_{PZH} are the same as t_{en}.
G. t_{PLH} and t_{PHL} are the same as t_{pd}.
H. V_{CCI} is the V_{CC} associated with the input port.
I. V_{CCO} is the V_{CC} associated with the output port.

Figure 11. Load Circuit and Voltage Waveforms

Copyright © 2004–2016, Texas Instruments Incorporated

9 Detailed Description

9.1 Overview

The SN74AVCH1T45 is a single-bit, dual-supply, noninverting voltage level translator. Pins A and DIR are referenced to V_{CCA}, while pin B is referenced to V_{CCB}. Both the A port and B port can accept I/O voltages ranging from 1.2 V to 3.6 V. The high on DIR allows data transmission from Port A to Port B and a low on DIR allows data transmission from Port B to Port A. See applications report, *AVC Logic Family Technology and Applications* (SCLA015), for more information.

9.2 Functional Block Diagram

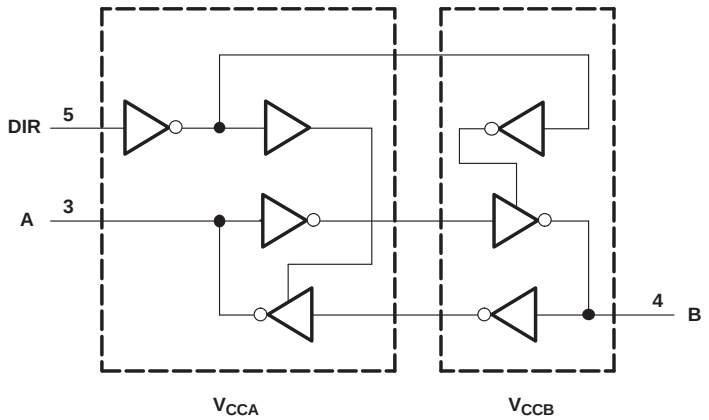

9.3 Feature Description

9.3.1 Fully Configurable Dual-Rail Design

Both V_{CCA} and V_{CCB} can be supplied at any voltage from 1.2 V to 3.6 V, making the device suitable for translating between any of the voltage nodes (1.2 V, 1.8 V, 2.5 V and 3.3 V).

9.3.2 Supports High-Speed Translation

SN74AVCH1T45 can support high data rate applications, which can be calculated from the maximum propagation delay. This is also dependent on output load. For example, a 1.8-V to 3.3-V conversion yields a maximum data rate of 500 Mbps.

9.3.3 Partial-Power-Down Mode Operation

I_{off} circuitry disables the outputs, preventing damaging current backflow through the SN74AVCH1T45 when it is powered down. This can occur in applications where subsections of a system are powered down (partial-power-down) to reduce power consumption.

9.3.4 Active Bus-Hold Circuitry

Active bus-hold circuitry holds unused or undriven data inputs at a valid logic state, which helps with board space savings and reduced component costs. Use of pullup or pulldown resistors with the bus-hold circuitry is not recommended. See applications report, *Bus-Hold Circuit* (SCLA015), for more information.

9.3.5 V_{CC} Isolation

The V_{CC} isolation feature ensures that if either V_{CCA} or V_{CCB} are at GND (or < 0.4 V), both ports will be in a high-impedance state (I_{OZ} as shown in *Electrical Characteristics*). This prevents false logic levels from being presented to either bus.

9.4 Device Functional Modes

Table 1 lists the functional modes of the SN74AVCH1T45.

Table 1. Function Table

DIR	OPERATION
L	B data to A bus
H	A data to B bus

10 Application and Implementation

NOTE

Information in the following applications sections is not part of the TI component specification, and TI does not warrant its accuracy or completeness. TI's customers are responsible for determining suitability of components for their purposes. Customers should validate and test their design implementation to confirm system functionality.

10.1 Application Information

The SN74AVCH1T45 device can be used in level-translation applications for interfacing devices or systems operating at different interface voltages with one another. The maximum data rate can be up to 500 Mbps when device translate signal from 1.8 V to 3.3 V.

10.2 Typical Applications

10.2.1 Unidirectional Logic Level-Shifting Application

Figure 12 shows an example of the SN74AVCH1T45 being used in a unidirectional logic level-shifting application.

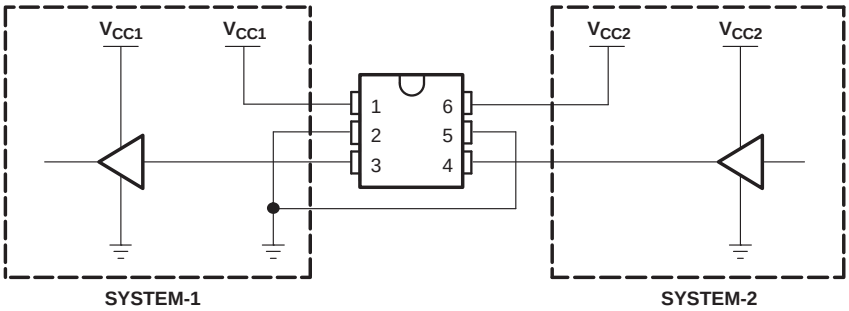

Figure 12. Unidirectional Logic Level-Shifting Application Diagram

Table 2. Data Transmission: SYSTEM-1 and SYSTEM-2

PIN	NAME	FUNCTION	DESCRIPTION
1	V_{CCA}	V_{CC1}	SYSTEM-1 supply voltage (1.2 V to 3.6 V)
2	GND	GND	Device GND
3	A	OUT	Output level depends on V_{CC1} voltage.
4	B	IN	Input threshold value depends on V_{CC2} voltage.
5	DIR	DIR	GND (low level) determines B-port to A-port direction.
6	V_{CCB}	V_{CC2}	SYSTEM-2 supply voltage (1.2 V to 3.6 V)

Copyright © 2004–2016, Texas Instruments Incorporated

10.2.1.1 Design Requirements

For this design example, use the parameters listed in Table 3.

Table 3. Design Parameters

DESIGN PARAMETERS	EXAMPLE VALUES
Input voltage	1.2 V to 3.6 V
Output voltage	1.2 V to 3.6 V

10.2.1.2 Detailed Design Procedure

To begin the design process, determine the following:

- Input voltage range
  - Use the supply voltage of the device that is driving the SN74AVCH1T45 device to determine the input voltage range. For a valid logic-high, the value must exceed the V_{IH} of the input port. For a valid logic low the value must be less than the V_{IL} of the input port.
- Output voltage range
  - Use the supply voltage of the device that the SN74AVCH1T45 device is driving to determine the output voltage range.

10.2.1.3 Application Curve

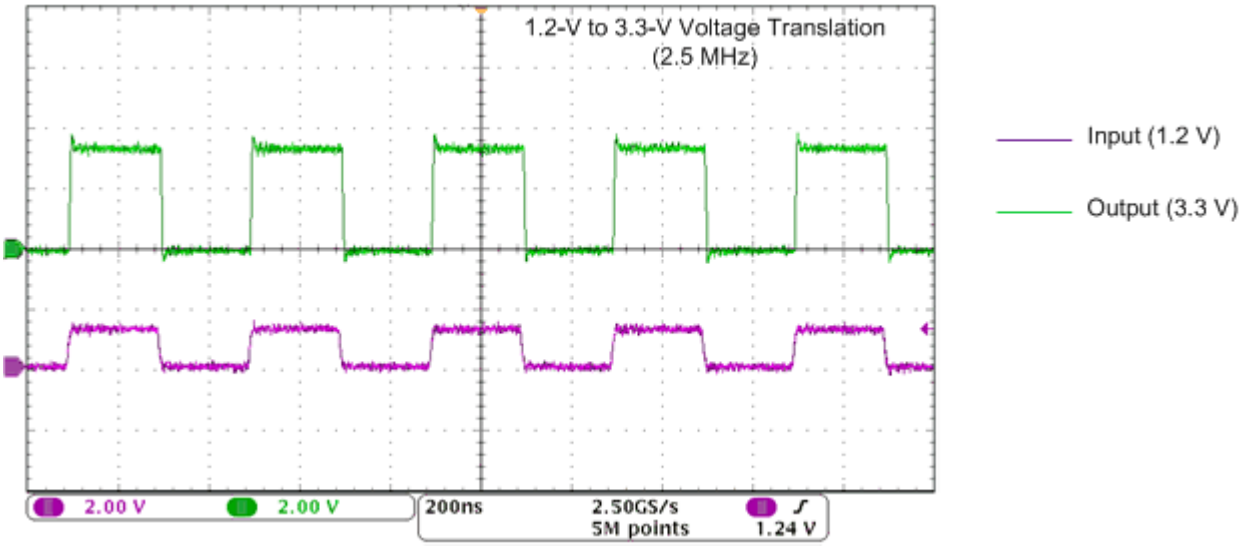

Figure 13. Translation Up (1.2 V to 3.3 V) at 2.5 MHz

10.2.2 Bidirectional Logic Level-Shifting Application

Figure 14 shows the SN74AVCH1T45 being used in a bidirectional logic level-shifting application. Because the SN74AVCH1T45 does not have an output-enable (OE) pin, the system designer should take precautions to avoid bus contention between SYSTEM-1 and SYSTEM-2 when changing directions.

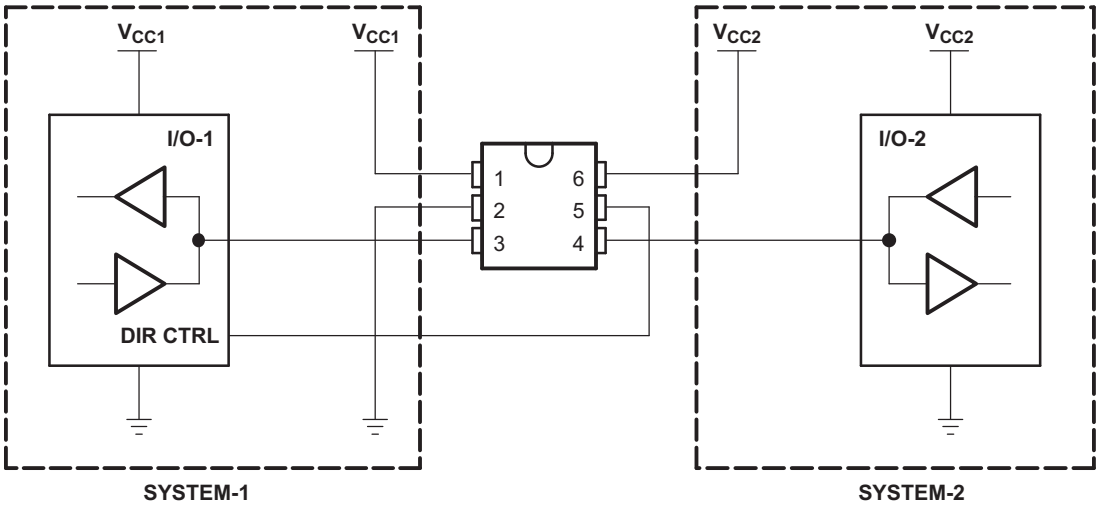

Figure 14. Bidirectional Logic Level-Shifting Application Diagram

The following table shows data transmission from SYSTEM-1 to SYSTEM-2 and then from SYSTEM-2 to SYSTEM-1.

Table 4. Data Transmission: SYSTEM-1 and SYSTEM-2

STATE	DIR CTRL	I/O-1	I/O-2	DESCRIPTION
1	H	Out	In	SYSTEM-1 data to SYSTEM-2
2	H	Hi-Z	Hi-Z	SYSTEM-2 is getting ready to send data to SYSTEM-1. I/O-1 and I/O-2 are disabled.
3	L	Hi-Z	Hi-Z	DIR bit is flipped. I/O-1 and I/O-2 still are disabled.
4	L	In	Out	SYSTEM-2 data to SYSTEM-1

10.2.2.1 Design Requirements

Refer to *Design Requirements* found in *Unidirectional Logic Level-Shifting Application*.

10.2.2.2 Detailed Design Procedure

10.2.2.2.1 Enable Times

Calculate the enable times for the SN74AVCH1T45 using the following formulas:

- t_{PZH} (DIR to A) = t_{PLZ}(DIR to B) + t_{PLH} (B to A)
- t_{PZL} (DIR to A) = t_{PHZ}(DIR to B) + t_{PHL} (B to A)
- t_{PZH} (DIR to B) = t_{PLZ}(DIR to A) + t_{PLH} (A to B)
- t_{PZL} (DIR to B) = t_{PHZ}(DIR to A) + t_{PHL} (A to B)

In a bidirectional application, these enable times provide the maximum delay from the time the DIR bit is switched until an output is expected. For example, if the SN74AVCH1T45 initially is transmitting from A to B, then the DIR bit is switched; the B port of the device must be disabled before presenting it with an input. After the B port has been disabled, an input signal applied to it appears on the corresponding A port after the specified propagation delay.

Copyright © 2004–2016, Texas Instruments Incorporated

10.2.2.3 Application Curve

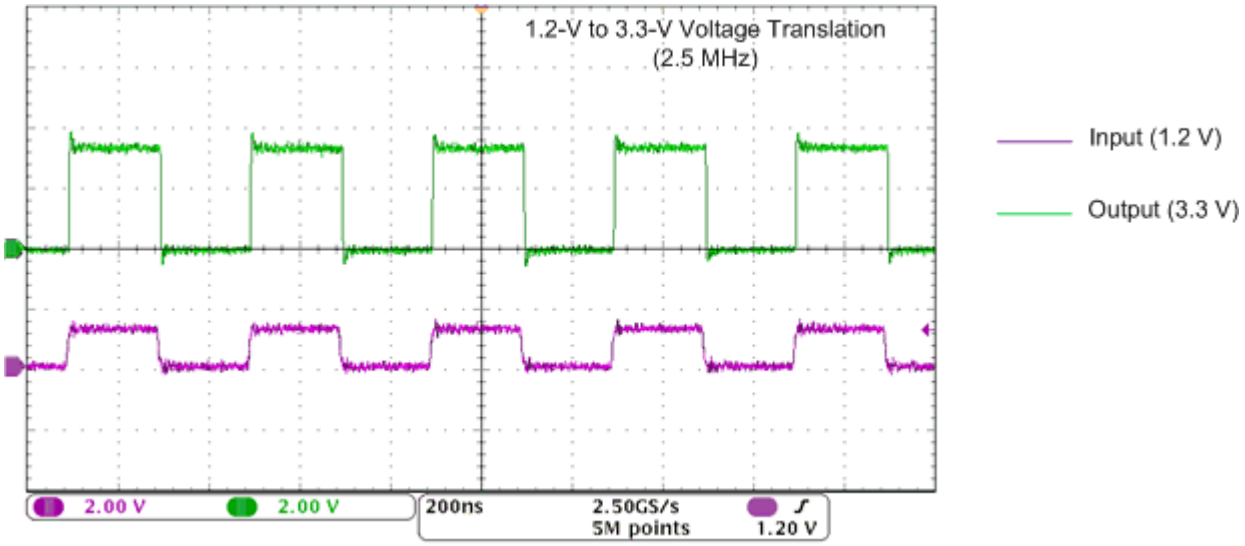

Figure 15. Translation Up (1.2 V to 3.3 V) at 2.5 MHz

11 Power Supply Recommendations

A proper power-up sequence must be followed to avoid excessive supply current, bus contention, oscillations, or other anomalies. To guard against such power-up problems, take the following precautions:

1. Connect ground before any supply voltage is applied.
2. Power up V_{CCA}.
3. V_{CCB} can be ramped up along with or after V_{CCA}.

Table 5. Typical Total Static Power Consumption (I_{CCA} + I_{CCB})

V_{CCB}	V_{CCA}						UNIT
	0 V	1.2 V	1.5 V	1.8 V	2.5 V	3.3 V	
0 V	0	<0.5	<0.5	<0.5	<0.5	<0.5	μA
1.2 V	<0.5	<1	<1	<1	<1	1	
1.5 V	<0.5	<1	<1	<1	<1	1	
1.8 V	<0.5	<1	<1	<1	<1	<1	
2.5 V	<0.5	1	<1	<1	<1	<1	
3.3 V	<0.5	1	<1	<1	<1	<1	

12 Layout

12.1 Layout Guidelines

To ensure reliability of the device, TI recommends following common printed-circuit board layout guidelines.

- Bypass capacitors should be used on power supplies.
- Short trace lengths should be used to avoid excessive loading.
- Placing pads on the signal paths for loading capacitors or pullup resistors to help adjust rise and fall times of signals depending on the system requirements.

12.2 Layout Example

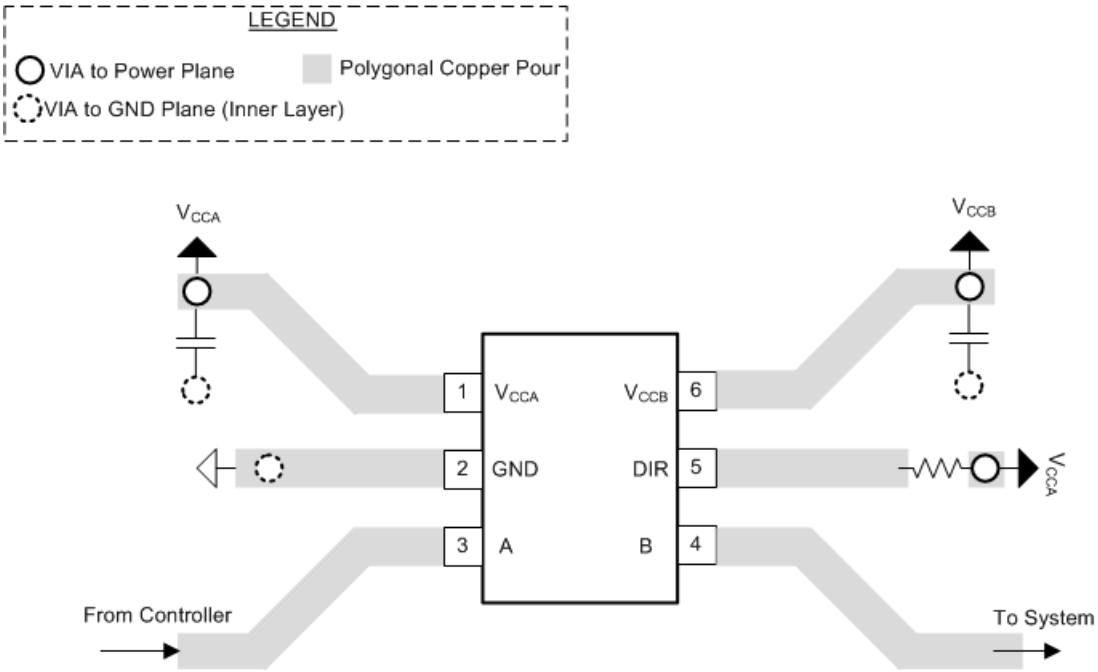

Figure 16. PCB Layout Example

Copyright © 2004–2016, Texas Instruments Incorporated

13 Device and Documentation Support

13.1 Documentation Support

13.1.1 Related Documentation

For related documentation see the following:

- *Designing with SN74LVCXT245 and SN74LVCHXT245 Family of Direction Controlled Voltage Translators/Level-Shifters*, SLVA746
- *Bus-Hold Circuit*, SCLA015
- *AVC Logic Family Technology and Applications*, SCEA006

13.2 Community Resources

The following links connect to TI community resources. Linked contents are provided "AS IS" by the respective contributors. They do not constitute TI specifications and do not necessarily reflect TI's views; see TI's Terms of Use.

TI E2E™ Online Community ***TI's Engineer-to-Engineer (E2E) Community.*** Created to foster collaboration among engineers. At e2e.ti.com, you can ask questions, share knowledge, explore ideas and help solve problems with fellow engineers.

Design Support ***TI's Design Support*** Quickly find helpful E2E forums along with design support tools and contact information for technical support.

13.3 Trademarks

NanoStar, NanoFree, E2E are trademarks of Texas Instruments.
All other trademarks are the property of their respective owners.

13.4 Electrostatic Discharge Caution

These devices have limited built-in ESD protection. The leads should be shorted together or the device placed in conductive foam during storage or handling to prevent electrostatic damage to the MOS gates.

13.5 Glossary

SLYZ022 — *TI Glossary*.

This glossary lists and explains terms, acronyms, and definitions.

14 Mechanical, Packaging, and Orderable Information

The following pages include mechanical, packaging, and orderable information. This information is the most current data available for the designated devices. This data is subject to change without notice and revision of this document. For browser-based versions of this data sheet, refer to the left-hand navigation.

PACKAGING INFORMATION

Orderable Device	Status (1)	Package Type	Package Drawing	Pins	Package Qty	Eco Plan (2)	Lead finish/ Ball material (6)	MSL Peak Temp (3)	Op Temp (°C)	Device Marking (4/5)	Samples
74AVCH1T45DBVRE4	ACTIVE	SOT-23	DBV	6	3000	RoHS & Green	NIPDAU	Level-1-260C-UNLIM	-40 to 85	(ET1F, ET1R)	Samples
74AVCH1T45DBVRG4	ACTIVE	SOT-23	DBV	6	3000	RoHS & Green	NIPDAU	Level-1-260C-UNLIM	-40 to 85	(ET1F, ET1R)	Samples
74AVCH1T45DBVTG4	ACTIVE	SOT-23	DBV	6	250	RoHS & Green	NIPDAU	Level-1-260C-UNLIM	-40 to 85	(ET1F, ET1R)	Samples
74AVCH1T45DCKRE4	ACTIVE	SC70	DCK	6	3000	RoHS & Green	NIPDAU	Level-1-260C-UNLIM	-40 to 85	(TFF, TFR)	Samples
74AVCH1T45DCKRG4	ACTIVE	SC70	DCK	6	3000	RoHS & Green	NIPDAU	Level-1-260C-UNLIM	-40 to 85	(TFF, TFR)	Samples
74AVCH1T45DCKTG4	ACTIVE	SC70	DCK	6	250	RoHS & Green	NIPDAU	Level-1-260C-UNLIM	-40 to 85	(TFF, TFR)	Samples
SN74AVCH1T45DBVR	ACTIVE	SOT-23	DBV	6	3000	RoHS & Green	NIPDAU	Level-1-260C-UNLIM	-40 to 85	(ET1F, ET1R)	Samples
SN74AVCH1T45DBVT	ACTIVE	SOT-23	DBV	6	250	RoHS & Green	NIPDAU	Level-1-260C-UNLIM	-40 to 85	(ET1F, ET1R)	Samples
SN74AVCH1T45DCKR	ACTIVE	SC70	DCK	6	3000	RoHS & Green	NIPDAU	Level-1-260C-UNLIM	-40 to 85	(TFF, TFR)	Samples
SN74AVCH1T45DCKT	ACTIVE	SC70	DCK	6	250	RoHS & Green	NIPDAU	Level-1-260C-UNLIM	-40 to 85	(TFF, TFR)	Samples
SN74AVCH1T45YZPR	ACTIVE	DSBGA	YZP	6	3000	RoHS & Green	SNAGCU	Level-1-260C-UNLIM	-40 to 85	(TE2, TEN)	Samples

(1) The marketing status values are defined as follows:
ACTIVE: Product device recommended for new designs.
LIFEBUY: TI has announced that the device will be discontinued, and a lifetime-buy period is in effect.
NRND: Not recommended for new designs. Device is in production to support existing customers, but TI does not recommend using this part in a new design.
PREVIEW: Device has been announced but is not in production. Samples may or may not be available.
OBSOLETE: TI has discontinued the production of the device.

(2) **RoHS:** TI defines "RoHS" to mean semiconductor products that are compliant with the current EU RoHS requirements for all 10 RoHS substances, including the requirement that RoHS substance do not exceed 0.1% by weight in homogeneous materials. Where designed to be soldered at high temperatures, "RoHS" products are suitable for use in specified lead-free processes. TI may reference these types of products as "Pb-Free".
RoHS Exempt: TI defines "RoHS Exempt" to mean products that contain lead but are compliant with EU RoHS pursuant to a specific EU RoHS exemption.
Green: TI defines "Green" to mean the content of Chlorine (Cl) and Bromine (Br) based flame retardants meet JS709B low halogen requirements of <=1000ppm threshold. Antimony trioxide based flame retardants must also meet the <=1000ppm threshold requirement.

(3) MSL, Peak Temp. - The Moisture Sensitivity Level rating according to the JEDEC industry standard classifications, and peak solder temperature.

(4) There may be additional marking, which relates to the logo, the lot trace code information, or the environmental category on the device.

(5) Multiple Device Markings will be inside parentheses. Only one Device Marking contained in parentheses and separated by a "~" will appear on a device. If a line is indented then it is a continuation of the previous line and the two combined represent the entire Device Marking for that device.

(6) Lead finish/Ball material - Orderable Devices may have multiple material finish options. Finish options are separated by a vertical ruled line. Lead finish/Ball material values may wrap to two lines if the finish value exceeds the maximum column width.

Important Information and Disclaimer: The information provided on this page represents TI's knowledge and belief as of the date that it is provided. TI bases its knowledge and belief on information provided by third parties, and makes no representation or warranty as to the accuracy of such information. Efforts are underway to better integrate information from third parties. TI has taken and continues to take reasonable steps to provide representative and accurate information but may not have conducted destructive testing or chemical analysis on incoming materials and chemicals. TI and TI suppliers consider certain information to be proprietary, and thus CAS numbers and other limited information may not be available for release.

In no event shall TI's liability arising out of such information exceed the total purchase price of the TI part(s) at issue in this document sold by TI to Customer on an annual basis.

TAPE AND REEL INFORMATION

REEL DIMENSIONS

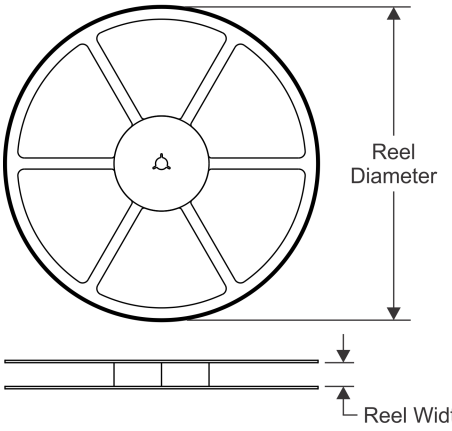

TAPE DIMENSIONS

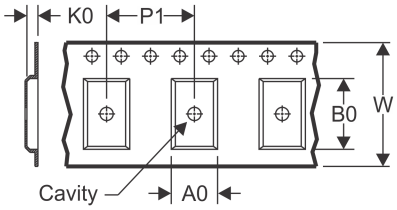

A0	Dimension designed to accommodate the component width
B0	Dimension designed to accommodate the component length
K0	Dimension designed to accommodate the component thickness
W	Overall width of the carrier tape
P1	Pitch between successive cavity centers

QUADRANT ASSIGNMENTS FOR PIN 1 ORIENTATION IN TAPE

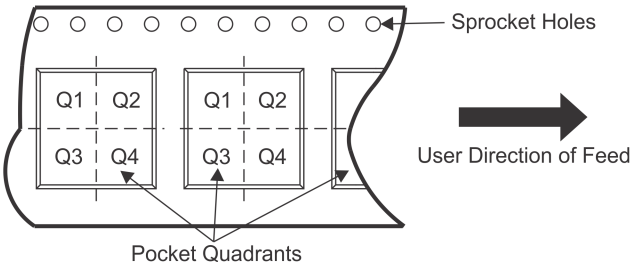

*All dimensions are nominal

Device	Package Type	Package Drawing	Pins	SPQ	Reel Diameter (mm)	Reel Width W1 (mm)	A0 (mm)	B0 (mm)	K0 (mm)	P1 (mm)	W (mm)	Pin1 Quadrant
SN74AVCH1T45DBVR	SOT-23	DBV	6	3000	180.0	8.4	3.23	3.17	1.37	4.0	8.0	Q3
SN74AVCH1T45DBVT	SOT-23	DBV	6	250	180.0	8.4	3.23	3.17	1.37	4.0	8.0	Q3
SN74AVCH1T45DCKR	SC70	DCK	6	3000	180.0	8.4	2.41	2.41	1.2	4.0	8.0	Q3
SN74AVCH1T45DCKT	SC70	DCK	6	250	180.0	8.4	2.41	2.41	1.2	4.0	8.0	Q3
SN74AVCH1T45YZPR	DSBGA	YZP	6	3000	178.0	9.2	1.02	1.52	0.63	4.0	8.0	Q1

TAPE AND REEL BOX DIMENSIONS

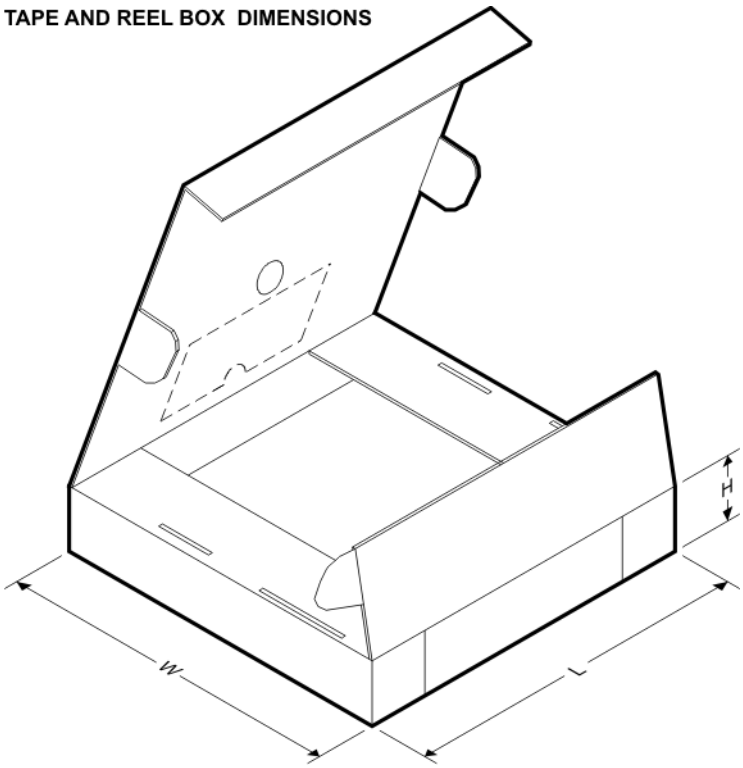

*All dimensions are nominal

Device	Package Type	Package Drawing	Pins	SPQ	Length (mm)	Width (mm)	Height (mm)
SN74AVCH1T45DBVR	SOT-23	DBV	6	3000	202.0	201.0	28.0
SN74AVCH1T45DBVT	SOT-23	DBV	6	250	202.0	201.0	28.0
SN74AVCH1T45DCKR	SC70	DCK	6	3000	202.0	201.0	28.0
SN74AVCH1T45DCKT	SC70	DCK	6	250	202.0	201.0	28.0
SN74AVCH1T45YZPR	DSBGA	YZP	6	3000	220.0	220.0	35.0

DCK (R–PDSO–G6) PLASTIC SMALL–OUTLINE PACKAGE

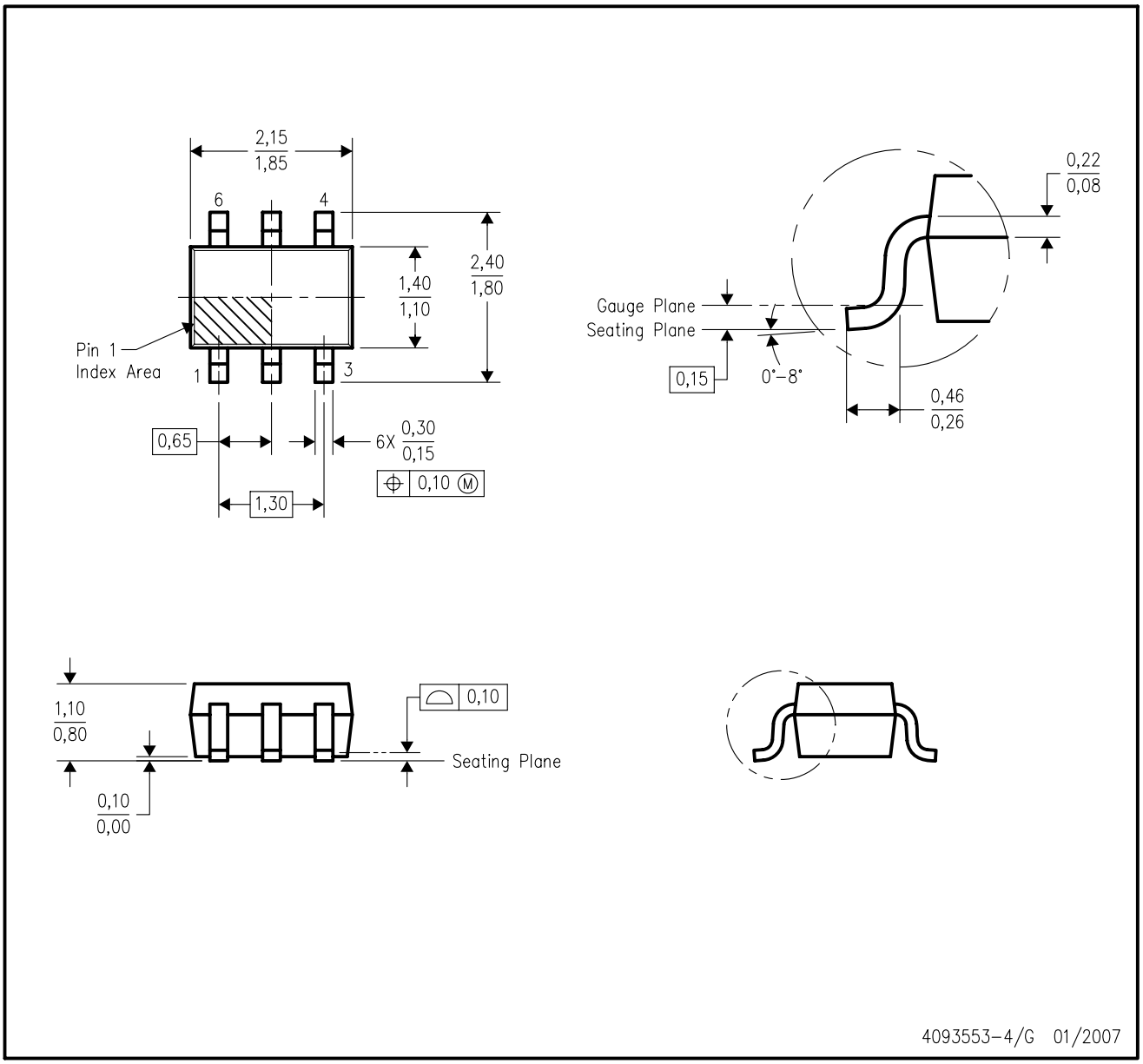

NOTES:
A. All linear dimensions are in millimeters.
B. This drawing is subject to change without notice.
C. Body dimensions do not include mold flash or protrusion. Mold flash and protrusion shall not exceed 0.15 per side.
D. Falls within JEDEC MO–203 variation AB.

DCK (R-PDSO-G6) PLASTIC SMALL OUTLINE

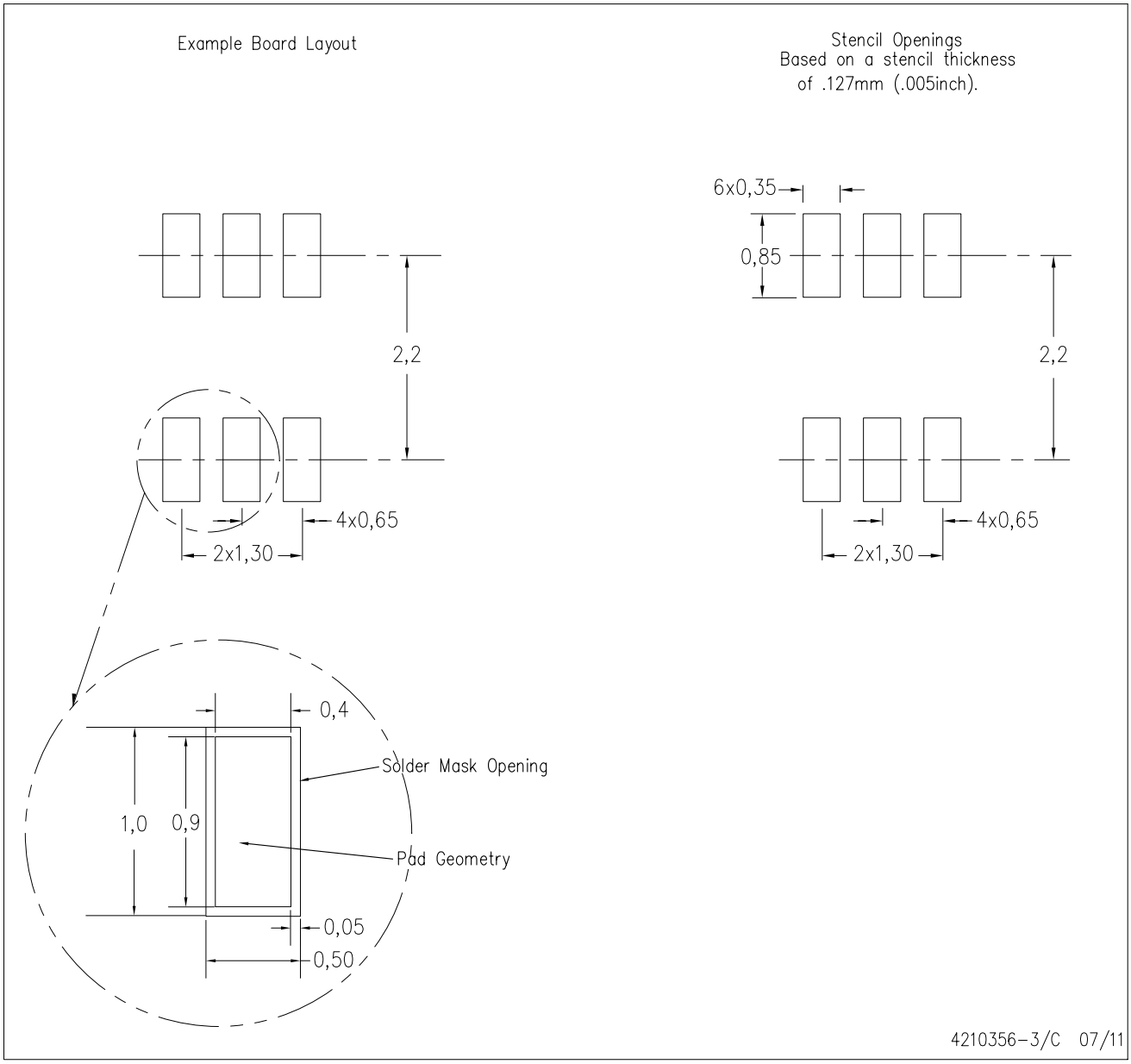

NOTES:
A. All linear dimensions are in millimeters.
B. This drawing is subject to change without notice.
C. Customers should place a note on the circuit board fabrication drawing not to alter the center solder mask defined pad.
D. Publication IPC-7351 is recommended for alternate designs.
E. Laser cutting apertures with trapezoidal walls and also rounding corners will offer better paste release. Customers should contact their board assembly site for stencil design recommendations. Example stencil design based on a 50% volumetric metal load solder paste. Refer to IPC-7525 for other stencil recommendations.

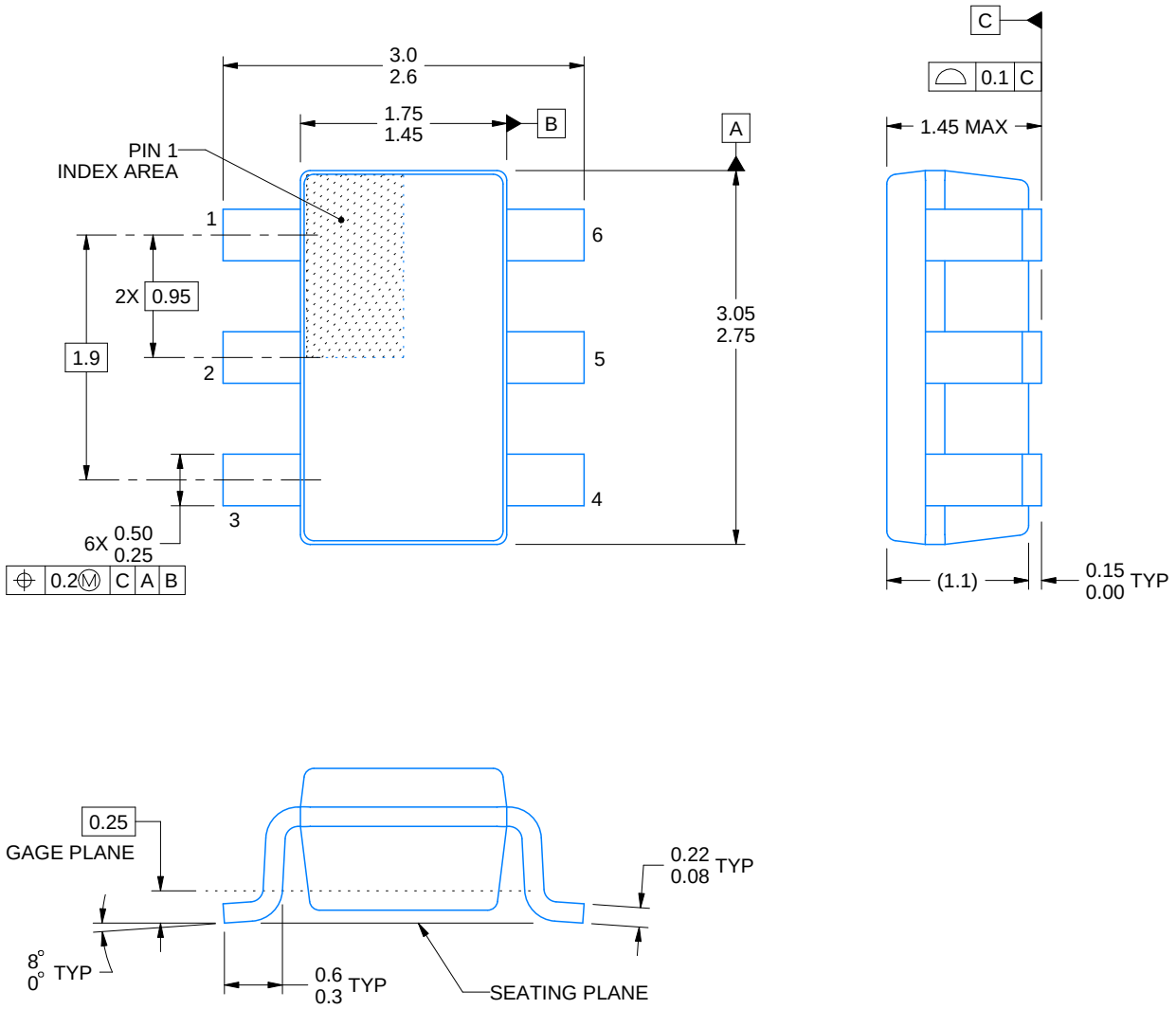

4214840/C 06/2021

NOTES:

1. All linear dimensions are in millimeters. Any dimensions in parenthesis are for reference only. Dimensioning and tolerancing per ASME Y14.5M.
2. This drawing is subject to change without notice.
3. Body dimensions do not include mold flash or protrusion. Mold flash and protrusion shall not exceed 0.25 per side.
4. Leads 1,2,3 may be wider than leads 4,5,6 for package orientation.
5. Refernce JEDEC MO-178.

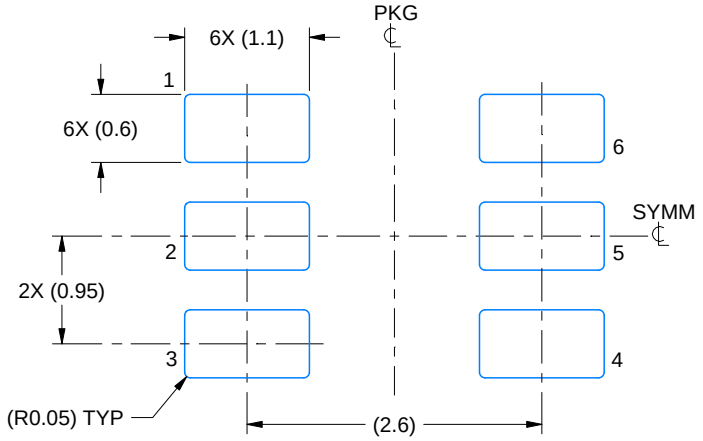

LAND PATTERN EXAMPLE
EXPOSED METAL SHOWN
SCALE:15X

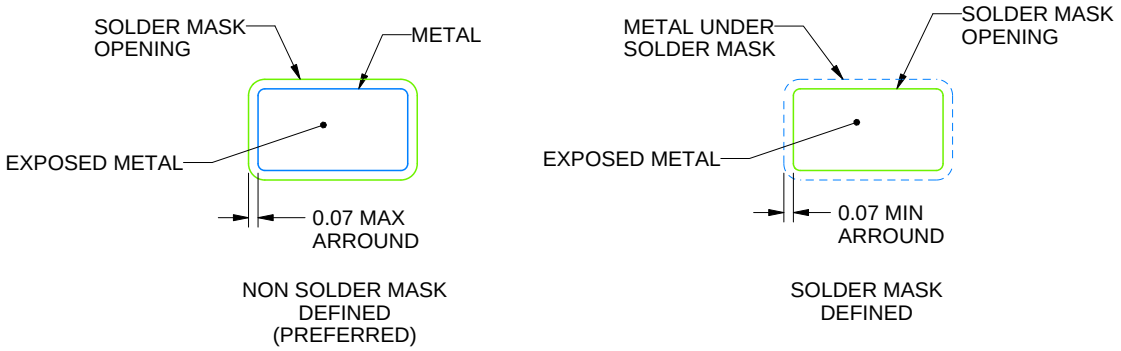

SOLDER MASK DETAILS

4214840/C 06/2021

NOTES: (continued)

6. Publication IPC-7351 may have alternate designs.
7. Solder mask tolerances between and around signal pads can vary based on board fabrication site.

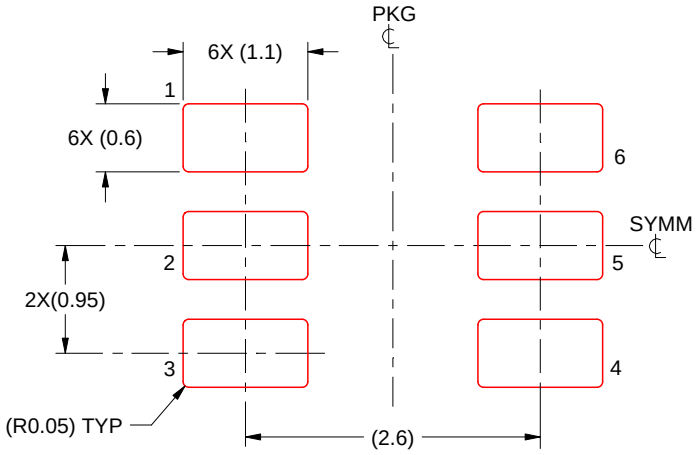

SOLDER PASTE EXAMPLE
BASED ON 0.125 mm THICK STENCIL
SCALE:15X

4214840/C 06/2021

NOTES: (continued)

8. Laser cutting apertures with trapezoidal walls and rounded corners may offer better paste release. IPC-7525 may have alternate design recommendations.
9. Board assembly site may have different recommendations for stencil design.

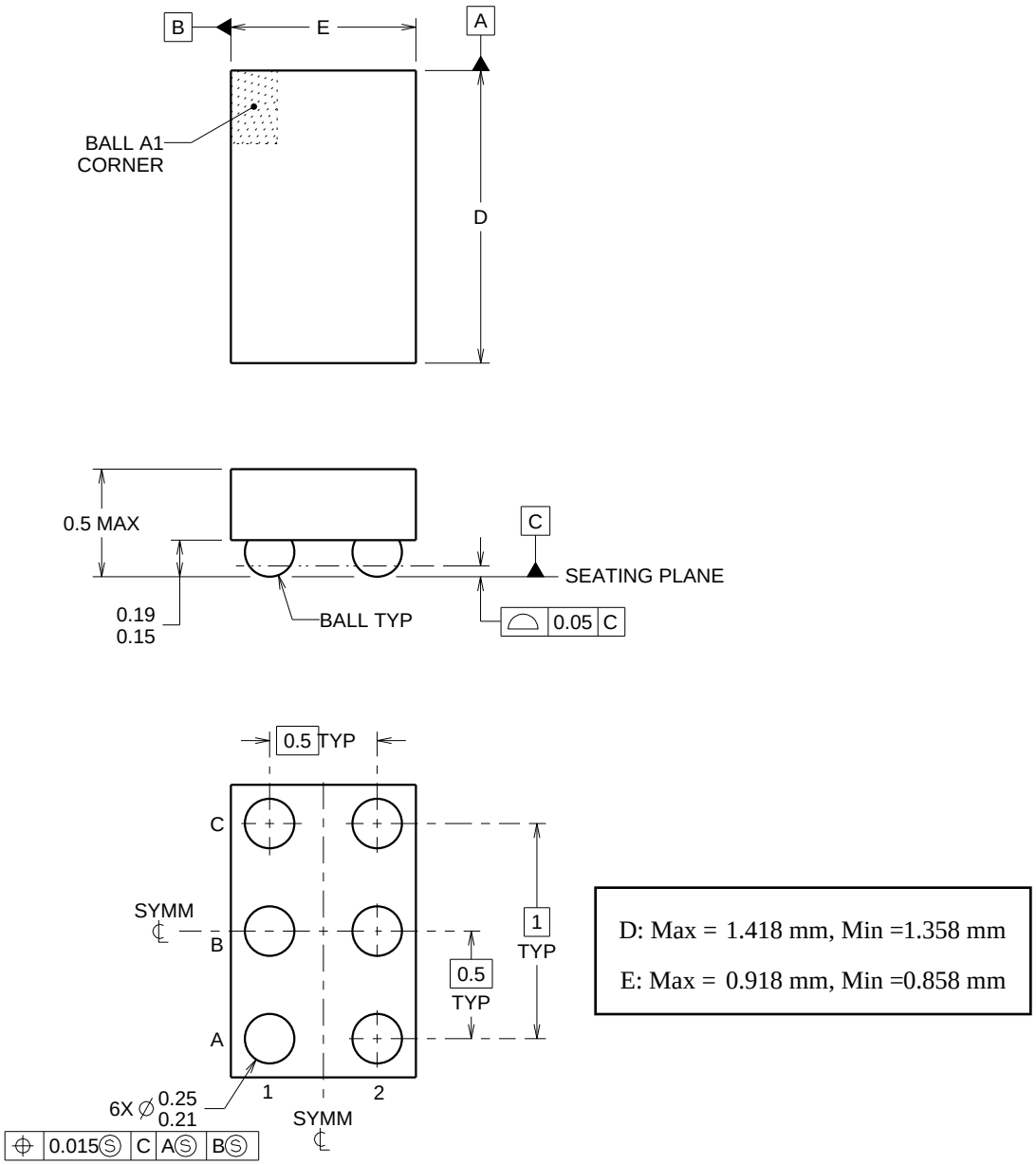

4219524/A 06/2014

NanoFree Is a trademark of Texas Instruments.

NOTES:

1. All linear dimensions are in millimeters. Any dimensions in parenthesis are for reference only. Dimensioning and tolerancing per ASME Y14.5M.
2. This drawing is subject to change without notice.
3. NanoFree™ package configuration.

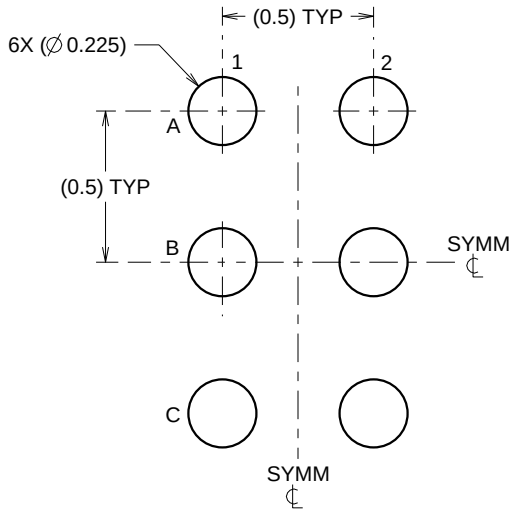

LAND PATTERN EXAMPLE
SCALE:40X

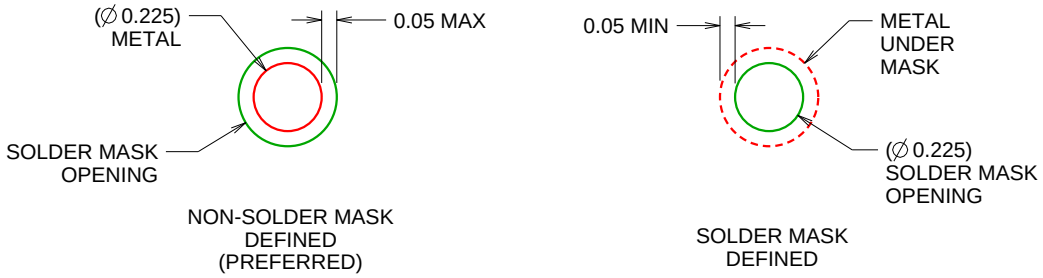

SOLDER MASK DETAILS
NOT TO SCALE

4219524/A 06/2014

NOTES: (continued)

4. Final dimensions may vary due to manufacturing tolerance considerations and also routing constraints.
   For more information, see Texas Instruments literature number SBVA017 (www.ti.com/lit/sbva017).

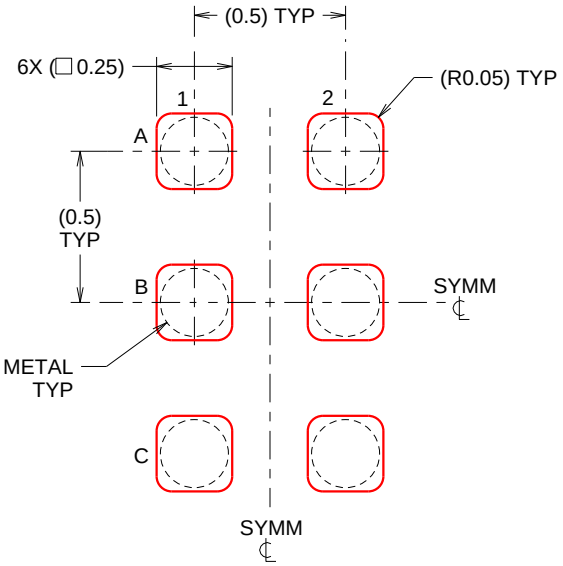

SOLDER PASTE EXAMPLE
BASED ON 0.1 mm THICK STENCIL
SCALE:40X

4219524/A 06/2014

NOTES: (continued)

5. Laser cutting apertures with trapezoidal walls and rounded corners may offer better paste release.

IMPORTANT NOTICE AND DISCLAIMER

TI PROVIDES TECHNICAL AND RELIABILITY DATA (INCLUDING DATA SHEETS), DESIGN RESOURCES (INCLUDING REFERENCE DESIGNS), APPLICATION OR OTHER DESIGN ADVICE, WEB TOOLS, SAFETY INFORMATION, AND OTHER RESOURCES “AS IS” AND WITH ALL FAULTS, AND DISCLAIMS ALL WARRANTIES, EXPRESS AND IMPLIED, INCLUDING WITHOUT LIMITATION ANY IMPLIED WARRANTIES OF MERCHANTABILITY, FITNESS FOR A PARTICULAR PURPOSE OR NON-INFRINGEMENT OF THIRD PARTY INTELLECTUAL PROPERTY RIGHTS.

These resources are intended for skilled developers designing with TI products. You are solely responsible for (1) selecting the appropriate TI products for your application, (2) designing, validating and testing your application, and (3) ensuring your application meets applicable standards, and any other safety, security, regulatory or other requirements.

These resources are subject to change without notice. TI grants you permission to use these resources only for development of an application that uses the TI products described in the resource. Other reproduction and display of these resources is prohibited. No license is granted to any other TI intellectual property right or to any third party intellectual property right. TI disclaims responsibility for, and you will fully indemnify TI and its representatives against, any claims, damages, costs, losses, and liabilities arising out of your use of these resources.

TI’s products are provided subject to TI’s Terms of Sale or other applicable terms available either on ti.com or provided in conjunction with such TI products. TI’s provision of these resources does not expand or otherwise alter TI’s applicable warranties or warranty disclaimers for TI products.

TI objects to and rejects any additional or different terms you may have proposed.

Mailing Address: Texas Instruments, Post Office Box 655303, Dallas, Texas 75265
Copyright © 2022, Texas Instruments Incorporated