SN74AHCT16244 16-Bit Buffers/Drivers With 3-State Outputs

1 Features

- Members of the Texas Instruments *Widebus*™ Family
- *EPIC*™ (Enhanced-Performance Implanted CMOS) Process
- Inputs are TTL-Voltage Compatible
- Distributed V_{CC} and GND Pins Minimize High-Speed Switching Noise
- Flow-Through Architecture Optimizes PCB Layout
- Latch-Up Performance Exceeds 250 mA Per JESD 17
- ESD Protection Exceeds 2000 V Per MIL-STD-883, Method 3015
- Package Options Include:
  - Plastic Shrink Small Outline (DL) Package
  - Thin Shrink Small Outline (DGG) Package
  - Thin Very Small Outline (DGV) Package
  - 380-mil Fine-Pitch Ceramic Flat (WD) Package Using 25-mil Center-to-Center Spacings

2 Applications

- Telecom Infrastructure
- Wireless Infrastructure
- Electronic Points of Sale
- Health and Fitness
- Printers and Other Peripherals
- Motor Drives

3 Description

The SN74AHCT16244 device is a 16-bit buffer and line driver specifically designed to improve the performance and density of 3-state memory address drivers, clock drivers, and bus-oriented receivers and transmitters.

Device Information(1)

PART NUMBER	PACKAGE	BODY SIZE (NOM)
SN74AHCT16244	TSSOP (48)	12.50 mm x 6.10 mm
	TVSOP (48)	9.70 mm x 4.40 mm
	SSOP (48)	15.80 mm x 7.50 mm

(1) For all available packages, see the orderable addendum at the end of the data sheet.

4 Simplified Schematic

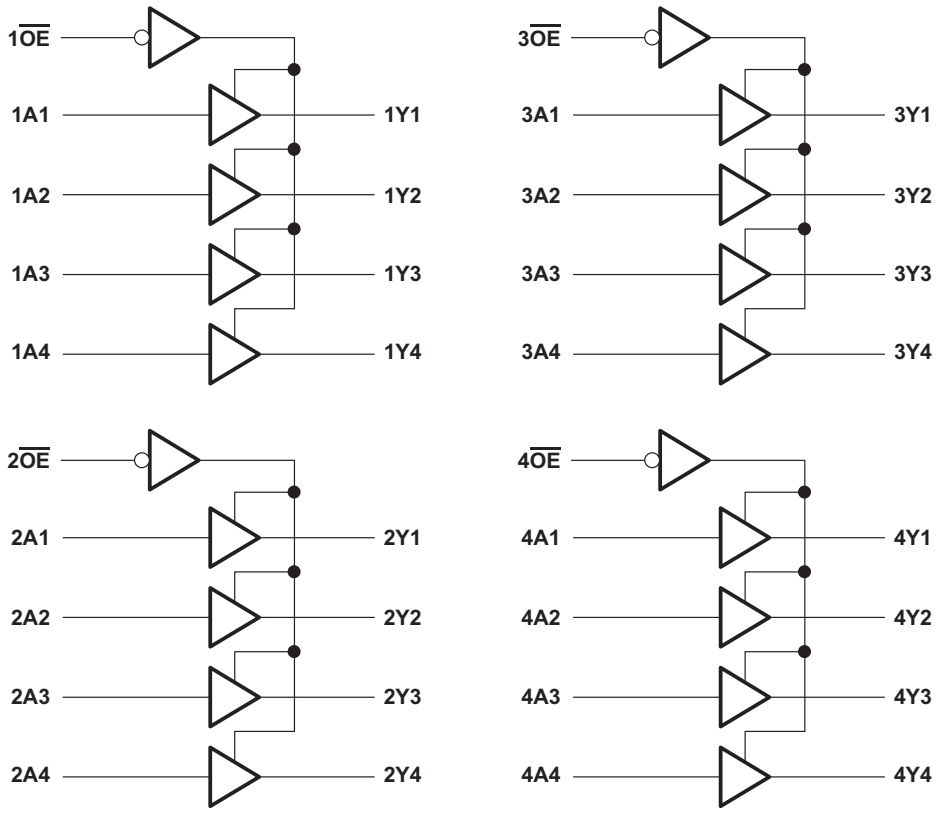

An IMPORTANT NOTICE at the end of this data sheet addresses availability, warranty, changes, use in safety-critical applications, intellectual property matters and other important disclaimers. PRODUCTION DATA.

Table of Contents

1 Features ... 1
2 Applications ... 1
3 Description ... 1
4 Simplified Schematic ... 1
5 Revision History ... 2
6 Pin Configuration and Functions ... 3
7 Specifications ... 5
7.1 Absolute Maximum Ratings ... 5
7.2 Handling Ratings ... 5
7.3 Recommended Operating Conditions ... 5
7.4 Thermal Information ... 6
7.5 Electrical Characteristics ... 6
7.6 Switching Characteristics, V_{CC} = 5 V ± 0.5 V ... 6
7.7 Noise Characteristics ... 7
7.8 Operating Characteristics ... 7
7.9 Typical Characteristics ... 7
8 Parameter Measurement Information ... 8
9 Detailed Description ... 9
9.1 Overview ... 9
9.2 Functional Block Diagram ... 9
9.3 Feature Description ... 9
9.4 Device Functional Modes ... 9
10 Application and Implementation ... 10
10.1 Application Information ... 10
10.2 Typical Application ... 10
11 Power Supply Recommendations ... 11
12 Layout ... 11
12.1 Layout Guidelines ... 11
12.2 Layout Example ... 11
13 Device and Documentation Support ... 12
13.1 Trademarks ... 12
13.2 Electrostatic Discharge Caution ... 12
13.3 Glossary ... 12
14 Mechanical, Packaging, and Orderable Information ... 12

5 Revision History

Changes from Revision I (January 2000) to Revision J	Page
• Updated document to new TI data sheet format.	1
• Deleted Ordering Information table.	1
• Deleted SN54AHCT16244 device from data sheet.	1
• Added Applications.	1
• Added Pin Functions table.	3
• Added Handling Ratings table.	5
• Changed MAX operating temperature to 125°C in Recommended Operating Conditions table.	5
• Added Thermal Information table.	6
• Added –40°C to 125°C range for SN74AHCT16244 in Electrical Characteristics table.	6
• Added T_A = –40°C to 125°C for SN74AHCT16244 in the Switching Characteristics table.	6
• Added Typical Characteristics.	7
• Added Detailed Description section.	9
• Added Application and Implementation section.	10
• Added Power Supply Recommendations and Layout sections.	11

Copyright © 1996–2014, Texas Instruments Incorporated

6 Pin Configuration and Functions

SN74AHCT16244 . . DGG, DGV, OR DL PACKAGE
(TOP VIEW)

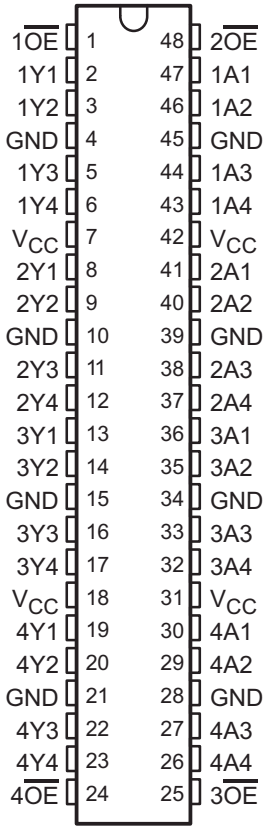

Pin Functions

PIN		I/O	DESCRIPTION
NO.	NAME		
1	$1\overline{OE}$	I	Output Enable 1
2	1Y1	O	1Y1 Output
3	1Y2	O	1Y2 Output
4	GND	—	Ground Pin
5	1Y3	O	1Y3 Output
6	1Y4	O	1Y4 Output
7	V_{CC}	—	Power Pin
8	2Y1	O	2Y1 Output
9	2Y2	O	2Y2 Output
10	GND	—	Ground Pin
11	2Y3	O	2Y3 Output
12	2Y4	O	2Y4 Output
13	3Y1	O	3Y1 Output
14	3Y2	O	3Y2 Output
15	GND	—	Ground Pin
16	3Y3	O	3Y3 Output
17	3Y4	O	3Y4 Output
18	V_{CC}	—	Power Pin

Copyright © 1996–2014, Texas Instruments Incorporated

Pin Functions (continued)

PIN		I/O	DESCRIPTION
NO.	NAME		
19	4Y1	O	4Y1 Output
20	4Y2	O	4Y2 Output
21	GND	—	Ground Pin
22	4Y3	O	4Y3 Output
23	4Y4	O	4Y4 Output
24	$4\overline{OE}$	I	Output Enable 4
25	$3\overline{OE}$	I	Output Enable 3
26	4A4	I	4A4 Input
27	4A3	I	4A3 Input
28	GND	—	Ground Pin
29	4A2	I	4A2 Input
30	4A1	I	4A1 Input
31	V_{CC}	—	Power Pin
32	3A4	I	3A4 Input
33	3A3	I	3A3 Input
34	GND	—	Ground Pin
35	3A2	I	3A2 Input
36	3A1	I	3A1 Input
37	2A4	I	2A4 Input
38	2A3	I	2A3 Input
39	GND	—	Ground Pin
40	2A2	I	2A2 Input
41	2A1	I	2A1 Input
42	V_{CC}	—	Power Pin
43	1A4	I	1A4 Input
44	1A3	I	1A3 Input
45	GND	—	Ground Pin
46	1A2	I	1A2 Input
47	1A1	I	1A1 Input
48	$2\overline{OE}$	I	Output Enable 2

Copyright © 1996–2014, Texas Instruments Incorporated

7 Specifications

7.1 Absolute Maximum Ratings[(1)]

over operating free-air temperature range (unless otherwise noted)

			MIN	MAX	UNIT
V_{CC}	Supply voltage range		–0.5	7	V
V_I	Input voltage range[(2)]		–0.5	7	V
V_O	Output voltage range[(2)]		–0.5	V_{CC} + 0.5	V
I_{IK}	Input clamp current	$V_I < 0$		–20	mA
I_{OK}	Output clamp current	$V_O < 0$ or $V_O > V_{CC}$		±20	mA
I_O	Continuous output current	$V_O = 0$ to V_{CC}		±25	mA
	Continuous current through V_{CC} or GND			±75	mA

(1) Stresses beyond those listed under *Absolute Maximum Ratings* may cause permanent damage to the device. These are stress ratings only, and functional operation of the device at these or any other conditions beyond those indicated under *Recommended Operating Conditions* is not implied. Exposure to absolute-maximum-rated conditions for extended periods may affect device reliability.
(2) The input and output voltage ratings may be exceeded if the input and output current ratings are observed.

7.2 Handling Ratings

			MIN	MAX	UNIT
T_{stg}	Storage temperature range		–65	150	°C
$V_{(ESD)}$	Electrostatic discharge	Human body model (HBM), per ANSI/ESDA/JEDEC JS-001, all pins[(1)]	0	2000	V
		Charged device model (CDM), per JEDEC specification JESD22-C101, all pins[(2)]	0	2000	

(1) JEDEC document JEP155 states that 500-V HBM allows safe manufacturing with a standard ESD control process.
(2) JEDEC document JEP157 states that 250-V CDM allows safe manufacturing with a standard ESD control process.

7.3 Recommended Operating Conditions

over operating free-air temperature range (unless otherwise noted)[(1)]

		SN74AHCT16244		UNIT
		MIN	MAX	
V_{CC}	Supply voltage	4.5	5.5	V
V_{IH}	High-level input voltage	2		V
V_{IL}	Low-level input voltage		0.8	V
V_I	Input voltage	0	5.5	V
V_O	Output voltage	0	V_{CC}	V
I_{OH}	High-level output current		–8	mA
I_{OL}	Low-level output current		8	mA
$\Delta t/\Delta v$	Input transition rise or fall rate		20	ns/V
T_A	Operating free-air temperature	–40	125	°C

(1) All unused inputs of the device must be held at V_{CC} or GND to ensure proper device operation. Refer to the TI application report, *Implications of Slow or Floating CMOS Inputs* (SCBA004).

Copyright © 1996–2014, Texas Instruments Incorporated

7.4 Thermal Information

THERMAL METRIC[1]		SN74AHCT16244			UNIT
		DGG	DGV	DL	
		48 PINS	48 PINS	48 PINS	
$R_{\theta JA}$	Junction-to-ambient thermal resistance	72.5	83.5	64.6	°C/W
$R_{\theta JC(top)}$	Junction-to-case (top) thermal resistance	26.8	35.7	34.5	
$R_{\theta JB}$	Junction-to-board thermal resistance	39.4	46.6	36.4	
ψ_{JT}	Junction-to-top characterization parameter	2.6	4.3	11.1	
ψ_{JB}	Junction-to-board characterization parameter	39.1	46.0	36.1	

(1) For more information about traditional and new thermal metrics, see the *IC Package Thermal Metrics* application report (SPRA953).

7.5 Electrical Characteristics

over recommended operating free-air temperature range (unless otherwise noted)

PARAMETER	TEST CONDITIONS	V_{CC}	T_A = 25°C			SN74AHCT16244		–40°C to 125°C SN74AHCT16244		UNIT
			MIN	TYP	MAX	MIN	MAX	MIN	MAX	
V_{OH}	I_{OH} = –50 µA	4.5 V	4.4	4.5		4.4		4.4		V
	I_{OH} = –8 mA		3.94			3.8		3.8		
V_{OL}	I_{OL} = 50 µA	4.5 V			0.1		0.1		0.1	V
	I_{OL} = 8 mA				0.36		0.44		0.44	
I_I	$V_I = V_{CC}$ or GND	0 V to 5.5 V			±0.1		±1		±1	µA
I_{OZ}	$V_O = V_{CC}$ or GND	5.5 V			±0.25		±2.5		±2.5	µA
I_{CC}	$V_I = V_{CC}$ or GND, I_O = 0	5.5 V			4		40		40	µA
ΔI_{CC}[1]	One input at 3.4 V, Other inputs at V_{CC} or GND	5.5 V			1.35		1.5		1.5	mA
C_i	$V_I = V_{CC}$ or GND	5 V		2.5	10		10		10	pF
C_o	$V_O = V_{CC}$ or GND	5 V		3						pF

(1) This is the increase in supply current for each input at one of the specified TTL voltage levels rather than 0 V or V_{CC}.

7.6 Switching Characteristics, V_{CC} = 5 V ± 0.5 V

over recommended operating free-air temperature range (unless otherwise noted) (see Figure 2)

PARAMETER	FROM (INPUT)	TO (OUTPUT)	LOAD CAPACITANCE	T_A = 25°C		SN74AHCT16244		T_A = –40°C to 125°C SN74AHCT16244		UNIT
				TYP	MAX	MIN	MAX	MIN	MAX	
t_{PLH}	A	Y	C_L = 15 pF	5.4[1]	8.5[1]	1	9.5	1	10.5	ns
t_{PHL}				5.4[1]	8.5[1]	1	9.5	1	10.5	
t_{PZH}	$\overline{OE}$	Y	C_L = 15 pF	7.7[1]	10.4[1]	1	12	1	13	ns
t_{PZL}				7.7[1]	10.4[1]	1	12	1	13	
t_{PHZ}	$\overline{OE}$	Y	C_L = 15 pF	5[1]	10.4[1]	1	12	1	13	ns
t_{PLZ}				5[1]	10.4[1]	1	12	1	13	
t_{PLH}	A	Y	C_L = 50 pF	7	9.5	1	10.5	1	11.5	ns
t_{PHL}				5.9	9.5	1	10.5	1	11.5	
t_{PZH}	$\overline{OE}$	Y	C_L = 50 pF	8.2	11.4	1	13	1	14.5	ns
t_{PZL}				8.2	11.4	1	13	1	14.5	
t_{PHZ}	$\overline{OE}$	Y	C_L = 50 pF	8.8	11.4	1	13	1	14	ns
t_{PLZ}				8.8	11.4	1	13	1	14	
$t_{sk(o)}$			C_L = 50 pF		1[2]		1		1	ns

(1) On products compliant to MIL-PRF-38535, this parameter is not production tested.
(2) On products compliant to MIL-PRF-38535, this parameter does not apply.

Copyright © 1996–2014, Texas Instruments Incorporated

7.7 Noise Characteristics

V_{CC} = 5 V, C_L = 50 pF, T_A = 25°C(1)

PARAMETER		SN74AHCT16244			UNIT
		MIN	TYP	MAX	
$V_{OL(P)}$	Quiet output, maximum dynamic V_{OL}		0.7		V
$V_{OL(V)}$	Quiet output, minimum dynamic V_{OL}		–0.7		V
$V_{OH(V)}$	Quiet output, minimum dynamic V_{OH}		4.8		V
$V_{IH(D)}$	High-level dynamic input voltage	2			V
$V_{IL(D)}$	Low-level dynamic input voltage			0.8	V

(1) Characteristics are for surface-mount packages only.

7.8 Operating Characteristics

V_{CC} = 5 V, T_A = 25°C

PARAMETER		TEST CONDITIONS		TYP	UNIT
C_{pd}	Power dissipation capacitance	No load,	f = 1 MHz	8.2	pF

7.9 Typical Characteristics

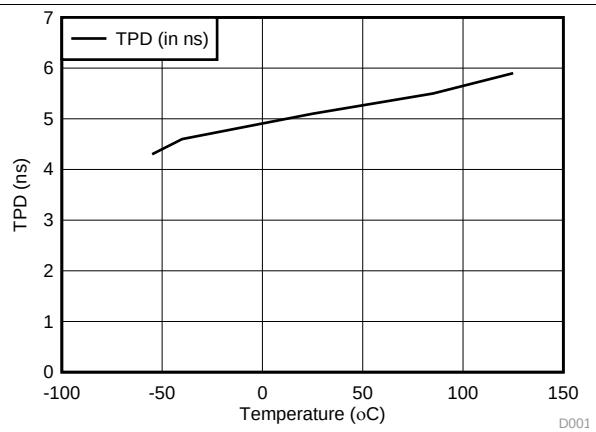

Figure 1. TPD vs Temperature

8 Parameter Measurement Information

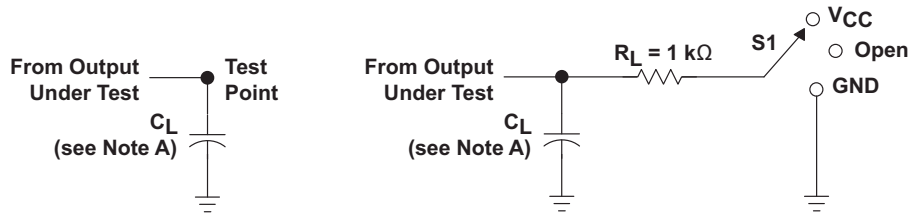

TEST	S1
t_{PLH}/t_{PHL}	Open
t_{PLZ}/t_{PZL}	V_{CC}
t_{PHZ}/t_{PZH}	GND
Open Drain	V_{CC}

LOAD CIRCUIT FOR
TOTEM-POLE OUTPUTS

LOAD CIRCUIT FOR
3-STATE AND OPEN-DRAIN OUTPUTS

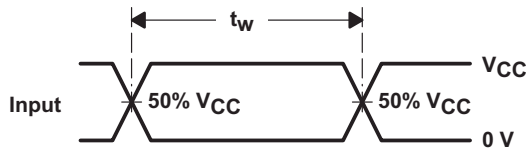

VOLTAGE WAVEFORMS
PULSE DURATION

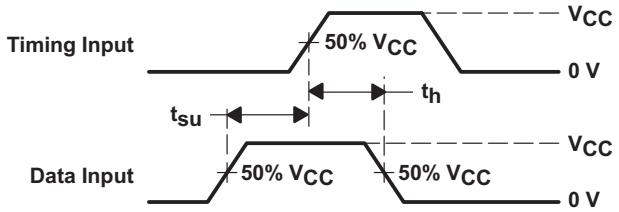

VOLTAGE WAVEFORMS
SETUP AND HOLD TIMES

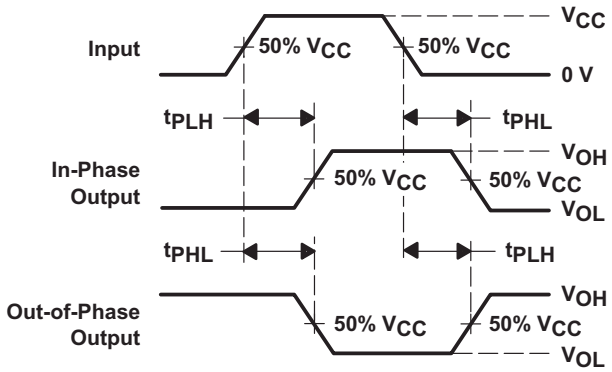

VOLTAGE WAVEFORMS
PROPAGATION DELAY TIMES
INVERTING AND NONINVERTING OUTPUTS

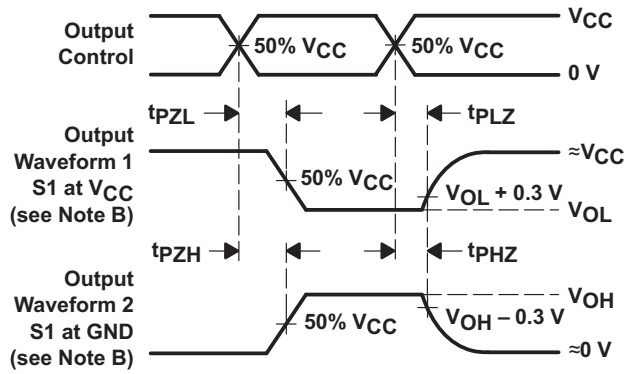

VOLTAGE WAVEFORMS
ENABLE AND DISABLE TIMES
LOW- AND HIGH-LEVEL ENABLING

NOTES: A. C_L includes probe and jig capacitance.
B. Waveform 1 is for an output with internal conditions such that the output is low except when disabled by the output control. Waveform 2 is for an output with internal conditions such that the output is high except when disabled by the output control.
C. All input pulses are supplied by generators having the following characteristics: PRR ≤ 1 MHz, Z_O = 50 Ω, t_r ≤ 3 ns, t_f ≤ 3 ns.
D. The outputs are measured one at a time with one input transition per measurement.

Figure 2. Load Circuit and Voltage Waveforms

Copyright © 1996–2014, Texas Instruments Incorporated

9 Detailed Description

9.1 Overview

The SN74AHCT16244 device is a 16-bit buffer and line driver specifically designed to improve the performance and density of 3-state memory address drivers, clock drivers, and bus-oriented receivers and transmitters. This device can be used as a four 4-bit buffers, two 8-bit buffers, or one 16-bit buffer. It provides true outputs and symmetrical active-low output-enable ($\overline{OE}$) inputs. To ensure the high-impedance state during power up or power down, $\overline{OE}$ should be tied to V_{CC} through a pullup resistor. The minimum value of the resistor is determined by the current-sinking capability of the driver. The SN74AHCT16244 is characterized for operation from –40°C to 125°C.

9.2 Functional Block Diagram

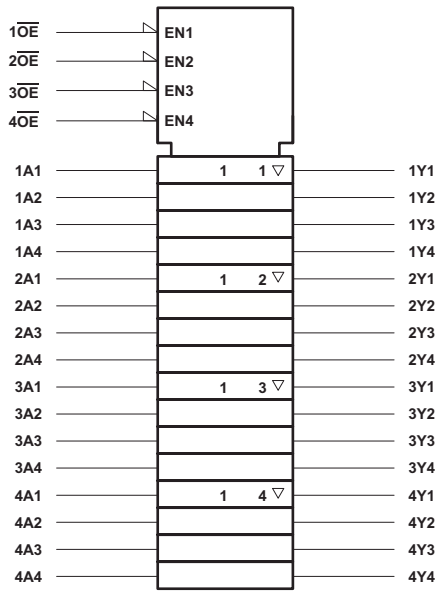

This symbol is in accordance with ANSI/IEEE Std 91-1984 and IEC Publication 617-12.

Figure 3.

9.3 Feature Description

- V_{CC} is optimized at 5 V
- Allows up voltage translation from 3.3 V to 5 V
  - Inputs accept V_{IH} levels of 2 V
- Slow edge rates minimize output ringing
- Inputs are TTL-voltage compatible

9.4 Device Functional Modes

Table 1. Function Table (Each 4-bit Buffer/Driver)

INPUTS		OUTPUT Y
$\overline{OE}$	A	
L	H	H
L	L	L
H	X	Z

10 Application and Implementation

NOTE

Information in the following applications sections is not part of the TI component specification, and TI does not warrant its accuracy or completeness. TI's customers are responsible for determining suitability of components for their purposes. Customers should validate and test their design implementation to confirm system functionality.

10.1 Application Information

The SN74HCT16244 is a low-drive CMOS device that can be used for a multitude of bus interface type applications where output ringing is a concern. The low drive and slow edge rates will minimize overshoot and undershoot on the outputs. The input switching levels have been lowered to accommodate TTL inputs of 0.8-V V_{IL} and 2-V V_{IH}. This feature makes it ideal for translating up from 3.3 V to 5 V. The figure below shows this type of translation

10.2 Typical Application

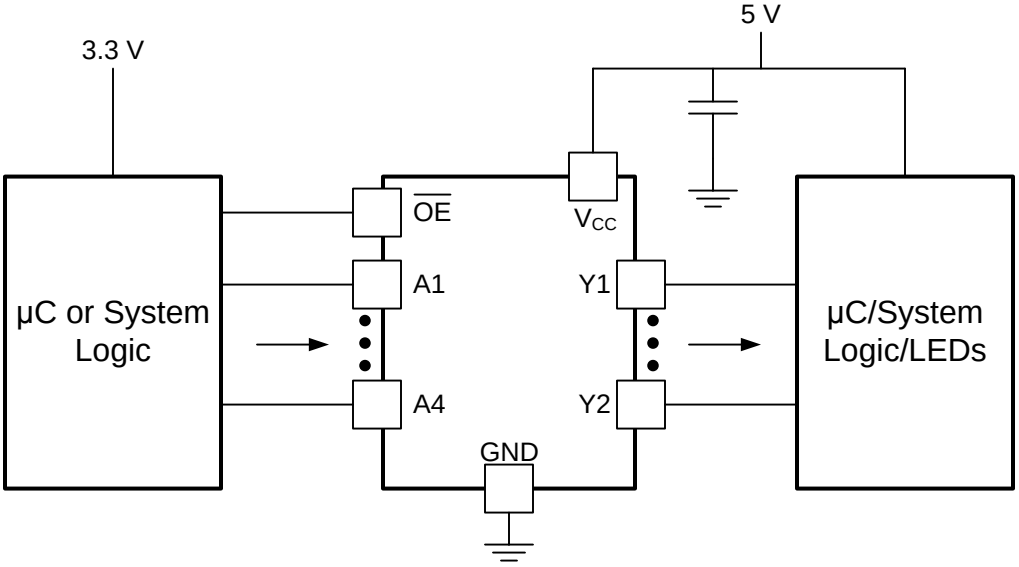

Figure 4. Typical Application Schematic

10.2.1 Design Requirements

This device uses CMOS technology and has balanced output drive. Care should be taken to avoid bus contention because it can drive currents that would exceed maximum limits. The high drive will also create fast edges into light loads, so routing and load conditions should be considered to prevent ringing.

10.2.2 Detailed Design Procedure

1. Recommended Input Conditions:
   - For rise time and fall time specifications, see Δt/ΔV in the *Recommended Operating Conditions* table.
   - For specified high and low levels, see V_{IH} and V_{IL} in the *Recommended Operating Conditions* table.
   - Inputs are overvoltage tolerant allowing them to go as high as 5.5 V at any valid V_{CC}.
2. Recommended Output Conditions:
   - Load currents should not exceed 25 mA per output and 75 mA total for the part.
   - Outputs should not be pulled above V_{CC}.

Copyright © 1996–2014, Texas Instruments Incorporated

Typical Application (continued)

10.2.3 Application Curves

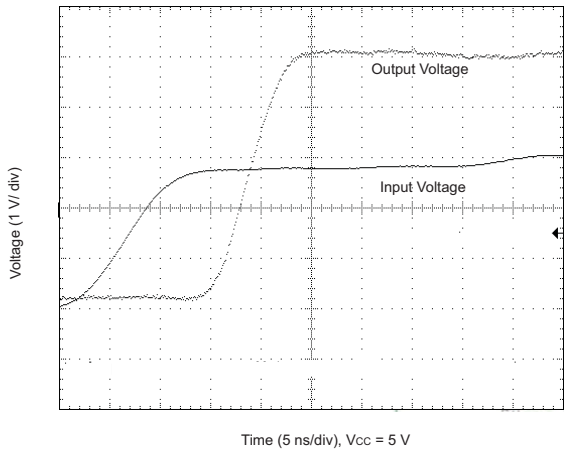

Figure 5. Up Translation

11 Power Supply Recommendations

The power supply can be any voltage between the MIN and MAX supply voltage rating located in the *Recommended Operating Conditions*. Each V_{CC} terminal should have a good bypass capacitor to prevent power disturbance. For devices with a single supply, 0.1 µF is recommended. If there are multiple V_{CC} terminals then 0.01 µF or 0.022 µF is recommended for each power terminal. It is acceptable to parallel multiple bypass caps to reject different frequencies of noise. A 0.1 µF and 1 µF are commonly used in parallel. The bypass capacitor should be installed as close to the power terminal as possible for best results.

12 Layout

12.1 Layout Guidelines

When using multiple bit logic devices, inputs should not float. In many cases, functions or parts of functions of digital logic devices are unused. Some examples are when only two inputs of a triple-input AND gate are used, or when only 3 of the 4-buffer gates are used. Such input pins should not be left unconnected because the undefined voltages at the outside connections result in undefined operational states.

Specified in Figure 6 are rules that must be observed under all circumstances. All unused inputs of digital logic devices must be connected to a high or low bias to prevent them from floating. The logic level that should be applied to any particular unused input depends on the function of the device. Generally they will be tied to GND or V_{CC}, whichever makes more sense or is more convenient. It is acceptable to float outputs unless the part is a transceiver. If the transceiver has an output enable pin, it will disable the outputs section of the part when asserted. This will not disable the input section of the I/Os so they also cannot float when disabled.

12.2 Layout Example

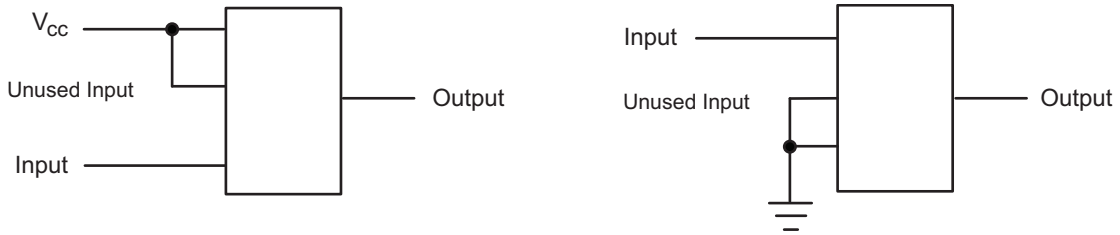

Figure 6. Layout Diagram

13 Device and Documentation Support

13.1 Trademarks

Widebus is a trademark of Texas Instruments.
All other trademarks are the property of their respective owners.

13.2 Electrostatic Discharge Caution

These devices have limited built-in ESD protection. The leads should be shorted together or the device placed in conductive foam during storage or handling to prevent electrostatic damage to the MOS gates.

13.3 Glossary

SLYZ022 — *TI Glossary*.

This glossary lists and explains terms, acronyms, and definitions.

14 Mechanical, Packaging, and Orderable Information

The following pages include mechanical, packaging, and orderable information. This information is the most current data available for the designated devices. This data is subject to change without notice and revision of this document. For browser-based versions of this data sheet, refer to the left-hand navigation.

Copyright © 1996–2014, Texas Instruments Incorporated

PACKAGING INFORMATION

Orderable Device	Status (1)	Package Type	Package Drawing	Pins	Package Qty	Eco Plan (2)	Lead finish/ Ball material (6)	MSL Peak Temp (3)	Op Temp (°C)	Device Marking (4/5)	Samples
74AHCT16244DGGRE4	ACTIVE	TSSOP	DGG	48	2000	RoHS & Green	NIPDAU	Level-1-260C-UNLIM	-40 to 125	AHCT16244	Samples
74AHCT16244DGGRG4	ACTIVE	TSSOP	DGG	48	2000	RoHS & Green	NIPDAU	Level-1-260C-UNLIM	-40 to 125	AHCT16244	Samples
74AHCT16244DGVRE4	ACTIVE	TVSOP	DGV	48	2000	RoHS & Green	NIPDAU	Level-1-260C-UNLIM	-40 to 125	HF244	Samples
SN74AHCT16244DGGR	ACTIVE	TSSOP	DGG	48	2000	RoHS & Green	NIPDAU	Level-1-260C-UNLIM	-40 to 125	AHCT16244	Samples
SN74AHCT16244DGVR	ACTIVE	TVSOP	DGV	48	2000	RoHS & Green	NIPDAU	Level-1-260C-UNLIM	-40 to 125	HF244	Samples
SN74AHCT16244DL	ACTIVE	SSOP	DL	48	25	RoHS & Green	NIPDAU	Level-1-260C-UNLIM	-40 to 125	AHCT16244	Samples
SN74AHCT16244DLG4	ACTIVE	SSOP	DL	48	25	RoHS & Green	NIPDAU	Level-1-260C-UNLIM	-40 to 125	AHCT16244	Samples
SN74AHCT16244DLR	ACTIVE	SSOP	DL	48	1000	RoHS & Green	NIPDAU	Level-1-260C-UNLIM	-40 to 125	AHCT16244	Samples

(1) The marketing status values are defined as follows:
ACTIVE: Product device recommended for new designs.
LIFEBUY: TI has announced that the device will be discontinued, and a lifetime-buy period is in effect.
NRND: Not recommended for new designs. Device is in production to support existing customers, but TI does not recommend using this part in a new design.
PREVIEW: Device has been announced but is not in production. Samples may or may not be available.
OBSOLETE: TI has discontinued the production of the device.

(2) **RoHS:** TI defines "RoHS" to mean semiconductor products that are compliant with the current EU RoHS requirements for all 10 RoHS substances, including the requirement that RoHS substance do not exceed 0.1% by weight in homogeneous materials. Where designed to be soldered at high temperatures, "RoHS" products are suitable for use in specified lead-free processes. TI may reference these types of products as "Pb-Free".
RoHS Exempt: TI defines "RoHS Exempt" to mean products that contain lead but are compliant with EU RoHS pursuant to a specific EU RoHS exemption.
Green: TI defines "Green" to mean the content of Chlorine (Cl) and Bromine (Br) based flame retardants meet JS709B low halogen requirements of <=1000ppm threshold. Antimony trioxide based flame retardants must also meet the <=1000ppm threshold requirement.

(3) MSL, Peak Temp. - The Moisture Sensitivity Level rating according to the JEDEC industry standard classifications, and peak solder temperature.

(4) There may be additional marking, which relates to the logo, the lot trace code information, or the environmental category on the device.

(5) Multiple Device Markings will be inside parentheses. Only one Device Marking contained in parentheses and separated by a "~" will appear on a device. If a line is indented then it is a continuation of the previous line and the two combined represent the entire Device Marking for that device.

(6) Lead finish/Ball material - Orderable Devices may have multiple material finish options. Finish options are separated by a vertical ruled line. Lead finish/Ball material values may wrap to two lines if the finish value exceeds the maximum column width.

Important Information and Disclaimer: The information provided on this page represents TI's knowledge and belief as of the date that it is provided. TI bases its knowledge and belief on information provided by third parties, and makes no representation or warranty as to the accuracy of such information. Efforts are underway to better integrate information from third parties. TI has taken and continues to take reasonable steps to provide representative and accurate information but may not have conducted destructive testing or chemical analysis on incoming materials and chemicals. TI and TI suppliers consider certain information to be proprietary, and thus CAS numbers and other limited information may not be available for release.

In no event shall TI's liability arising out of such information exceed the total purchase price of the TI part(s) at issue in this document sold by TI to Customer on an annual basis.

TAPE AND REEL INFORMATION

REEL DIMENSIONS

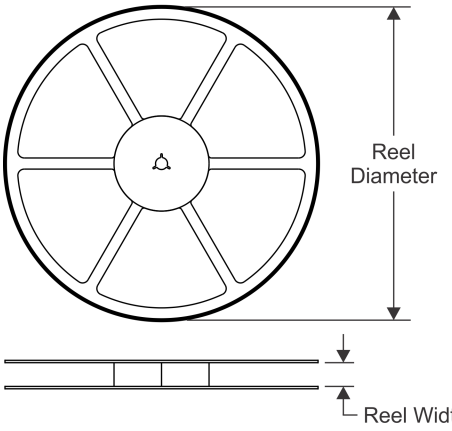

TAPE DIMENSIONS

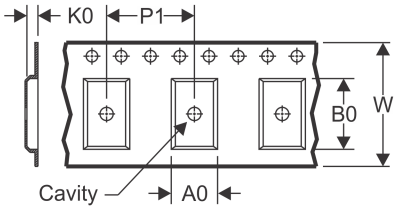

A0	Dimension designed to accommodate the component width
B0	Dimension designed to accommodate the component length
K0	Dimension designed to accommodate the component thickness
W	Overall width of the carrier tape
P1	Pitch between successive cavity centers

QUADRANT ASSIGNMENTS FOR PIN 1 ORIENTATION IN TAPE

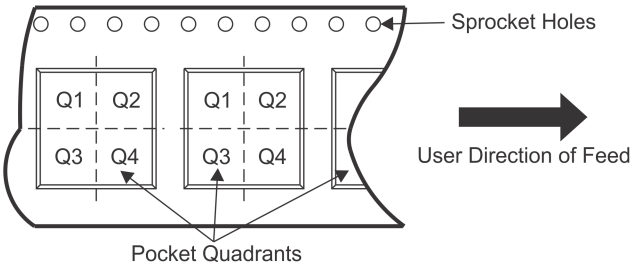

*All dimensions are nominal

Device	Package Type	Package Drawing	Pins	SPQ	Reel Diameter (mm)	Reel Width W1 (mm)	A0 (mm)	B0 (mm)	K0 (mm)	P1 (mm)	W (mm)	Pin1 Quadrant
SN74AHCT16244DGGR	TSSOP	DGG	48	2000	330.0	24.4	8.6	13.0	1.8	12.0	24.0	Q1
SN74AHCT16244DGVR	TVSOP	DGV	48	2000	330.0	16.4	7.1	10.2	1.6	12.0	16.0	Q1
SN74AHCT16244DLR	SSOP	DL	48	1000	330.0	32.4	11.35	16.2	3.1	16.0	32.0	Q1

TAPE AND REEL BOX DIMENSIONS

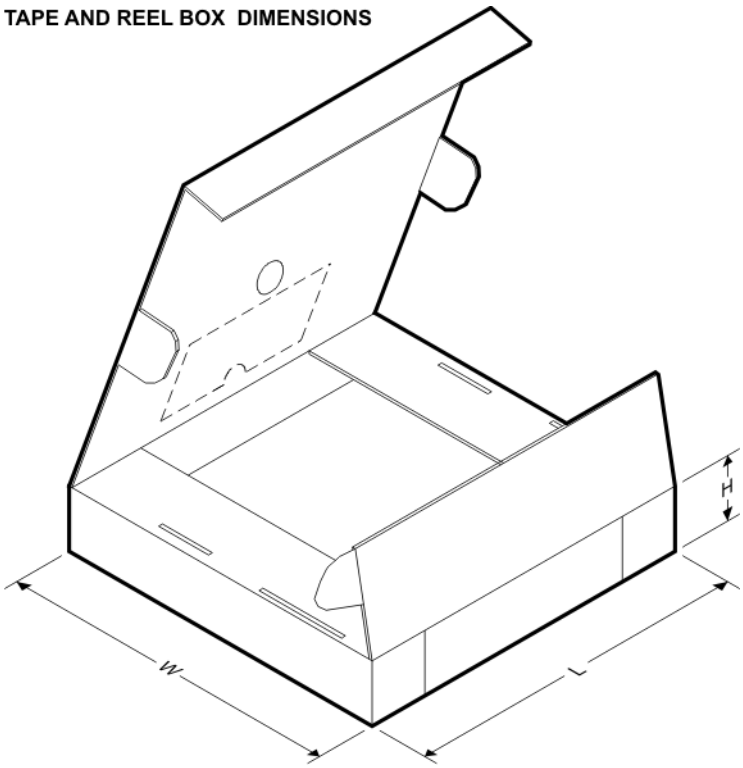

*All dimensions are nominal

Device	Package Type	Package Drawing	Pins	SPQ	Length (mm)	Width (mm)	Height (mm)
SN74AHCT16244DGGR	TSSOP	DGG	48	2000	367.0	367.0	45.0
SN74AHCT16244DGVR	TVSOP	DGV	48	2000	853.0	449.0	35.0
SN74AHCT16244DLR	SSOP	DL	48	1000	367.0	367.0	55.0

TUBE

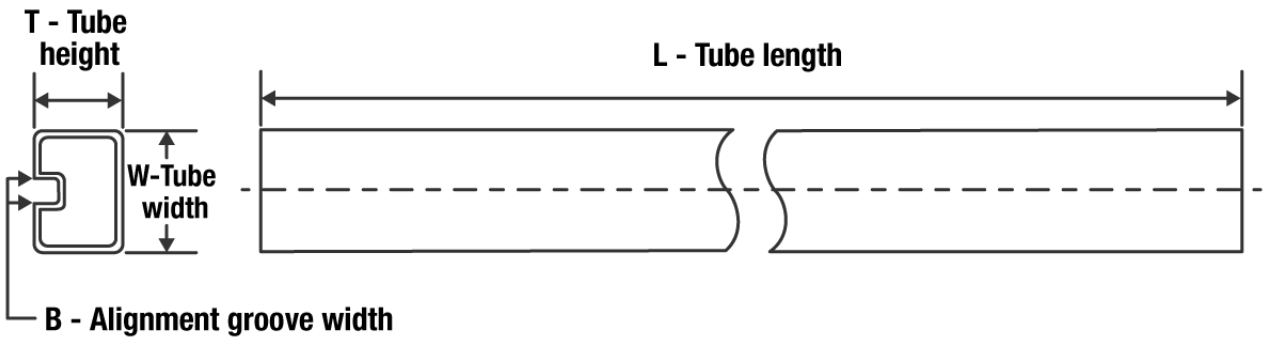

*All dimensions are nominal

Device	Package Name	Package Type	Pins	SPQ	L (mm)	W (mm)	T (µm)	B (mm)
SN74AHCT16244DL	DL	SSOP	48	25	473.7	14.24	5110	7.87
SN74AHCT16244DLG4	DL	SSOP	48	25	473.7	14.24	5110	7.87

DGV (R-PDSO-G)** **PLASTIC SMALL-OUTLINE**

24 PINS SHOWN

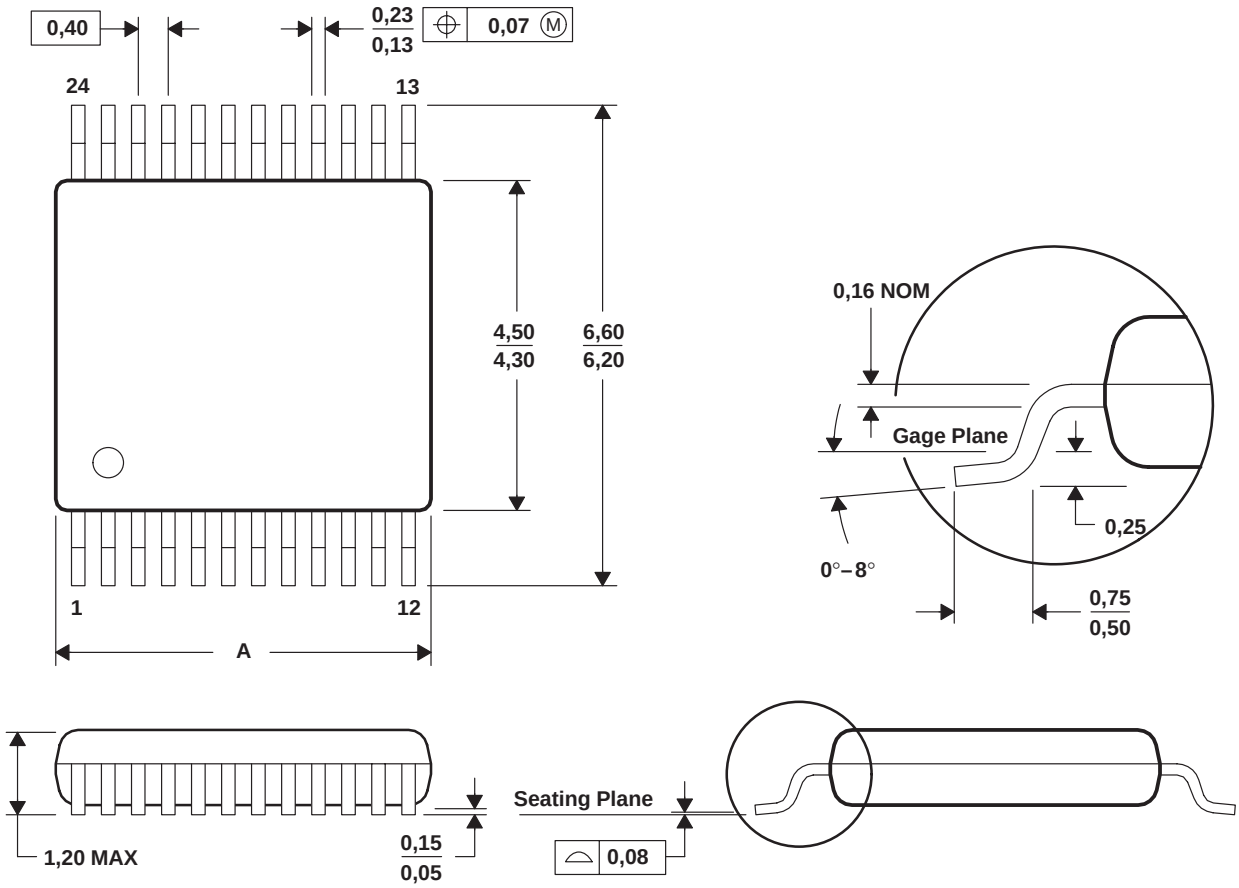

DIM \ PINS **	14	16	20	24	38	48	56
A MAX	3,70	3,70	5,10	5,10	7,90	9,80	11,40
A MIN	3,50	3,50	4,90	4,90	7,70	9,60	11,20

4073251/E 08/00

NOTES: A. All linear dimensions are in millimeters.
B. This drawing is subject to change without notice.
C. Body dimensions do not include mold flash or protrusion, not to exceed 0,15 per side.
D. Falls within JEDEC: 24/48 Pins – MO-153
14/16/20/56 Pins – MO-194

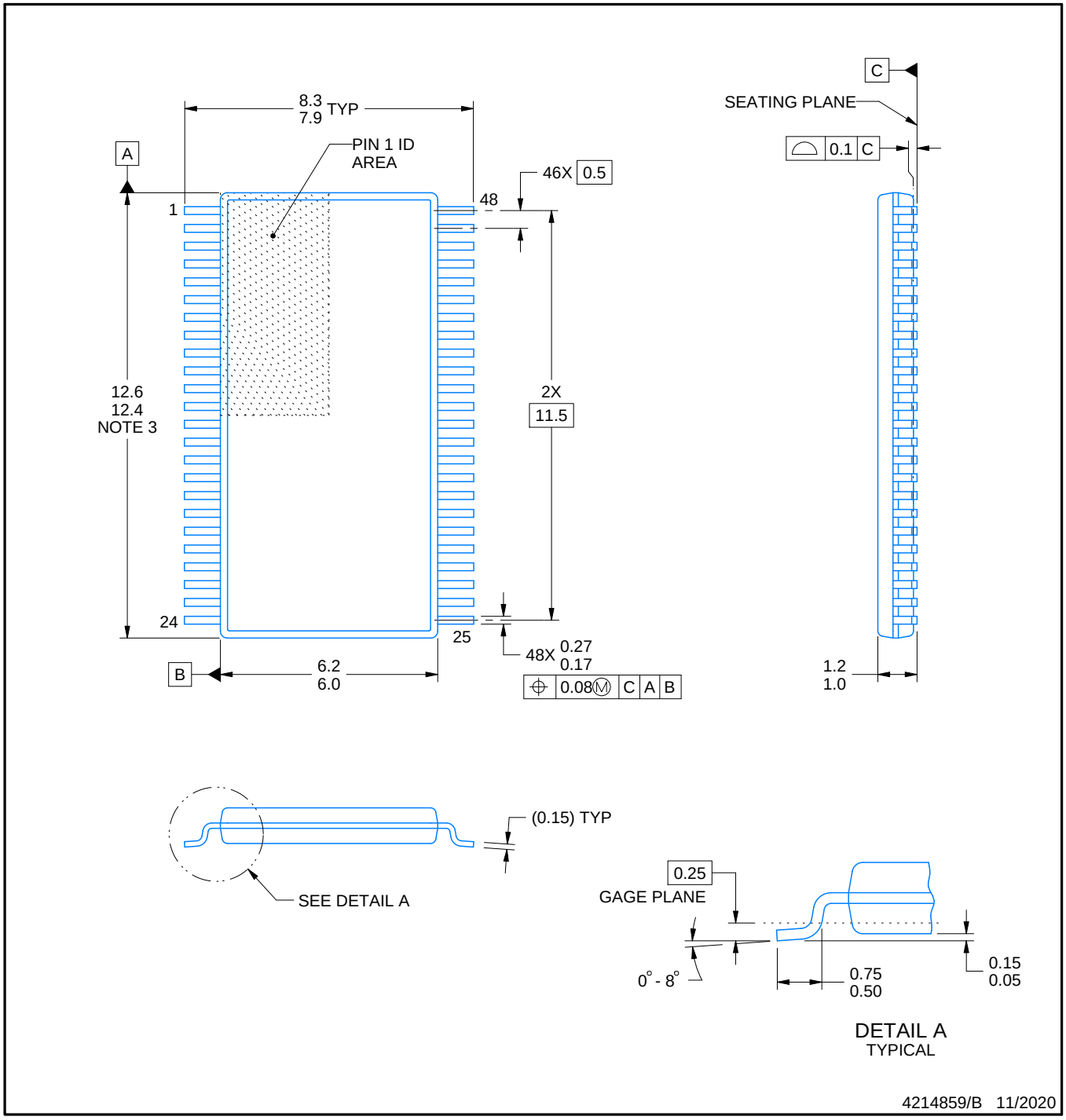

NOTES:

1. All linear dimensions are in millimeters. Any dimensions in parenthesis are for reference only. Dimensioning and tolerancing per ASME Y14.5M.
2. This drawing is subject to change without notice.
3. This dimension does not include mold flash, protrusions, or gate burrs. Mold flash, protrusions, or gate burrs shall not exceed 0.15 mm per side.
4. Reference JEDEC registration MO-153.

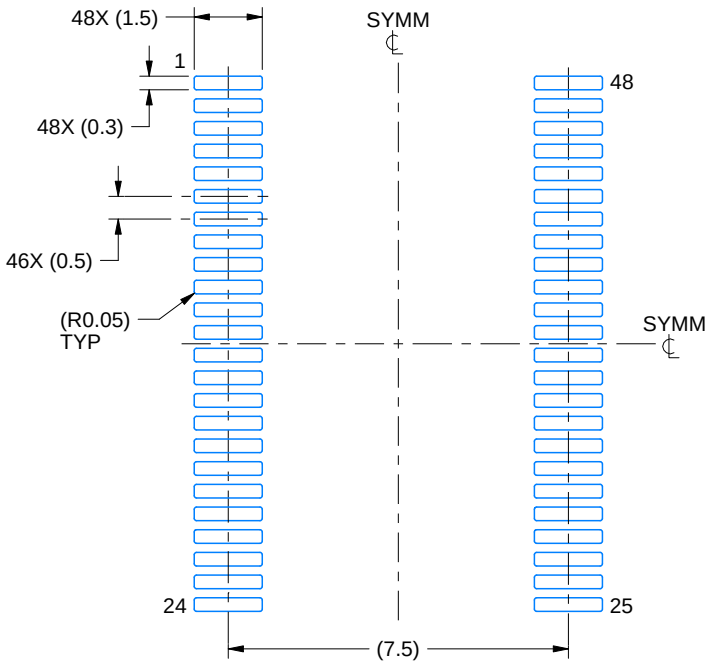

LAND PATTERN EXAMPLE
SCALE:6X

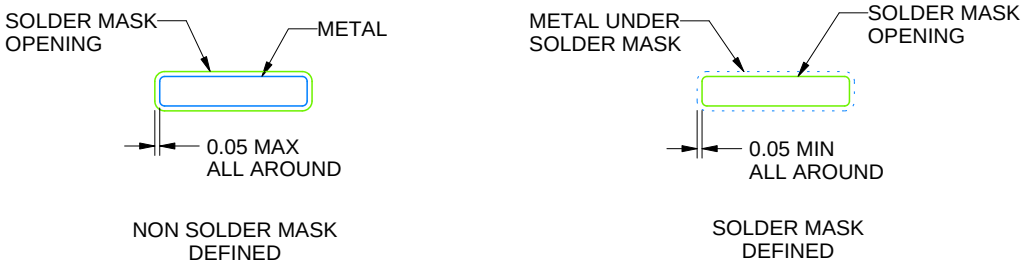

SOLDER MASK DETAILS

4214859/B 11/2020

NOTES: (continued)

5. Publication IPC-7351 may have alternate designs.
6. Solder mask tolerances between and around signal pads can vary based on board fabrication site.

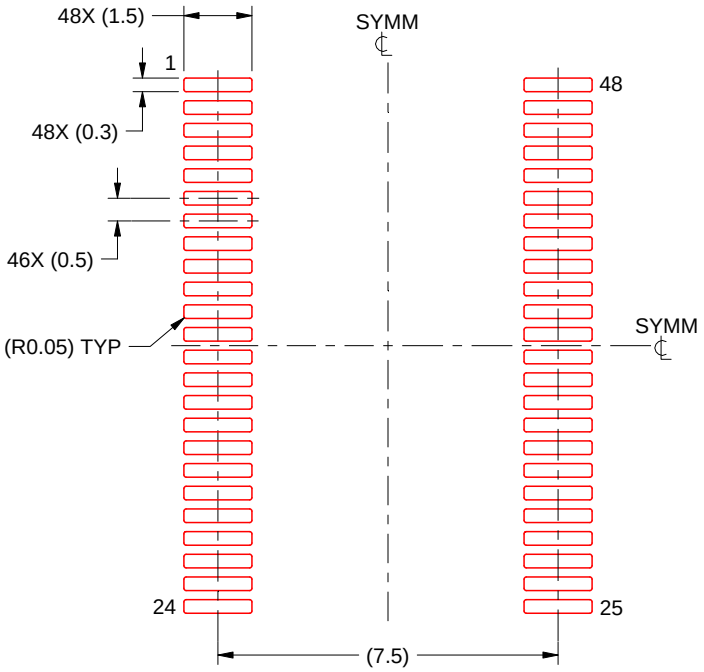

SOLDER PASTE EXAMPLE
BASED ON 0.125 mm THICK STENCIL
SCALE:6X

4214859/B 11/2020

NOTES: (continued)

7. Laser cutting apertures with trapezoidal walls and rounded corners may offer better paste release. IPC-7525 may have alternate design recommendations.
8. Board assembly site may have different recommendations for stencil design.

DGG (R-PDSO-G)** **PLASTIC SMALL-OUTLINE PACKAGE**

48 PINS SHOWN

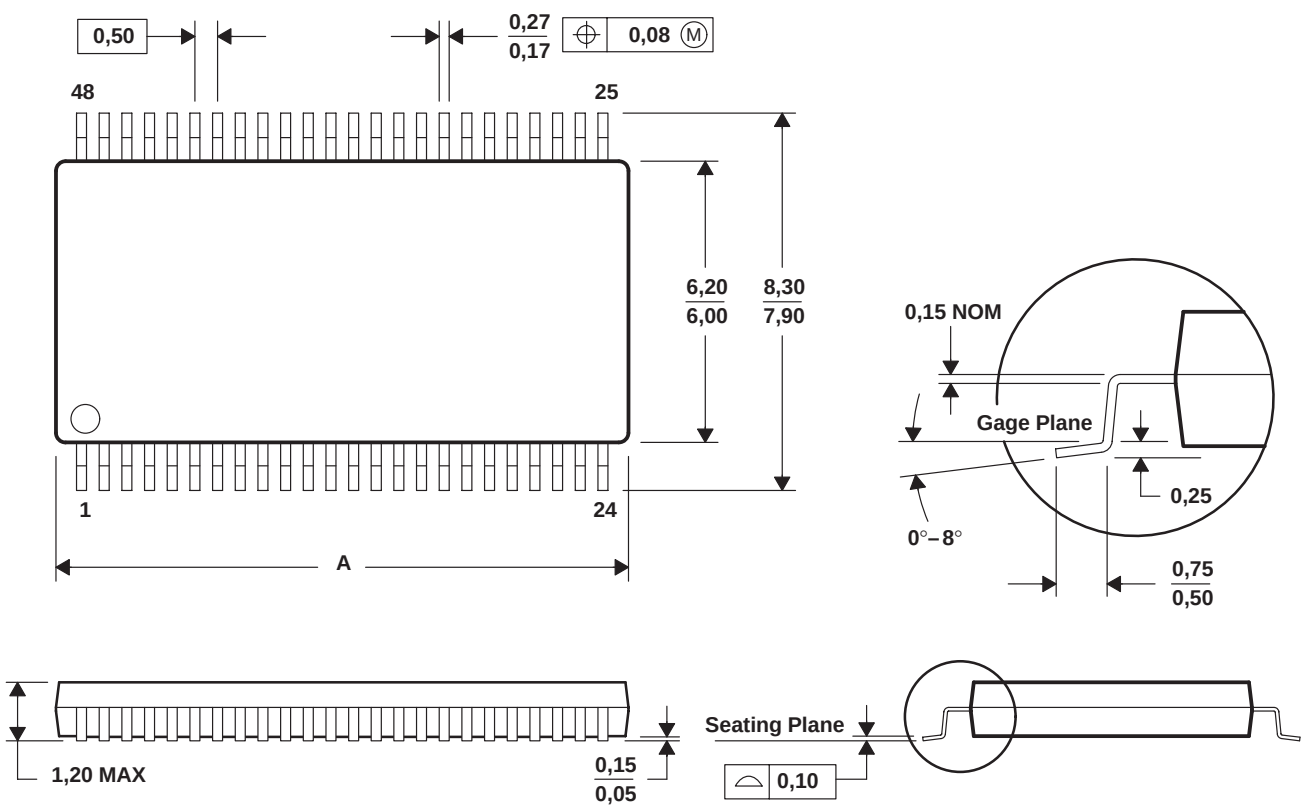

DIM \ PINS **	48	56	64
A MAX	12,60	14,10	17,10
A MIN	12,40	13,90	16,90

4040078/F 12/97

NOTES: A. All linear dimensions are in millimeters.
B. This drawing is subject to change without notice.
C. Body dimensions do not include mold protrusion not to exceed 0,15.
D. Falls within JEDEC MO-153

DL (R–PDSO–G48) PLASTIC SMALL–OUTLINE PACKAGE

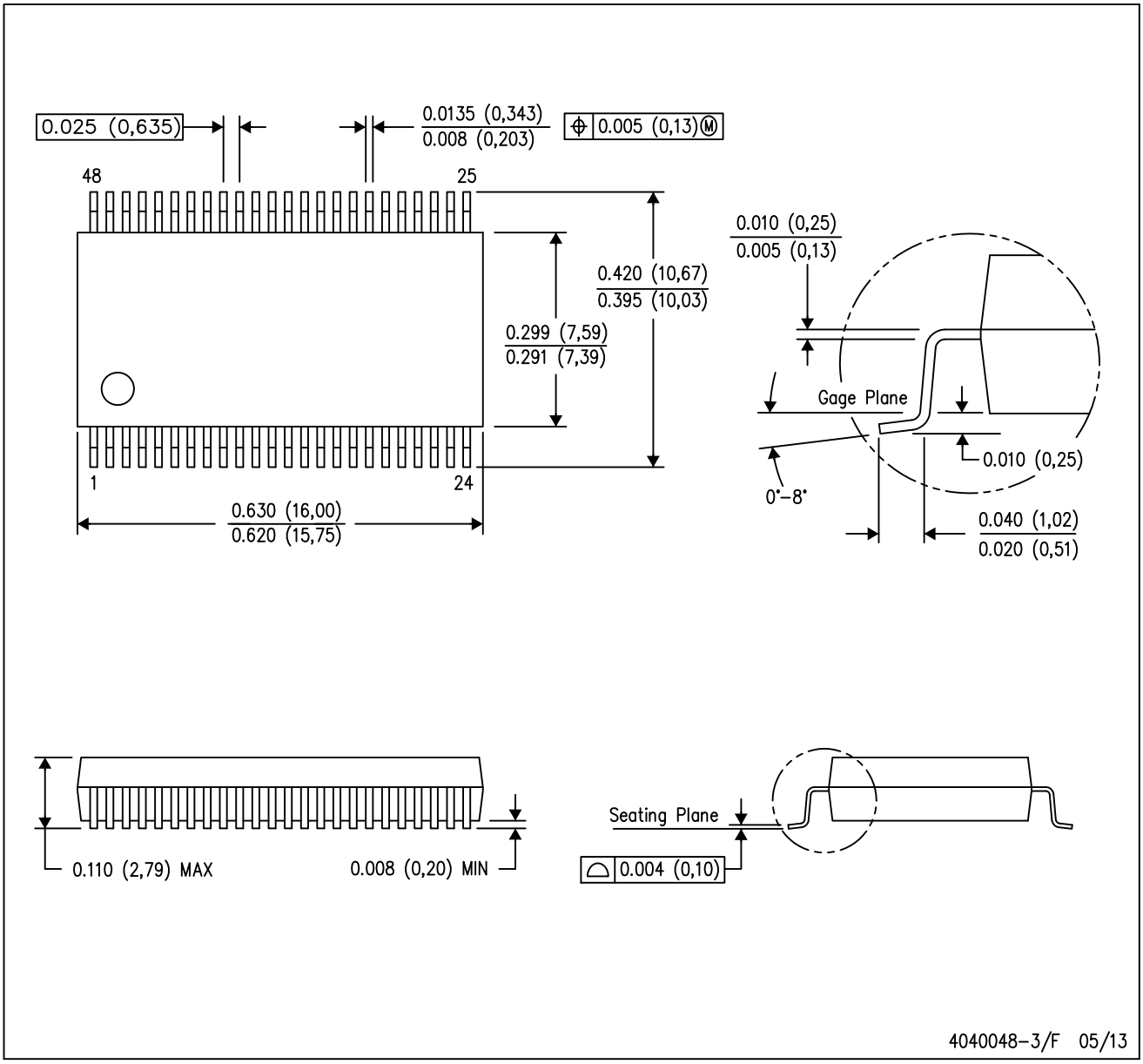

NOTES:
A. All linear dimensions are in inches (millimeters).
B. This drawing is subject to change without notice.
C. Body dimensions do not include mold flash or protrusion not to exceed 0.006 (0,15).
D. Falls within JEDEC MO–118

PowerPAD is a trademark of Texas Instruments.

IMPORTANT NOTICE AND DISCLAIMER

TI PROVIDES TECHNICAL AND RELIABILITY DATA (INCLUDING DATA SHEETS), DESIGN RESOURCES (INCLUDING REFERENCE DESIGNS), APPLICATION OR OTHER DESIGN ADVICE, WEB TOOLS, SAFETY INFORMATION, AND OTHER RESOURCES “AS IS” AND WITH ALL FAULTS, AND DISCLAIMS ALL WARRANTIES, EXPRESS AND IMPLIED, INCLUDING WITHOUT LIMITATION ANY IMPLIED WARRANTIES OF MERCHANTABILITY, FITNESS FOR A PARTICULAR PURPOSE OR NON-INFRINGEMENT OF THIRD PARTY INTELLECTUAL PROPERTY RIGHTS.

These resources are intended for skilled developers designing with TI products. You are solely responsible for (1) selecting the appropriate TI products for your application, (2) designing, validating and testing your application, and (3) ensuring your application meets applicable standards, and any other safety, security, regulatory or other requirements.

These resources are subject to change without notice. TI grants you permission to use these resources only for development of an application that uses the TI products described in the resource. Other reproduction and display of these resources is prohibited. No license is granted to any other TI intellectual property right or to any third party intellectual property right. TI disclaims responsibility for, and you will fully indemnify TI and its representatives against, any claims, damages, costs, losses, and liabilities arising out of your use of these resources.

TI’s products are provided subject to TI’s Terms of Sale or other applicable terms available either on ti.com or provided in conjunction with such TI products. TI’s provision of these resources does not expand or otherwise alter TI’s applicable warranties or warranty disclaimers for TI products.

TI objects to and rejects any additional or different terms you may have proposed.

Mailing Address: Texas Instruments, Post Office Box 655303, Dallas, Texas 75265
Copyright © 2022, Texas Instruments Incorporated