CC2652R SimpleLink™ 多协议 2.4GHz 无线 MCU

1 器件概述

1.1 特性

- 微控制器
  - 强大的 48MHz Arm® Cortex®-M4F 处理器
  - EEMBC CoreMark®评分：148
  - 352KB 系统内可编程闪存
  - 256KB ROM，用于协议和库函数
  - 8KB 缓存 SRAM（也可作为通用 RAM 提供）
  - 80KB 超低泄漏 SRAM。SRAM 通过奇偶校验得到保护，从而确保高度可靠运行。
  - 双引脚 cJTAG 和 JTAG 调试
  - 支持无线升级 (OTA)
- 具有 4KB SRAM 的超低功耗传感器控制器
  - 采样、存储和处理传感器数据
  - 独立于系统 CPU 运行
  - 快速唤醒进入低功耗运行
- TI-RTOS、驱动程序、引导加载程序、低功耗 *蓝牙*® 5 控制器和 IEEE 802.15.4 MAC 嵌入在 ROM 中，优化应用尺寸
- 符合 RoHS 标准的封装
  - 7mm × 7mm RGZ VQFN48 (31 GPIO)
- 外设
  - 数字外设可连接至任何 GPIO
  - 4 个 32 位或 8 个 16 位通用计时器
  - 12 位 ADC、200ksps、8 通道
  - 2 个具有内部基准 DAC 的比较器（1 个连续时间比较器、1 个超低功耗比较器）
  - 可编程电流源
  - 2 个异步收发器 (UART)
  - 2 个同步串行接口 (SSI)（SPI、MICROWIRE 和 TI）
  - I^2C
  - I^2S
  - 实时时钟 (RTC)
  - AES 128 位和 256 位加密加速计
  - ECC 和 RSA 公钥硬件加速器
  - SHA2 加速器（最高到 SHA-512 的全套装）
  - 真随机数发生器 (TRNG)
  - 电容式感应，最多 8 通道
  - 集成温度和电池监控器
- 外部系统
  - 片上降压直流/直流转换器
- 低功耗
  - 宽电源电压范围：1.8V 至 3.8V
  - 有源模式 RX：6.9mA
  - 有源模式 TX (0dBm)：7.3mA
  - 有源模式 TX (5dBm)：9.6mA
  - 有源模式 MCU 48MHz (CoreMark)：3.4mA (71µA/MHz)
  - 传感器控制器，低功耗模式，2MHz，运行无限循环电流：30.8µA
  - 传感器控制器，有源模式，24MHz，运行无限循环电流：808µA
  - 待机电流：0.94µA（RTC 运行，80KB RAM 和 CPU 保持）
  - 关断电流：150nA（发生外部事件时唤醒）
- 无线电部分
  - 与低功耗蓝牙 5 以及 IEEE 802.15.4 PHY 和 MAC 标准兼容的 2.4GHz 射频收发器
  - 出色的接收器灵敏度：802.15.4 (2.4GHz) 标准下为 -100dBm，蓝牙 125kbps 时（LE 编码 PHY）为 -105dBm
  - 高达 +5dBm 的输出功率，具有温度补偿
  - 适用于符合各项全球射频规范的系统
    - EN 300 328、（欧洲）
    - EN 300 440 类别 2
    - FCC CFR47 第 15 部分
    - ARIB STD-T66（日本）
- 开发 *工具和软件*
  - CC26x2 LaunchPad™ 开发套件
  - SimpleLink™ CC13X2-CC26X2 软件开发套件
  - 用于简单无线电配置的 SmartRF™ Studio
  - 用于构建低功耗检测应用的 Sensor Controller Studio

本文档旨在为方便起见，提供有关 TI 产品中文版本的信息，以确认产品的概要。 有关适用的官方英文版本的最新信息，请访问 www.ti.com，其内容始终优先。 TI 不保证翻译的准确性和有效性。 在实际设计之前，请务必参考最新版本的英文版本。

1.2 应用

- 2400MHz 至 2480MHz ISM 和 SRD 系统 (1)
  低至 4kHz 的接收带宽
- 住宅和楼宇自动化
  - 楼宇安全系统 - 运动检测器、电子门锁、门窗传感器、网关
  - HVAC - 恒温器、无线环境传感器、HVAC 系统控制器
  - 防火安全系统 - 烟雾探测器、火警控制面板
  - 视频监控 - IP 摄像机
  - 车库门开启器
  - 电梯和自动扶梯控制装置
- 智能电网和自动抄表
  - 水表、燃气表和电表
  - 热分配表
  - 网关
- 无线传感器网络
  - 远距离传感器 应用
- 资产跟踪和管理
- 工厂自动化
- 无线医疗保健 应用
- 能量收集 应用
- 电子货架标签 (ESL)

(1) 请参阅 *射频内核* 获取有关支持的协议标准、调制格式和数据速率的更多详细信息。

1.3 说明

CC2652R 器件是一款多协议无线 2.4GHz MCU，面向 Thread、 Zigbee®、低功耗 *Bluetooth*® 5、IEEE 802.15.4g、支持 IPv6 的智能对象 (6LoWPAN)、 Wi-SUN®以及专有系统，包括 TI 15.4-Stack。

CC2652R 器件是具有成本效益、超低功耗、2.4GHz 和低于 1GHz 射频器件 SimpleLink™ MCU 平台中的一员。非常低的有源射频和微控制器 (MCU) 电流以及低于 1µA 的睡眠电流和高达 80KB 并受奇偶校验保护的 RAM 保持能力可提供卓越的电池寿命，并支持依靠小型纽扣电池在能量采集应用中 运行中长时间的工作。

CC2652R 器件在一个支持多个物理层和射频标准的平台上将灵活的超低功耗 射频收发器与强大的 48 MHz Arm® Cortex®-M4F CPU 结合在一起。专用无线电控制器 (Arm® Cortex®-M0) 可处理存储在 ROM 或 RAM 中的低级射频协议命令，因而可确保超低功耗和极佳的灵活性。CC2652R 器件的低功耗不会影响射频性能，CC2652R 器件具有优异的灵敏度和耐用（选择性和阻断）性能。

CC2652R 中的灵活无线电可通过动态多协议管理器 (DMM) 驱动程序来支持时分多路复用的多协议运行。

CC2652R 器件是高度集成的真正单芯片解决方案，整合了完整的射频系统和片上直流/直流转换器。

通过具有 4KB 程序和数据 SRAM 存储器的可编程、自主式超低功耗传感器控制器 CPU，可在极低的功耗下处理传感器。具有快速唤醒和超低功耗 2MHz 模式的传感器控制器专为对模拟和数字传感器数据进行采样、缓存和处理而设计，因此 MCU 系统可以最大限度地延长睡眠时间和降低工作功耗。

CC2652R 器件是 SimpleLink™微控制器 (MCU) 平台的一部分，该平台包含 Wi-Fi®、低功耗 *Bluetooth*®、Thread、Zigbee、低于 1GHz MCU 和主机 MCU，它们共用一个通用且简单易用的开发环境，其中包含单核软件开发套件 (SDK) 和丰富的工具集。一次性集成 SimpleLink 平台后，用户可以将产品组合中器件的任何组合添加至您的设计中，从而在设计要求变更时实现代码的完全重复使用。有关更多信息，请访问 ti.com.cn/simplelink。

器件信息(1)

器件型号	封装	封装尺寸（标称值）
CC2652R1FRGZ	VQFN (48)	7.00mm × 7.00mm

(1) 要获得所有可用器件的最新部件、封装和订购信息，请参见封装选项附录 (节 9) 或浏览 TI 网站。

Copyright © 2018–2019, Texas Instruments Incorporated

1.4 Functional Block Diagram

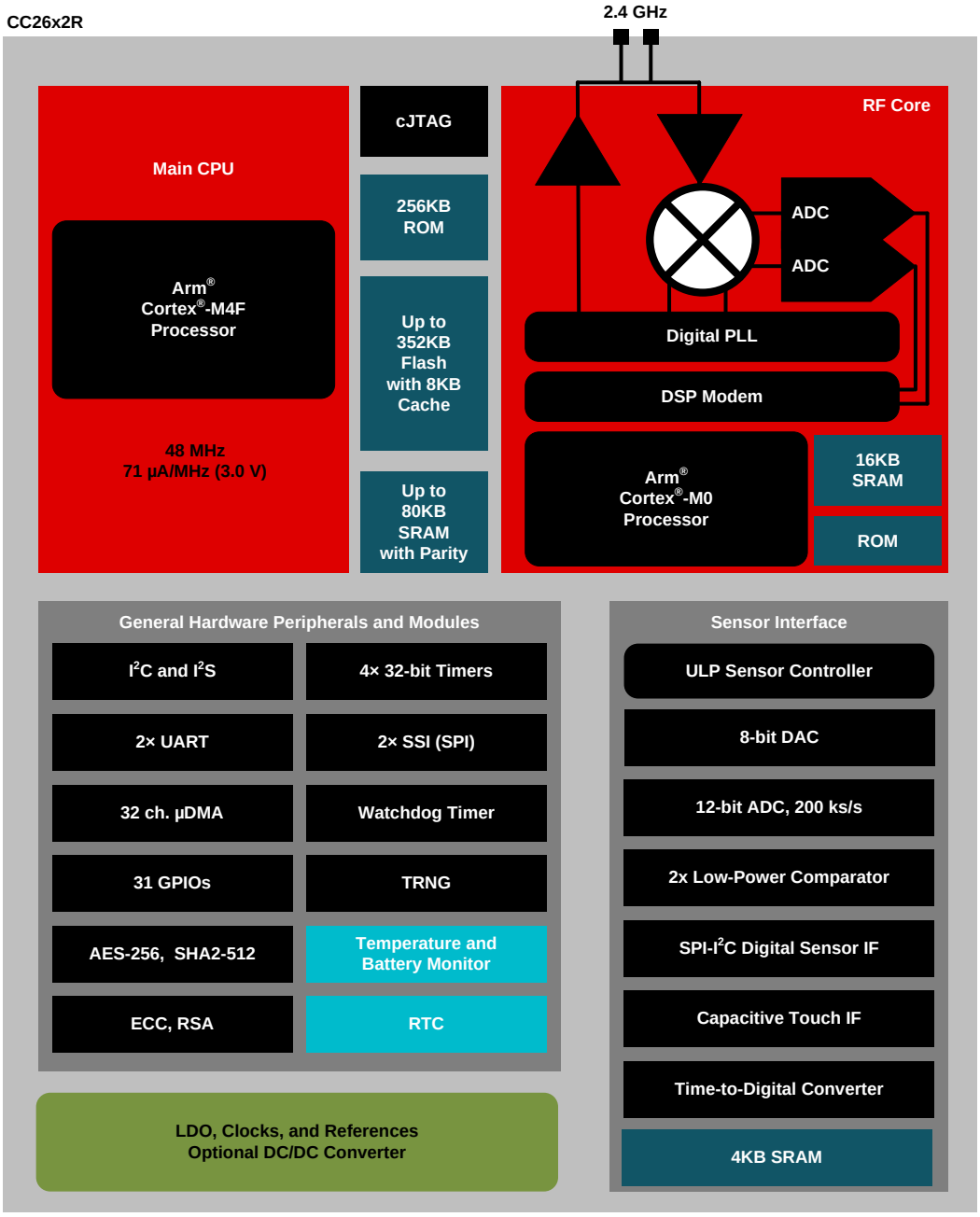

Figure 1-1. CC2652R Block Diagram

内容

1 器件概述 1
1.1 特性 1
1.2 应用 2
1.3 说明 2
1.4 Functional Block Diagram 3
2 修订历史记录 4
3 Device Comparison 5
4 Terminal Configuration and Functions 6
4.1 Pin Diagram – RGZ Package (Top View) 6
4.2 Signal Descriptions – RGZ Package 7
4.3 Connections for Unused Pins and Modules 8
5 Specifications 9
5.1 Absolute Maximum Ratings 9
5.2 ESD Ratings 9
5.3 Recommended Operating Conditions 9
5.4 Power Supply and Modules 9
5.5 Power Consumption - Power Modes 10
5.6 Power Consumption - Radio Modes 11
5.7 Nonvolatile (Flash) Memory Characteristics 11
5.8 Thermal Resistance Characteristics 12
5.9 Bluetooth Low Energy - Receive (RX) 13
5.10 Bluetooth Low Energy - Transmit (TX) 16
5.11 Zigbee and Thread - IEEE 802.15.4-2006 2.4 GHz (OQPSK DSSS1:8, 250 kbps) - RX 17
5.12 Zigbee and Thread - IEEE 802.15.4-2006 2.4 GHz (OQPSK DSSS1:8, 250 kbps) - TX 18
5.13 Timing and Switching Characteristics 19
5.14 Peripheral Characteristics 23
5.15 Typical Characteristics 31
6 Detailed Description 46
6.1 Overview 46
6.2 System CPU 46
6.3 Radio (RF Core) 47
6.4 Memory 48
6.5 Sensor Controller 49
6.6 Cryptography 50
6.7 Timers 51
6.8 Serial Peripherals and I/O 52
6.9 Battery and Temperature Monitor 52
6.10 µDMA 52
6.11 Debug 52
6.12 Power Management 53
6.13 Clock Systems 54
6.14 Network Processor 54
7 Application, Implementation, and Layout 55
7.1 Reference Designs 55
8 器件和文档支持 56
8.1 工具和软件 56
8.2 文档支持 58
8.3 Community Resources 59
8.4 商标 59
8.5 静电放电警告 59
8.6 Glossary 59
9 机械、封装和可订购信息 59
9.1 封装信息 59

2 修订历史记录

注：之前版本的页码可能与当前版本有所不同。

Changes from Revision D (May 2019) to Revision E — **Page**

- 已删除 删除了 YBG 封装的所有引用 1
- Deleted subsection 4.3 Pin Diagram – YBG Package (Top View) and subsection 4.4 Signal Descriptions – YBG Package in Section 4. Subsequent subsections renumbered 8
- Deleted Connections for Unused Pins – YBG Package table in Section 4.3 8
- Added footnote to Table 5-10 23
- 已添加 节 5.15 31
- 已添加 CC26x2REM-7ID Design Files to 节 7.1 55
- 已更改 更改了节 8.2中的“应用报告”小节 58

Copyright © 2018–2019, Texas Instruments Incorporated

3 Device Comparison

Table 3-1. Device Family Overview

DEVICE	RADIO SUPPORT	FLASH (KB)	RAM (KB)	GPIO	PACKAGE SIZE
CC1312R	Sub-1 GHz	352	80	30	RGZ (7-mm × 7-mm VQFN48)
CC1352P	Multiprotocol Sub-1 GHz Bluetooth 5 Low Energy Zigbee Thread 2.4-GHz proprietary FSK-based formats +20-dBm high-power amplifier	352	80	26	RGZ (7-mm × 7-mm VQFN48)
CC1352R	Multiprotocol Sub-1 GHz Bluetooth 5 Low Energy Zigbee Thread 2.4-GHz proprietary FSK-based formats	352	80	28	RGZ (7-mm × 7-mm VQFN48)
CC2642R	Bluetooth 5 Low Energy 2.4-GHz proprietary FSK-based formats	352	80	31	RGZ (7-mm × 7-mm VQFN48)
CC2652R	Multiprotocol Bluetooth 5 Low Energy Zigbee Thread 2.4-GHz proprietary FSK-based formats	352	80	31	RGZ (7-mm × 7-mm VQFN48)
CC2652RB	Multiprotocol Bluetooth 5 Low Energy Zigbee Thread 2.4-GHz proprietary FSK-based formats	352	80	31	RGZ (7-mm × 7-mm VQFN48)
CC2652P	Multiprotocol Bluetooth 5 Low Energy Zigbee Thread 2.4-GHz proprietary FSK-based formats +19.5-dBm high-power amplifier	352	80	26	RGZ (7-mm × 7-mm VQFN48)
CC1310	Sub-1 GHz	32–128	16–20	10–31	RGZ (7-mm × 7-mm VQFN48) RHB (5-mm × 5-mm VQFN32) RSM (4-mm × 4-mm VQFN32)
CC1350	Sub-1 GHz Bluetooth 4.2 Low Energy	128	20	10–31	RGZ (7-mm × 7-mm VQFN48) RHB (5-mm × 5-mm VQFN32) RSM (4-mm × 4-mm VQFN32)
CC2640R2F	Bluetooth 5 Low Energy 2.4-GHz proprietary FSK-based formats	128	20	10–31	RGZ (7-mm × 7-mm VQFN48) RHB (5-mm × 5-mm VQFN32) RSM (4-mm × 4-mm VQFN32) YFV (2.7-mm × 2.7-mm DSBGA34)
CC2640R2F-Q1	Bluetooth 5 Low Energy 2.4-GHz proprietary FSK-based formats	128	20	31	RGZ (7-mm × 7-mm VQFN48)

Copyright © 2018–2019, Texas Instruments Incorporated

4 Terminal Configuration and Functions

4.1 Pin Diagram – RGZ Package (Top View)

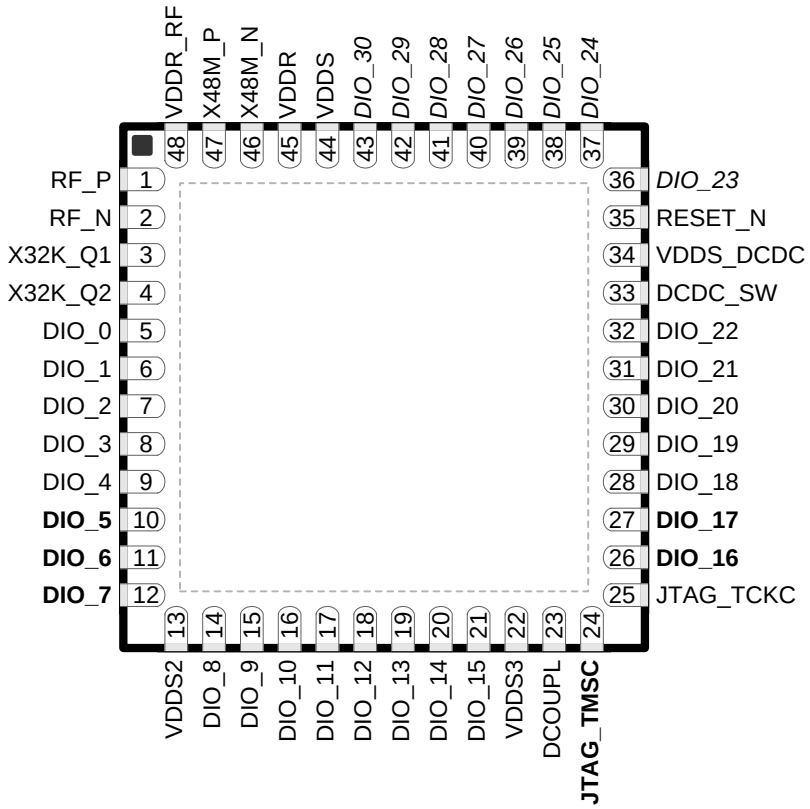

Figure 4-1. RGZ (7-mm × 7-mm) Pinout, 0.5-mm Pitch (Top View)

The following I/O pins marked in Figure 4-1 in **bold** have high-drive capabilities:

- Pin 10, DIO_5
- Pin 11, DIO_6
- Pin 12, DIO_7
- Pin 24, JTAG_TMSC
- Pin 26, DIO_16
- Pin 27, DIO_17

The following I/O pins marked in Figure 4-1 in *italics* have analog capabilities:

- Pin 36, DIO_23
- Pin 37, DIO_24
- Pin 38, DIO_25
- Pin 39, DIO_26
- Pin 40, DIO_27
- Pin 41, DIO_28
- Pin 42, DIO_29
- Pin 43, DIO_30

Copyright © 2018–2019, Texas Instruments Incorporated

4.2 Signal Descriptions – RGZ Package

Table 4-1. Signal Descriptions – RGZ Package

PIN		I/O	TYPE	DESCRIPTION
NAME	NO.			
DCDC_SW	33	—	Power	Output from internal DC/DC converter(1)
DCOUPL	23	—	Power	For decoupling of internal 1.27 V regulated digital-supply (2)
DIO_0	5	I/O	Digital	GPIO
DIO_1	6	I/O	Digital	GPIO
DIO_2	7	I/O	Digital	GPIO
DIO_3	8	I/O	Digital	GPIO
DIO_4	9	I/O	Digital	GPIO
DIO_5	10	I/O	Digital	GPIO, high-drive capability
DIO_6	11	I/O	Digital	GPIO, high-drive capability
DIO_7	12	I/O	Digital	GPIO, high-drive capability
DIO_8	14	I/O	Digital	GPIO
DIO_9	15	I/O	Digital	GPIO
DIO_10	16	I/O	Digital	GPIO
DIO_11	17	I/O	Digital	GPIO
DIO_12	18	I/O	Digital	GPIO
DIO_13	19	I/O	Digital	GPIO
DIO_14	20	I/O	Digital	GPIO
DIO_15	21	I/O	Digital	GPIO
DIO_16	26	I/O	Digital	GPIO, JTAG_TDO, high-drive capability
DIO_17	27	I/O	Digital	GPIO, JTAG_TDI, high-drive capability
DIO_18	28	I/O	Digital	GPIO
DIO_19	29	I/O	Digital	GPIO
DIO_20	30	I/O	Digital	GPIO
DIO_21	31	I/O	Digital	GPIO
DIO_22	32	I/O	Digital	GPIO
DIO_23	36	I/O	Digital or Analog	GPIO, analog capability
DIO_24	37	I/O	Digital or Analog	GPIO, analog capability
DIO_25	38	I/O	Digital or Analog	GPIO, analog capability
DIO_26	39	I/O	Digital or Analog	GPIO, analog capability
DIO_27	40	I/O	Digital or Analog	GPIO, analog capability
DIO_28	41	I/O	Digital or Analog	GPIO, analog capability
DIO_29	42	I/O	Digital or Analog	GPIO, analog capability
DIO_30	43	I/O	Digital or Analog	GPIO, analog capability
EGP	—	—	GND	Ground – exposed ground pad(3)
JTAG_TMSC	24	I/O	Digital	JTAG TMSC, high-drive capability
JTAG_TCKC	25	I	Digital	JTAG TCKC
RESET_N	35	I	Digital	Reset, active low. No internal pullup resistor
RF_P	1	—	RF	Positive RF input signal to LNA during RX Positive RF output signal from PA during TX
RF_N	2	—	RF	Negative RF input signal to LNA during RX Negative RF output signal from PA during TX

(1) For more details, see technical reference manual listed in 节 8.2.
(2) Do not supply external circuitry from this pin.
(3) EGP is the only ground connection for the device. Good electrical connection to device ground on printed circuit board (PCB) is imperative for proper device operation.

Copyright © 2018–2019, Texas Instruments Incorporated

Table 4-1. Signal Descriptions – RGZ Package (continued)

PIN		I/O	TYPE	DESCRIPTION
NAME	NO.			
VDDR	45	—	Power	Internal supply, must be powered from the internal DC/DC converter or the internal LDO(4)(2)(5)
VDDR_RF	48	—	Power	Internal supply, must be powered from the internal DC/DC converter or the internal LDO(6)(2)(5)
VDDS	44	—	Power	1.8-V to 3.8-V main chip supply(1)
VDDS2	13	—	Power	1.8-V to 3.8-V DIO supply(1)
VDDS3	22	—	Power	1.8-V to 3.8-V DIO supply(1)
VDDS_DCDC	34	—	Power	1.8-V to 3.8-V DC/DC converter supply
X48M_N	46	—	Analog	48-MHz crystal oscillator pin 1
X48M_P	47	—	Analog	48-MHz crystal oscillator pin 2
X32K_Q1	3	—	Analog	32-kHz crystal oscillator pin 1
X32K_Q2	4	—	Analog	32-kHz crystal oscillator pin 2

(4) If internal DC/DC converter is not used, this pin is supplied internally from the main LDO.
(5) Output from internal DC/DC and LDO is trimmed to 1.68 V.
(6) If internal DC/DC converter is not used, this pin must be connected to VDDR for supply from the main LDO.

4.3 Connections for Unused Pins and Modules

Table 4-2. Connections for Unused Pins – RGZ Package

FUNCTION	SIGNAL NAME	PIN NUMBER	ACCEPTABLE PRACTICE(1)	PREFERRED PRACTICE(1)
GPIO	DIO_n	5–12 14–21 26–32 36–43	NC or GND	NC
32.768-kHz crystal	X32K_Q1	3	NC or GND	NC
	X32K_Q2	4		
DC/DC converter(2)	DCDC_SW	33	NC	NC
	VDDS_DCDC	34	VDDS	VDDS

(1) NC = No connect
(2) When the DC/DC converter is not used, the inductor between DCDC_SW and VDDR can be removed. VDDR and VDDR_RF must still be connected and the 22 uF DCDC capacitor must be kept on the VDDR net.

Copyright © 2018–2019, Texas Instruments Incorporated

5 Specifications

5.1 Absolute Maximum Ratings

over operating free-air temperature range (unless otherwise noted)(1) (2)

			MIN	MAX	UNIT
VDDS(3)	Supply voltage		–0.3	4.1	V
	Voltage on any digital pin(4)		–0.3	VDDS + 0.3, max 4.1	V
	Voltage on crystal oscillator pins, X32K_Q1, X32K_Q2, X48M_N and X48M_P		–0.3	VDDR + 0.3, max 2.25	V
V_{in}	Voltage on ADC input	Voltage scaling enabled	–0.3	VDDS	V
		Voltage scaling disabled, internal reference	–0.3	1.49	
		Voltage scaling disabled, VDDS as reference	–0.3	VDDS / 2.9	
	Input level, RF pins			5	dBm
T_{stg}	Storage temperature		–40	150	°C

(1) Stresses beyond those listed under *Absolute Maximum Ratings* may cause permanent damage to the device. These are stress ratings only, and functional operation of the device at these or any other conditions beyond those indicated under *Recommended Operating Conditions* is not implied. Exposure to absolute-maximum-rated conditions for extended periods may affect device reliability.
(2) All voltage values are with respect to ground, unless otherwise noted.
(3) VDDS_DCDC, VDDS2 and VDDS3 must be at the same potential as VDDS.
(4) Including analog capable DIOs.

5.2 ESD Ratings

				VALUE	UNIT
V_{ESD}	Electrostatic discharge	Human body model (HBM), per ANSI/ESDA/JEDEC JS-001(1)	All pins	±2000	V
		Charged device model (CDM), per ANSI/ESDA/JEDEC JS-002(2)	All pins	±500	V

(1) JEDEC document JEP155 states that 500-V HBM allows safe manufacturing with a standard ESD control process
(2) JEDEC document JEP157 states that 250-V CDM allows safe manufacturing with a standard ESD control process

5.3 Recommended Operating Conditions

over operating free-air temperature range (unless otherwise noted)

	MIN	MAX	UNIT
Operating ambient temperature range	–40	85	°C
Operating supply voltage (VDDS)	1.8	3.8	V
Rising supply voltage slew rate	0	100	mV/µs
Falling supply voltage slew rate(1)	0	20	mV/µs

(1) For small coin-cell batteries, with high worst-case end-of-life equivalent source resistance, a 22-µF VDDS input capacitor must be used to ensure compliance with this slew rate.

5.4 Power Supply and Modules

over operating free-air temperature range (unless otherwise noted)

PARAMETER		TYP	UNIT
VDDS Power-on-Reset (POR) threshold		1.1 - 1.55	V
VDDS Brown-out Detector (BOD) (1)	Rising threshold	1.77	V
VDDS Brown-out Detector (BOD), before initial boot (2)	Rising threshold	1.70	V
VDDS Brown-out Detector (BOD) (1)	Falling threshold	1.75	V

(1) For boost mode (VDDR =1.95 V), TI drivers software initialization will trim VDDS BOD limits to maximum (approximately 2.0 V)
(2) Brown-out Detector is trimmed at initial boot, value is kept until device is reset by a POR reset or the RESET_N pin

Copyright © 2018–2019, Texas Instruments Incorporated

5.5 Power Consumption - Power Modes

When measured on the CC26x2REM-7ID reference design with T_c = 25 °C, V_{DDS} = 3.0 V with DC/DC enabled unless otherwise noted.

PARAMETER		TEST CONDITIONS	TYP	UNIT
Core Current Consumption				
I_{core}	Reset and Shutdown	Reset. RESET_N pin asserted or VDDS below power-on-reset threshold	150	nA
		Shutdown. No clocks running, no retention	150	
	Standby without cache retention	RTC running, CPU, 80KB RAM and (partial) register retention. RCOSC_LF	0.94	µA
		RTC running, CPU, 80KB RAM and (partial) register retention XOSC_LF	1.09	µA
	Standby with cache retention	RTC running, CPU, 80KB RAM and (partial) register retention. RCOSC_LF	3.2	µA
		RTC running, CPU, 80KB RAM and (partial) register retention. XOSC_LF	3.3	µA
	Idle	Supply Systems and RAM powered RCOSC_HF	675	µA
	Active	MCU running CoreMark at 48 MHz RCOSC_HF	3.39	mA
Peripheral Current Consumption				
I_{peri}	Peripheral power domain	Delta current with domain enabled	97.7	µA
	Serial power domain	Delta current with domain enabled	7.2	
	RF Core	Delta current with power domain enabled, clock enabled, RF core idle	210.9	
	µDMA	Delta current with clock enabled, module is idle	63.9	
	Timers	Delta current with clock enabled, module is idle (1)	81.0	
	I2C	Delta current with clock enabled, module is idle	10.1	
	I2S	Delta current with clock enabled, module is idle	26.3	
	SSI	Delta current with clock enabled, module is idle	82.9	
	UART	Delta current with clock enabled, module is idle (2)	167.5	
	CRYPTO (AES)	Delta current with clock enabled, module is idle (3)	25.6	
	PKA	Delta current with clock enabled, module is idle	84.7	
	TRNG	Delta current with clock enabled, module is idle	35.6	
Sensor Controller Engine Consumption				
I_{SCE}	Active mode	24 MHz, infinite loop	808.5	µA
	Low-power mode	2 MHz, infinite loop	30.1	

(1) Only one GPTimer running
(2) Only one UART running
(3) Only one SSI running

版权 © 2018–2019, Texas Instruments Incorporated

5.6 Power Consumption - Radio Modes

When measured on the reference design with T_c = 25 °C, V_{DDS} = 3.0 V with DC/DC enabled unless otherwise noted.

PARAMETER		TEST CONDITIONS	TYP	UNIT
	Radio receive current	2440 MHz	6.9	mA
	Radio transmit current	0 dBm output power setting 2440 MHz	7.3	mA
		+5 dBm output power setting 2440 MHz	9.6	mA

5.7 Nonvolatile (Flash) Memory Characteristics

Over operating free-air temperature range and V_{DDS} = 3.0 V (unless otherwise noted)

PARAMETER	TEST CONDITIONS	MIN	TYP	MAX	UNIT
Flash sector size			8		KB
Supported flash erase cycles before failure, full bank(1)		30			k Cycles
Supported flash erase cycles before failure, single sector(2)		60			k Cycles
Maximum number of write operations per row before sector erase(3)				83	Write Operations
Flash retention	105 °C	11.4			Years at 105 °C
Flash sector erase current	Average delta current		10.7		mA
Flash sector erase time(4)			10		ms
Flash write current	Average delta current, 4 bytes at a time		6.2		mA
Flash write time(4)	4 bytes at a time		21.6		µs

(1) A full bank erase is counted as a single erase cycle on each sector
(2) Up to 4 customer-designated sectors can be individually erased an additional 30k times beyond the baseline bank limitation of 30k cycles
(3) Each wordline is 2048 bits (or 256 bytes) wide. This limitation corresponds to sequential memory writes of 4 (3.1) bytes minimum per write over a whole wordline. If additional writes to the same wordline are required, a sector erase is required once the maximum number of write operations per row is reached.
(4) This number is dependent on Flash aging and increases over time and erase cycles

版权 © 2018–2019, Texas Instruments Incorporated

5.8 Thermal Resistance Characteristics

THERMAL METRIC[1]		PACKAGE	UNIT
		RGZ (VQFN)	
		48 PINS	
$R_{\theta JA}$	Junction-to-ambient thermal resistance	23.4	°C/W[2]
$R_{\theta JC(top)}$	Junction-to-case (top) thermal resistance	13.3	°C/W[2]
$R_{\theta JB}$	Junction-to-board thermal resistance	8.0	°C/W[2]
ψ_{JT}	Junction-to-top characterization parameter	0.1	°C/W[2]
ψ_{JB}	Junction-to-board characterization parameter	7.9	°C/W[2]
$R_{\theta JC(bot)}$	Junction-to-case (bottom) thermal resistance	1.7	°C/W[2]

(1) For more information about traditional and new thermal metrics, see *Semiconductor and IC Package Thermal Metrics*.
(2) °C/W = degrees Celsius per watt.

Copyright © 2018–2019, Texas Instruments Incorporated

5.9 Bluetooth Low Energy - Receive (RX)

When measured on the CC26x2REM-7ID reference design with T_c = 25 °C, V_{DDS} = 3.0 V, f_{RF}= 2440 MHz with DC/DC enabled unless otherwise noted. All measurements are performed at the antenna input with a combined RX and TX path.
All measurements are performed conducted.

PARAMETER	TEST CONDITIONS	MIN	TYP	MAX	UNIT
125 kbps (LE Coded)					
Receiver sensitivity	Differential mode. BER = 10^{-3}		–105		dBm
Receiver saturation	Differential mode. BER = 10^{-3}		>5		dBm
Frequency error tolerance	Difference between the incoming carrier frequency and the internally generated carrier frequency		> (–300 / 300)		kHz
Data rate error tolerance	Difference between incoming data rate and the internally generated data rate (37-byte packets)		> (–320 / 240)		ppm
Data rate error tolerance	Difference between incoming data rate and the internally generated data rate (255-byte packets)		> (–125 / 125)		ppm
Co-channel rejection(1)	Wanted signal at –79 dBm, modulated interferer in channel, BER = 10^{-3}		–1.5		dB
Selectivity, ±1 MHz(1)	Wanted signal at –79 dBm, modulated interferer at ±1 MHz, BER = 10^{-3}		8 / 4.5(2)		dB
Selectivity, ±2 MHz(1)	Wanted signal at –79 dBm, modulated interferer at ±2 MHz, BER = 10^{-3}		44 / 39(2)		dB
Selectivity, ±3 MHz(1)	Wanted signal at –79 dBm, modulated interferer at ±3 MHz, BER = 10^{-3}		46 / 44(2)		dB
Selectivity, ±4 MHz(1)	Wanted signal at –79 dBm, modulated interferer at ±4 MHz, BER = 10^{-3}		44 / 46(2)		dB
Selectivity, ±6 MHz(1)	Wanted signal at –79 dBm, modulated interferer at ≥ ±6 MHz, BER = 10^{-3}		48 / 44(2)		dB
Selectivity, ±7 MHz	Wanted signal at –79 dBm, modulated interferer at ≥ ±7 MHz, BER = 10^{-3}		51 / 45(2)		dB
Selectivity, Image frequency(1)	Wanted signal at –79 dBm, modulated interferer at image frequency, BER = 10^{-3}		39		dB
Selectivity, Image frequency ±1 MHz(1)	Note that Image frequency + 1 MHz is the Co- channel –1 MHz. Wanted signal at –79 dBm, modulated interferer at ±1 MHz from image frequency, BER = 10^{-3}		4.5 / 44 (2)		dB
500 kbps (LE Coded)					
Receiver sensitivity	Differential mode. BER = 10^{-3}		–100		dBm
Receiver saturation	Differential mode. BER = 10^{-3}		> 5		dBm
Frequency error tolerance	Difference between the incoming carrier frequency and the internally generated carrier frequency		> (–300 / 300)		kHz
Data rate error tolerance	Difference between incoming data rate and the internally generated data rate (37-byte packets)		> (–450 / 450)		ppm
Data rate error tolerance	Difference between incoming data rate and the internally generated data rate (255-byte packets)		> (–175 / 175)		ppm
Co-channel rejection(1)	Wanted signal at –72 dBm, modulated interferer in channel, BER = 10^{-3}		–3.5		dB
Selectivity, ±1 MHz(1)	Wanted signal at –72 dBm, modulated interferer at ±1 MHz, BER = 10^{-3}		8 / 4(2)		dB
Selectivity, ±2 MHz(1)	Wanted signal at –72 dBm, modulated interferer at ±2 MHz, BER = 10^{-3}		44 / 37(2)		dB
Selectivity, ±3 MHz(1)	Wanted signal at –72 dBm, modulated interferer at ±3 MHz, BER = 10^{-3}		46 / 46(2)		dB
Selectivity, ±4 MHz(1)	Wanted signal at –72 dBm, modulated interferer at ±4 MHz, BER = 10^{-3}		45 / 47(2)		dB
Selectivity, ±6 MHz(1)	Wanted signal at –72 dBm, modulated interferer at ≥ ±6 MHz, BER = 10^{-3}		46 / 45(2)		dB
Selectivity, ±7 MHz	Wanted signal at –72 dBm, modulated interferer at ≥ ±7 MHz, BER = 10^{-3}		49 / 45(2)		dB

(1) Numbers given as I/C dB
(2) X / Y, where X is +N MHz and Y is –N MHz

Copyright © 2018–2019, Texas Instruments Incorporated

Bluetooth Low Energy - Receive (RX) *(continued)*

When measured on the CC26x2REM-7ID reference design with T_c = 25 °C, V_{DDS} = 3.0 V, f_{RF}= 2440 MHz with DC/DC enabled unless otherwise noted. All measurements are performed at the antenna input with a combined RX and TX path.
All measurements are performed conducted.

PARAMETER	TEST CONDITIONS	MIN	TYP	MAX	UNIT
Selectivity, Image frequency(1)	Wanted signal at –72 dBm, modulated interferer at image frequency, BER = 10^{-3}		37		dB
Selectivity, Image frequency ±1 MHz(1)	Note that Image frequency + 1 MHz is the Co- channel –1 MHz. Wanted signal at –72 dBm, modulated interferer at ±1 MHz from image frequency, BER = 10^{-3}		4 / 46(2)		dB
1 Mbps (LE 1M)					
Receiver sensitivity	Differential mode. BER = 10^{-3}		–97		dBm
Receiver saturation	Differential mode. BER = 10^{-3}		> 5		dBm
Frequency error tolerance	Difference between the incoming carrier frequency and the internally generated carrier frequency		> (–350 / 350)		kHz
Data rate error tolerance	Difference between incoming data rate and the internally generated data rate (37-byte packets)		> (–750 / 750)		ppm
Co-channel rejection(1)	Wanted signal at –67 dBm, modulated interferer in channel, BER = 10^{-3}		–6		dB
Selectivity, ±1 MHz(1)	Wanted signal at –67 dBm, modulated interferer at ±1 MHz, BER = 10^{-3}		7 / 4(2)		dB
Selectivity, ±2 MHz(1)	Wanted signal at –67 dBm, modulated interferer at ±2 MHz,BER = 10^{-3}		40 / 33(2)		dB
Selectivity, ±3 MHz(1)	Wanted signal at –67 dBm, modulated interferer at ±3 MHz, BER = 10^{-3}		36 / 41(2)		dB
Selectivity, ±4 MHz(1)	Wanted signal at –67 dBm, modulated interferer at ±4 MHz, BER = 10^{-3}		36 / 45(2)		dB
Selectivity, ±5 MHz or more(1)	Wanted signal at –67 dBm, modulated interferer at ≥ ±5 MHz, BER = 10^{-3}		40		dB
Selectivity, image frequency(1)	Wanted signal at –67 dBm, modulated interferer at image frequency, BER = 10^{-3}		33		dB
Selectivity, image frequency ±1 MHz(1)	Note that Image frequency + 1 MHz is the Co- channel –1 MHz. Wanted signal at –67 dBm, modulated interferer at ±1 MHz from image frequency, BER = 10^{-3}		4 / 41(2)		dB
Out-of-band blocking(3)	30 MHz to 2000 MHz		–10		dBm
Out-of-band blocking	2003 MHz to 2399 MHz		–18		dBm
Out-of-band blocking	2484 MHz to 2997 MHz		–12		dBm
Out-of-band blocking	3000 MHz to 12.75 GHz		–2		dBm
Intermodulation	Wanted signal at 2402 MHz, –64 dBm. Two interferers at 2405 and 2408 MHz respectively, at the given power level		–42		dBm
Spurious emissions, 30 to 1000 MHz(4)	Measurement in a 50-Ω single-ended load.		< –54		dBm
Spurious emissions, 1 to 12.75 GHz(4)	Measurement in a 50 Ω single-ended load.		< –47		dBm
RSSI dynamic range			70		dB
RSSI accuracy			±4		dB
2 Mbps (LE 2M)					
Receiver sensitivity	Differential mode. Measured at SMA connector, BER = 10^{-3}		–92		dBm
Receiver saturation	Differential mode. Measured at SMA connector, BER = 10^{-3}		> 5		dBm
Frequency error tolerance	Difference between the incoming carrier frequency and the internally generated carrier frequency		> (–500 / 500)		kHz
Data rate error tolerance	Difference between incoming data rate and the internally generated data rate (37-byte packets)		> (–700 / 750)		ppm

(3) Excluding one exception at F_{wanted} / 2, per Bluetooth Specification
(4) Suitable for systems targeting compliance with worldwide radio-frequency regulations ETSI EN 300 328 and EN 300 440 Class 2 (Europe), FCC CFR47 Part 15 (US), and ARIB STD-T66 (Japan)

Copyright © 2018–2019, Texas Instruments Incorporated

Bluetooth Low Energy - Receive (RX) *(continued)*

When measured on the CC26x2REM-7ID reference design with T_c = 25 °C, V_{DDS} = 3.0 V, f_{RF}= 2440 MHz with

DC/DC enabled unless otherwise noted. All measurements are performed at the antenna input with a combined RX and TX path.

All measurements are performed conducted.

PARAMETER	TEST CONDITIONS	MIN	TYP	MAX	UNIT
Co-channel rejection(1)	Wanted signal at –67 dBm, modulated interferer in channel,BER = 10^{-3}		–7		dB
Selectivity, ±2 MHz(1)	Wanted signal at –67 dBm, modulated interferer at ±2 MHz, Image frequency is at –2 MHz, BER = 10^{-3}		8 / 4(2)		dB
Selectivity, ±4 MHz(1)	Wanted signal at –67 dBm, modulated interferer at ±4 MHz, BER = 10^{-3}		36 / 36(2)		dB
Selectivity, ±6 MHz(1)	Wanted signal at –67 dBm, modulated interferer at ±6 MHz, BER = 10^{-3}		37 / 36(2)		dB
Selectivity, image frequency(1)	Wanted signal at –67 dBm, modulated interferer at image frequency, BER = 10^{-3}		4		dB
Selectivity, image frequency ±2 MHz(1)	Note that Image frequency + 2 MHz is the Co-channel. Wanted signal at –67 dBm, modulated interferer at ±2 MHz from image frequency, BER = 10^{-3}		–7 / 36(2)		dB
Out-of-band blocking(3)	30 MHz to 2000 MHz		–16		dBm
Out-of-band blocking	2003 MHz to 2399 MHz		–21		dBm
Out-of-band blocking	2484 MHz to 2997 MHz		–15		dBm
Out-of-band blocking	3000 MHz to 12.75 GHz		–12		dBm
Intermodulation	Wanted signal at 2402 MHz, –64 dBm. Two interferers at 2405 and 2408 MHz respectively, at the given power level		–38		dBm

Copyright © 2018–2019, Texas Instruments Incorporated

5.10 Bluetooth Low Energy - Transmit (TX)

When measured on the CC26x2REM-7ID reference design with T_c = 25 °C, V_{DDS} = 3.0 V, f_{RF}= 2440 MHz with DC/DC enabled unless otherwise noted. All measurements are performed at the antenna input with a combined RX and TX path.
All measurements are performed conducted.

PARAMETER	TEST CONDITIONS		MIN	TYP	MAX	UNIT
General Parameters						
Max output power	Differential mode, delivered to a single-ended 50 Ω load through a balun			5		dBm
Output power programmable range	Differential mode, delivered to a single-ended 50 Ω load through a balun			26		dB
Spurious emissions and harmonics						
Spurious emissions (1)	f < 1 GHz, outside restricted bands	+5 dBm setting		< –36		dBm
	f < 1 GHz, restricted bands ETSI	+5 dBm setting		< –47		dBm
	f < 1 GHz, restricted bands FCC	+5 dBm setting		< –55		dBm
	f > 1 GHz, including harmonics	+5 dBm setting		< –42		dBm
Harmonics (1)	Second harmonic	+5 dBm setting		< –42		dBm
	Third harmonic	+5 dBm setting		< –42		dBm

(1) Suitable for systems targeting compliance with worldwide radio-frequency regulations ETSI EN 300 328 and EN 300 440 Class 2 (Europe), FCC CFR47 Part 15 (US), and ARIB STD-T66 (Japan).

版权 © 2018–2019, Texas Instruments Incorporated

5.11 Zigbee and Thread - IEEE 802.15.4-2006 2.4 GHz (OQPSK DSSS1:8, 250 kbps) - RX

When measured on the CC26x2REM-7ID reference design with T_c = 25 °C, V_{DDS} = 3.0 V, f_{RF}= 2440 MHz with DC/DC enabled unless otherwise noted. All measurements are performed at the antenna input with a combined RX and TX path.
All measurements are performed conducted.

PARAMETER	TEST CONDITIONS	MIN	TYP	MAX	UNIT
Receiver sensitivity	PER = 1%		–100		dBm
Receiver saturation	PER = 1%		> 5		dBm
Adjacent channel rejection	Wanted signal at –82 dBm, modulated interferer at ±5 MHz, PER = 1%		36		dB
Alternate channel rejection	Wanted signal at –82 dBm, modulated interferer at ±10 MHz, PER = 1%		57		dB
Channel rejection, ±15 MHz or more	Wanted signal at –82 dBm, undesired signal is IEEE 802.15.4 modulated channel, stepped through all channels 2405 to 2480 MHz, PER = 1%		59		dB
Blocking and desensitization, 5 MHz from upper band edge	Wanted signal at –97 dBm (3 dB above the sensitivity level), CW jammer, PER = 1%		57		dB
Blocking and desensitization, 10 MHz from upper band edge	Wanted signal at –97 dBm (3 dB above the sensitivity level), CW jammer, PER = 1%		63		dB
Blocking and desensitization, 20 MHz from upper band edge	Wanted signal at –97 dBm (3 dB above the sensitivity level), CW jammer, PER = 1%		63		dB
Blocking and desensitization, 50 MHz from upper band edge	Wanted signal at –97 dBm (3 dB above the sensitivity level), CW jammer, PER = 1%		66		dB
Blocking and desensitization, –5 MHz from lower band edge	Wanted signal at –97 dBm (3 dB above the sensitivity level), CW jammer, PER = 1%		60		dB
Blocking and desensitization, –10 MHz from lower band edge	Wanted signal at –97 dBm (3 dB above the sensitivity level), CW jammer, PER = 1%		60		dB
Blocking and desensitization, –20 MHz from lower band edge	Wanted signal at –97 dBm (3 dB above the sensitivity level), CW jammer, PER = 1%		63		dB
Blocking and desensitization, –50 MHz from lower band edge	Wanted signal at –97 dBm (3 dB above the sensitivity level), CW jammer, PER = 1%		65		dB
Spurious emissions, 30 MHz to 1000 MHz	Measurement in a 50-Ω single-ended load		–66		dBm
Spurious emissions, 1 GHz to 12.75 GHz	Measurement in a 50-Ω single-ended load		–53		dBm
Frequency error tolerance	Difference between the incoming carrier frequency and the internally generated carrier frequency		> 350		ppm
Symbol rate error tolerance	Difference between incoming symbol rate and the internally generated symbol rate		> 1000		ppm
RSSI dynamic range			95		dB
RSSI accuracy			±4		dB

Copyright © 2018–2019, Texas Instruments Incorporated

5.12 Zigbee and Thread - IEEE 802.15.4-2006 2.4 GHz (OQPSK DSSS1:8, 250 kbps) - TX

When measured on the CC26x2REM-7ID reference design with T_c = 25 °C, V_{DDS} = 3.0 V, f_{RF}= 2440 MHz with DC/DC enabled unless otherwise noted. All measurements are performed at the antenna input with a combined RX and TX path.
All measurements are performed conducted.

PARAMETER	TEST CONDITIONS		MIN	TYP	MAX	UNIT
General Parameters						
Max output power	Differential mode, delivered to a single-ended 50-Ω load through a balun			5		dBm
Output power programmable range	Differential mode, delivered to a single-ended 50-Ω load through a balun			26		dB
Spurious emissions and harmonics						
Spurious emissions (1) (2)	f < 1 GHz, outside restricted bands	+5 dBm setting		< -36		dBm
	f < 1 GHz, restricted bands ETSI	+5 dBm setting		< -47		dBm
	f < 1 GHz, restricted bands FCC	+5 dBm setting		< -55		dBm
	f > 1 GHz, including harmonics	+5 dBm setting		< –42		dBm
Harmonics (1)	Second harmonic	+5 dBm setting		< -42		dBm
	Third harmonic	+5 dBm setting		< -42		dBm
IEEE 802.15.4-2006 2.4 GHz (OQPSK DSSS1:8, 250 kbps)						
Error vector magnitude	+5 dBm setting			2		%

(1) Suitable for systems targeting compliance with worldwide radio-frequency regulations ETSI EN 300 328 and EN 300 440 Class 2 (Europe), FCC CFR47 Part 15 (US), and ARIB STD-T66 (Japan).
(2) To ensure margins for passing FCC band edge requirements at 2483.5 MHz, a lower than maximum output-power setting or less than 100% duty cycle may be used when operating at 2480 MHz.

版权 © 2018–2019, Texas Instruments Incorporated

5.13 Timing and Switching Characteristics

Table 5-1. Reset Timing

PARAMETER	MIN	TYP	MAX	UNIT
RESET_N low duration	1			µs

Table 5-2. Wakeup Timing

Measured over operating free-air temperature with V_{DDS} = 3.0 V (unless otherwise noted). The times listed here do not include software overhead.

PARAMETER	TEST CONDITIONS	MIN	TYP	MAX	UNIT
MCU, Reset to Active(1)			850 - 3000		µs
MCU, Shutdown to Active(1)			850 - 3000		µs
MCU, Standby to Active			160		µs
MCU, Active to Standby			36		µs
MCU, Idle to Active			14		µs

(1) The wakeup time is dependent on remaining charge on VDDR capacitor when starting the device, and thus how long the device has been in Reset or Shutdown before starting up again.

版权 © 2018–2019, Texas Instruments Incorporated

5.13.1 Clock Specifications

Table 5-3. 48 MHz Crystal Oscillator (XOSC_HF)

Measured on a Texas Instruments reference design with T_c = 25 °C, V_{DDS} = 3.0 V, unless otherwise noted.(1)

	PARAMETER	MIN	TYP	MAX	UNIT
	Crystal frequency		48		MHz
ESR	Equivalent series resistance 6 pF < C_L ≤ 9 pF		20	60	Ω
ESR	Equivalent series resistance 5 pF < C_L ≤ 6 pF			80	Ω
L_M	Motional inductance, relates to the load capacitance that is used for the crystal (C_L in Farads)(2)		< 3 × 10^{-24} / C_L^2		H
C_L	Crystal load capacitance(3)	5	7(4)	9	pF
	Start-up time(5)		200		µs

(1) Probing or otherwise stopping the crystal while the DC/DC converter is enabled may cause permanent damage to the device.
(2) The crystal manufacturer's specification must satisfy this requirement for proper operation.
(3) Adjustable load capacitance is integrated into the device.
(4) On-chip default connected capacitance including reference design parasitic capacitance. Connected internal capacitance is changed through software in the Customer Configuration section (CCFG).
(5) Start-up time using the TI-provided power driver. Start-up time may increase if driver is not used.

Table 5-4. 48 MHz RC Oscillator (RCOSC_HF)

Measured on a Texas Instruments reference design with T_c = 25 °C, V_{DDS} = 3.0 V, unless otherwise noted.

	MIN	TYP	MAX	UNIT
Frequency		48		MHz
Uncalibrated frequency accuracy		±1		%
Calibrated frequency accuracy(1)		±0.25		%
Start-up time		5		µs

(1) Accuracy relative to the calibration source (XOSC_HF)

Table 5-5. 2 MHz RC Oscillator (RCOSC_MF)

Measured on a Texas Instruments reference design with T_c = 25 °C, V_{DDS} = 3.0 V, unless otherwise noted.

	MIN	TYP	MAX	UNIT
Calibrated frequency		2		MHz
Start-up time		5		µs

Table 5-6. 32.768 kHz Crystal Oscillator (XOSC_LF)

Measured on a Texas Instruments reference design with T_c = 25 °C, V_{DDS} = 3.0 V, unless otherwise noted.

		MIN	TYP	MAX	UNIT
	Crystal frequency		32.768		kHz
ESR	Equivalent series resistance		30	100	kΩ
C_L	Crystal load capacitance	6	7(1)	12	pF

(1) Default load capacitance using TI reference designs including parasitic capacitance. Crystals with different load capacitance may be used.

Table 5-7. 32 kHz RC Oscillator (RCOSC_LF)

Measured on a Texas Instruments reference design with T_c = 25 °C, V_{DDS} = 3.0 V, unless otherwise noted.

	MIN	TYP	MAX	UNIT
Calibrated frequency		32.8 (1)		kHz
Temperature coefficient		50		ppm/°C

(1) When using RCOSC_LF as source for the low frequency system clock (SCLK_LF), the accuracy of the SCLK_LF-derived Real Time Clock (RTC) can be improved by measuring RCOSC_LF relative to XOSC_HF and compensating for the RTC tick speed. This functionality is available through the TI-provided Power driver.

Copyright © 2018–2019, Texas Instruments Incorporated

5.13.2 Synchronous Serial Interface (SSI) Characteristics

Table 5-8. Synchronous Serial Interface (SSI) Characteristics

over operating free-air temperature range (unless otherwise noted)

PARAMETER NO.	PARAMETER		MIN	TYP	MAX	UNIT
S1	t_{clk_per}	SSIClk cycle time	12		65024	System Clocks (1)
S2 (2)	t_{clk_high}	SSIClk high time		0.5		t_{clk_per}
S3 (2)	t_{clk_low}	SSIClk low time		0.5		t_{clk_per}

(1) When using the TI-provided Power driver, the SSI system clock is always 48 MHz.
(2) Refer to SSI timing diagrams 图 5-1, 图 5-2, and 图 5-3.

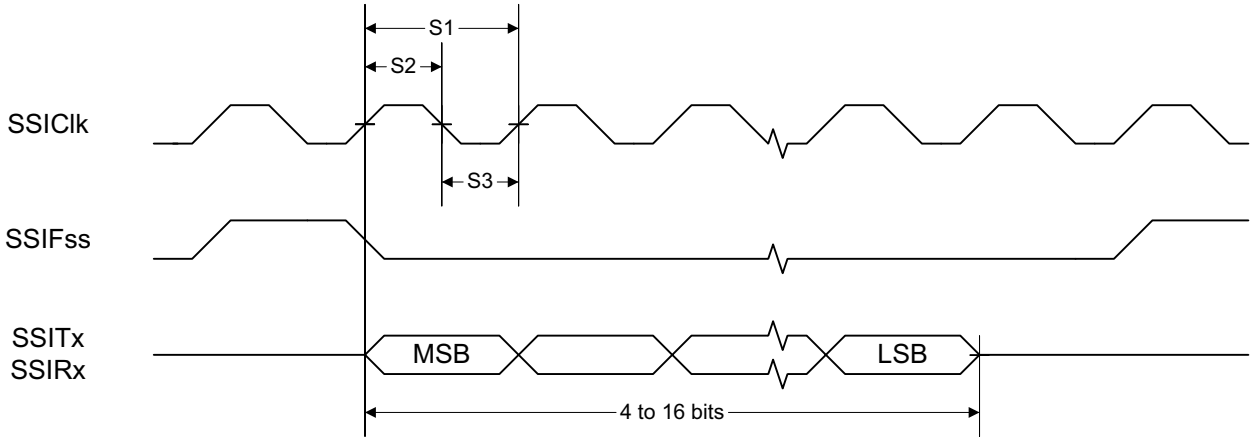

图 5-1. SSI Timing for TI Frame Format (FRF = 01), Single Transfer Timing Measurement

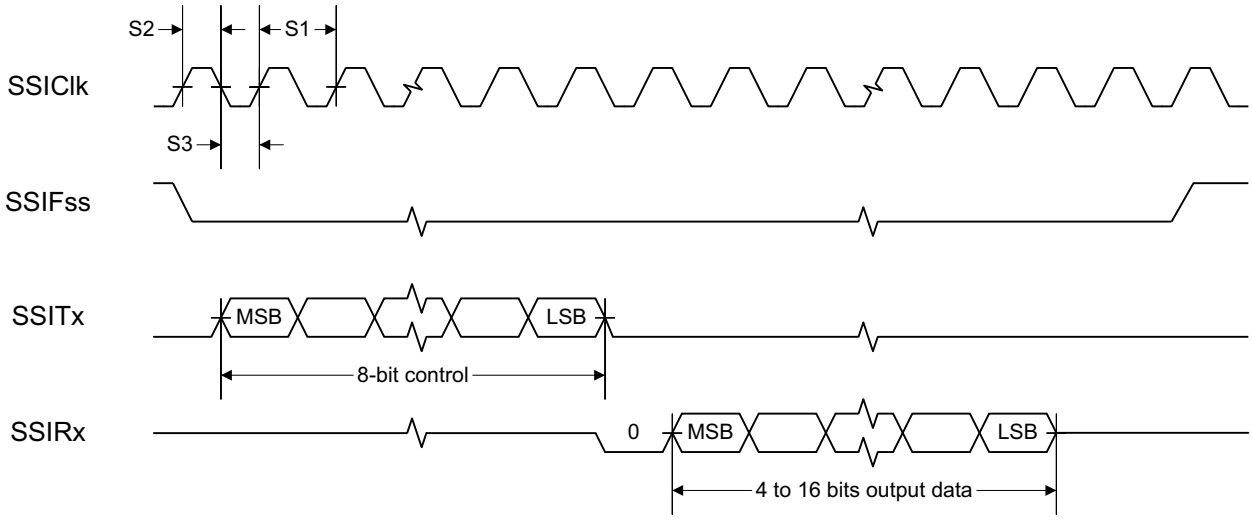

图 5-2. SSI Timing for MICROWIRE Frame Format (FRF = 10), Single Transfer

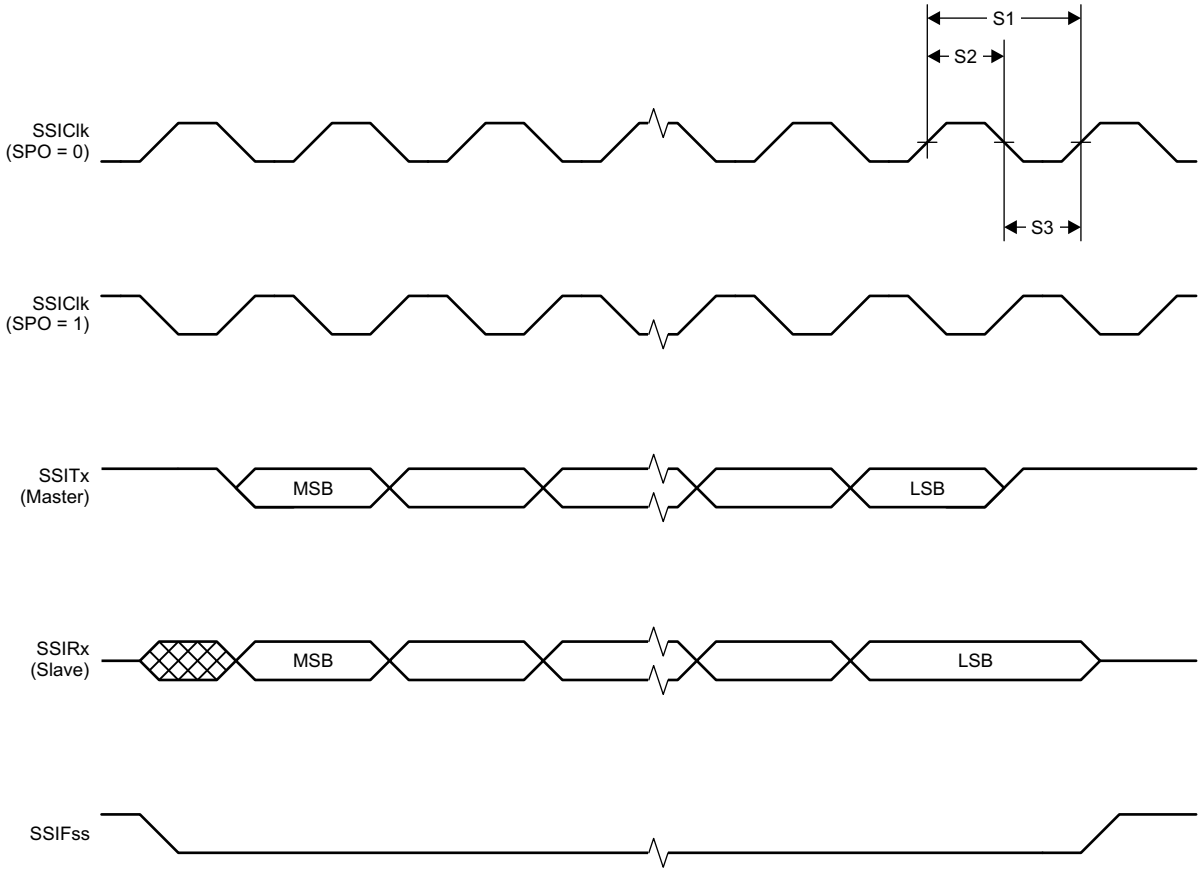

图 5-3. SSI Timing for SPI Frame Format (FRF = 00), With SPH = 1

5.13.3 UART

Table 5-9. UART Characteristics

over operating free-air temperature range (unless otherwise noted)

PARAMETER	MIN	TYP	MAX	UNIT
UART rate			3	MBaud

版权 © 2018–2019, Texas Instruments Incorporated

5.14 Peripheral Characteristics

5.14.1 ADC

Table 5-10. Analog-to-Digital Converter (ADC) Characteristics

T_c = 25 °C, V_{DDS} = 3.0 V and voltage scaling enabled, unless otherwise noted.(1)
Performance numbers require use of offset and gain adjustments in software by TI-provided ADC drivers.

PARAMETER		TEST CONDITIONS	MIN	TYP	MAX	UNIT
	Input voltage range		0		VDDS	V
	Resolution			12		Bits
	Sample Rate				200	ksps
	Offset	Internal 4.3 V equivalent reference(2)		–0.24		LSB
	Gain error	Internal 4.3 V equivalent reference(2)		7.14		LSB
DNL(3)	Differential nonlinearity			>–1		LSB
INL	Integral nonlinearity			±4		LSB
ENOB	Effective number of bits	Internal 4.3 V equivalent reference(2), 200 kSamples/s, 9.6 kHz input tone		9.8		Bits
		Internal 4.3 V equivalent reference(2), 200 kSamples/s, 9.6 kHz input tone, DC/DC enabled		9.8		
		VDDS as reference, 200 kSamples/s, 9.6 kHz input tone		10.1		
		Internal reference, voltage scaling disabled, 32 samples average, 200 kSamples/s, 300 Hz input tone		11.1		
		Internal reference, voltage scaling disabled, 14-bit mode, 200 kSamples/s, 300 Hz input tone (4)		11.3		
		Internal reference, voltage scaling disabled, 15-bit mode, 200 kSamples/s, 300 Hz input tone (4)		11.6		
THD	Total harmonic distortion	Internal 4.3 V equivalent reference(2), 200 kSamples/s, 9.6 kHz input tone		–65		Bits
		VDDS as reference, 200 kSamples/s, 9.6 kHz input tone		–70		
		Internal reference, voltage scaling disabled, 32 samples average, 200 kSamples/s, 300 Hz input tone		–72		
SINAD, SNDR	Signal-to-noise and distortion ratio	Internal 4.3 V equivalent reference(2), 200 kSamples/s, 9.6 kHz input tone		60		dB
		VDDS as reference, 200 kSamples/s, 9.6 kHz input tone		63		
		Internal reference, voltage scaling disabled, 32 samples average, 200 kSamples/s, 300 Hz input tone		68		
SFDR	Spurious-free dynamic range	Internal 4.3 V equivalent reference(2), 200 kSamples/s, 9.6 kHz input tone		70		dB
		VDDS as reference, 200 kSamples/s, 9.6 kHz input tone		73		
		Internal reference, voltage scaling disabled, 32 samples average, 200 kSamples/s, 300 Hz input tone		75		
	Conversion time	Serial conversion, time-to-output, 24 MHz clock		50		Clock Cycles
	Current consumption	Internal 4.3 V equivalent reference(2)		0.42		mA
	Current consumption	VDDS as reference		0.6		mA
	Reference voltage	Equivalent fixed internal reference (input voltage scaling enabled). For best accuracy, the ADC conversion should be initiated through the TI-RTOS API in order to include the gain/offset compensation factors stored in FCFG1		4.3(2)(5)		V
	Reference voltage	Fixed internal reference (input voltage scaling disabled). For best accuracy, the ADC conversion should be initiated through the TI-RTOS API in order to include the gain/offset compensation factors stored in FCFG1. This value is derived from the scaled value (4.3 V) as follows: V_{ref} = 4.3 V × 1408 / 4095		1.48		V
	Reference voltage	VDDS as reference, input voltage scaling enabled		VDDS		V
	Reference voltage	VDDS as reference, input voltage scaling disabled		VDDS / 2.82(5)		V

(1) Using IEEE Std 1241-2010 for terminology and test methods
(2) Input signal scaled down internally before conversion, as if voltage range was 0 to 4.3 V
(3) No missing codes
(4) ADC_output = Σ(4^n samples) >> n, n = desired extra bits
(5) Applied voltage must be within Absolute Maximum Ratings (see Section 5.1) at all times

Copyright © 2018–2019, Texas Instruments Incorporated

Table 5-10. Analog-to-Digital Converter (ADC) Characteristics (continued)

T_c = 25 °C, V_{DDS} = 3.0 V and voltage scaling enabled, unless otherwise noted.(1)

Performance numbers require use of offset and gain adjustments in software by TI-provided ADC drivers.

PARAMETER		TEST CONDITIONS	MIN	TYP	MAX	UNIT
	Input impedance	200 kSamples/s, voltage scaling enabled. Capacitive input, Input impedance depends on sampling frequency and sampling time		>1		MΩ

版权 © 2018–2019, Texas Instruments Incorporated

5.14.2 DAC

Table 5-11. Digital-to-Analog Converter (DAC) Characteristics

T_c = 25 °C, V_{DDS} = 3.0 V, unless otherwise noted.

PARAMETER		TEST CONDITIONS	MIN	TYP	MAX	UNIT
General Parameters						
	Resolution			8		Bits
V_{DDS}	Supply voltage	Any load, any V_{REF}, pre-charge OFF, DAC charge-pump ON	1.8		3.8	V
		External Load(1), any V_{REF}, pre-charge OFF, DAC charge-pump OFF	2.0		3.8	
		Any load, V_{REF} = DCOUPL, pre-charge ON	2.6		3.8	
F_{DAC}	Clock frequency	Buffer ON (recommended for external load)	16		250	kHz
		Buffer OFF (internal load)	16		1000	
	Voltage output settling time	V_{REF} = VDDS, buffer OFF, internal load		13		1 / F_{DAC}
		V_{REF} = VDDS, buffer ON, external capacitive load = 20 pF(2)		13.8		
	External capacitive load			20	200	pF
	External resistive load		10			MΩ
	Short circuit current				400	µA
Z_{MAX}	Max output impedance Vref = VDDS, buffer ON, CLK 250 kHz	VDDS = 3.8 V, DAC charge-pump OFF		50.8		kΩ
		VDDS = 3.0 V, DAC charge-pump ON		51.7		
		VDDS = 3.0 V, DAC charge-pump OFF		53.2		
		VDDS = 2.0 V, DAC charge-pump ON		48.7		
		VDDS = 2.0 V, DAC charge-pump OFF		70.2		
		VDDS = 1.8 V, DAC charge-pump ON		46.3		
		VDDS = 1.8 V, DAC charge-pump OFF		88.9		
Internal Load - Continuous Time Comparator / Low Power Clocked Comparator						
DNL	Differential nonlinearity	V_{REF} = VDDS, load = Continuous Time Comparator or Low Power Clocked Comparator F_{DAC} = 250 kHz		±1		LSB(3)
	Differential nonlinearity	V_{REF} = VDDS, load = Continuous Time Comparator or Low Power Clocked Comparator F_{DAC} = 16 kHz		±1.2		
	Offset error(4) Load = Continuous Time Comparator	V_{REF} = VDDS = 3.8 V		±0.64		LSB(3)
		V_{REF} = VDDS = 3.0 V		±0.81		
		V_{REF} = VDDS = 1.8 V		±1.27		
		V_{REF} = DCOUPL, pre-charge ON		±3.43		
		V_{REF} = DCOUPL, pre-charge OFF		±2.88		
		V_{REF} = ADCREF		±2.37		
	Offset error(4) Load = Low Power Clocked Comparator	V_{REF} = VDDS = 3.8 V		±0.78		LSB(3)
		V_{REF} = VDDS = 3.0 V		±0.77		
		V_{REF} = VDDS = 1.8 V		±3.46		
		V_{REF} = DCOUPL, pre-charge ON		±3.44		
		V_{REF} = DCOUPL, pre-charge OFF		±4.70		
		V_{REF} = ADCREF		±4.11		
	Max code output voltage variation(4) Load = Continuous Time Comparator	V_{REF} = VDDS = 3.8 V		±1.53		LSB(3)
		V_{REF} = VDDS = 3.0 V		±1.71		
		V_{REF} = VDDS = 1.8 V		±2.10		
		V_{REF} = DCOUPL, pre-charge ON		±6.00		
		V_{REF} = DCOUPL, pre-charge OFF		±3.85		
		V_{REF} = ADCREF		±5.84		

(1) Keysight 34401A Multimeter
(2) A load > 20 pF will increases the settling time
(3) 1 LSB (V_{REF} 3.8 V/3.0 V/1.8 V/DCOUPL/ADCREF) = 14.10 mV/11.13 mV/6.68 mV/4.67 mV/5.48 mV
(4) Includes comparator offset

Copyright © 2018–2019, Texas Instruments Incorporated

Table 5-11. Digital-to-Analog Converter (DAC) Characteristics (continued)

T_c = 25 °C, V_{DDS} = 3.0 V, unless otherwise noted.

PARAMETER		TEST CONDITIONS	MIN	TYP	MAX	UNIT
	Max code output voltage variation(4) Load = Low Power Clocked Comparator	V_{REF} = VDDS = 3.8 V		±2.92		LSB(3)
		V_{REF} =VDDS = 3.0 V		±3.06		
		V_{REF} = VDDS = 1.8 V		±3.91		
		V_{REF} = DCOUPL, pre-charge ON		±7.84		
		V_{REF} = DCOUPL, pre-charge OFF		±4.06		
		V_{REF} = ADCREF		±6.94		
	Output voltage range(4) Load = Continuous Time Comparator	V_{REF} = VDDS = 3.8 V, code 1		0.03		V
		V_{REF} = VDDS = 3.8 V, code 255		3.62		
		V_{REF} = VDDS = 3.0 V, code 1		0.02		
		V_{REF} = VDDS = 3.0 V, code 255		2.86		
		V_{REF} = VDDS = 1.8 V, code 1		0.01		
		V_{REF} = VDDS = 1.8 V, code 255		1.71		
		V_{REF} = DCOUPL, pre-charge OFF, code 1		0.01		
		V_{REF} = DCOUPL, pre-charge OFF, code 255		1.21		
		V_{REF} = DCOUPL, pre-charge ON, code 1		1.27		
		V_{REF} = DCOUPL, pre-charge ON, code 255		2.46		
		V_{REF} = ADCREF, code 1		0.01		
		V_{REF} = ADCREF, code 255		1.41		
	Output voltage range(4) Load = Low Power Clocked Comparator	V_{REF} = VDDS = 3.8 V, code 1		0.03		V
		V_{REF} = VDDS = 3.8 V, code 255		3.61		
		V_{REF} = VDDS = 3.0 V, code 1		0.02		
		V_{REF} = VDDS = 3.0 V, code 255		2.85		
		V_{REF} = VDDS = 1.8 V, code 1		0.01		
		V_{REF} = VDDS = 1.8 V, code 255		1.71		
		V_{REF} = DCOUPL, pre-charge OFF, code 1		0.01		
		V_{REF} = DCOUPL, pre-charge OFF, code 255		1.21		
		V_{REF} = DCOUPL, pre-charge ON, code 1		1.27		
		V_{REF} = DCOUPL, pre-charge ON, code 255		2.46		
		V_{REF} = ADCREF, code 1		0.01		
		V_{REF} = ADCREF, code 255		1.41		
External Load (Keysight 34401A Multimeter)						
INL	Integral nonlinearity	V_{REF} = VDDS, F_{DAC} = 250 kHz		±1		LSB(3)
		V_{REF} = DCOUPL, F_{DAC} = 250 kHz		±1		
		V_{REF} = ADCREF, F_{DAC} = 250 kHz		±1		
DNL	Differential nonlinearity	V_{REF} = VDDS, F_{DAC} = 250 kHz		±1		LSB(3)
	Offset error	V_{REF} = VDDS = 3.8 V		±0.20		LSB(3)
		V_{REF} = VDDS = 3.0 V		±0.25		
		V_{REF} = VDDS = 1.8 V		±0.45		
		V_{REF} = DCOUPL, pre-charge ON		±1.55		
		V_{REF} = DCOUPL, pre-charge OFF		±1.30		
		V_{REF} = ADCREF		±1.10		
	Max code output voltage variation	V_{REF} = VDDS = 3.8 V		±0.60		LSB(3)
		V_{REF} = VDDS = 3.0 V		±0.55		
		V_{REF} = VDDS = 1.8 V		±0.60		
		V_{REF} = DCOUPL, pre-charge ON		±3.45		
		V_{REF} = DCOUPL, pre-charge OFF		±2.10		
		V_{REF} = ADCREF		±1.90		

Copyright © 2018–2019, Texas Instruments Incorporated

Table 5-11. Digital-to-Analog Converter (DAC) Characteristics (continued)

T_c = 25 °C, V_{DDS} = 3.0 V, unless otherwise noted.

PARAMETER		TEST CONDITIONS	MIN	TYP	MAX	UNIT
	Output voltage range Load = Low Power Clocked Comparator	V_{REF} = VDDS = 3.8 V, code 1		0.03		V
		V_{REF} = VDDS = 3.8 V, code 255		3.61		
		V_{REF} = VDDS = 3.0 V, code 1		0.02		
		V_{REF} = VDDS = 3.0 V, code 255		2.85		
		V_{REF} = VDDS = 1.8 V, code 1		0.02		
		V_{REF} = VDDS = 1.8 V, code 255		1.71		
		V_{REF} = DCOUPL, pre-charge OFF, code 1		0.02		
		V_{REF} = DCOUPL, pre-charge OFF, code 255		1.20		
		V_{REF} = DCOUPL, pre-charge ON, code 1		1.27		
		V_{REF} = DCOUPL, pre-charge ON, code 255		2.46		
		V_{REF} = ADCREF, code 1		0.02		
		V_{REF} = ADCREF, code 255		1.42		

版权 © 2018–2019, Texas Instruments Incorporated

5.14.3 Temperature and Battery Monitor

Table 5-12. Temperature Sensor

Measured on a Texas Instruments reference design with T_c = 25 °C, V_{DDS} = 3.0 V, unless otherwise noted.

PARAMETER	TEST CONDITIONS	MIN	TYP	MAX	UNIT
Resolution			2		°C
Accuracy	-40 °C to 0 °C		±4.0		°C
Accuracy	0 °C to 85 °C		±2.5		°C
Supply voltage coefficient(1)			3.6		°C/V

(1) The temperature sensor is automatically compensated for VDDS variation when using the TI-provided driver.

Table 5-13. Battery Monitor

Measured on a Texas Instruments reference design with T_c = 25 °C, unless otherwise noted.

PARAMETER	TEST CONDITIONS	MIN	TYP	MAX	UNIT
Resolution			25		mV
Range		1.8		3.8	V
Integral nonlinearity (max)			23		mV
Accuracy	VDDS = 3.0 V		22.5		mV
Offset error			-32		mV
Gain error			-1		%

版权 © 2018–2019, Texas Instruments Incorporated

5.14.4 Comparators

Table 5-14. Continuous Time Comparator

T_c = 25°C, V_{DDS} = 3.0 V, unless otherwise noted.

PARAMETER	TEST CONDITIONS	MIN	TYP	MAX	UNIT
Input voltage range(1)		0		V_{DDS}	V
Offset	Measured at V_{DDS} / 2		±5		mV
Decision time	Step from –10 mV to 10 mV		0.78		µs
Current consumption	Internal reference		8.6		µA

(1) The input voltages can be generated externally and connected throughout I/Os or an internal reference voltage can be generated using the DAC

Table 5-15. Low-Power Clocked Comparator

T_c = 25 °C, V_{DDS} = 3.0 V, unless otherwise noted.

PARAMETER	TEST CONDITIONS	MIN	TYP	MAX	UNIT
Input voltage range		0		V_{DDS}	V
Clock frequency			SCLK_LF		
Internal reference voltage(1)	Using internal DAC with VDDS as reference voltage, DAC code = 0 - 255		0.024 - 2.865		V
Offset	Measured at V_{DDS} / 2, includes error from internal DAC			±5	mV
Decision time	Step from –50 mV to 50 mV		1		Clock Cycle

(1) The comparator can use an internal 8 bits DAC as its reference. The DAC output voltage range depends on the reference voltage selected. See Table 5-11

5.14.5 Current Source

Table 5-16. Programmable Current Source

T_c = 25 °C, V_{DDS} = 3.0 V, unless otherwise noted.

PARAMETER	TEST CONDITIONS	MIN	TYP	MAX	UNIT
Current source programmable output range (logarithmic range)			0.25 - 20		µA
Resolution			0.25		µA

版权 © 2018–2019, Texas Instruments Incorporated

5.14.6 GPIO

Table 5-17. GPIO DC Characteristics

PARAMETER	TEST CONDITIONS	MIN	TYP	MAX	UNIT
T_A = 25 °C, V_{DDS} = 1.8 V					
GPIO VOH at 8 mA load	IOCURR = 2, high-drive GPIOs only		1.56		V
GPIO VOL at 8 mA load	IOCURR = 2, high-drive GPIOs only		0.24		V
GPIO VOH at 4 mA load	IOCURR = 1		1.59		V
GPIO VOL at 4 mA load	IOCURR = 1		0.21		V
GPIO pullup current	Input mode, pullup enabled, Vpad = 0 V		73		µA
GPIO pulldown current	Input mode, pulldown enabled, Vpad = VDDS		19		µA
GPIO low-to-high input transition, with hysteresis	IH = 1, transition voltage for input read as 0 → 1		1.08		V
GPIO high-to-low input transition, with hysteresis	IH = 1, transition voltage for input read as 1 → 0		0.73		V
GPIO input hysteresis	IH = 1, difference between 0 → 1 and 1 → 0 points		0.35		V
T_A = 25 °C, V_{DDS} = 3.0 V					
GPIO VOH at 8 mA load	IOCURR = 2, high-drive GPIOs only		2.59		V
GPIO VOL at 8 mA load	IOCURR = 2, high-drive GPIOs only		0.42		V
GPIO VOH at 4 mA load	IOCURR = 1		2.63		V
GPIO VOL at 4 mA load	IOCURR = 1		0.40		V
T_A = 25 °C, V_{DDS} = 3.8 V					
GPIO pullup current	Input mode, pullup enabled, Vpad = 0 V		282		µA
GPIO pulldown current	Input mode, pulldown enabled, Vpad = VDDS		110		µA
GPIO low-to-high input transition, with hysteresis	IH = 1, transition voltage for input read as 0 → 1		1.97		V
GPIO high-to-low input transition, with hysteresis	IH = 1, transition voltage for input read as 1 → 0		1.55		V
GPIO input hysteresis	IH = 1, difference between 0 → 1 and 1 → 0 points		0.42		V
T_A = 25 °C					
VIH	Lowest GPIO input voltage reliably interpreted as a *High*	$0.8*V_{DDS}$			V
VIL	Highest GPIO input voltage reliably interpreted as a *Low*			$0.2*V_{DDS}$	V

版权 © 2018–2019, Texas Instruments Incorporated

5.15 Typical Characteristics

All measurements in this section are done with T_c = 25 °C and V_{DDS} = 3.0 V, unless otherwise noted. See *Recommended Operating Conditions*, Section 5.3, for device limits. Values exceeding these limits are for reference only.

5.15.1 MCU Current

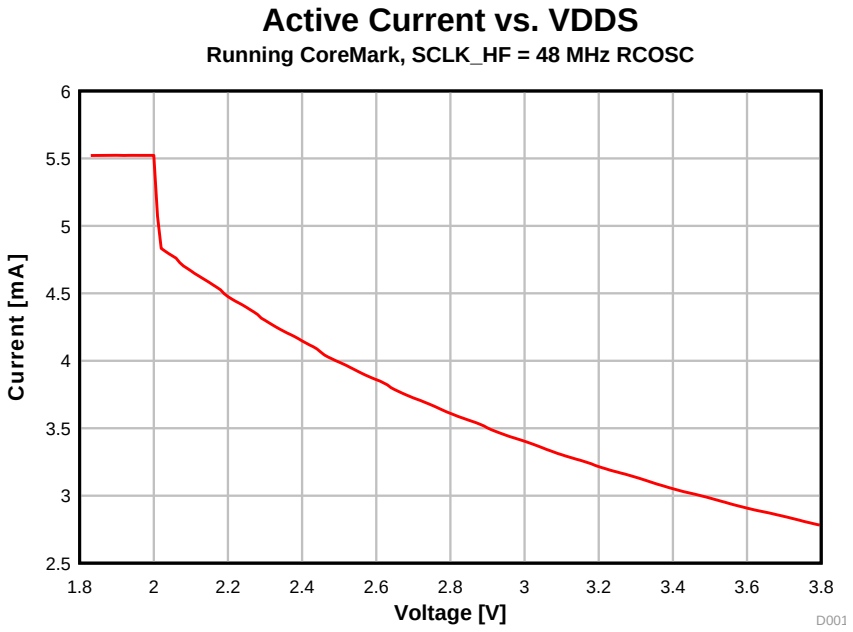

图 5-4. Active Mode (MCU) Current vs. Supply Voltage (VDDS)

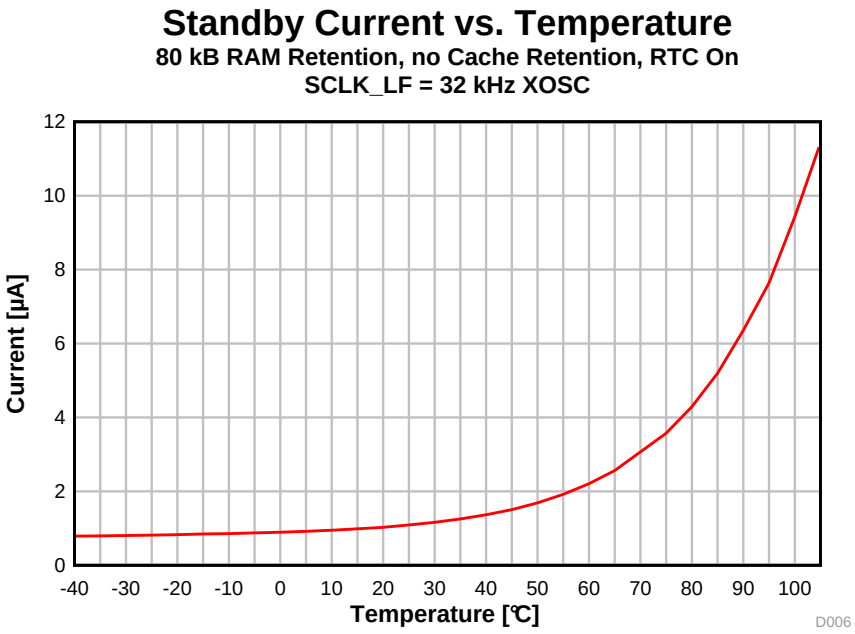

图 5-5. Standby Mode (MCU) Current vs. Temperature

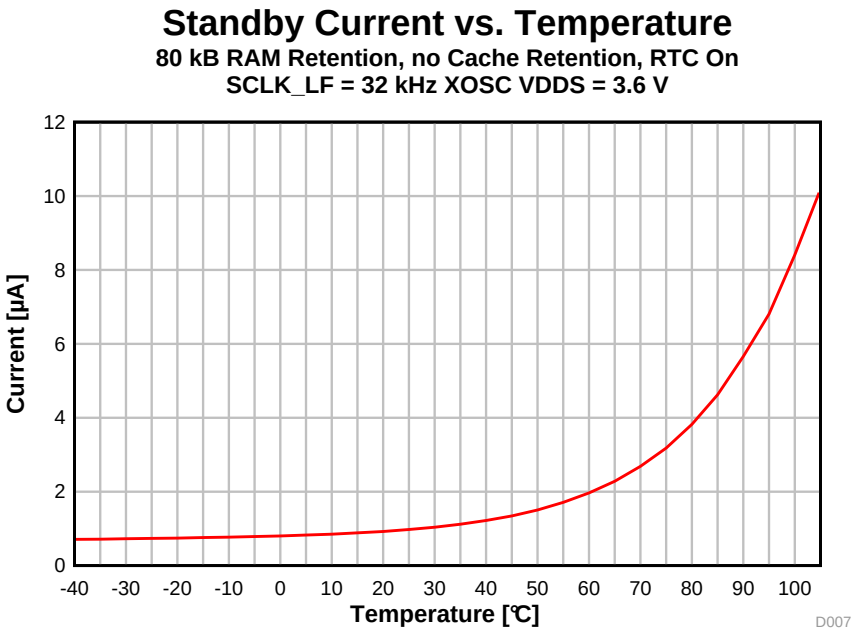

图 5-6. Standby Mode (MCU) Current vs. Temperature (VDDS = 3.6 V)

版权 © 2018–2019, Texas Instruments Incorporated

5.15.2 RX Current

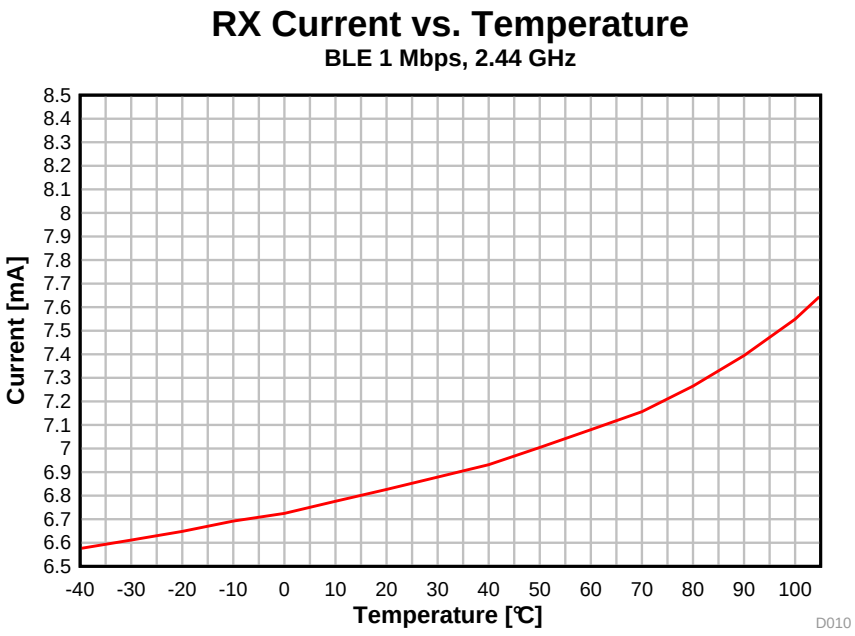

图 5-7. RX Current vs. Temperature (BLE 1 Mbps, 2.44 GHz)

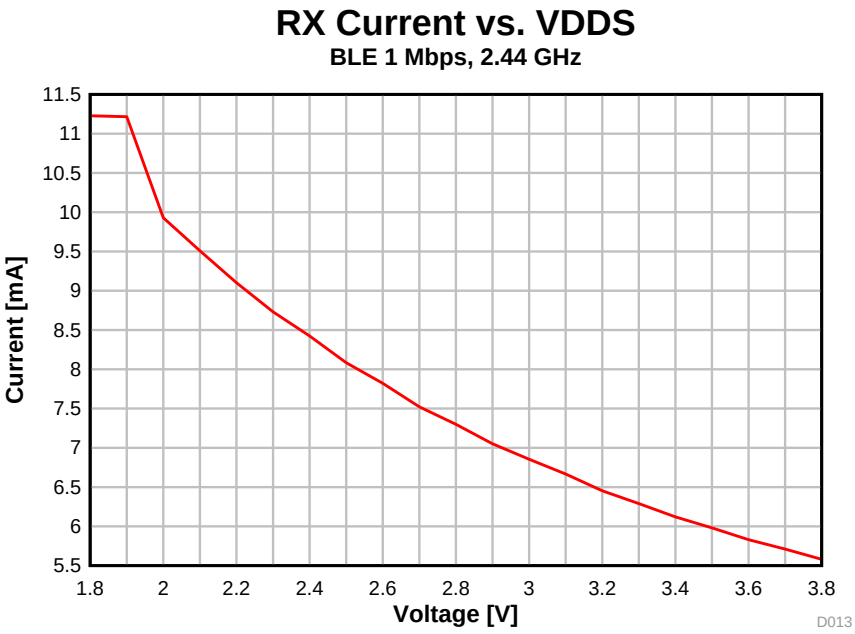

图 5-8. RX Current vs. Supply Voltage (VDDS) (BLE 1 Mbps, 2.44 GHz)

5.15.3 TX Current

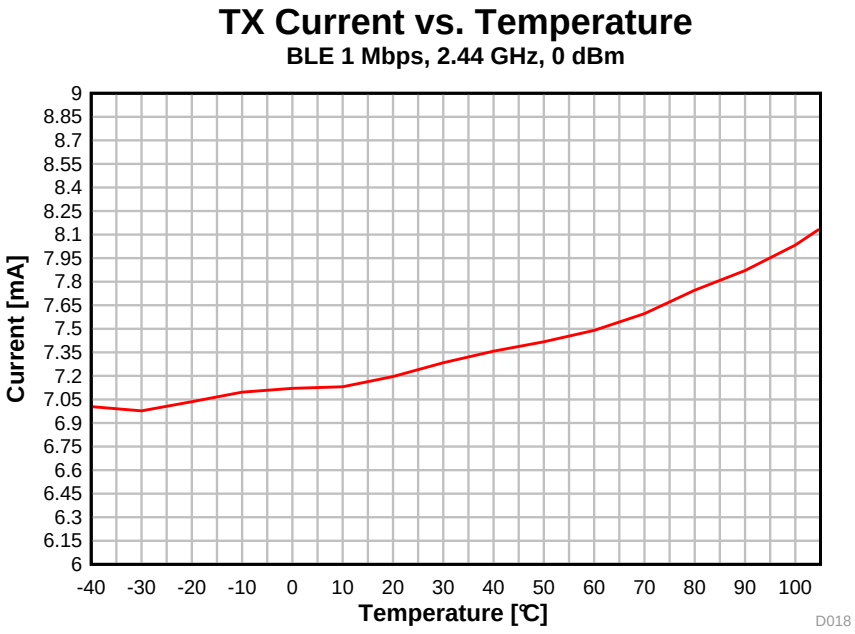

图 5-9. TX Current vs. Temperature (BLE 1 Mbps, 2.44 GHz)

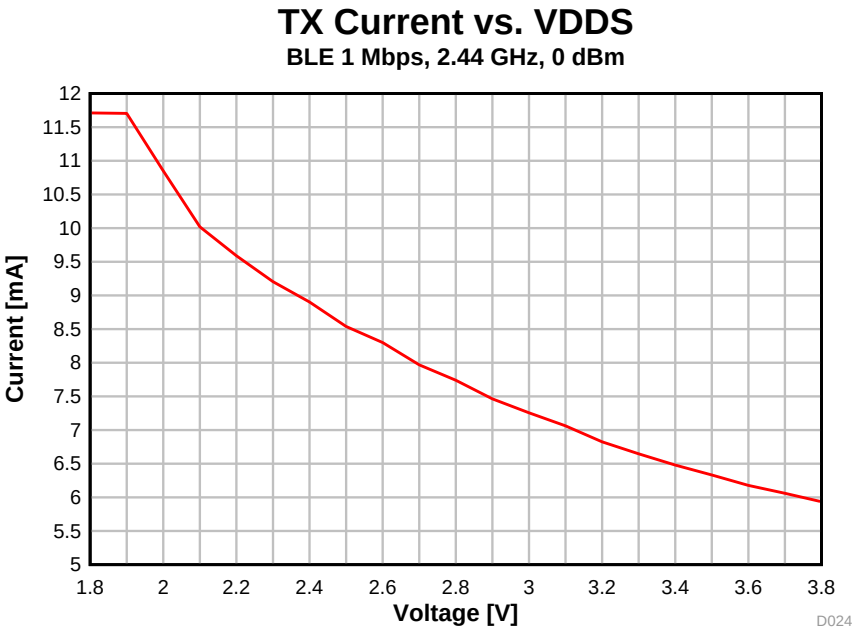

图 5-10. TX Current vs. Supply Voltage (VDDS) (BLE 1 Mbps, 2.44 GHz)

版权 © 2018–2019, Texas Instruments Incorporated

表 5-18 shows typical TX current and output power for different output power settings.

表 5-18. Typical TX Current and Output Power

CC2652R at 2.4 GHz, VDDS = 3.0 V (Measured on CC2652REM-7ID)			
txPower	**TX Power Setting (SmartRF Studio)**	**Typical Output Power [dBm]**	**Typical Current Consumption [mA]**
0x7217	5	4.9	9.5
0x4E63	4	3.9	9.0
0x385D	3	2.8	8.6
0x3259	2	1.8	8.0
0x2856	1	0.9	7.6
0x2853	0	-0.3	7.3
0x12D6	-5	-4.9	6.2
0x0ACF	-10	-9.4	5.6
0x06CA	-15	-14.5	5.2
0x04C6	-20	-20.3	4.8

版权 © 2018–2019, Texas Instruments Incorporated

5.15.4 RX Performance

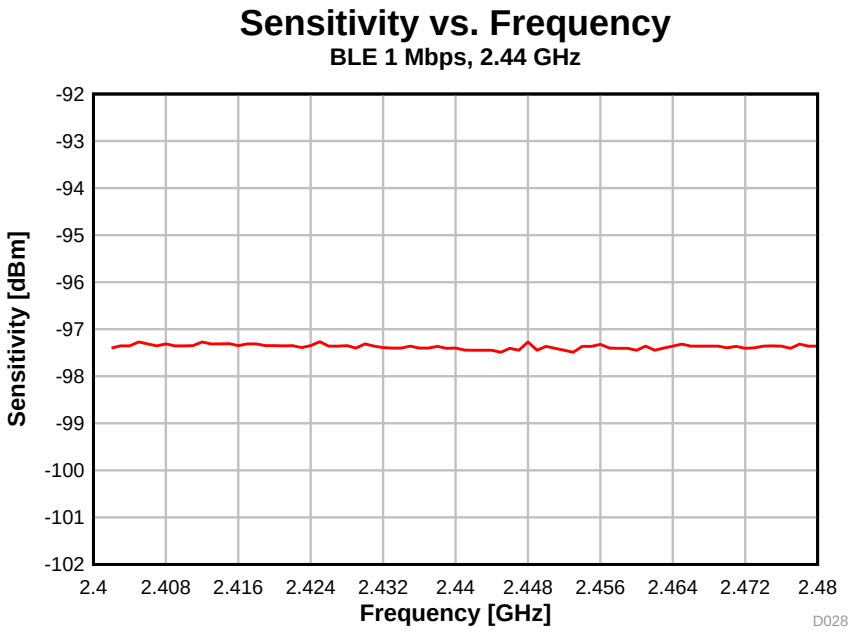

图 5-11. Sensitivity vs. Frequency (BLE 1 Mbps, 2.44 GHz)

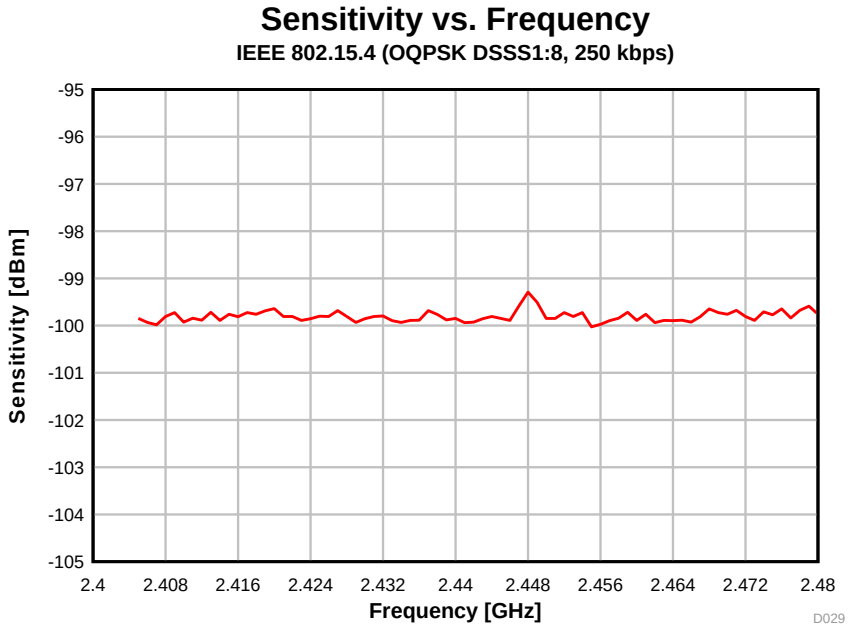

图 5-12. Sensitivity vs. Frequency (250 kbps, 2.44 GHz)

版权 © 2018–2019, Texas Instruments Incorporated

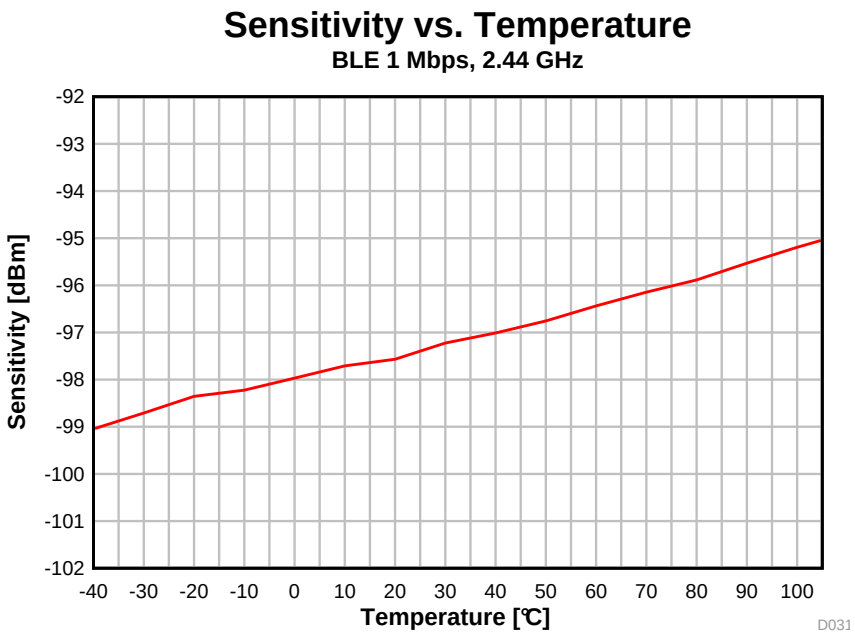

图 5-13. Sensitivity vs. Temperature (BLE 1 Mbps, 2.44 GHz)

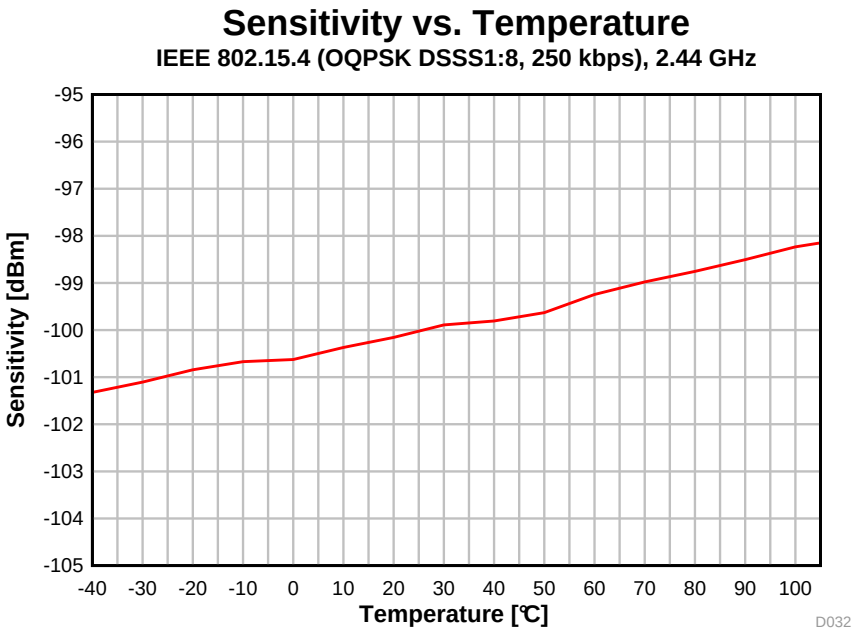

图 5-14. Sensitivity vs. Temperature (250 kbps, 2.44 GHz)

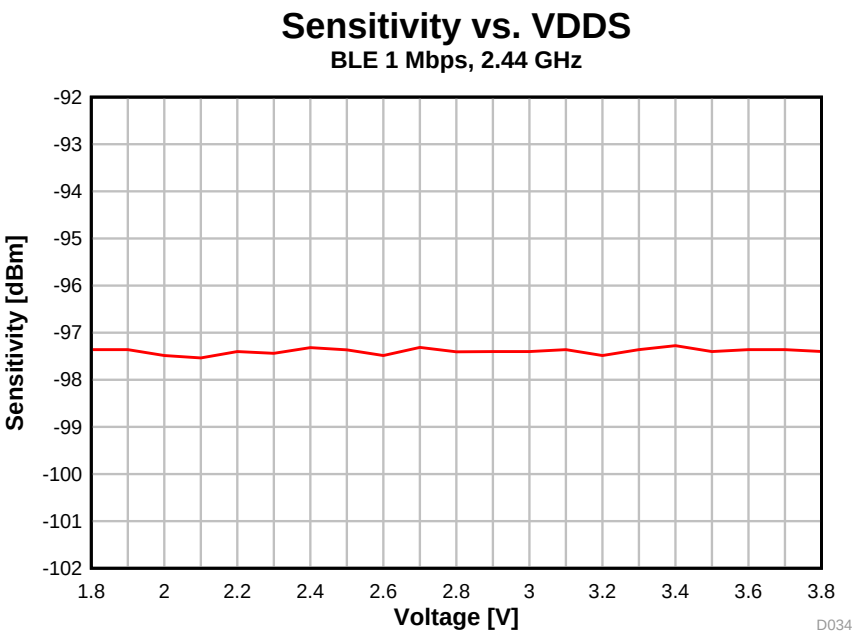

图 5-15. Sensitivity vs. Supply Voltage (VDDS) (BLE 1 Mbps, 2.44 GHz)

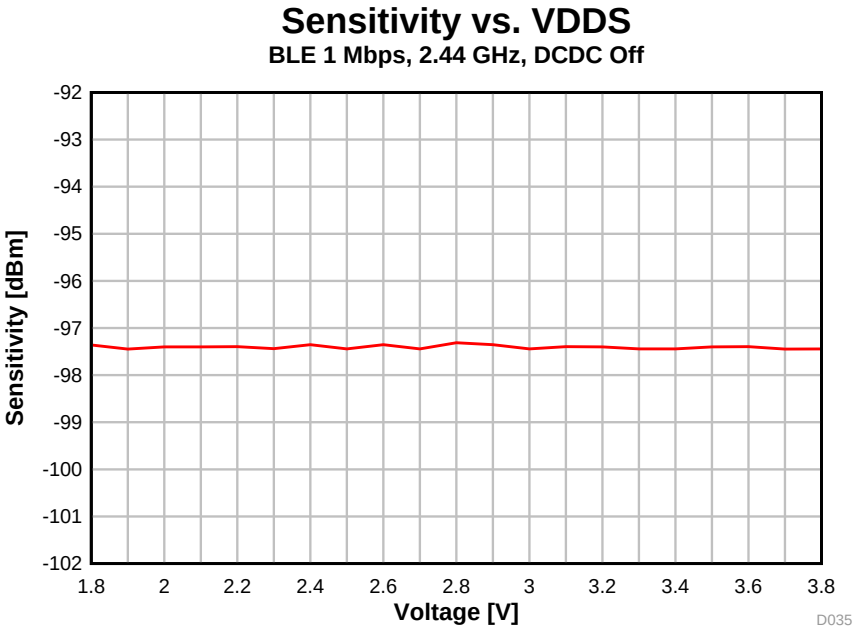

图 5-16. Sensitivity vs. Supply Voltage (VDDS) (BLE 1 Mbps, 2.44 GHz, DCDC Off)

版权 © 2018–2019, Texas Instruments Incorporated

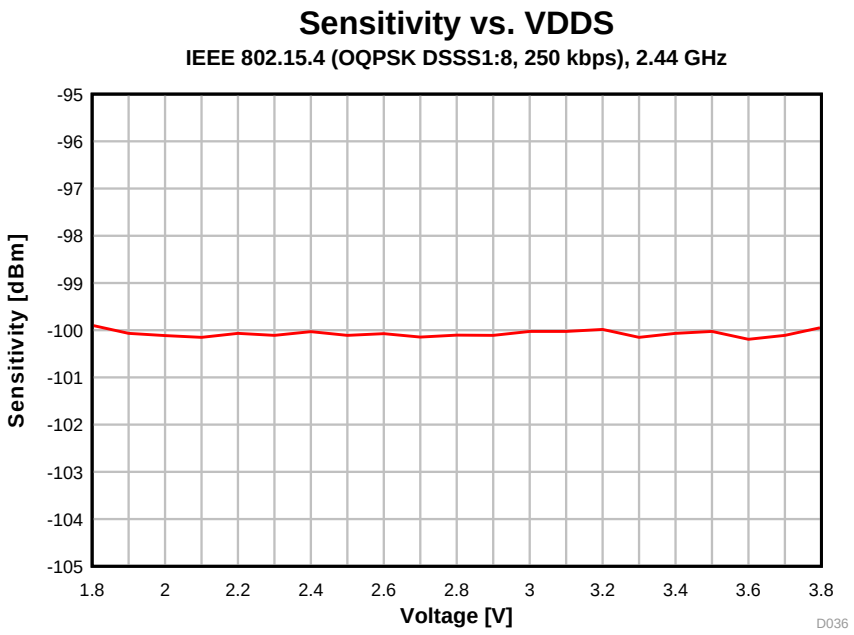

图 5-17. Sensitivity vs. Supply Voltage (VDDS) (250 kbps, 2.44 GHz)

5.15.5 TX Performance

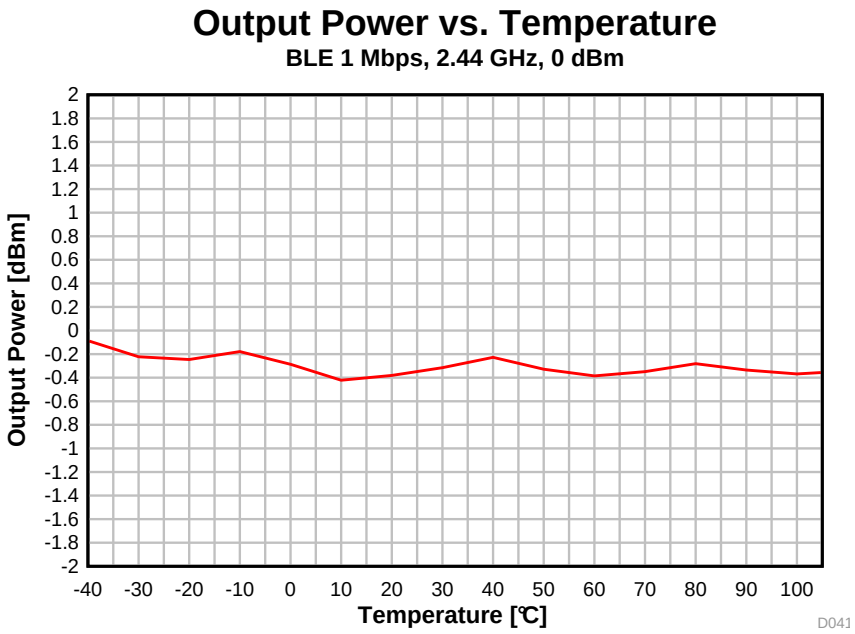

图 5-18. Output Power vs. Temperature (BLE 1 Mbps, 2.44 GHz)

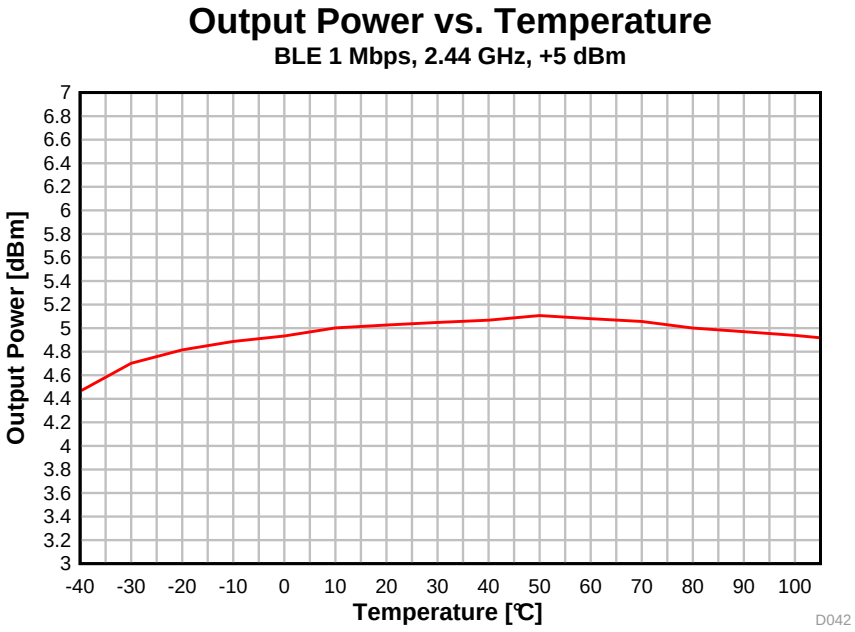

图 5-19. Output Power vs. Temperature (BLE 1 Mbps, 2.44 GHz, +5 dBm)

版权 © 2018–2019, Texas Instruments Incorporated

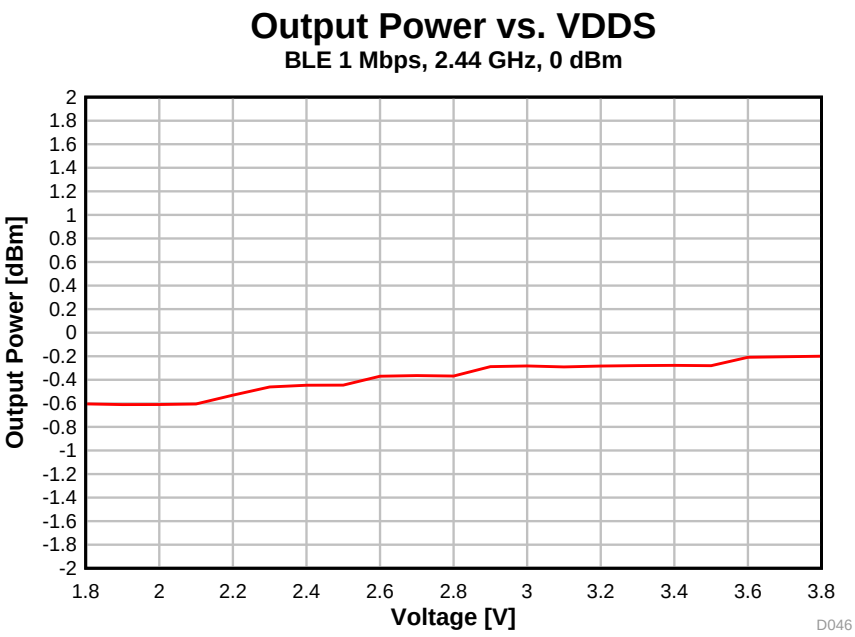

图 5-20. Output Power vs. Supply Voltage (VDDS) (BLE 1 Mbps, 2.44 GHz)

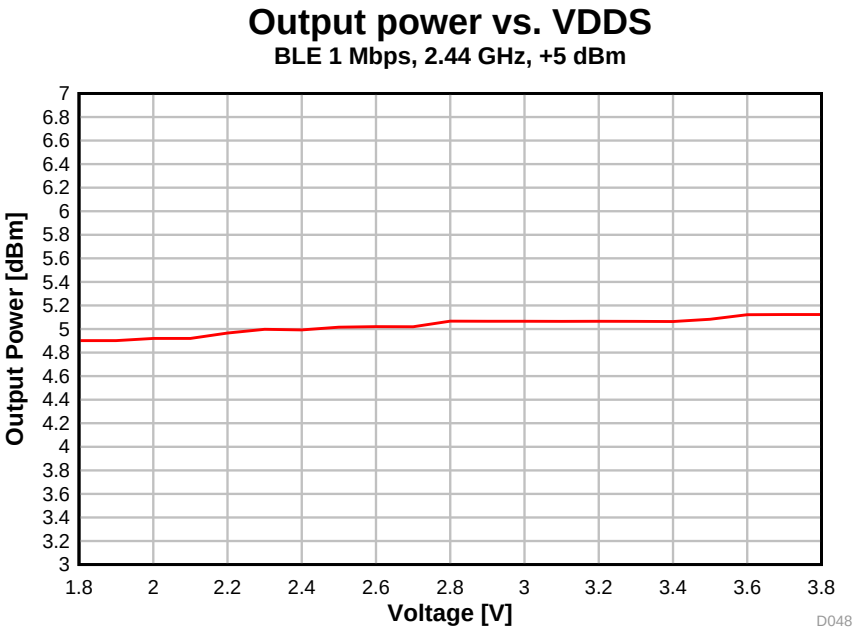

图 5-21. Output Power vs. Supply Voltage (VDDS) (BLE 1 Mbps, 2.44 GHz, +5 dBm)

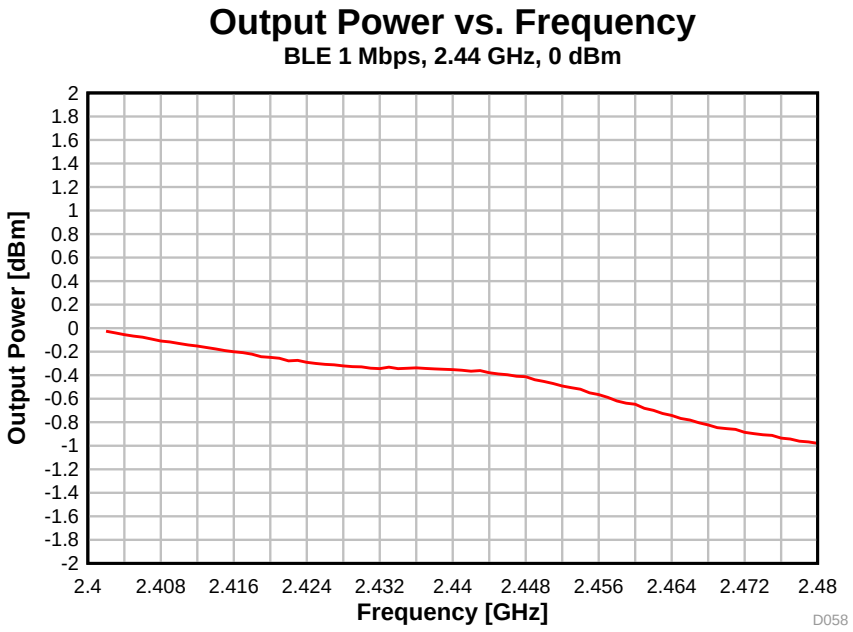

图 5-22. Output Power vs. Frequency (BLE 1 Mbps, 2.44 GHz)

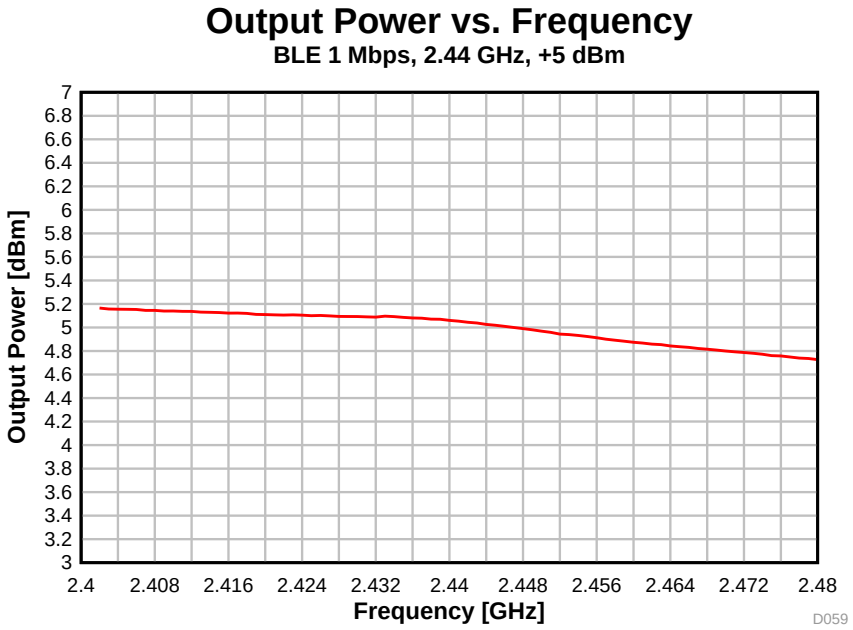

图 5-23. Output Power vs. Frequency (BLE 1 Mbps, 2.44 GHz, +5 dBm)

版权 © 2018–2019, Texas Instruments Incorporated

5.15.6 ADC Performance

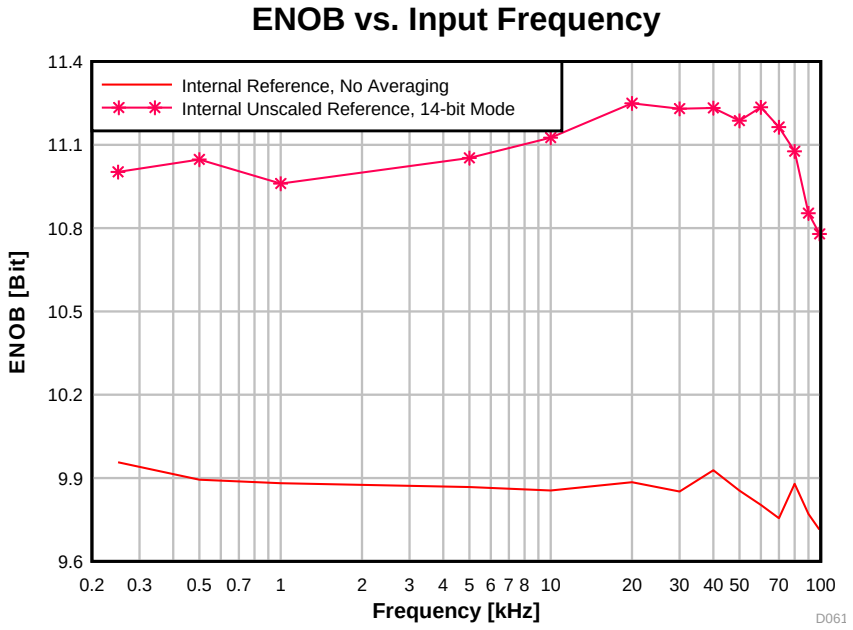

图 5-24. ENOB vs. Input Frequency

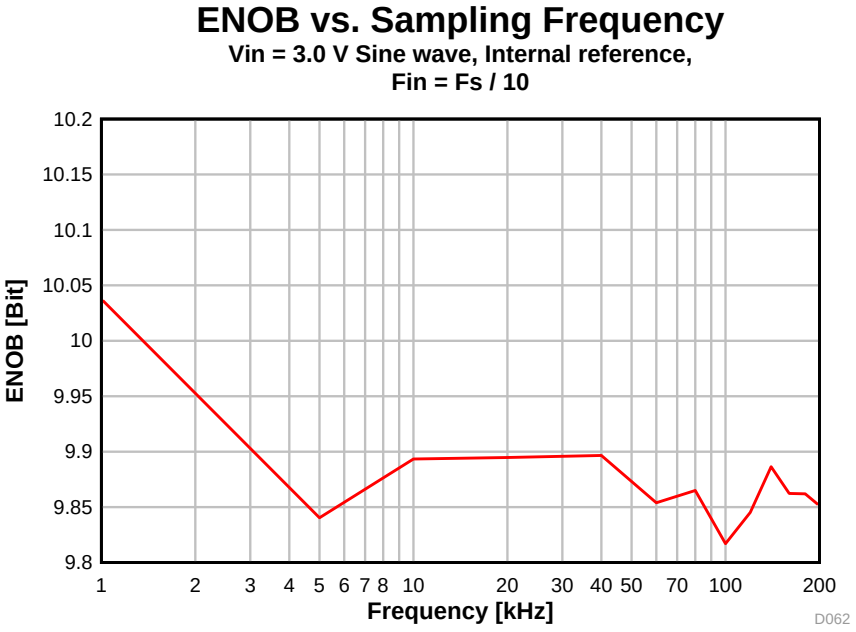

图 5-25. ENOB vs. Sampling Frequency

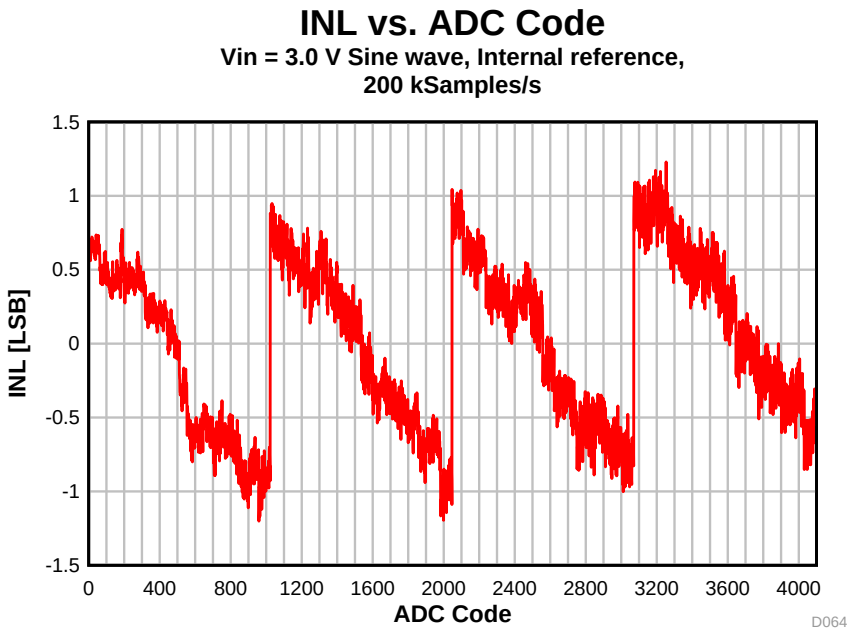

图 5-26. INL vs. ADC Code

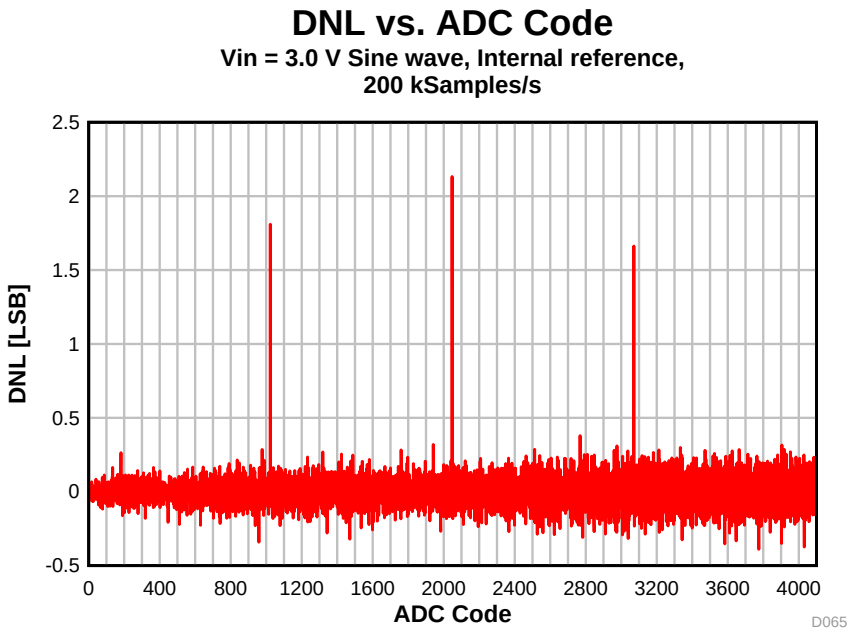

图 5-27. DNL vs. ADC Code

版权 © 2018–2019, Texas Instruments Incorporated

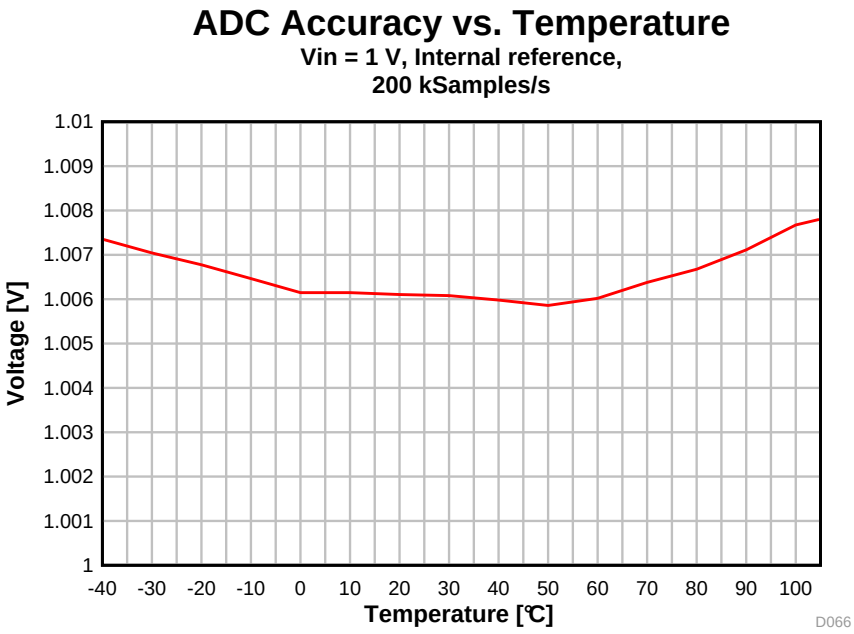

图 5-28. ADC Accuracy vs. Temperature

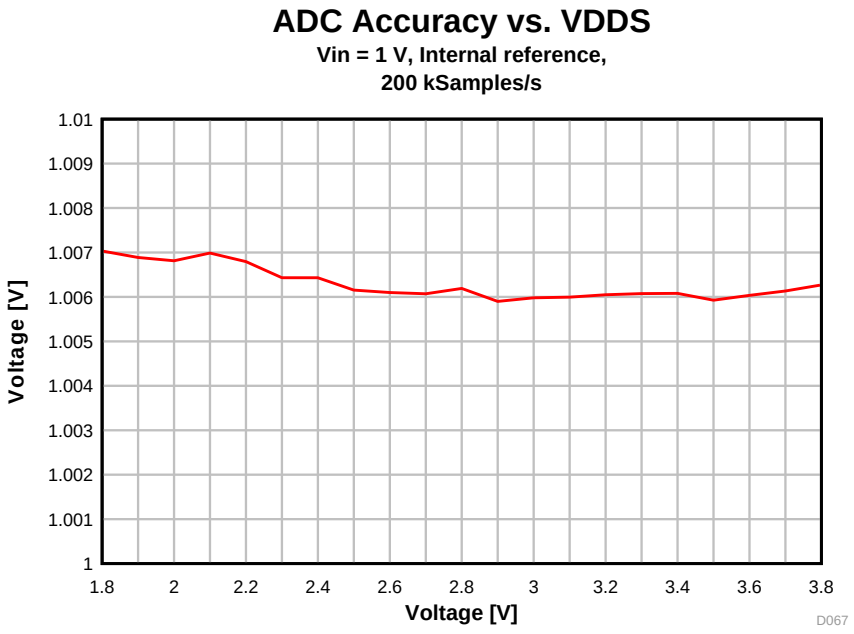

图 5-29. ADC Accuracy vs. Supply Voltage (VDDS)

6 Detailed Description

6.1 Overview

Section 1.4 shows the core modules of the CC2652R device.

6.2 System CPU

The CC2652R SimpleLink™ Wireless MCU contains an Arm® Cortex®-M4F system CPU, which runs the application and the higher layers of radio protocol stacks.

The system CPU is the foundation of a high-performance, low-cost platform that meets the system requirements of minimal memory implementation, and low-power consumption, while delivering outstanding computational performance and exceptional system response to interrupts.

Its features include the following:

- ARMv7-M architecture optimized for small-footprint embedded applications
- Arm Thumb®-2 mixed 16- and 32-bit instruction set delivers the high performance expected of a 32-bit Arm core in a compact memory size
- Fast code execution permits increased sleep mode time
- Deterministic, high-performance interrupt handling for time-critical applications
- Single-cycle multiply instruction and hardware divide
- Hardware division and fast digital-signal-processing oriented multiply accumulate
- Saturating arithmetic for signal processing
- IEEE 754-compliant single-precision Floating Point Unit (FPU)
- Memory Protection Unit (MPU) for safety-critical applications
- Full debug with data matching for watchpoint generation
  - Data Watchpoint and Trace Unit (DWT)
  - JTAG Debug Access Port (DAP)
  - Flash Patch and Breakpoint Unit (FPB)
- Trace support reduces the number of pins required for debugging and tracing
  - Instrumentation Trace Macrocell Unit (ITM)
  - Trace Port Interface Unit (TPIU) with asynchronous serial wire output (SWO)
- Optimized for single-cycle flash memory access
- Tightly connected to 8-KB 4-way random replacement cache for minimal active power consumption and wait states
- Ultra-low-power consumption with integrated sleep modes
- 48 MHz operation
- 1.25 DMIPS per MHz

版权 © 2018–2019, Texas Instruments Incorporated

6.3 Radio (RF Core)

The RF Core is a highly flexible and future proof radio module which contains an Arm Cortex-M0 processor that interfaces the analog RF and base-band circuitry, handles data to and from the system CPU side, and assembles the information bits in a given packet structure. The RF core offers a high level, command-based API to the main CPU that configurations and data are passed through. The Arm Cortex-M0 processor is not programmable by customers and is interfaced through the TI-provided RF driver that is included with the SimpleLink Software Development Kit (SDK).

The RF core can autonomously handle the time-critical aspects of the radio protocols, thus offloading the main CPU, which reduces power and leaves more resources for the user application. Several signals are also available to control external circuitry such as RF switches or range extenders autonomously.

Multiprotocol solutions are enabled through time-sliced access of the radio, handled transparently for the application through the TI-provided RF driver and dual-mode manager.

The various physical layer radio formats are partly built as a software defined radio where the radio behavior is either defined by radio ROM contents or by non-ROM radio formats delivered in form of firmware patches with the SimpleLink SDKs. This allows the radio platform to be updated for support of future versions of standards even with over-the-air (OTA) updates while still using the same silicon.

6.3.1 Bluetooth 5 low energy

The RF Core offers full support for Bluetooth 5 low energy, including the high-sped 2-Mbps physical layer and the 500-kbps and 125-kbps long range PHYs (Coded PHY) through the TI provided Bluetooth 5 stack or through a high-level Bluetooth API. The Bluetooth 5 PHY and part of the controller are in radio and system ROM, providing significant savings in memory usage and more space available for applications.

The new high-speed mode allows data transfers up to 2 Mbps, twice the speed of Bluetooth 4.2 and five times the speed of Bluetooth 4.0, without increasing power consumption. In addition to faster speeds, this mode offers significant improvements for energy efficiency and wireless coexistence with reduced radio communication time.

Bluetooth 5 also enables unparalleled flexibility for adjustment of speed and range based on application needs, which capitalizes on the high-speed or long-range modes respectively. Data transfers are now possible at 2 Mbps, enabling development of applications using voice, audio, imaging, and data logging that were not previously an option using Bluetooth low energy. With high-speed mode, existing applications deliver faster responses, richer engagement, and longer battery life. Bluetooth 5 enables fast, reliable firmware updates.

6.3.2 802.15.4 (Thread, Zigbee, 6LoWPAN)

Through a dedicated IEEE radio API, the RF Core supports the 2.4-GHz IEEE 802.15.4-2011 physical layer (2 Mchips per second Offset-QPSK with DSSS 1:8), used in Thread, Zigbee, and 6LoWPAN protocols. The 802.15.4 PHY and MAC are in radio and system ROM. TI also provides royalty-free protocol stacks for Thread and Zigbee as part of the SimpleLink SDK, enabling a robust end-to-end solution.

版权 © 2018–2019, Texas Instruments Incorporated

6.4 Memory

The up to 352-KB nonvolatile (Flash) memory provides storage for code and data. The flash memory is in-system programmable and erasable. The last flash memory sector must contain a Customer Configuration section (CCFG) that is used by boot ROM and TI provided drivers to configure the device. This configuration is done through the ccfg.c source file that is included in all TI provided examples.

The ultra-low leakage system static RAM (SRAM) is split into up to five 16-KB blocks and can be used for both storage of data and execution of code. Retention of SRAM contents in Standby power mode is enabled by default and included in Standby mode power consumption numbers. Parity checking for detection of bit errors in memory is built-in, which reduces chip-level soft errors and thereby increases reliability. System SRAM is always initialized to zeroes upon code execution from boot.

To improve code execution speed and lower power when executing code from nonvolatile memory, a 4-way nonassociative 8-KB cache is enabled by default to cache and prefetch instructions read by the system CPU. The cache can be used as a general-purpose RAM by enabling this feature in the Customer Configuration Area (CCFG).

There is a 4-KB ultra-low leakage SRAM available for use with the Sensor Controller Engine which is typically used for storing Sensor Controller programs, data and configuration parameters. This RAM is also accessible by the system CPU. The Sensor Controller RAM is not cleared to zeroes between system resets.

The ROM includes a TI-RTOS kernel and low-level drivers, as well as significant parts of selected radio stacks, which frees up flash memory for the application. The ROM also contains a serial (SPI and UART) bootloader that can be used for initial programming of the device.

版权 © 2018–2019, Texas Instruments Incorporated

6.5 Sensor Controller

The Sensor Controller contains circuitry that can be selectively enabled in both Standby and Active power modes. The peripherals in this domain can be controlled by the Sensor Controller Engine, which is a proprietary power-optimized CPU. This CPU can read and monitor sensors or perform other tasks autonomously; thereby significantly reducing power consumption and offloading the system CPU.

The Sensor Controller Engine is user programmable with a simple programming language that has syntax similar to C. This programmability allows for sensor polling and other tasks to be specified as sequential algorithms rather than static configuration of complex peripheral modules, timers, DMA, register programmable state machines, or event routing.

The main advantages are:

- Flexibility - data can be read and processed in unlimited manners while still ensuring ultra-low power
- 2 MHz low-power mode enables lowest possible handling of digital sensors
- Dynamic reuse of hardware resources
- 40-bit accumulator supporting multiplication, addition and shift
- Observability and debugging options

Sensor Controller Studio is used to write, test, and debug code for the Sensor Controller. The tool produces C driver source code, which the System CPU application uses to control and exchange data with the Sensor Controller. Typical use cases may be (but are not limited to) the following:

- Read analog sensors using integrated ADC or comparators
- Interface digital sensors using GPIOs, SPI, UART, or I^2C (I^2C is bit-banged)
- Capacitive sensing
- Waveform generation
- Very low-power pulse counting (flow metering)
- Key scan

The peripherals in the Sensor Controller include the following:

- The low-power clocked comparator can be used to wake the system CPU from any state in which the comparator is active. A configurable internal reference DAC can be used in conjunction with the comparator. The output of the comparator can also be used to trigger an interrupt or the ADC.
- Capacitive sensing functionality is implemented through the use of a constant current source, a time-to-digital converter, and a comparator. The continuous time comparator in this block can also be used as a higher-accuracy alternative to the low-power clocked comparator. The Sensor Controller takes care of baseline tracking, hysteresis, filtering, and other related functions when these modules are used for capacitive sensing.
- The ADC is a 12-bit, 200-ksamples/s ADC with eight inputs and a built-in voltage reference. The ADC can be triggered by many different sources including timers, I/O pins, software, and comparators.
- The analog modules can connect to up to eight different GPIOs
- Dedicated SPI master with up to 6 MHz clock speed

The peripherals in the Sensor Controller can also be controlled from the main application processor.

版权 © 2018–2019, Texas Instruments Incorporated

6.6 Cryptography

The CC2652R device comes with a wide set of modern cryptography-related hardware accelerators, drastically reducing code footprint and execution time for cryptographic operations. It also has the benefit of being lower power and improves availability and responsiveness of the system because the cryptography operations runs in a background hardware thread.
Together with a large selection of open-source cryptography libraries provided with the Software Development Kit (SDK), this allows for secure and future proof IoT applications to be easily built on top of the platform. The hardware accelerator modules are:

- **True Random Number Generator (TRNG)** module provides a true, nondeterministic noise source for the purpose of generating keys, initialization vectors (IVs), and other random number requirements. The TRNG is built on 24 ring oscillators that create unpredictable output to feed a complex nonlinear-combinatorial circuit.
- **Secure Hash Algorithm 2 (SHA-2)** with support for SHA224, SHA256, SHA384, and SHA512
- **Advanced Encryption Standard (AES)** with 128 and 256 bit key lengths
- **Public Key Accelerator** - Hardware accelerator supporting mathematical operations needed for elliptic curves up to 512 bits and RSA key pair generation up to 1024 bits.

Through use of these modules and the TI provided cryptography drivers, the following capabilities are available for an application or stack:

- **Key Agreement Schemes**
  - Elliptic curve Diffie–Hellman with static or ephemeral keys (ECDH and ECDHE)
  - Elliptic curve Password Authenticated Key Exchange by Juggling (ECJ-PAKE)
- **Signature Generation**
  - Elliptic curve Diffie-Hellman Digital Signature Algorithm (ECDSA)
- **Curve Support**
  - Short Weierstrass form (full hardware support), such as:
    - NIST-P224, NIST-P256, NIST-P384, NIST-P521
    - Brainpool-256R1, Brainpool-384R1, Brainpool-512R1
    - secp256r1
  - Montgomery form (hardware support for multiplication), such as:
    - Curve25519
- **SHA2 based MACs**
  - HMAC with SHA224, SHA256, SHA384, or SHA512
- Block cipher mode of operation
  - AESCCM
  - AESGCM
  - AESECB
  - AESCBC
  - AESCBC-MAC
- **True random number generation**

Other capabilities, such as RSA encryption and signatures as well as Edwards type of elliptic curves such as Curve1174 or Ed25519, can also be implemented using the provided hardware accelerators but are not part of the TI SimpleLink SDK for the CC2652R device.

版权 © 2018–2019, Texas Instruments Incorporated

6.7 Timers

A large selection of timers are available as part of the CC2652R device. These timers are:

- **Real-Time Clock (RTC)**

  A 70-bit 3-channel timer running on the 32 kHz low frequency system clock (SCLK_LF) This timer is available in all power modes except Shutdown. The timer can be calibrated to compensate for frequency drift when using the LF RCOSC as the low frequency system clock. If an external LF clock with frequency different from 32.768 kHz is used, the RTC tick speed can be adjusted to compensate for this. When using TI-RTOS, the RTC is used as the base timer in the operating system and should thus only be accessed through the kernel APIs such as the Clock module. The real time clock can also be read by the Sensor Controller Engine to timestamp sensor data and also has dedicated capture channels. By default, the RTC halts when a debugger halts the device.

- **General Purpose Timers (GPTIMER)**

  The four flexible GPTIMERs can be used as either 4× 32 bit timers or 8× 16 bit timers, all running on up to 48 MHz. Each of the 16- or 32-bit timers support a wide range of features such as one-shot or periodic counting, pulse width modulation (PWM), time counting between edges and edge counting. The inputs and outputs of the timer are connected to the device event fabric, which allows the timers to interact with signals such as GPIO inputs, other timers, DMA and ADC. The GPTIMERs are available in Active and Idle power modes.

- **Sensor Controller Timers**

  The Sensor Controller contains 3 timers:

  AUX Timer 0 and 1 are 16-bit timers with a 2^N prescaler. Timers can either increment on a clock or on each edge of a selected tick source. Both one-shot and periodical timer modes are available.

  AUX Timer 2 is a 16-bit timer that can operate at 24 MHz, 2 MHz or 32 kHz independent of the Sensor Controller functionality. There are 4 capture or compare channels, which can be operated in one-shot or periodical modes. The timer can be used to generate events for the Sensor Controller Engine or the ADC, as well as for PWM output or waveform generation.

- **Radio Timer**

  A multichannel 32-bit timer running at 4 MHz is available as part of the device radio. The radio timer is typically used as the timing base in wireless network communication using the 32-bit timing word as the network time. The radio timer is synchronized with the RTC by using a dedicated radio API when the device radio is turned on or off. This ensures that for a network stack, the radio timer seems to always be running when the radio is enabled. The radio timer is in most cases used indirectly through the trigger time fields in the radio APIs and should only be used when running the accurate 48 MHz high frequency crystal is the source of SCLK_HF.

- **Watchdog timer**

  The watchdog timer is used to regain control if the system operates incorrectly due to software errors. It is typically used to generate an interrupt to and reset of the device for the case where periodic monitoring of the system components and tasks fails to verify proper functionality. The watchdog timer runs on a 1.5 MHz clock rate and cannot be stopped once enabled. The watchdog timer pauses to run in Standby power mode and when a debugger halts the device.

版权 © 2018–2019, Texas Instruments Incorporated

6.8 Serial Peripherals and I/O

The SSIs are synchronous serial interfaces that are compatible with SPI, MICROWIRE, and TI's synchronous serial interfaces. The SSIs support both SPI master and slave up to 4 MHz. The SSI modules support configurable phase and polarity.

The UARTs implement universal asynchronous receiver and transmitter functions. They support flexible baud-rate generation up to a maximum of 3 Mbps.

The I^2S interface is used to handle digital audio and can also be used to interface pulse-density modulation microphones (PDM).

The I^2C interface is also used to communicate with devices compatible with the I^2C standard. The I^2C interface can handle 100 kHz and 400 kHz operation, and can serve as both master and slave.

The I/O controller (IOC) controls the digital I/O pins and contains multiplexer circuitry to allow a set of peripherals to be assigned to I/O pins in a flexible manner. All digital I/Os are interrupt and wake-up capable, have a programmable pullup and pulldown function, and can generate an interrupt on a negative or positive edge (configurable). When configured as an output, pins can function as either push-pull or open-drain. Five GPIOs have high-drive capabilities, which are marked in **bold** in Section 4. All digital peripherals can be connected to any digital pin on the device.

For more information, see the CC13x2, CC26x2 SimpleLink™ Wireless MCU Technical Reference Manual.

6.9 Battery and Temperature Monitor

A combined temperature and battery voltage monitor is available in the CC2652R device. The battery and temperature monitor allows an application to continuously monitor on-chip temperature and supply voltage and respond to changes in environmental conditions as needed. The module contains window comparators to interrupt the system CPU when temperature or supply voltage go outside defined windows. These events can also be used to wake up the device from Standby mode through the Always-On (AON) event fabric.

6.10 µDMA

The device includes a direct memory access (µDMA) controller. The µDMA controller provides a way to offload data-transfer tasks from the system CPU, thus allowing for more efficient use of the processor and the available bus bandwidth. The µDMA controller can perform a transfer between memory and peripherals. The µDMA controller has dedicated channels for each supported on-chip module and can be programmed to automatically perform transfers between peripherals and memory when the peripheral is ready to transfer more data.

Some features of the µDMA controller include the following (this is not an exhaustive list):

- Highly flexible and configurable channel operation of up to 32 channels
- Transfer modes: memory-to-memory, memory-to-peripheral, peripheral-to-memory, and peripheral-to-peripheral
- Data sizes of 8, 16, and 32 bits
- Ping-pong mode for continuous streaming of data

6.11 Debug

The on-chip debug support is done through a dedicated cJTAG (IEEE 1149.7) or JTAG (IEEE 1149.1) interface. The device boots by default into cJTAG mode and must be reconfigured to use 4-pin JTAG.

版权 © 2018–2019, Texas Instruments Incorporated

6.12 Power Management

To minimize power consumption, the CC2652R supports a number of power modes and power management features (see 表 6-1).

表 6-1. Power Modes

MODE	SOFTWARE CONFIGURABLE POWER MODES				RESET PIN HELD
	ACTIVE	IDLE	STANDBY	SHUTDOWN	
CPU	Active	Off	Off	Off	Off
Flash	On	Available	Off	Off	Off
SRAM	On	On	Retention	Off	Off
Supply System	On	On	Duty Cycled	Off	Off
Register and CPU retention	Full	Full	Partial	No	No
SRAM retention	Full	Full	Full	No	No
48 MHz high-speed clock (SCLK_HF)	XOSC_HF or RCOSC_HF	XOSC_HF or RCOSC_HF	Off	Off	Off
2 MHz medium-speed clock (SCLK_MF)	RCOSC_MF	RCOSC_MF	Available	Off	Off
32 kHz low-speed clock (SCLK_LF)	XOSC_LF or RCOSC_LF	XOSC_LF or RCOSC_LF	XOSC_LF or RCOSC_LF	Off	Off
Peripherals	Available	Available	Off	Off	Off
Sensor Controller	Available	Available	Available	Off	Off
Wake-up on RTC	Available	Available	Available	Off	Off
Wake-up on pin edge	Available	Available	Available	Available	Off
Wake-up on reset pin	On	On	On	On	On
Brownout detector (BOD)	On	On	Duty Cycled	Off	Off
Power-on reset (POR)	On	On	On	Off	Off
Watchdog timer (WDT)	Available	Available	Paused	Off	Off

In **Active** mode, the application system CPU is actively executing code. Active mode provides normal operation of the processor and all of the peripherals that are currently enabled. The system clock can be any available clock source (see 表 6-1).

In **Idle** mode, all active peripherals can be clocked, but the Application CPU core and memory are not clocked and no code is executed. Any interrupt event brings the processor back into active mode.

In **Standby** mode, only the always-on (AON) domain is active. An external wake-up event, RTC event, or Sensor Controller event is required to bring the device back to active mode. MCU peripherals with retention do not need to be reconfigured when waking up again, and the CPU continues execution from where it went into standby mode. All GPIOs are latched in standby mode.

In **Shutdown** mode, the device is entirely turned off (including the AON domain and Sensor Controller), and the I/Os are latched with the value they had before entering shutdown mode. A change of state on any I/O pin defined as a *wake from shutdown pin* wakes up the device and functions as a reset trigger. The CPU can differentiate between reset in this way and reset-by-reset pin or power-on reset by reading the reset status register. The only state retained in this mode is the latched I/O state and the flash memory contents.

版权 © 2018–2019, Texas Instruments Incorporated

The Sensor Controller is an autonomous processor that can control the peripherals in the Sensor Controller independently of the system CPU. This means that the system CPU does not have to wake up, for example to perform an ADC sampling or poll a digital sensor over SPI, thus saving both current and wake-up time that would otherwise be wasted. The Sensor Controller Studio tool enables the user to program the Sensor Controller, control its peripherals, and wake up the system CPU as needed. All Sensor Controller peripherals can also be controlled by the system CPU.

注

The power, RF and clock management for the CC2652R device require specific configuration and handling by software for optimized performance. This configuration and handling is implemented in the TI-provided drivers that are part of the CC2652R software development kit (SDK). Therefore, TI highly recommends using this software framework for all application development on the device. The complete SDK with TI-RTOS (optional), device drivers, and examples are offered free of charge in source code.

6.13 Clock Systems

The CC2652R device has several internal system clocks.

The 48 MHz SCLK_HF is used as the main system (MCU and peripherals) clock. This can be driven by the internal 48 MHz RC Oscillator (RCOSC_HF) or an external 48 MHz crystal (XOSC_HF). Radio operation requires an external 48 MHz crystal.

SCLK_MF is an internal 2 MHz clock that is used by the Sensor Controller in low-power mode and also for internal power management circuitry. The SCLK_MF clock is always driven by the internal 2 MHz RC Oscillator (RCOSC_MF).

SCLK_LF is the 32.768 kHz internal low-frequency system clock. It can be used by the Sensor Controller for ultra-low-power operation and is also used for the RTC and to synchronize the radio timer before or after Standby power mode. SCLK_LF can be driven by the internal 32.8 kHz RC Oscillator (RCOSC_LF), a 32.768 kHz watch-type crystal, or a clock input on any digital IO.

When using a crystal or the internal RC oscillator, the device can output the 32 kHz SCLK_LF signal to other devices, thereby reducing the overall system cost.

6.14 Network Processor

Depending on the product configuration, the CC2652R device can function as a wireless network processor (WNP - a device running the wireless protocol stack with the application running on a separate host MCU), or as a system-on-chip (SoC) with the application and protocol stack running on the system CPU inside the device.

In the first case, the external host MCU communicates with the device using SPI or UART. In the second case, the application must be written according to the application framework supplied with the wireless protocol stack.

版权 © 2018–2019, Texas Instruments Incorporated

7 Application, Implementation, and Layout

注

Information in the following Applications section is not part of the TI component specification, and TI does not warrant its accuracy or completeness. TI's customers are responsible for determining suitability of components for their purposes. Customers should validate and test their design implementation to confirm system functionality.

For general design guidelines and hardware configuration guidelines, refer to CC13xx/CC26xx Hardware Configuration and PCB Design Considerations Application Report.

7.1 Reference Designs

The following reference designs should be followed closely when implementing designs using the CC2652R device.

Special attention must be paid to RF component placement, decoupling capacitors and DCDC regulator components, as well as ground connections for all of these.

CC26x2REM-7ID Design Files

The CC26x2REM-7ID reference design provides schematic, layout and production files for the characterization board used for deriving the performance number found in this document.

LAUNCHXL-CC26X2R1 Design Files

The CC26X2R LaunchPad Design Files contain detailed schematics and layouts to build application specific boards using the CC2652R device. This design applies to both the CC2642R and CC2652R devices.

Sub-1 GHz and 2.4 GHz Antenna Kit for LaunchPad™ Development Kit and SensorTag

The antenna kit allows real-life testing to identify the optimal antenna for your application. The antenna kit includes 16 antennas for frequencies from 169 MHz to 2.4 GHz, including:

- PCB antennas
- Helical antennas
- Chip antennas
- Dual band antennas for 868 and 915 MHz combined with 2.4 GHz

The antenna kit includes a JSC cable to connect to the Wireless MCU LaunchPad Development Kits and SensorTags.

版权 © 2018–2019, Texas Instruments Incorporated

8 器件和文档支持

TI 提供大量的开发工具。下面列出了用于评估器件性能、生成代码和开发解决方案的工具和软件。

8.1 工具和软件

CC2652R 器件受多种软件和硬件开发工具的支持。

开发套件

CC26x2 LaunchPad™ 开发套件

CC26x2R LaunchPad™开发套件可支持 开发 需要低功耗运行的低于 1GHz 高性能无线应用。该套件 采用 CC2652R SimpleLink 无线 MCU，便于您快速评估 2.4GHz 无线应用和构建原型， 例如低功耗蓝牙 5、Zigbee 和 Thread，以及它们的各种组合。该套件可与 LaunchPad 生态系统一起使用，轻松实现更多功能，例如传感器、显示器等等。内置 EnergyTrace™软件是基于电能的代码分析工具，用于测量和显示应用的电能系统配置并帮助优化应用以实现超低功耗。请参阅Table 3-1，获取关于如何针对单协议产品选择合适器件的指导。

软件

SimpleLink™ CC13X2-CC26X2 SDK

SimpleLink CC13X2-CC26X2 软件开发套件 (SDK) 提供了完整软件包，可用于在 CC13X2/CC26X2 系列器件上开发无线 应用 。该 SDK 内含用于 CC2652R 器件的综合软件包，包括以下协议栈：

- 低功耗蓝牙 4 和 5
- Thread（基于 OpenThread）
- Zigbee 3.0
- TI 15.4-Stack - 面向低于 1GHz 和 2.4GHz 的基于 IEEE 802.15.4 的星形拓扑网络解决方案
- EasyLink - 大量的构建模块，用于构建专有的射频软件栈
- 多协议支持 - 使用动态多协议管理器 (DMM) 在多个堆栈之间同时运行

SimpleLink CC13X2-CC26X2 SDK 是 TI 的 SimpleLink MCU 平台的一部分，可提供单一开发环境，为客户开发有线和无线应用提供灵活的硬件、软件和 工具选项。有关 SimpleLink MCU 平台的详细信息，请访问 www.ti.com.cn/simplelink。

版权 © 2018–2019, Texas Instruments Incorporated

开发工具

Code Composer Studio™ 集成开发环境 (IDE)

Code Composer Studio 是一种集成开发环境 (IDE)，支持 TI 的微控制器和嵌入式处理器产品系列。Code Composer Studio 包含一整套用于开发和调试嵌入式应用 的工具的工具。它包含了优化的 C/C++ 编译器、源代码编辑器、项目构建环境、调试器、描述器以及其他多种 功能。直观的 IDE 提供了单个用户界面，有助于完成应用程序开发流程的每个步骤。熟悉的工具和界面使用户能够比以前更快地入手。Code Composer Studio 将 Eclipse®软件框架的优点和 TI 先进的嵌入式调试功能相结合，为嵌入式开发人员提供了一种功能丰富的优异开发环境。

CCS 不仅支持所有 SimpleLink 无线 MCU，还支持 EnergyTrace™ 软件（应用电量使用评测）。SimpleLink SDK 中提供用于 TI-RTOS 的实时对象查看器插件。

Code Composer Studio 与 LaunchPad 开发套件上包括的 XDS 调试器一起使用时免费提供。

Code Composer Studio™ Cloud IDE

Code Composer Studio (CCS) Cloud 是基于 Web 的 IDE，它使您能够创建、编辑和构建 CCS 及 Energia™ 项目。成功构建项目后，您可以在互联 LaunchPad 上下载并运行该项目。CCS Cloud 现在支持 基本调试， 包括设置断点和查看变量值等功能。

用于 Arm® 的 IAR Embedded Workbench®

IAR Embedded Workbench®是使用汇编器 C 和 C++ 构建 和调试嵌入式系统应用的一套开发工具。它提供完全集成的开发环境，包括项目管理器、编辑器和构建工具。IAR 支持所有 SimpleLink 无线 MCU。它支持许多调试器，包括 XDS110、IAR I-jet™和 Segger J-Link™。SimpleLink SDK 中提供用于 TI-RTOS 的实时对象查看器插件。SimpleLink SDK 中提供的大部分软件示例都对 IAR 提供现成的支持。

通过 iar.com 可获取 30 天评估版本或 32KB 大小限制版本。

SmartRF™ Studio

SmartRF™ Studio 是一个 Windows®应用程序，可用于评估和配置德州仪器 (TI) 的 SimpleLink 无线 MCU。该应用将帮助射频系统的设计人员在设计过程的早期阶段轻松评估无线电。它对生成配置寄存器值、实际测试和调试射频系统尤为有用。SmartRF Studio 可作为单独的应用使用，也可与射频器件的适用评估板或调试探针一起使用。SmartRF Studio 的 特性包括：

- 链路测试 - 在节点之间发送和接收数据包
- 天线和辐射测试 - 将无线电设置为连续波 TX 和 RX 状态
- 导出无线电配置代码，以便与 TI SimpleLink SDK 射频驱动器一起使用
- 用于外部开关信令和控制的自定义 GPIO 配置

Sensor Controller Studio

Sensor Controller Studio 用于编写、测试和调试传感器控制器外设代码。该工具生成传感器控制器接口驱动程序，这是编译到系统 CPU 应用的一组 C 源文件。这些源文件还包含传感器控制器二进制映像，并允许系统 CPU 应用控制数据并与传感器控制器交换数据。Sensor Controller Studio 的特性包括：

- 即时可用的多个常见用例的示例
- 用于在类似 C 语言的编程语言中进行编程的具有内置编译器和汇编器的全工具链
- 使用集成的传感器控制器任务测试和调试功能来进行快速开发，包括传感器数据视觉化和算法验证。

版权 © 2018–2019, Texas Instruments Incorporated

CCS UniFlash

CCS UniFlash 是一个独立的工具，可用于在 TI MCU 上对片上闪存进行编程。UniFlash 具有 GUI、命令行和脚本接口。CCS UniFlash 免费提供。

8.1.1 SimpleLink™ 微控制器平台

SimpleLink 微控制器平台在单一软件开发环境中提供种类繁多的有线和无线 Arm® MCU（片上系统）产品系列，为开发人员设定了新标准。为您的物联网应用提供灵活的硬件、软件和工具 选项。只需投资购买一次 SimpleLink 软件开发套件，即可在您的整个产品系列中进行使用。访问 ti.com.cn/simplelink，了解更多信息。

8.2 文档支持

如需接收关于数据表、勘误表、应用手册和类似文档的文档更新通知，请导航至位于 ti.com.cn/product/cn/CC2652R 的器件产品文件夹。单击右上角的*通知我* 进行注册，即可每周接收产品信息更改摘要。有关更改的详细信息，请查看任何已修订文档中包含的修订历史记录。

下面列出了介绍 MCU、相关外设以及其他配套技术资料的最新文档。

TI Resource Explorer

TI Resource Explorer

提供与您的器件和开发板有关的软件示例、库、可执行文件和文档。

勘误表

CC2652R 器件勘误表

器件勘误表说明了针对这款器件的所有器件版本功能规格的已知例外情况，并 说明 了如何识别器件版本。

应用报告

关于 CC2652R 器件的所有应用报告，请访问 ti.com.cn/product/cn/CC2652R/technicaldocuments 查看器件产品文件夹。

技术参考手册 **(TRM)**

CC13x2、CC26x2 SimpleLink™ 无线 MCU TRM

TRM 详细 介绍了 器件系列提供的所有模块和外设。

版权 © 2018–2019, Texas Instruments Incorporated

8.3 Community Resources

The following links connect to TI community resources. Linked contents are provided "AS IS" by the respective contributors. They do not constitute TI specifications and do not necessarily reflect TI's views; see TI's Terms of Use.

TI E2E™ Online Community The TI engineer-to-engineer (E2E) community was created to foster collaboration among engineers. At e2e.ti.com, you can ask questions, share knowledge, explore ideas and help solve problems with fellow engineers.

TI Embedded Processors Wiki Established to help developers get started with Embedded Processors from Texas Instruments and to foster innovation and growth of general knowledge about the hardware and software surrounding these devices.

8.4 商标

SmartRF, SimpleLink, LaunchPad, EnergyTrace, Code Composer Studio, E2E are trademarks of Texas Instruments.
Arm, Cortex, Arm Thumb are registered trademarks of Arm Limited (or its subsidiaries).
蓝牙 is a registered trademark of Bluetooth SIG Inc.
Eclipse is a registered trademark of Eclipse Foundation.
CoreMark is a registered trademark of Embedded Microprocessor Benchmark Consortium.
I-jet is a trademark of IAR Systems AB.
IAR Embedded Workbench is a registered trademark of IAR Systems AB.
Windows is a registered trademark of Microsoft Corporation.
J-Link is a trademark of SEGGER Microcontroller Systeme GmbH.
Wi-Fi is a registered trademark of Wi-Fi Alliance.
Wi-SUN is a registered trademark of Wi-SUN Alliance Inc.
Zigbee is a registered trademark of Zigbee Alliance Inc.
All other trademarks are the property of their respective owners.

8.5 静电放电警告



ESD 可能会损坏该集成电路。德州仪器 (TI) 建议通过适当的预防措施处理所有集成电路。如果不遵守正确的处理措施和安装程序，可能会损坏集成电路。

ESD 的损坏小至导致微小的性能降级，大至整个器件故障。 精密的集成电路可能更容易受到损坏，这是因为非常细微的参数更改都可能会导致器件与其发布的规格不相符。

8.6 Glossary

TI Glossary This glossary lists and explains terms, acronyms, and definitions.

9 机械、封装和可订购信息

9.1 封装信息

以下页面包含机械、封装和可订购信息。这些信息是指定器件的最新可用数据。数据如有变更，恕不另行通知，且不会对此文档进行修订。如需获取此数据表的浏览器版本，请查阅左侧的导航栏。

PACKAGING INFORMATION

Orderable Device	Status (1)	Package Type	Package Drawing	Pins	Package Qty	Eco Plan (2)	Lead finish/ Ball material (6)	MSL Peak Temp (3)	Op Temp (°C)	Device Marking (4/5)	Samples
CC2652R1FRGZR	ACTIVE	VQFN	RGZ	48	2500	RoHS & Green	NIPDAU | NIPDAUAG	Level-3-260C-168 HR	-40 to 105	CC2652 R1F	Samples
CC2652R1FRGZT	ACTIVE	VQFN	RGZ	48	250	RoHS & Green	NIPDAU | NIPDAUAG	Level-3-260C-168 HR	-40 to 105	CC2652 R1F	Samples

(1) The marketing status values are defined as follows:
ACTIVE: Product device recommended for new designs.
LIFEBUY: TI has announced that the device will be discontinued, and a lifetime-buy period is in effect.
NRND: Not recommended for new designs. Device is in production to support existing customers, but TI does not recommend using this part in a new design.
PREVIEW: Device has been announced but is not in production. Samples may or may not be available.
OBSOLETE: TI has discontinued the production of the device.

(2) **RoHS:** TI defines "RoHS" to mean semiconductor products that are compliant with the current EU RoHS requirements for all 10 RoHS substances, including the requirement that RoHS substance do not exceed 0.1% by weight in homogeneous materials. Where designed to be soldered at high temperatures, "RoHS" products are suitable for use in specified lead-free processes. TI may reference these types of products as "Pb-Free".
RoHS Exempt: TI defines "RoHS Exempt" to mean products that contain lead but are compliant with EU RoHS pursuant to a specific EU RoHS exemption.
Green: TI defines "Green" to mean the content of Chlorine (Cl) and Bromine (Br) based flame retardants meet JS709B low halogen requirements of <=1000ppm threshold. Antimony trioxide based flame retardants must also meet the <=1000ppm threshold requirement.

(3) MSL, Peak Temp. - The Moisture Sensitivity Level rating according to the JEDEC industry standard classifications, and peak solder temperature.

(4) There may be additional marking, which relates to the logo, the lot trace code information, or the environmental category on the device.

(5) Multiple Device Markings will be inside parentheses. Only one Device Marking contained in parentheses and separated by a "~" will appear on a device. If a line is indented then it is a continuation of the previous line and the two combined represent the entire Device Marking for that device.

(6) Lead finish/Ball material - Orderable Devices may have multiple material finish options. Finish options are separated by a vertical ruled line. Lead finish/Ball material values may wrap to two lines if the finish value exceeds the maximum column width.

Important Information and Disclaimer: The information provided on this page represents TI's knowledge and belief as of the date that it is provided. TI bases its knowledge and belief on information provided by third parties, and makes no representation or warranty as to the accuracy of such information. Efforts are underway to better integrate information from third parties. TI has taken and continues to take reasonable steps to provide representative and accurate information but may not have conducted destructive testing or chemical analysis on incoming materials and chemicals. TI and TI suppliers consider certain information to be proprietary, and thus CAS numbers and other limited information may not be available for release.

In no event shall TI's liability arising out of such information exceed the total purchase price of the TI part(s) at issue in this document sold by TI to Customer on an annual basis.

TAPE AND REEL INFORMATION

REEL DIMENSIONS

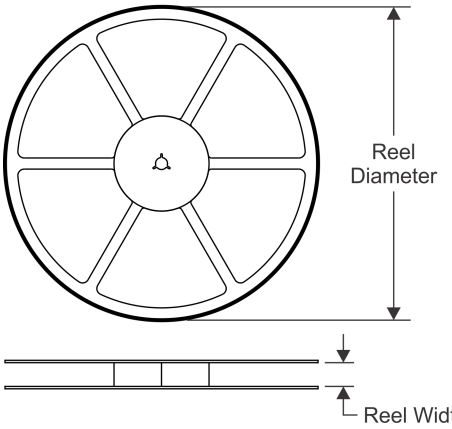

TAPE DIMENSIONS

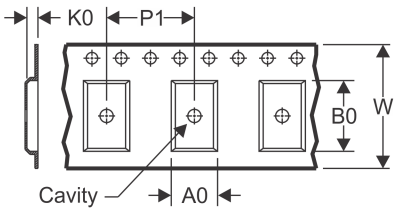

A0	Dimension designed to accommodate the component width
B0	Dimension designed to accommodate the component length
K0	Dimension designed to accommodate the component thickness
W	Overall width of the carrier tape
P1	Pitch between successive cavity centers

QUADRANT ASSIGNMENTS FOR PIN 1 ORIENTATION IN TAPE

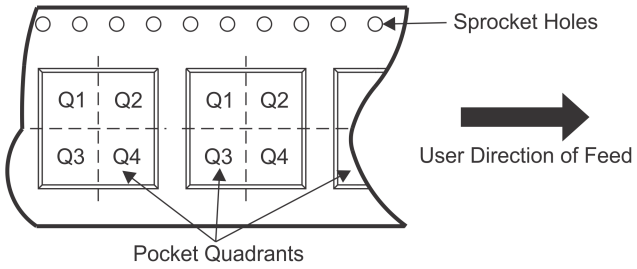

*All dimensions are nominal

Device	Package Type	Package Drawing	Pins	SPQ	Reel Diameter (mm)	Reel Width W1 (mm)	A0 (mm)	B0 (mm)	K0 (mm)	P1 (mm)	W (mm)	Pin1 Quadrant
CC2652R1FRGZR	VQFN	RGZ	48	2500	330.0	16.4	7.3	7.3	1.1	12.0	16.0	Q2
CC2652R1FRGZT	VQFN	RGZ	48	250	180.0	16.4	7.3	7.3	1.1	12.0	16.0	Q2

TAPE AND REEL BOX DIMENSIONS

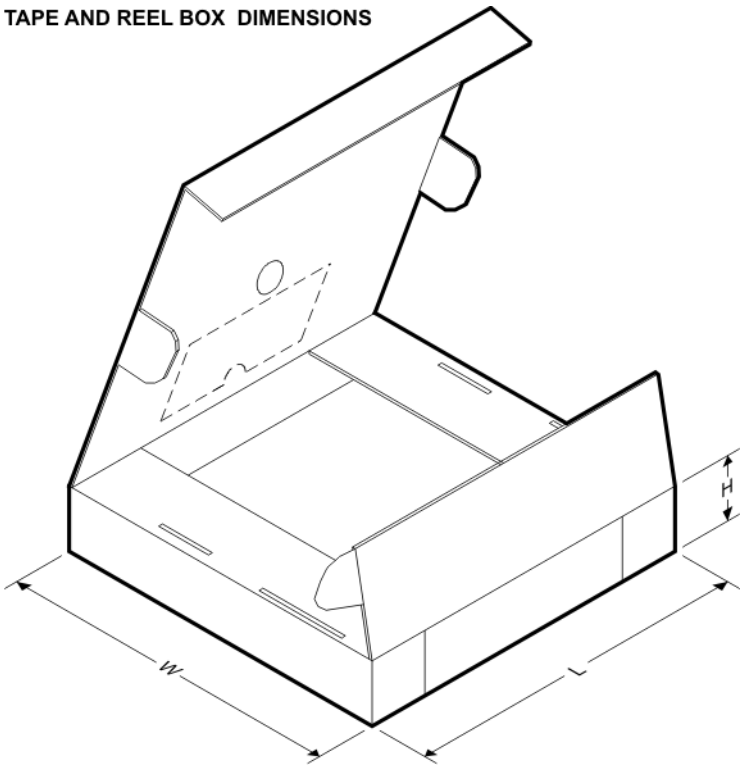

*All dimensions are nominal

Device	Package Type	Package Drawing	Pins	SPQ	Length (mm)	Width (mm)	Height (mm)
CC2652R1FRGZR	VQFN	RGZ	48	2500	367.0	367.0	35.0
CC2652R1FRGZT	VQFN	RGZ	48	250	210.0	185.0	35.0

GENERIC PACKAGE VIEW

RGZ 48

VQFN - 1 mm max height

7 x 7, 0.5 mm pitch

PLASTIC QUADFLAT PACK- NO LEAD

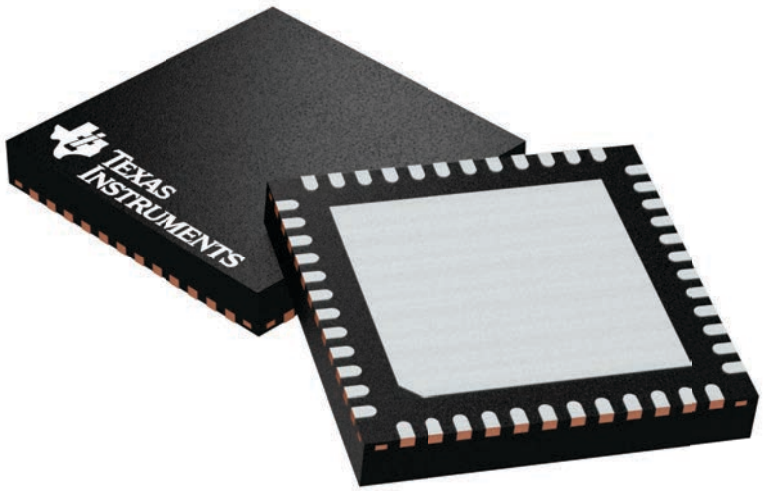

Images above are just a representation of the package family, actual package may vary.
Refer to the product data sheet for package details.

4224671/A

PLASTIC QUADFLAT PACK- NO LEAD

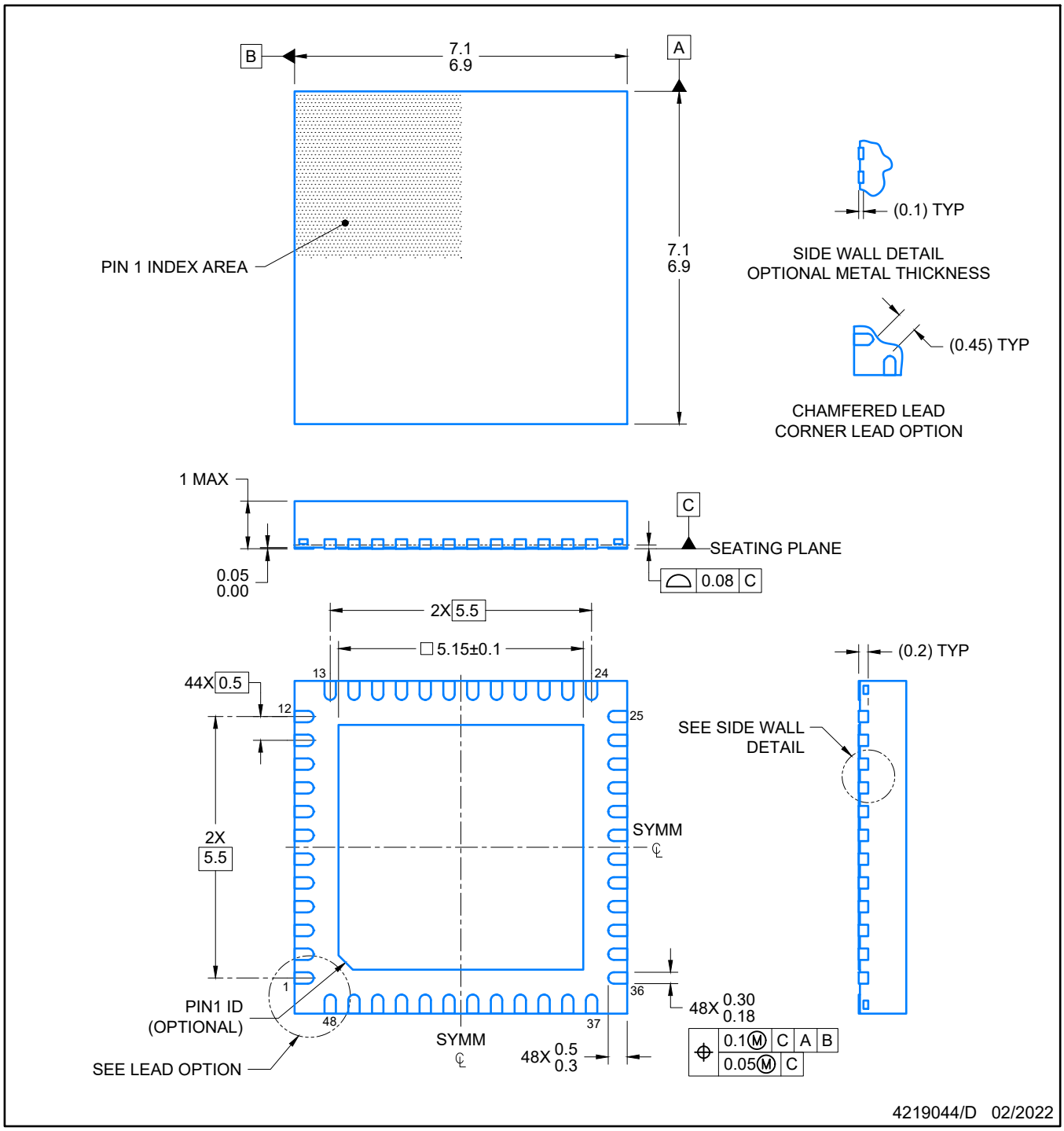

NOTES:

1. All linear dimensions are in millimeters. Any dimensions in parenthesis are for reference only. Dimensioning and tolerancing per ASME Y14.5M.
2. This drawing is subject to change without notice.
3. The package thermal pad must be soldered to the printed circuit board for optimal thermal and mechanical performance.

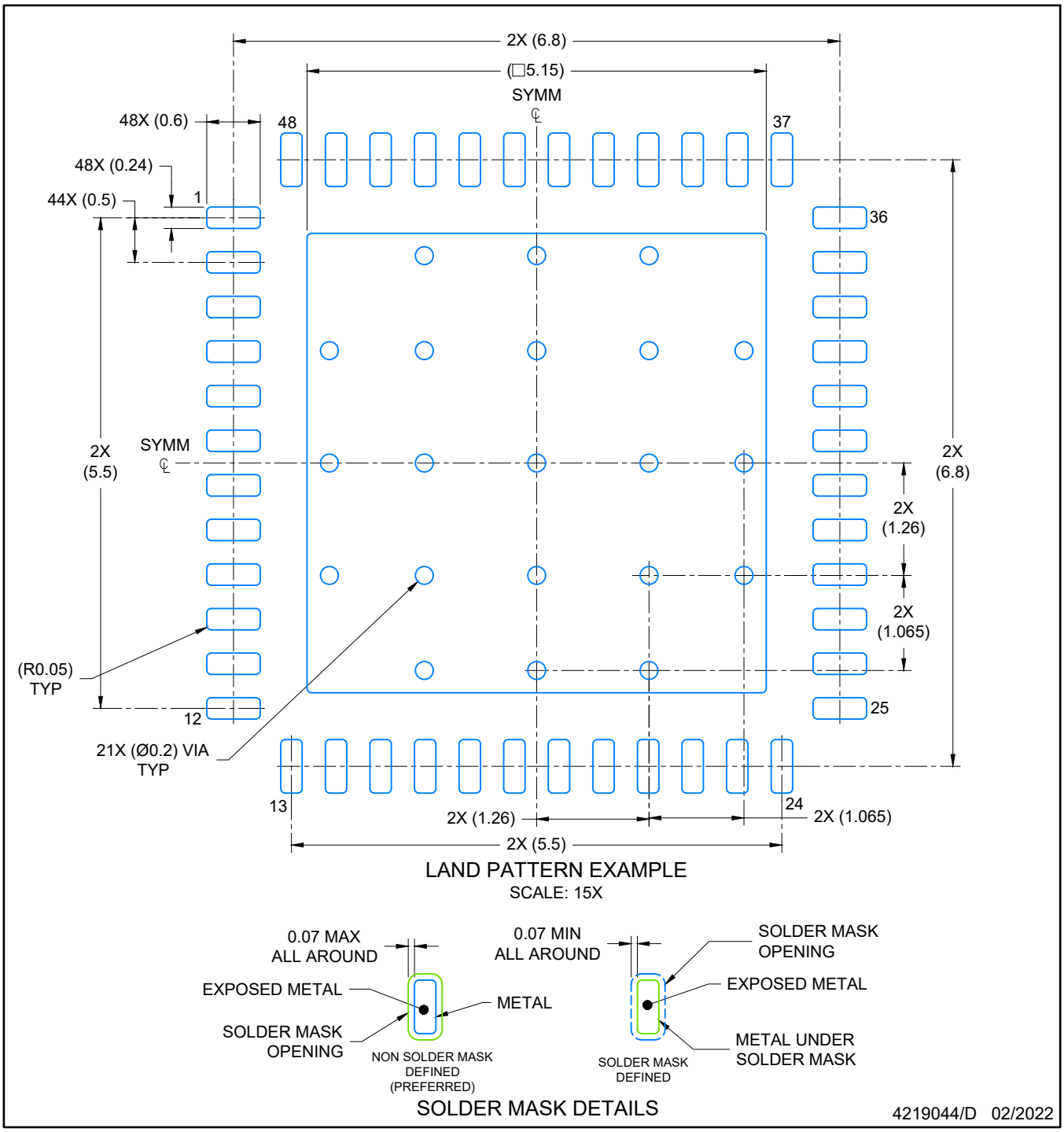

NOTES: (continued)

4. This package is designed to be soldered to a thermal pad on the board. For more information, see Texas Instruments literature number SLUA271 (www.ti.com/lit/slua271).
5. Vias are optional depending on application, refer to device data sheet. If any vias are implemented, refer to their locations shown on this view. It is recommended that vias under paste be filled, plugged or tented.

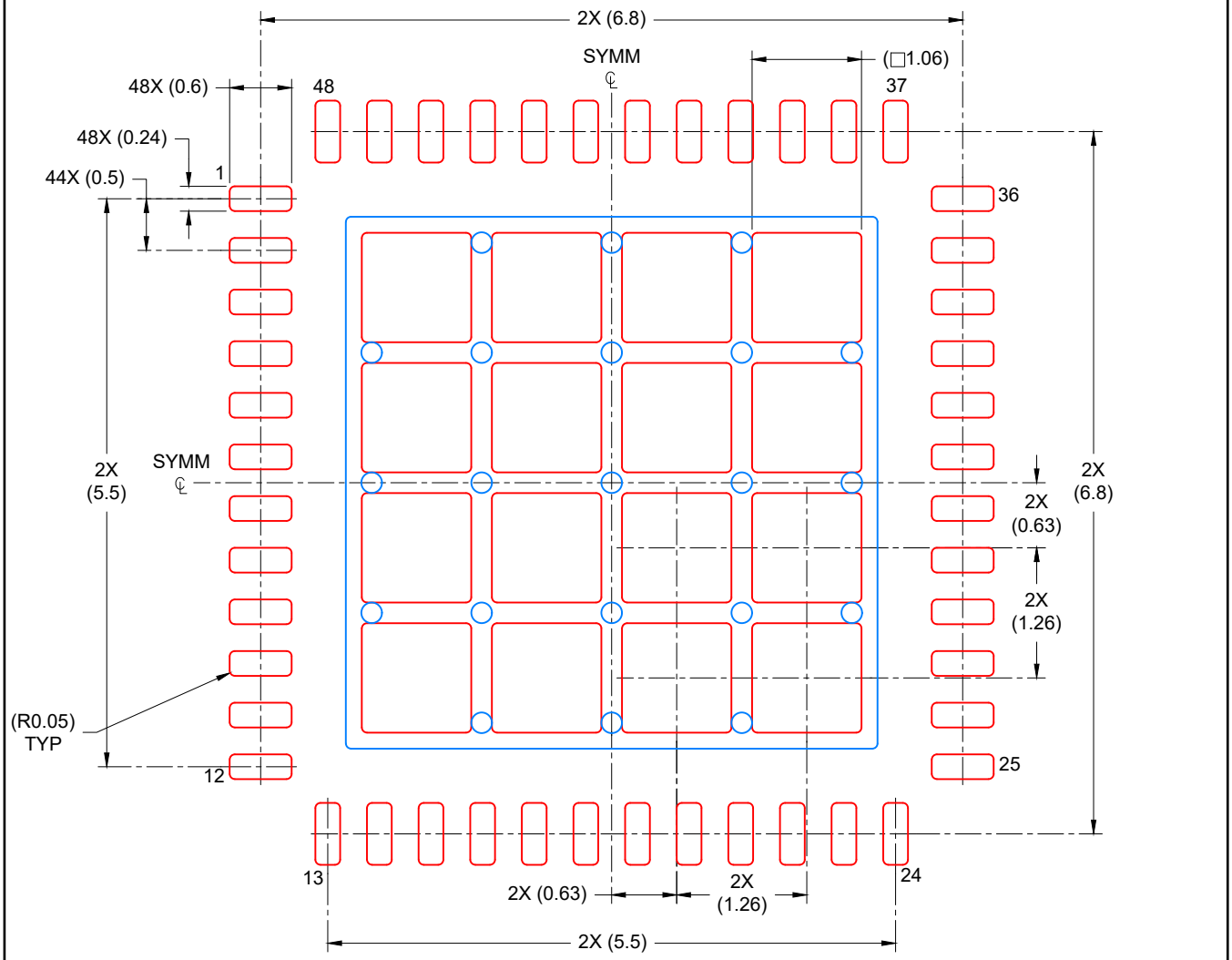

SOLDER PASTE EXAMPLE
BASED ON 0.125 mm THICK STENCIL

EXPOSED PAD
67% PRINTED COVERAGE BY AREA
SCALE: 15X

4219044/D 02/2022

NOTES: (continued)

6. Laser cutting apertures with trapezoidal walls and rounded corners may offer better paste release. IPC-7525 may have alternate design recommendations.

重要声明和免责声明

TI“按原样”提供技术和可靠性数据（包括数据表）、设计资源（包括参考设计）、应用或其他设计建议、网络工具、安全信息和其他资源，不保证没有瑕疵且不做出任何明示或暗示的担保，包括但不限于对适销性、某特定用途方面的适用性或不侵犯任何第三方知识产权的暗示担保。

这些资源可供使用 TI 产品进行设计的熟练开发人员使用。您将自行承担以下全部责任：(1) 针对您的应用选择合适的 TI 产品，(2) 设计、验证并测试您的应用，(3) 确保您的应用满足相应标准以及任何其他功能安全、信息安全、监管或其他要求。

这些资源如有变更，恕不另行通知。TI 授权您仅可将这些资源用于研发本资源所述的 TI 产品的应用。严禁对这些资源进行其他复制或展示。您无权使用任何其他 TI 知识产权或任何第三方知识产权。您应全额赔偿因在这些资源的使用中对 TI 及其代表造成的任何索赔、损害、成本、损失和债务，TI 对此概不负责。

TI 提供的产品受 TI 的销售条款或 ti.com 上其他适用条款/TI 产品随附的其他适用条款的约束。TI 提供这些资源并不会扩展或以其他方式更改 TI 针对 TI 产品发布的适用的担保或担保免责声明。

TI 反对并拒绝您可能提出的任何其他或不同的条款。

邮寄地址：Texas Instruments, Post Office Box 655303, Dallas, Texas 75265
Copyright © 2022，德州仪器 (TI) 公司