INA21x-Q1 汽车级电压输出、低侧或高侧测量、双向、零漂移系列电流分流监视器

1 特性

- 符合面向汽车应用的 AEC-Q100 标准：
  - 温度等级 1：–40°C 至 +125°C，T_A
- 提供功能安全
  - 可帮助进行功能安全系统设计的文档
- 宽共模范围：–0.3V 至 26V
- 失调电压：±100µV（最大值）（支持 10mV 满标度分流压降）
- 精度：
  - 增益误差：
    - ±1%（整个温度范围内的最大值，A、B 版本）
    - ±0.5%（C 版本）
  - 温漂：0.5µV/°C（最大值）
  - 增益漂移：10ppm/°C（最大值）
- 增益选择：
  - INA210-Q1：200V/V
  - INA211-Q1：500V/V
  - INA212-Q1：1000V/V
  - INA213-Q1：50V/V
  - INA214-Q1：100V/V
  - INA215-Q1：75V/V
- 静态电流：100µA（最大值）
- 封装：6 引脚 SC70

2 应用

- 车身控制模块
- 阀门控制
- 电机控制
- 电子稳定控制
- 无线充电发送器

3 说明

INA21x-Q1 系列器件是电压输出、电流分流监控器（也称为电流感应放大器），可在独立于电源电压的 –0.3V 至 26V 范围内的共模电压中感应分流器上的压降。提供了五种固定增益：50V/V、75V/V、100V/V、200V/V、500V/V 和 1000V/V。该系列器件通常用于过流检测、电压反馈控制环路或用作功率监控器。零漂移架构的低偏移使得该器件能够在分流器上的最大压降低至 10mV（满量程）的情况下进行电流感应。

这些器件由 2.7V 至 26V 的单个电源供电，消耗的最大电源电流为 100µA。这些器件具有 –40°C 至 +125°C 的工作温度范围，并且采用 6 引脚 SC70 封装。

目前提供的内容中

器件信息(1)

器件型号	封装	封装尺寸（标称值）
INA210-Q1	SC70 (6)	2.00mm × 1.25mm
INA211-Q1	SC70 (6)	2.00mm × 1.25mm
INA212-Q1	SC70 (6)	2.00mm × 1.25mm
INA213-Q1	SC70 (6)	2.00mm × 1.25mm
INA214-Q1	SC70 (6)	2.00mm × 1.25mm
INA215-Q1	SC70 (6)	2.00mm × 1.25mm

(1) 如需了解所有可用封装，请参阅产品说明书末尾的封装选项附录。

简化原理图

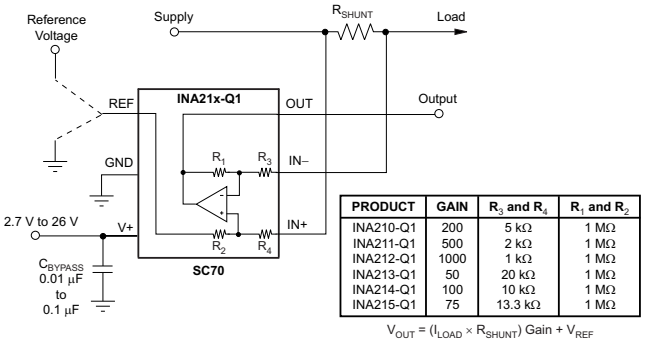

PRODUCT	GAIN	R_3 and R_4	R_1 and R_2
INA210-Q1	200	5 kΩ	1 MΩ
INA211-Q1	500	2 kΩ	1 MΩ
INA212-Q1	1000	1 kΩ	1 MΩ
INA213-Q1	50	20 kΩ	1 MΩ
INA214-Q1	100	10 kΩ	1 MΩ
INA215-Q1	75	13.3 kΩ	1 MΩ

$V_{OUT} = (I_{LOAD} \times R_{SHUNT})$ Gain + V_{REF}

Copyright © 2017, Texas Instruments Incorporated

本文档旨在为方便起见，提供有关 TI 产品中文版本的信息，以确认产品的概要。 有关适用的官方英文版本的最新信息，请访问 www.ti.com，其内容始终优先。 TI 不保证翻译的准确性和有效性。 在实际设计之前，请务必参考最新版本的英文版本。

目录

1 特性 ... 1
2 应用 ... 1
3 说明 ... 1
4 修订历史记录 ... 2
5 **Pin Configuration and Functions** ... 5
6 **Specifications** ... 6
6.1 Absolute Maximum Ratings ... 6
6.2 ESD Ratings ... 6
6.3 Recommended Operating Conditions ... 6
6.4 Thermal Information ... 7
6.5 Electrical Characteristics ... 7
6.6 Typical Characteristics ... 9
7 **Detailed Description** ... 13
7.1 Overview ... 13
7.2 Functional Block Diagram ... 13
7.3 Feature Description ... 14
7.4 Device Functional Modes ... 15
8 **Application and Implementation** ... 21
8.1 Application Information ... 21
8.2 Typical Applications ... 21
9 **Power Supply Recommendations** ... 24
10 **Layout** ... 24
10.1 Layout Guidelines ... 24
10.2 Layout Example ... 24
11 器件和文档支持 ... 25
11.1 文档支持 ... 25
11.2 相关链接 ... 25
11.3 接收文档更新通知 ... 25
11.4 社区资源 ... 25
11.5 商标 ... 25
11.6 静电放电警告 ... 25
11.7 Glossary ... 25
12 机械、封装和可订购信息 ... 25

4 修订历史记录

注：之前版本的页码可能与当前版本有所不同。

Changes from Revision I (August 2019) to Revision J — **Page**

- 添加了“提供功能安全”信息 ... 1

Changes from Revision H (September 2017) to Revision I — **Page**

- Changed V_S and V_{IN} maximum values from 26 V to 28 V in *Absolute Maximum Ratings* table ... 6
- Changed differential V_{IN} minimum value from –26 V to –28 V in *Absolute Maximum Ratings* table ... 6
- Added new Note 3 with caution regarding operation between 26 V and 28 V ... 6

Changes from Revision G (May 2016) to Revision H — **Page**

- Deleted *Device Options* table ... 5
- Added V_{DIF} to analog input parameter in *Absolute Maximum Ratings* table ... 6
- Added V_S table note in *Absolute Maximum Ratings* table ... 6
- Changed formatting of *Thermal Information* table note ... 7
- Deleted first table note in *Electrical Characteristics* table ... 7
- Added version C to input test conditions in *Electrical Characteristics* table ... 7
- Added version C test conditions to gain error parameter in *Electrical Characteristics* table ... 8
- 已更改 图 7, 图 10 , 图 15, 图 17, 图 18, 图 19, 图 20 , 图 21 and 图 22 to match commercial data sheet ... 9
- 已添加 test conditions to 图 8, 图 9, 图 10, and 图 11 and 图 12 from INA21x commercial data sheet ... 9
- 已更改 x-axis unit in 图 17 from "ms" to "µs" ... 10

Changes from Revision F (April 2016) to Revision G — **Page**

- INA210-Q1、INA211-Q1 和 INA215-Q1 已投入生产 ... 1
- 删除了*器件信息* 表中的第二个脚注 ... 1

版权 © 2009–2020, Texas Instruments Incorporated

Changes from Revision E (December 2014) to Revision F **Page**

- 更改了*增益选择* “特性” 项目符号：添加了 INA210-Q1、INA211-Q1 和 INA215-Q1 子项目符号，删除了 INA213-Q1 中的 A 1
- 更改了*器件信息* 表：添加了 INA210-Q1、INA211-Q1、INA215-Q1 行，删除了 INA213A-Q1 中的 A，将封装术语从 SOT 更改为 SC70 1
- 更改了第一个 “特性” 项目符号 1
- 更改了 “说明” 部分的第一段 1
- 更改了简化原理图：更改了数字表 1
- Deleted footnote 1 from *Pin Functions* table 5
- Changed *Absolute Maximum Ratings* operating temperature from –55°C to 150°C to –40°C to 125°C 6
- Changed Changed *ESD Ratings* table: changed title, made CDM values all one row because corner pins and all other pins tested the same, added separation of specs for versions A and B, and moved the storage temperature to *Absolute Maximum Ratings* table; added version B devices 6
- Changed *Electrical Characteristics* table: changed conditions and changed all INA213A-Q1 to INA213-Q1 7
- Changed Input, V_{CM} parameter in *Electrical Characteristics* table 7
- Changed Input, *CMRR* and V_{OS} parameters in *Electrical Characteristics* table 7
- Changed Output, *Gain* parameter in *Electrical Characteristics* table 8
- Deleted test conditions from Output, *Nonlinearity error* parameter in *Electrical Characteristics* table 8
- Changed Frequency Response, *BW* parameter in *Electrical Characteristics* table 8
- Changed conditions of *Typical Characteristics* section 9
- Changed Figure 7 9
- Changed Figure 15 10
- Changed first sentence of *Overview* section 13
- Changed first sentence of *Basic Connections* section 14
- Changed last paragraph of *Selecting* R_S section 14
- Changed Table 1 and Table 2 16
- Changed Figure 25 17
- Changed *Improving Transient Robustness* section: changed first paragraph, added caution and last paragraph 20

Changes from Revision D (October 2013) to Revision E **Page**

- Added *Handling Rating* table, *Feature Description* section, *Device Functional Modes*, *Application and Implementation* section, *Power Supply Recommendations* section, *Layout* section, *Device and Documentation Support* section, and *Mechanical, Packaging, and Orderable Information* section 6
- Deleted θ_{JA} thermal resistance parameter from *Electrical Characteristics* 8

Changes from Revision C (August 2013) to Revision D **Page**

- 已更改 将整个文档中的 INA213-Q1 器件更改为 INA213A-Q1 器件 1
- Deleted T_A, Operating Temperature from *ABSOLUTE MAXIMUM RATINGS* table 6

Changes from Revision B (June 2010) to Revision C **Page**

- 将整个文档中的器件名更改为 -Q1 1
- 向 “特性”中添加了“INA212-Q1：1000V/V” 1
- 将 “应用” 项目符号均更改为特定于汽车的内容 1
- 向 “说明”添加了“INA212-Q1 提供固定增益 1000V/V” 1
- 在图像中添加了 INA212-Q1。 1
- Deleted Ordering Information table 6
- Changed HBM to 2000 V, removed MM. 6
- Changed T_A to -40 to 125°C. 6
- Added INA212-Q1 values to CMRR V_{OS} and Gain in Electrical Characteristics table. 7
- Changed Bandwidth parameter in the *ELECTRICAL CHARACTERISTICS* to differentiate between devices 8
- 已更改 *GAIN vs FREQUENCY* graph to show difference between devices 9
- Added INA212-Q1 device name in App Information. 14
- Added INA212-Q1 to image. 17

Copyright © 2009–2020, Texas Instruments Incorporated

5 Pin Configuration and Functions

DCK Package
6-Pin SC70
Top View

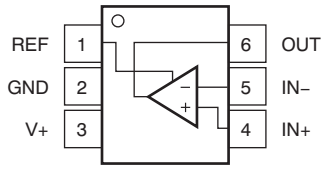

Pin Functions

PIN		I/O	DESCRIPTION
NAME	NO.		
GND	2	—	Ground
IN–	5	I	Connect to load side of shunt resistor.
IN+	4	I	Connect to supply side of shunt resistor
OUT	6	O	Output voltage
REF	1	I	Reference voltage, 0 V to V+
V+	3	—	Power supply, 2.7 V to 26 V

Copyright © 2009–2020, Texas Instruments Incorporated

6 Specifications

6.1 Absolute Maximum Ratings

over operating free-air temperature range (unless otherwise noted)[1]

		MIN	MAX	UNIT
Supply voltage, V_S[2][3]			28	V
Analog inputs, V_{IN+} , V_{IN-}[3][4]	Differential: $V_{DIF} = (V_{IN+}) - (V_{IN-})$	–28	28	V
	Common-mode (Version A)	GND – 0.3	28	
	Common-mode (Versions B and C)	GND – 0.1	28	V
REF input		GND – 0.3	(V_S) + 0.3	V
Output[5]		GND – 0.3	(V_S) + 0.3	V
Input current into any pin[5]			5	mA
Operating temperature		–40	125	°C
Junction temperature			150	°C
Storage temperature, T_{stg}		–65	150	°C

(1) Stresses beyond those listed under *Absolute Maximum Ratings* may cause permanent damage to the device. These are stress ratings only, which do not imply functional operation of the device at these or any other conditions beyond those indicated under *Recommended Operating Conditions*. Exposure to absolute-maximum-rated conditions for extended periods may affect device reliability.
(2) V_S refers to the voltage at the V+ pin.
(3) Sustained operation between 26 V and 28 V for more than a few minutes may cause permanent damage to the device.
(4) V_{IN+} and V_{IN-} are the voltages at the IN+ and IN– pins, respectively.
(5) Input voltage at any pin can exceed the voltage shown if the current at that pin is limited to 5 mA.

6.2 ESD Ratings

			VALUE	UNIT
INA21x-Q1 (VERSION A)				
$V_{(ESD)}$	Electrostatic discharge	Human body model (HBM), per AEC Q100-002[1] HBM ESD classification level 2	±2000	V
		Charged device model (CDM), per AEC Q100-011 CDM ESD classification level C6	±1000	
INA21x-Q1 (VERSIONS B AND C)				
$V_{(ESD)}$	Electrostatic discharge	Human body model (HBM), per AEC Q100-002[1] HBM ESD classification level 2	±3500	V
		Charged device model (CDM), per AEC Q100-011 CDM ESD classification level C6	±1000	

(1) AEC Q100-002 indicates HBM stressing is done in accordance with the ANSI/ESDA/JEDEC JS-001 specification.

6.3 Recommended Operating Conditions

over operating free-air temperature range (unless otherwise noted)

		MIN	NOM	MAX	UNIT
V_{CM}	Common-mode input voltage		12		V
V_S	Supply voltage	2.7		26	V
T_J	Junction temperature	–40		125	°C

Copyright © 2009–2020, Texas Instruments Incorporated

6.4 Thermal Information

THERMAL METRIC[1]		INA21x-Q1 DCK (SC70) 6 PINS	UNIT
$R_{\theta JA}$	Junction-to-ambient thermal resistance	227.3	°C/W
$R_{\theta JC(top)}$	Junction-to-case (top) thermal resistance	79.5	°C/W
$R_{\theta JB}$	Junction-to-board thermal resistance	72.1	°C/W
ψ_{JT}	Junction-to-top characterization parameter	3.6	°C/W
ψ_{JB}	Junction-to-board characterization parameter	70.4	°C/W

(1) For more information about traditional and new thermal metrics, see the *Semiconductor and IC Package Thermal Metrics* application report.

6.5 Electrical Characteristics

at T_A = 25°C and V_{SENSE} = V_{IN+} – $V_{IN–}$.
INA210-Q1, INA213-Q1, INA214-Q1, and INA215-Q1: V_S = 5 V, V_{IN+} = 12 V, and V_{REF} = V_S / 2, (unless otherwise noted)
INA211-Q1 and INA212-Q1: V_S = 12 V, V_{IN+} = 12 V, and V_{REF} = V_S / 2, (unless otherwise noted)

PARAMETER		TEST CONDITIONS		MIN	TYP	MAX	UNIT
INPUT							
V_{CM}	Common-mode input	Version A T_A = –40°C to 125°C		–0.3		26	V
		Versions B and C T_A = –40°C to 125°C		–0.1		26	
CMRR	Common-mode rejection ratio	V_{IN+} = 0 V to 26 V V_{SENSE} = 0 mV T_A = –40°C to 125°C	INA210-Q1 INA211-Q1 INA212-Q1 INA214-Q1 INA215-Q1	105	140		dB
			INA213-Q1	100	120		
V_{OS}	Offset voltage, RTI[1]	V_{SENSE} = 0 mV T_A = 25°C	INA210-Q1 INA211-Q1 INA212-Q1		±0.55	±35	µV
			INA213-Q1		±5	±100	
			INA214-Q1 INA215-Q1		±1	±60	
dV_{OS}/dT	Offset voltage vs temperature[2]	T_A = –40°C to 125°C			0.1	0.5	µV/°C
PSR	Offset voltage vs power supply	V_S = 2.7 V to 18 V V_{IN+} = 18 V V_{SENSE} = 0 mV T_A = 25°C			±0.1	±10	µV/V
I_B	Input bias current	V_{SENSE} = 0 mV T_A = 25°C		15	28	35	µA
I_{OS}	Input offset current	V_{SENSE} = 0 mV T_A = 25°C			±0.02		µA

(1) RTI = referred to input.
(2) Not production tested.

Copyright © 2009–2020, Texas Instruments Incorporated

Electrical Characteristics (continued)

at T_A = 25°C and V_{SENSE} = V_{IN+} – $V_{IN–}$.
INA210-Q1, INA213-Q1, INA214-Q1, and INA215-Q1: V_S = 5 V, V_{IN+} = 12 V, and V_{REF} = V_S / 2, (unless otherwise noted)
INA211-Q1 and INA212-Q1: V_S = 12 V, V_{IN+} = 12 V, and V_{REF} = V_S / 2, (unless otherwise noted)

PARAMETER		TEST CONDITIONS		MIN	TYP	MAX	UNIT
OUTPUT							
	Gain	INA210-Q1			200		V/V
		INA211-Q1			500		
		INA212-Q1			1000		
		INA213-Q1			50		
		INA214-Q1			100		
		INA215-Q1			75		
	Gain error	V_{SENSE} = –5 mV to 5 mV (Versions A and B) T_A = –40°C to 125°C			±0.02%	±1%	
		V_{SENSE} = –5 mV to 5 mV (Version C) T_A = –40°C to 125°C			±0.02%	±0.5%	
	Gain error vs temperature(2)	T_A = –40°C to 125°C			3	10	ppm/°C
	Nonlinearity error	T_A = 25°C			±0.01%		
	Maximum capacitive load	No sustained oscillation T_A = 25°C			1		nF
VOLTAGE OUTPUT							
	Output voltage swing to V+ power-supply rail(3)	R_L = 10 kΩ to GND T_A = –40°C to 125°C			(V+) – 0.05	(V+) – 0.2	V
	Output voltage swing to GND	T_A = –40°C to 125°C			(V_{GND}) + 0.005	(V_{GND}) + 0.05	V
FREQUENCY RESPONSE							
BW	Bandwidth	C_{LOAD} = 10 pF INA210-Q1	T_A = 25°C		14		kHz
		C_{LOAD} = 10 pF INA211-Q1			7		
		C_{LOAD} = 10 pF INA212-Q1			4		
		C_{LOAD} = 10 pF INA213-Q1			80		
		C_{LOAD} = 10 pF INA214-Q1			30		
		C_{LOAD} = 10 pF INA215-Q1			40		
SR	Slew rate	T_A = 25°C			0.4		V/µs
NOISE, RTI							
	Voltage noise density	RTI(1) T_A = 25°C			25		nV/√Hz
POWER SUPPLY							
I_Q	Quiescent current	V_{SENSE} = 0 mV	T_A = 25°C		65	100	µA
			T_A = –40°C to 125°C			115	

(3) See 图 10 in the *Typical Characteristics* section.

版权 © 2009–2020, Texas Instruments Incorporated

6.6 Typical Characteristics

at T_A = 25°C, V_S = 5 V, V_{IN+} = 12 V, and V_{REF} = V_S / 2, (unless otherwise noted)

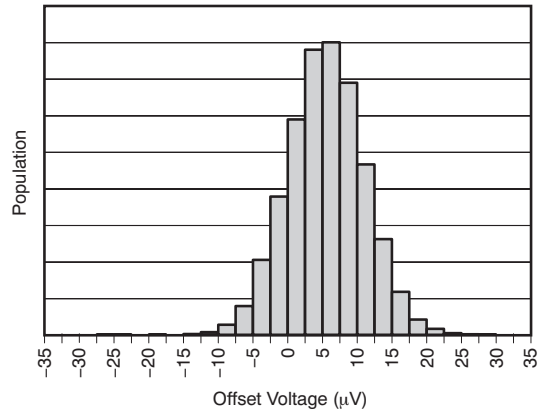

图 1. Input Offset Voltage Production Distribution

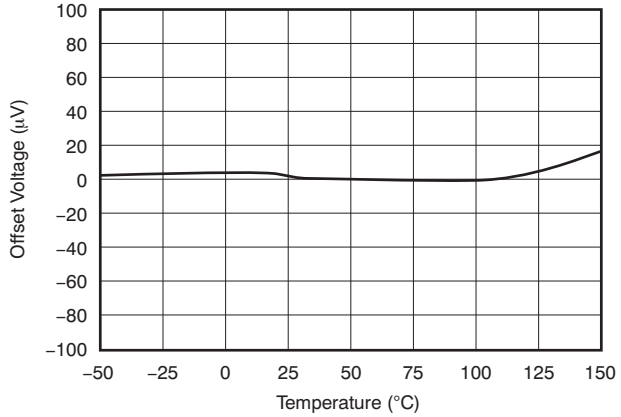

图 2. Offset Voltage vs Temperature

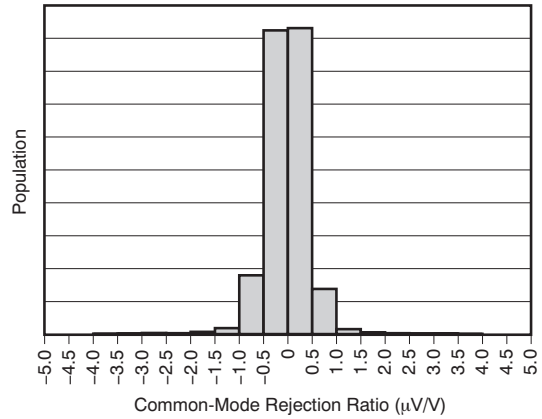

图 3. Common-Mode Rejection Production Distribution

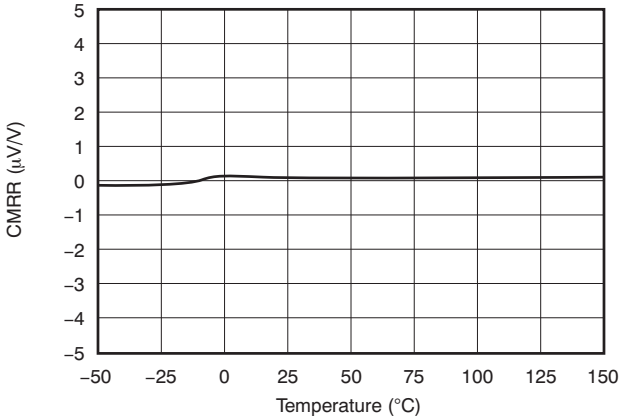

图 4. Common-Mode Rejection Ratio vs Temperature

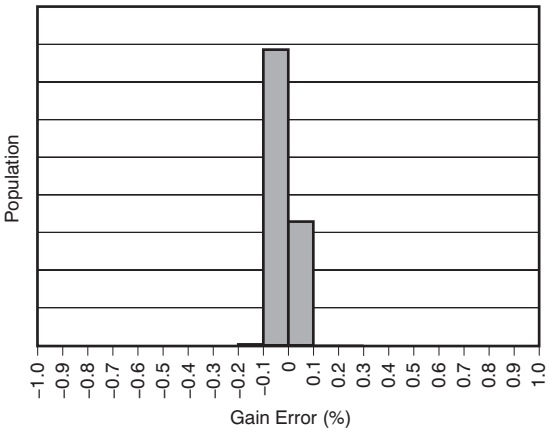

图 5. Gain Error Production Distribution

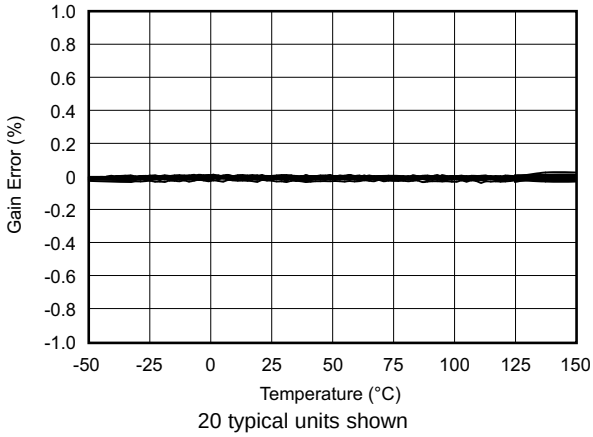

图 6. Gain Error vs Temperature

Typical Characteristics (接下页)

at T_A = 25°C, V_S = 5 V, V_{IN+} = 12 V, and V_{REF} = V_S / 2, (unless otherwise noted)

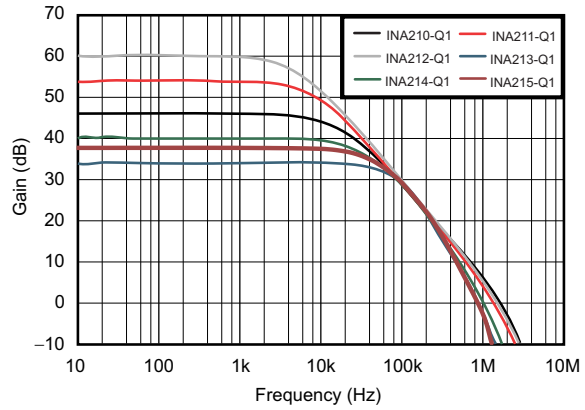

V_{CM} = 0 V V_{DIF} = 15-mV_{PP} sine

图 7. Gain vs Frequency

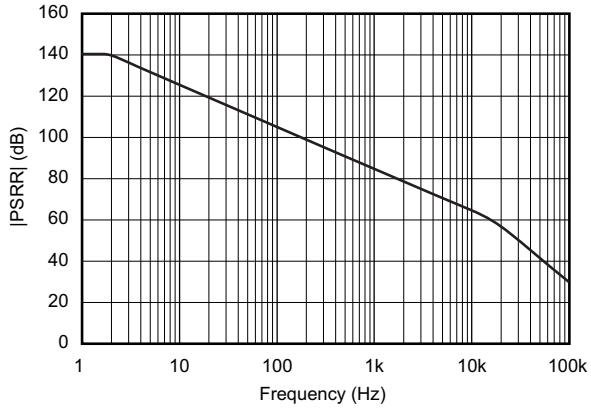

V_S = 5 V + 250-mV sine disturbance

V_{CM} = 0 V V_{REF} = 2.5 V V_{DIF} = shorted

图 8. Power-Supply Rejection Ratio vs Frequency

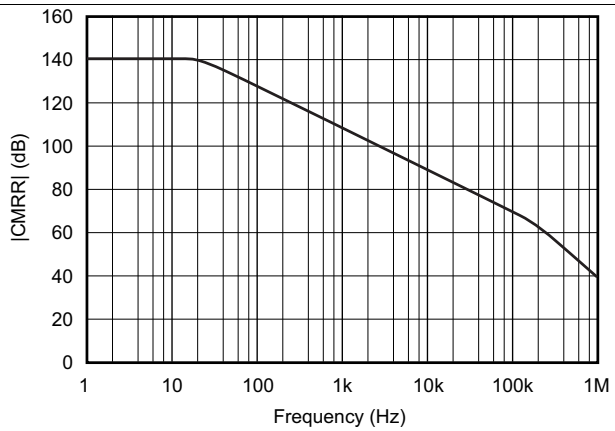

V_S = 5 V V_{CM} = 1 V sine V_{DIF} = shorted

V_{REF} = 2.5 V

图 9. Common-Mode Rejection Ratio vs Frequency

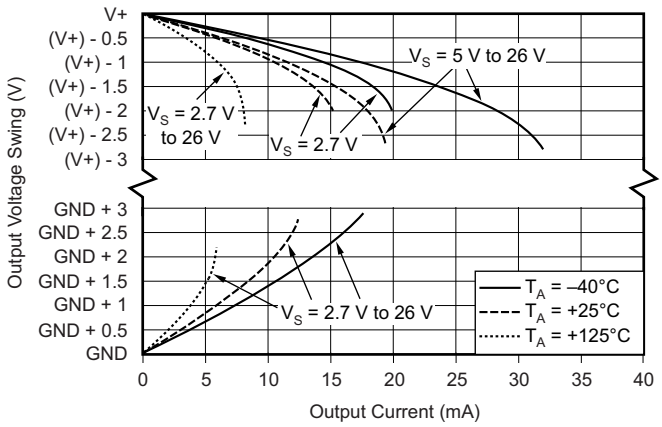

图 10. Output Voltage Swing vs Output Current

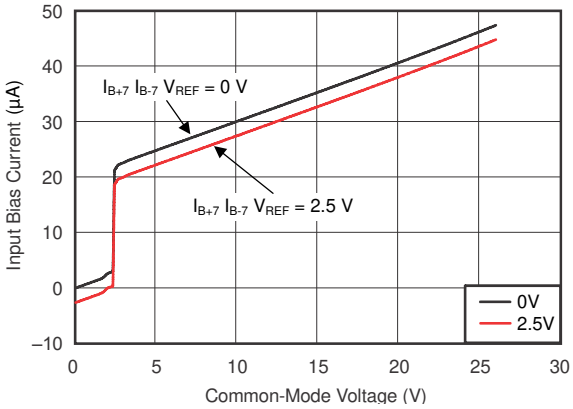

图 11. Input Bias Current vs Common-Mode Voltage With Supply Voltage = 5 V

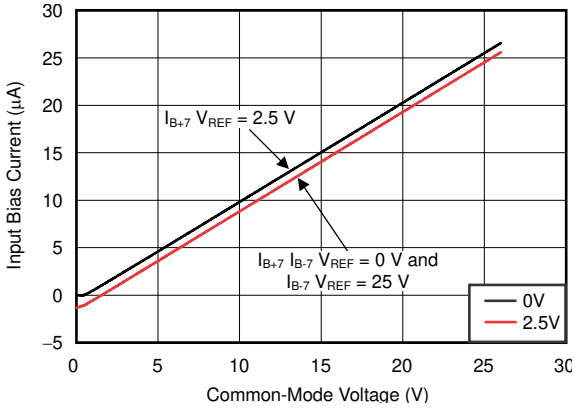

图 12. Input Bias Current vs Common-Mode Voltage With Supply Voltage = 0 V (Shutdown)

版权 © 2009–2020, Texas Instruments Incorporated

Typical Characteristics (接下页)

at T_A = 25°C, V_S = 5 V, V_{IN+} = 12 V, and V_{REF} = V_S / 2, (unless otherwise noted)

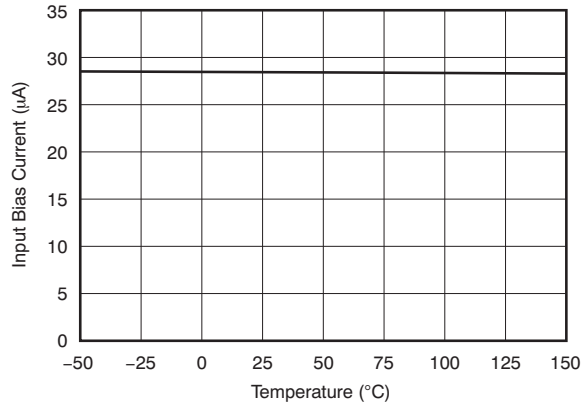

图 13. Input Bias Current vs Temperature

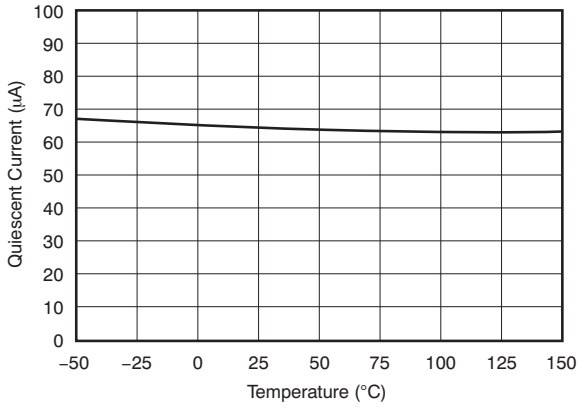

图 14. Quiescent Current vs Temperature

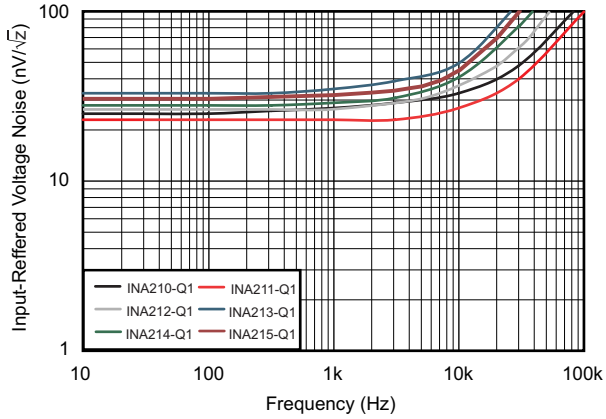

V_S = ±2.5 V V_{REF} = 0 V $V_{IN–}$, V_{IN+} = 0 V

图 15. Input-Referred Voltage Noise vs Frequency

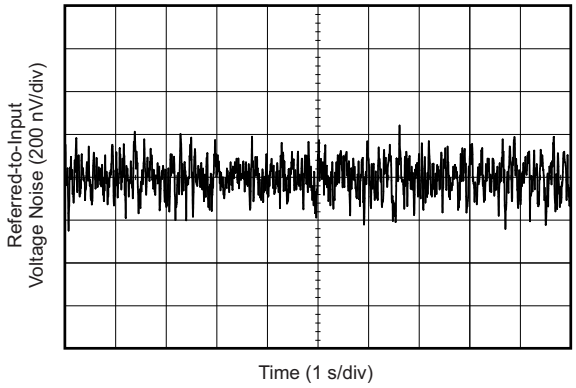

V_S = ±2.5 V V_{REF} = 0 V V_{CM} = 0 V
V_{DIF} = 0 V

图 16. 0.1-Hz To 10-Hz Voltage Noise (Referred-To-Input)

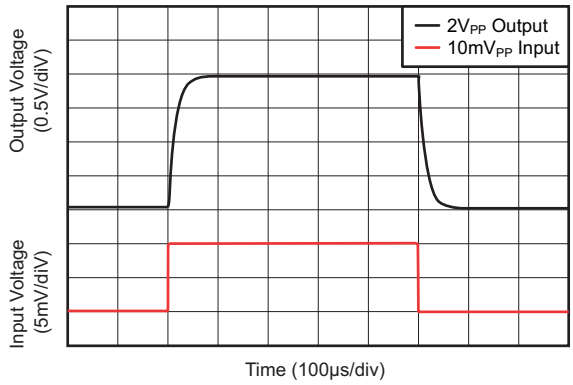

图 17. Step Response (10-mV$_{PP}$ Input Step)

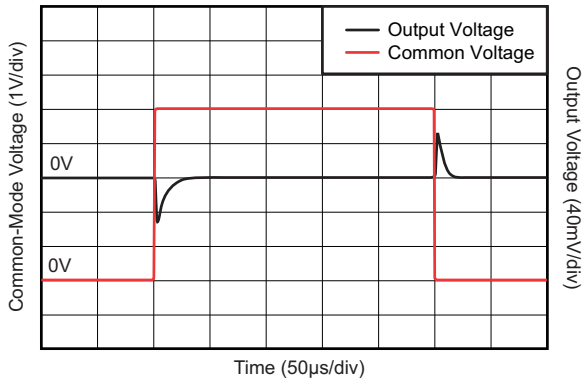

图 18. Common-Mode Voltage Transient Response

Typical Characteristics (接下页)

at T_A = 25°C, V_S = 5 V, V_{IN+} = 12 V, and V_{REF} = V_S / 2, (unless otherwise noted)

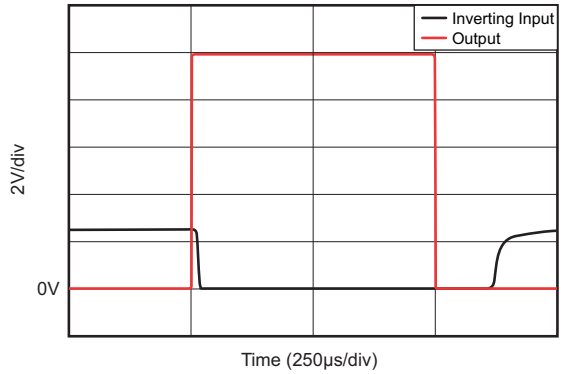

V_S = 5 V V_{REF} = 2.5 V V_{CM} = 12 V

图 19. Inverting Differential Input Overload

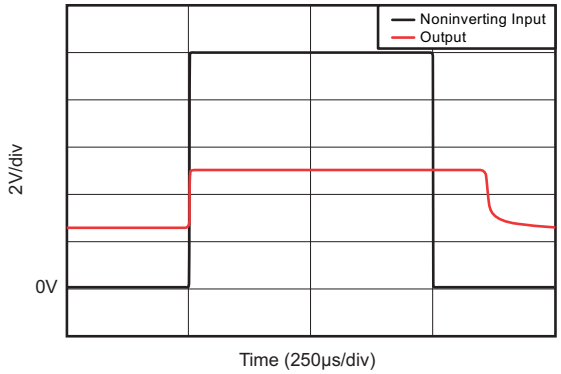

V_S = 5 V V_{REF} = 2.5 V V_{CM} = 12 V

图 20. Noninverting Differential Input Overload

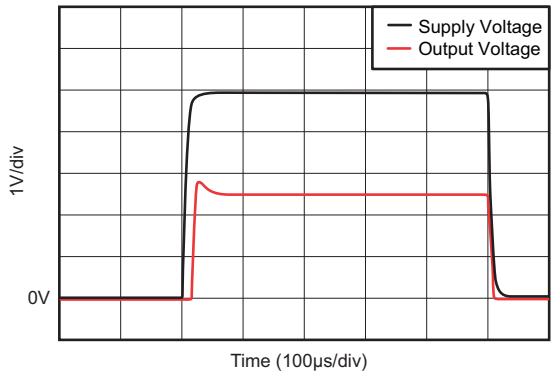

V_S = 5 V V_{REF} = 2.5 V 1-kHz step with V_{DIF} = 0 V

图 21. Start-Up Response

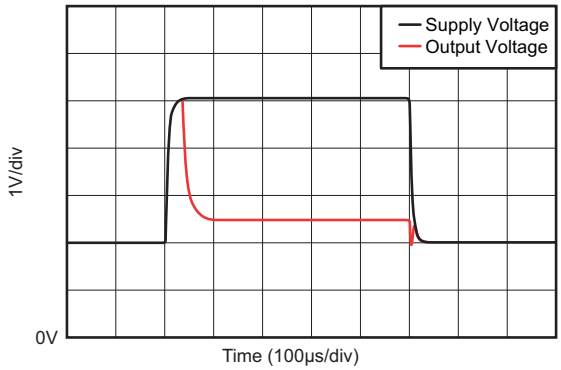

V_S = 5 V V_{REF} = 2.5 V 1-kHz step with V_{DIF} = 0 V

图 22. Brownout Recovery

版权 © 2009–2020, Texas Instruments Incorporated

7 Detailed Description

7.1 Overview

The INA210-Q1 to INA215-Q1 are 26-V, common-mode, zero-drift topology, current-sensing amplifiers that can be used in both low-side and high-side configurations. These specially-designed, current-sensing amplifiers are able to accurately measure voltages developed across current-sensing resistors on common-mode voltages that far exceed the supply voltage powering the device. Current can be measured on input voltage rails as high as 26 V and the device can be powered from supply voltages as low as 2.7 V.

The zero-drift topology enables high-precision measurements with maximum input offset voltages as low as 35 µV with a maximum temperature contribution of 0.5 µV/°C over the full temperature range of –40°C to 125°C.

7.2 Functional Block Diagram

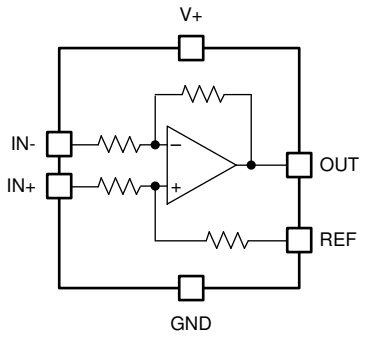

Copyright © 2017, Texas Instruments Incorporated

7.3 Feature Description

7.3.1 Basic Connections

图 23 shows the basic connections of the INA210-Q1 to INA215-Q1. Connect the input pins (IN+ and IN–) as closely as possible to the shunt resistor to minimize any resistance in series with the shunt resistor.

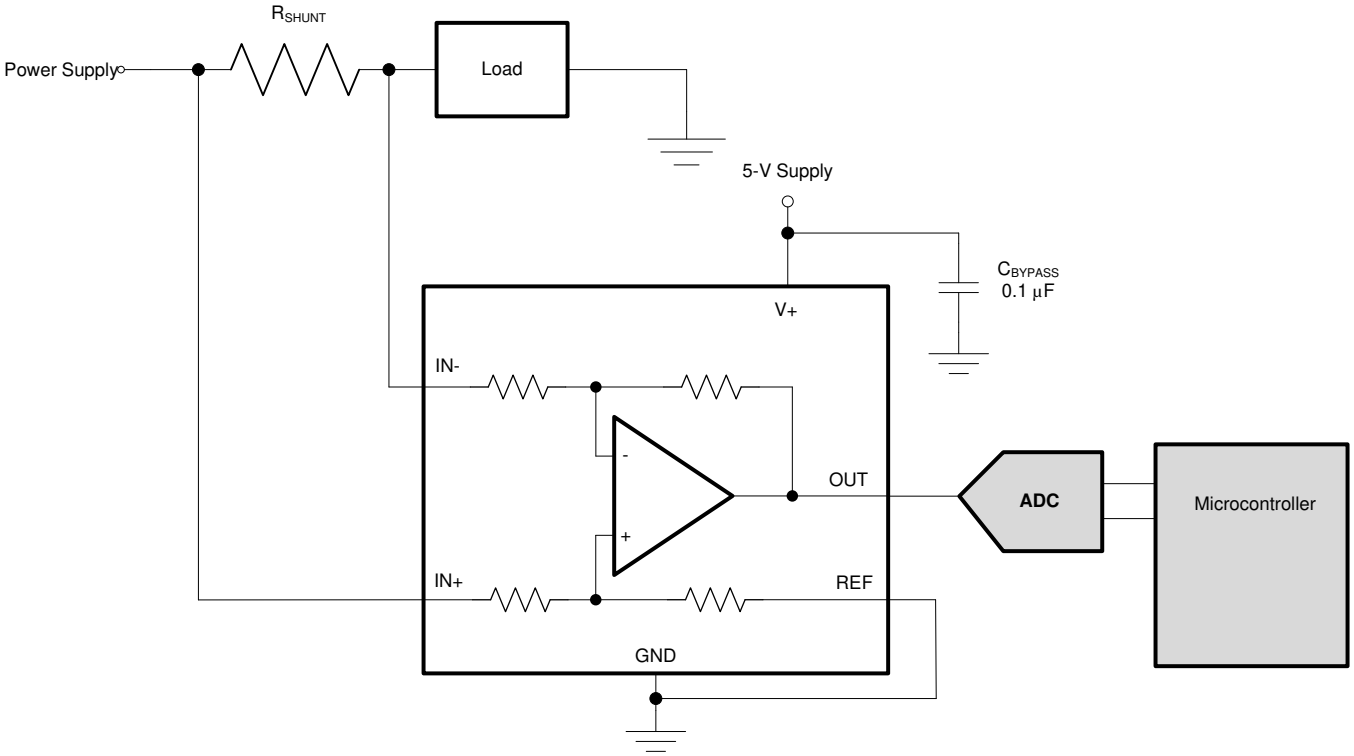

Copyright © 2017, Texas Instruments Incorporated

图 23. Typical Application

Power-supply bypass capacitors are required for stability. Applications with noisy or high-impedance power supplies can require additional decoupling capacitors to reject power-supply noise. Connect bypass capacitors close to the device pins.

7.3.2 Selecting R_S

The zero-drift offset performance of the INA21x-Q1 family of devices offers several benefits. In general, the primary advantage of the low offset characteristic enables lower full-scale drops across the shunt. For example, non-zero-drift current-shunt monitors typically require a full-scale range of 100 mV.

The INA21x-Q1 family of devices provides equivalent accuracy at a full-scale range on the order of 10 mV. This accuracy reduces shunt dissipation by an order of magnitude with many additional benefits.

Alternatively, some applications must measure current over a wide dynamic range and can take advantage of the low offset on the low end of the measurement. Most often, these applications can use the lower-gain INA213-Q1, INA214-Q1, or INA215-Q1 to accommodate larger shunt drops on the upper end of the scale. For instance, an INA213-Q1 device operating on a 3.3-V supply can easily support a full-scale shunt drop of 60 mV, with only 100 µV of offset.

版权 © 2009–2020, Texas Instruments Incorporated

7.4 Device Functional Modes

7.4.1 Input Filtering

An obvious and straightforward location for filtering is at the output of the INA21x-Q1 family of devices. However, this location negates the advantage of the low output impedance of the internal buffer. The only other filtering option is at the input pins of the INA21x-Q1 family of devices. This location, however, requires consideration of the ±30% tolerance of the internal resistances. 图 24 shows a filter placed at the input pins.

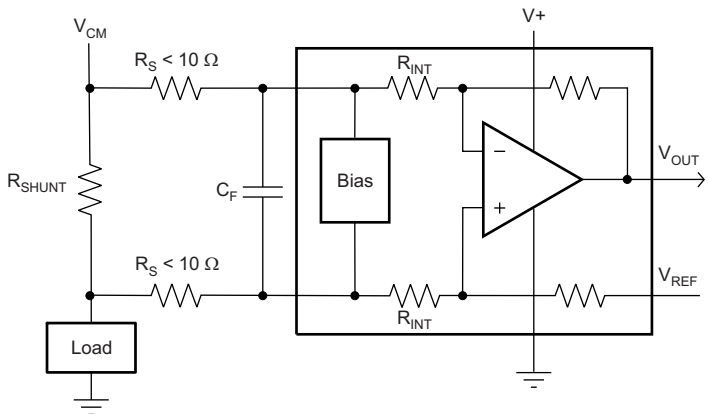

图 24. Filter at Input Pins

The addition of external series resistance, however, creates an additional error in the measurement so the value of these series resistors must be kept to 10 Ω (or less, if possible) to reduce impact to accuracy. The internal bias network shown in 图 24 that is present at the input pins creates a mismatch in input bias currents when a differential voltage is applied between the input pins. If additional external series filter resistors are added to the circuit, the mismatch in bias currents results in a mismatch of voltage drops across the filter resistors. This mismatch creates a differential error voltage that subtracts from the voltage developed at the shunt resistor. This error results in a voltage at the device input pins that is different than the voltage developed across the shunt resistor. Without the additional series resistance, the mismatch in input bias currents has little effect on device operation. The amount of error these external filter resistors add to the measurement can be calculated using 公式 2 where the gain error factor is calculated using 公式 1.

The amount of variance in the differential voltage present at the device input relative to the voltage developed at the shunt resistor is based both on the external series resistance value as well as the internal input resistors, R_3 and R_4 (or R_{INT} as shown in 图 24). The reduction of the shunt voltage reaching the device input pins appears as a gain error when comparing the output voltage relative to the voltage across the shunt resistor. A factor can be calculated to determine the amount of gain error that is introduced by the addition of external series resistance. Use 公式 1 to calculate the expected deviation from the shunt voltage to what is measured at the device input pins.

$$\text{Gain Error Factor} = \frac{(1250 \times R_{INT})}{(1250 \times R_S) + (1250 \times R_{INT}) + (R_S \times R_{INT})}$$

where:

- R_{INT} is the internal input resistor (R_3 and R_4), and
- R_S is the external series resistance. (1)

Device Functional Modes (接下页)

With the adjustment factor from 公式 1 including the device internal input resistance, this factor varies with each gain version, as shown in 表 1. 表 2 lists each individual device gain-error factor.

表 1. Input Resistance

PRODUCT	GAIN	R_{INT} (kΩ)
INA210-Q1	200	5
INA211-Q1	500	2
INA212-Q1	1000	1
INA213-Q1	50	20
INA214-Q1	100	10
INA215-Q1	75	13.3

表 2. Device Gain Error Factor

PRODUCT	SIMPLIFIED GAIN ERROR FACTOR
INA210-Q1	$\frac{1000}{R_S + 1000}$
INA211-Q1	$\frac{10{,}000}{(13 \times R_S) + 10{,}000}$
INA212-Q1	$\frac{5000}{(9 \times R_S) + 5000}$
INA213-Q1	$\frac{20{,}000}{(17 \times R_S) + 20{,}000}$
INA214-Q1	$\frac{10{,}000}{(9 \times R_S) + 10{,}000}$
INA215-Q1	$\frac{8{,}000}{(7 \times R_S) + 8{,}000}$

Use 公式 2 to calculate the gain error that can be expected from the addition of the external series resistors.

$$\text{Gain Error (\%)} = 100 - (100 \times \text{Gain Error Factor}) \tag{2}$$

For example, using an INA212-Q1 device and the corresponding gain error equation from 表 2, a series resistance of 10 Ω results in a gain error factor of 0.982. The corresponding gain error is then calculated using 公式 2, resulting in a gain error of approximately 1.77% solely because of the external 10-Ω series resistors. Using an INA213-Q1 with the same 10-Ω series resistor results in a gain error factor of 0.991 and a gain error of 0.84% again solely because of these external resistors.

版权 © 2009–2020, Texas Instruments Incorporated

7.4.2 Shutting Down the INA21x-Q1 Series

While the INA21x-Q1 family of devices does not have a shutdown pin, the low-power consumption of the device allows the output of a logic gate or transistor switch to power the device. This gate or switch turns on and turns off the INA21x-Q1 power-supply quiescent current.

However, in current-shunt monitoring applications, the amount of current drained from the shunt circuit in shutdown conditions must be considered. Evaluating this current drain involves considering the simplified schematic of the INA21x-Q1 family of devices in shutdown mode shown in 图 25.

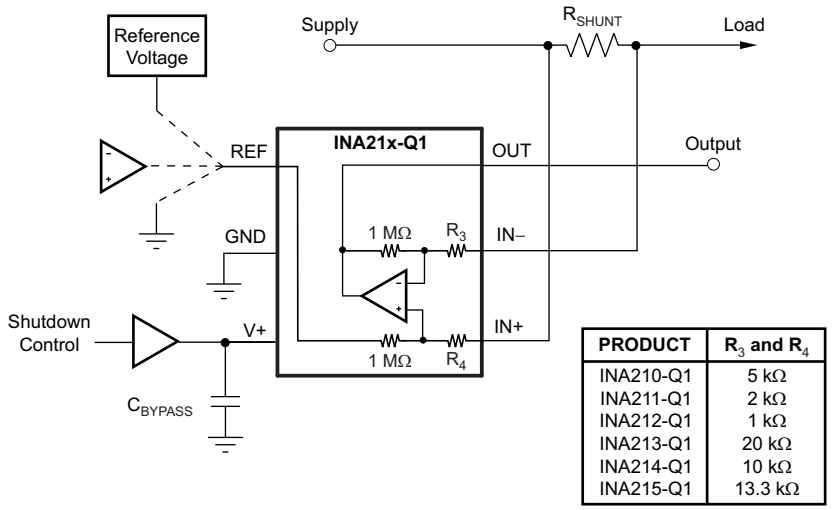

PRODUCT	R_3 and R_4
INA210-Q1	5 kΩ
INA211-Q1	2 kΩ
INA212-Q1	1 kΩ
INA213-Q1	20 kΩ
INA214-Q1	10 kΩ
INA215-Q1	13.3 kΩ

Copyright © 2017, Texas Instruments Incorporated

NOTE: 1-MΩ paths from shunt inputs to reference and INA21x-Q1 outputs.

图 25. Basic Circuit for Shutting Down INA21x-Q1 With a Grounded Reference

Slightly more than a 1-MΩ impedance (from the combination of 1-MΩ feedback and 5-kΩ input resistors) exists from each input of the INA21x-Q1 family of devices to the OUT pin and to the REF pin. The amount of current flowing through these pins depends on the respective ultimate connection. For example, if the REF pin is grounded, the calculation of the effect of the 1-MΩ impedance from the shunt to ground is straightforward. However, if the reference or operational amplifier (op amp) is powered when the INA21x-Q1 family of devices is shut down, the calculation is direct. Instead of assuming 1 MΩ to ground, however, assume 1 MΩ to the reference voltage. If the reference or op amp is also shut down, some knowledge of the reference or op amp output impedance under shutdown conditions is required. For instance, if the reference source behaves as an open circuit when not powered, little or no current flows through the 1-MΩ path.

Regarding the 1-MΩ path to the output pin, the output stage of a disabled INA21x-Q1 device does constitute a good path to ground; consequently, this current is directly proportional to a shunt common-mode voltage present across a 1-MΩ resistor.

注

When the device is powered up, an additional, nearly constant and well-matched 25-µA current flows in each of the inputs as long as the shunt common-mode voltage is 3 V or higher. Below 2-V common-mode, the only current effects are the result of the 1-MΩ resistors.

7.4.3 REF Input Impedance Effects

As with any difference amplifier, the INA21x-Q1 common-mode rejection ratio is affected by any impedance present at the REF input. This concern is not a problem when the REF pin is connected directly to most references or power supplies. When using resistive dividers from the power supply or a reference voltage, buffer the REF pin by an op amp.

In systems where the INA21x-Q1 output can be sensed differentially, such as by a differential input analog-to-digital converter (ADC) or by using two separate ADC inputs, the effects of external impedance on the REF input can be cancelled. 图 26 shows a method of taking the output from the INA21x-Q1 family of devices by using the REF pin as a reference.

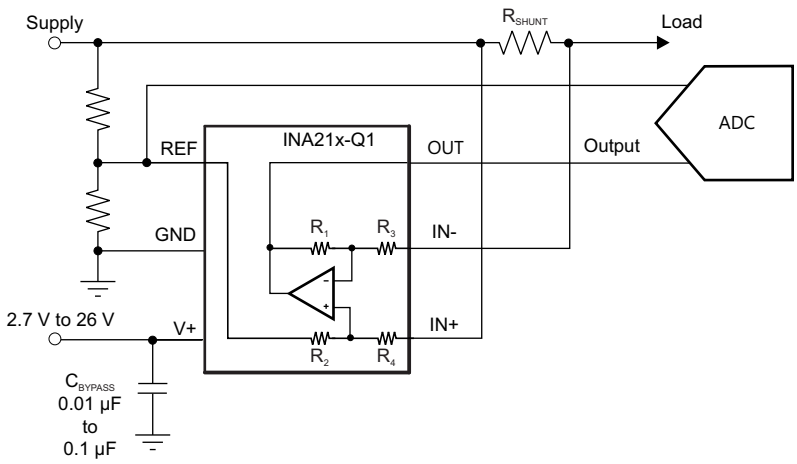

Copyright © 2017, Texas Instruments Incorporated

图 26. Sensing INA21x-Q1 to Cancel Effects of Impedance on the REF Input

7.4.4 Using the INA21x-Q1 with Common-Mode Transients Above 26 V

With a small amount of additional circuitry, the INA21x-Q1 family of devices can be used in circuits subject to transients higher than 26 V, such as automotive applications. Use only Zener diode or Zener-type transient absorbers (sometimes referred to as *transzorbs*)—any other type of transient absorber has an unacceptable time delay. Begin by adding a pair of resistors as a working impedance for the Zener diode, as shown in 图 27. Keeping these resistors as small as possible is preferable, typically around 10 Ω. Larger values can be used with an effect on gain that is discussed in the *Input Filtering* section. Because this circuit limits only short-term transients, many applications are satisfied with a 10-Ω resistor along with conventional Zener diodes of the lowest power rating that can be found. This combination uses the least amount of board space. These diodes can be found in packages as small as SOT-523 or SOD-523.

版权 © 2009–2020, Texas Instruments Incorporated

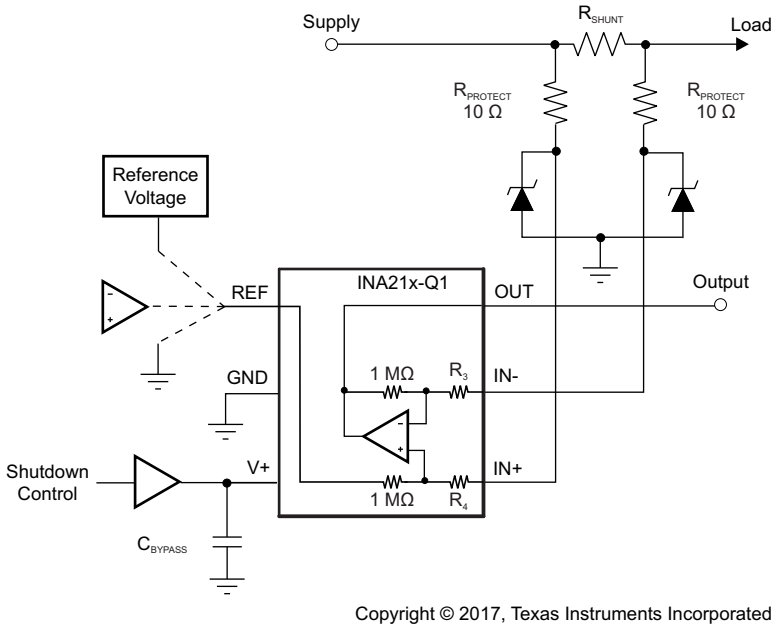

图 27. INA21x-Q1 Transient Protection Using Dual Zener Diodes

In the event that low-power Zener diodes do not have sufficient transient absorption capability and a higher power transzorb must be used, the most package-efficient solution then involves using a single transzorb and back-to-back diodes between the device inputs. The most space-efficient solutions are dual series-connected diodes in a single SOT-523 or SOD-523 package. 图 28 shows this method. In either of these examples, the total board area required by the INA21x-Q1 family of devices with all protective components is less than that of an SO-8 package, and only slightly greater than that of an MSOP-8 package.

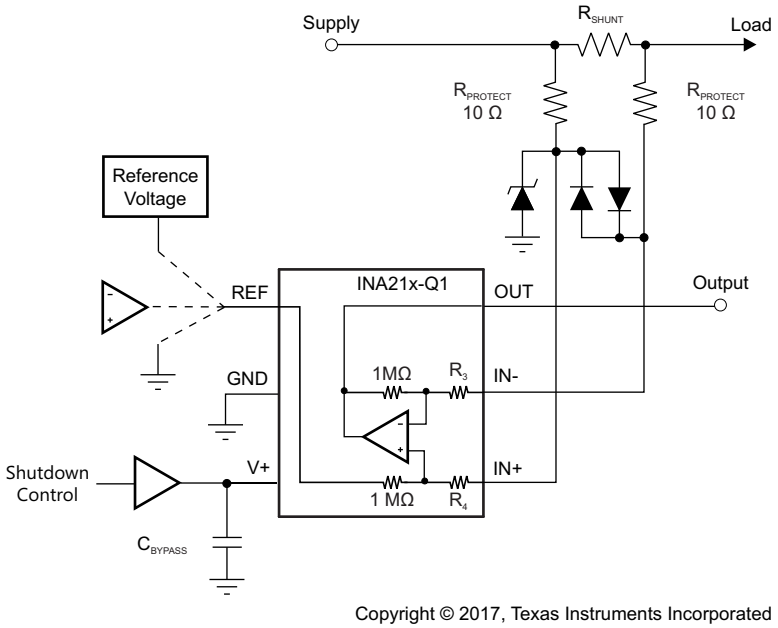

图 28. INA21x-Q1 Transient Protection Using a Single Transzorb and Input Clamps

7.4.5 Improving Transient Robustness

CAUTION

Applications involving large input transients with excessive dV/dt above 2 kV per microsecond present at the device input pins can cause damage to the internal ESD structures on version A devices.

The potential damage from large input transients is a result of the internal latching of the ESD structure to ground when this transient occurs at the input. With significant current available in most current-sensing applications, the large current flowing through the input transient-triggered, ground-shorted ESD structure quickly results in damage to the silicon. External filtering can be used to attenuate the transient signal prior to reaching the inputs to avoid the latching condition. Care must be taken to ensure that external series input resistance does not significantly impact gain error accuracy. For accuracy purposes, keep these resistances under 10 Ω if possible. Ferrite beads are recommended for this filter because of the inherently low-dc ohmic value. Ferrite beads with less than 10 Ω of resistance at dc and over 600 Ω of resistance at 100 MHz to 200 MHz are recommended. The recommended capacitor values for this filter are between 0.01 µF and 0.1 µF to ensure adequate attenuation in the high-frequency region. 图 29 illustrates this protection scheme.

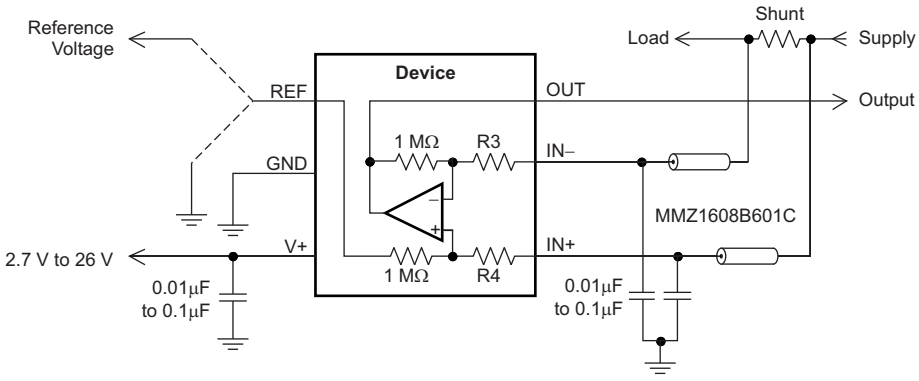

Copyright © 2017, Texas Instruments Incorporated

图 29. Transient Protection

To minimize the cost of adding these external components to protect the device in applications where large transient signals may be present, version B and C devices are now available with new ESD structures that are not susceptible to this latching condition. Version B and C devices are incapable of sustaining these damage-causing latched conditions so they do not have the same sensitivity to the transients that the version A devices have, thus making the version B and C devices a better fit for these applications.

版权 © 2009–2020, Texas Instruments Incorporated

8 Application and Implementation

注

Information in the following applications sections is not part of the TI component specification, and TI does not warrant its accuracy or completeness. TI's customers are responsible for determining suitability of components for their purposes. Customers should validate and test their design implementation to confirm system functionality.

8.1 Application Information

The INA21x-Q1 family of devices measure the voltage developed across a current-sensing resistor when current passes through the resistor. The ability to drive the reference pin to adjust the functionality of the output signal offers multiple configurations, as discussed throughout the *Typical Applications* section.

8.2 Typical Applications

8.2.1 Unidirectional Operation

Unidirectional operation allows the INA21x-Q1 family of devices to measure currents through a resistive shunt in one direction. The most frequent case of unidirectional operation sets the output at ground by connecting the REF pin to ground. In unidirectional applications where the highest possible accuracy is desirable at very low inputs, bias the REF pin to a convenient value above 50 mV to get the device output swing into the linear range for zero inputs.

A less frequent case of unipolar output biasing is to bias the output by connecting the REF pin to the supply. In this case, the quiescent output for zero input is at quiescent supply. This configuration only responds to negative currents (inverted voltage polarity at the device input).

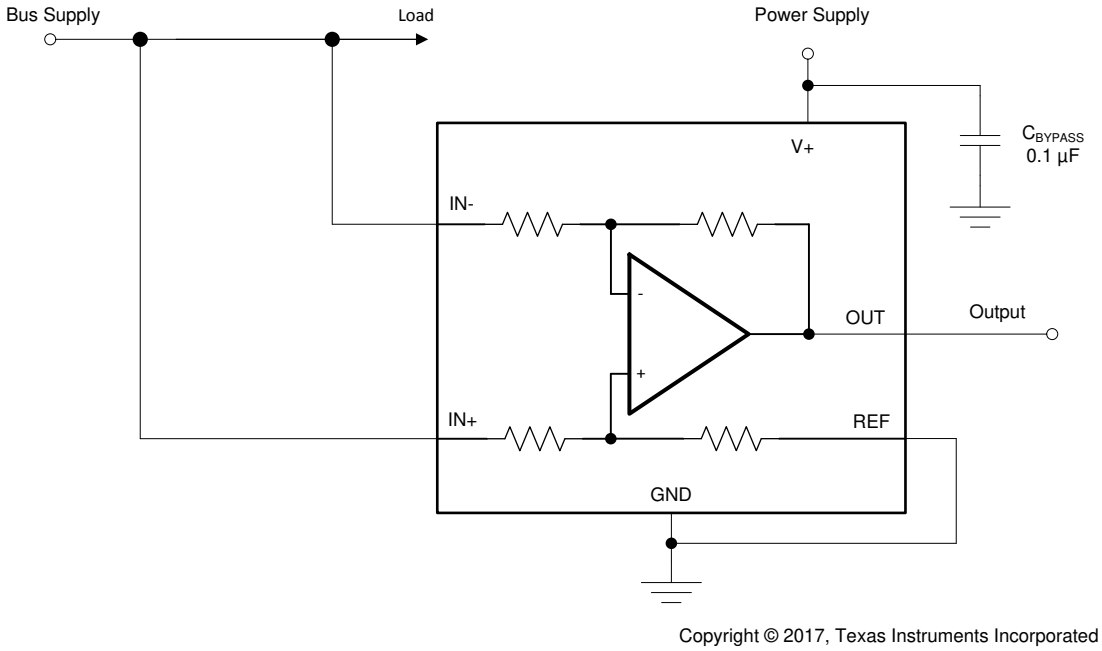

图 30. Unidirectional Application Schematic

8.2.1.1 Design Requirements

The device can be configured to monitor current flowing in one direction (unidirectional) or in both directions (bidirectional) depending on how the REF pin is configured. The most common case is unidirectional where the output is set to ground when no current is flowing by connecting the REF pin to ground, as shown in 图 30. When the input signal increases, the output voltage at the OUT pin increases.

Typical Applications (接下页)

8.2.1.2 Detailed Design Procedure

The linear range of the output stage is limited in how close the output voltage can approach ground under zero input conditions. In unidirectional applications where measuring very-low input currents is desirable, bias the REF pin to a convenient value above 50 mV to get the output into the linear range of the device. To limit common-mode rejection errors, TI recommends buffering the reference voltage connected to the REF pin.

A less frequently-used output biasing method is to connect the REF pin to the supply voltage, V+. This method results in the output voltage saturating at 200 mV below the supply voltage when no differential input signal is present. This method is similar to the output-saturated low condition with no input signal when the REF pin is connected to ground. The output voltage in this configuration only responds to negative currents that develop negative differential input voltage relative to the device IN– pin. Under these conditions, when the differential input signal increases negatively, the output voltage moves downward from the saturated supply voltage. The voltage applied to the REF pin must not exceed the device supply voltage.

8.2.1.3 Application Curve

图 31 shows an example output response of a unidirectional configuration. With the REF pin connected directly to ground, the output voltage is biased to this zero output level. The output rises above the reference voltage for positive differential input signals but cannot fall below the reference voltage for negative differential input signals because of the grounded reference voltage.

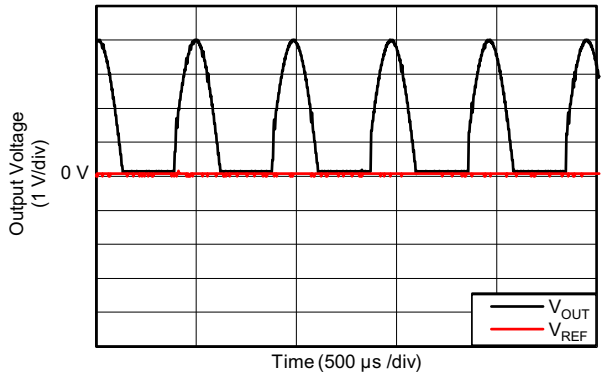

图 31. Unidirectional Application Output Response

版权 © 2009–2020, Texas Instruments Incorporated

Typical Applications（接下页）

8.2.2 Bidirectional Operation

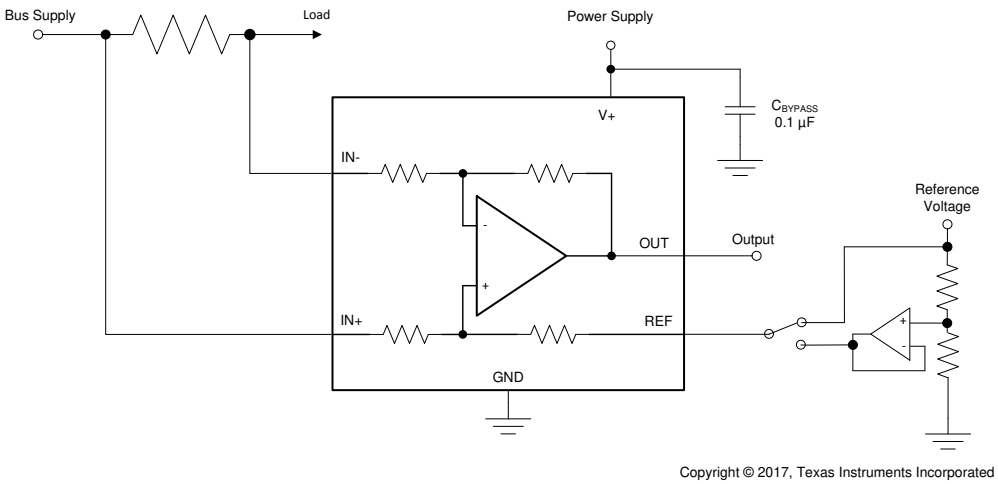

图 32. Bidirectional Application Schematic

8.2.2.1 Design Requirements

The device is a bidirectional, current-sense amplifier capable of measuring currents through a resistive shunt in two directions. This bidirectional monitoring is common in applications that include charging and discharging operations where the current flow-through resistor can change directions.

8.2.2.2 Detailed Design Procedure

The ability to measure this current flowing in both directions is enabled by applying a voltage to the REF pin, as shown in 图 32. The voltage applied to REF (V_{REF}) sets the output state that corresponds to the zero-input level state. The output then responds by increasing above the V_{REF} value for positive differential signals (relative to the IN– pin) and responds by decreasing below the V_{REF} value for negative differential signals. This reference voltage applied to the REF pin can be set anywhere between 0 V to V+. For bidirectional applications, the V_{REF} value is typically set at mid-scale for equal signal range in both current directions. In some cases, however, the V_{REF} value is set at a voltage other than mid-scale when the bidirectional current and corresponding output signal are note required to be symmetrical.

8.2.2.3 Application Curve

图 33 shows an example output response of a bidirectional configuration. With the REF pin connected to a reference voltage, 2.5 V in this case, the output voltage is biased upwards by this reference level. The output rises above the reference voltage for positive differential input signals and falls below the reference voltage for negative differential input signals.

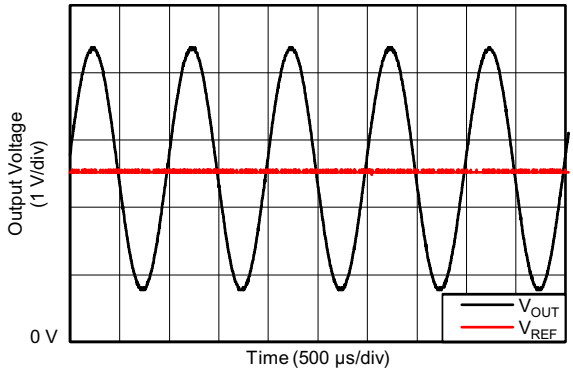

图 33. Bidirectional Application Output Response

9 Power Supply Recommendations

The input circuitry of the INA21x-Q1 family of devices can accurately measure beyond the power-supply voltage, V+. For example, the V+ power supply can be 5 V, whereas the load power-supply voltage can be as high as 26 V. However, the output voltage range of the OUT pin is limited by the voltages on the power-supply pin. The INA21x-Q1 family of devices can withstand the full input-signal range up to 26 V at the input pins, regardless of whether the device has power applied or not.

10 Layout

10.1 Layout Guidelines

- Connect the input pins to the sensing resistor using a Kelvin or 4-wire connection. This connection technique ensures that only the current-sensing resistor impedance is detected between the input pins. Poor routing of the current-sensing resistor commonly results in additional resistance present between the input pins. Given the very-low ohmic value of the current resistor, any additional high-current carrying impedance can cause significant measurement errors.
- Place the power-supply bypass capacitor as closely as possible to the supply and ground pins. The recommended value of this bypass capacitor is 0.1 μF. Additional decoupling capacitance can be added to compensate for noisy or high-impedance power supplies.

10.2 Layout Example

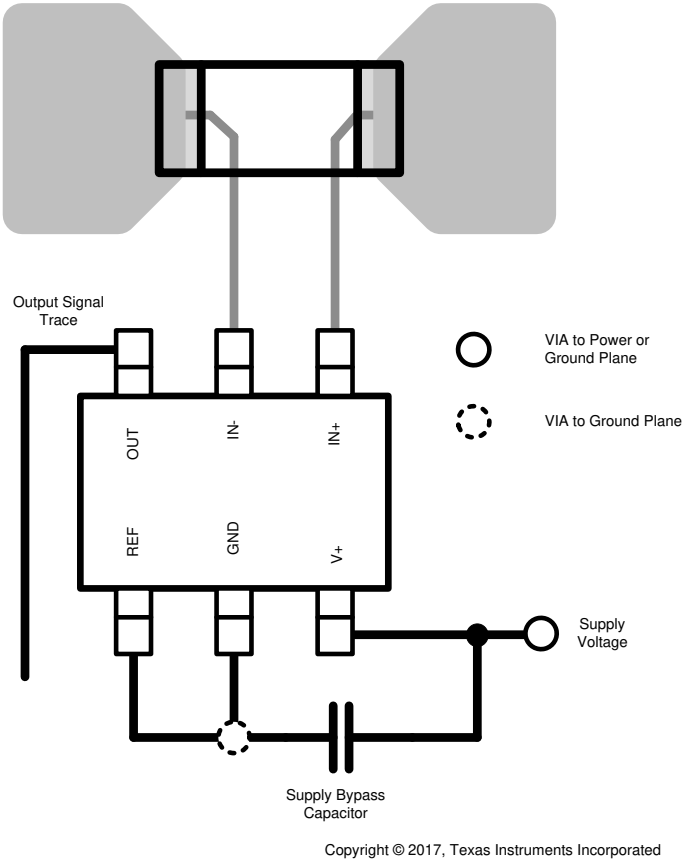

图 34. Recommended Layout

版权 © 2009–2020, Texas Instruments Incorporated

11 器件和文档支持

11.1 文档支持

11.1.1 相关文档

请参阅如下相关文档：

《INA210-215EVM》 用户指南

11.2 相关链接

表 3 列出了快速访问链接。类别包括技术文档、支持与社区资源、工具和软件，以及申请样片或购买产品的快速链接。

表 3. 相关链接

器件	产品文件夹	立即订购	技术文档	工具和软件	支持和社区
INA210-Q1	单击此处	单击此处	单击此处	单击此处	单击此处
INA211-Q1	单击此处	单击此处	单击此处	单击此处	单击此处
INA212-Q1	单击此处	单击此处	单击此处	单击此处	单击此处
INA213-Q1	单击此处	单击此处	单击此处	单击此处	单击此处
INA214-Q1	单击此处	单击此处	单击此处	单击此处	单击此处
INA215-Q1	单击此处	单击此处	单击此处	单击此处	单击此处

11.3 接收文档更新通知

要接收文档更新通知，请导航至 ti.com.cn 上的器件产品文件夹。单击右上角的*通知我*进行注册，即可每周接收产品信息更改摘要。有关更改的详细信息，请查看任何已修订文档中包含的修订历史记录。

11.4 社区资源

TI E2E™ support forums are an engineer's go-to source for fast, verified answers and design help — straight from the experts. Search existing answers or ask your own question to get the quick design help you need.

Linked content is provided "AS IS" by the respective contributors. They do not constitute TI specifications and do not necessarily reflect TI's views; see TI's Terms of Use.

11.5 商标

E2E is a trademark of Texas Instruments.
All other trademarks are the property of their respective owners.

11.6 静电放电警告

ESD 可能会损坏该集成电路。德州仪器 (TI) 建议通过适当的预防措施处理所有集成电路。如果不遵守正确的处理措施和安装程序，可能会损坏集成电路。

ESD 的损坏小至导致微小的性能降级，大至整个器件故障。 精密的集成电路可能更容易受到损坏，这是因为非常细微的参数更改都可能会导致器件与其发布的规格不相符。

11.7 Glossary

SLYZ022 — *TI Glossary*.

This glossary lists and explains terms, acronyms, and definitions.

12 机械、封装和可订购信息

以下页面包含机械、封装和可订购信息。这些信息是指定器件的最新可用数据。数据如有变更，恕不另行通知，且不会对此文档进行修订。如需获取此数据表的浏览器版本，请查阅左侧的导航栏。

PACKAGING INFORMATION

Orderable Device	Status (1)	Package Type	Package Drawing	Pins	Package Qty	Eco Plan (2)	Lead finish/ Ball material (6)	MSL Peak Temp (3)	Op Temp (°C)	Device Marking (4/5)	Samples
INA210BQDCKRQ1	ACTIVE	SC70	DCK	6	3000	RoHS & Green	NIPDAU	Level-2-260C-1 YEAR	-40 to 125	13F	Samples
INA210CQDCKRQ1	ACTIVE	SC70	DCK	6	3000	RoHS & Green	NIPDAU	Level-2-260C-1 YEAR	-40 to 125	17D	Samples
INA211BQDCKRQ1	ACTIVE	SC70	DCK	6	3000	RoHS & Green	NIPDAU	Level-2-260C-1 YEAR	-40 to 125	13G	Samples
INA211CQDCKRQ1	ACTIVE	SC70	DCK	6	3000	RoHS & Green	NIPDAU	Level-2-260C-1 YEAR	-40 to 125	17E	Samples
INA212AQDCKRQ1	ACTIVE	SC70	DCK	6	3000	RoHS & Green	NIPDAU	Level-2-260C-1 YEAR	-40 to 125	SJW	Samples
INA212BQDCKRQ1	ACTIVE	SC70	DCK	6	3000	RoHS & Green	NIPDAU	Level-2-260C-1 YEAR	-40 to 125	13H	Samples
INA212CQDCKRQ1	ACTIVE	SC70	DCK	6	3000	RoHS & Green	NIPDAU	Level-2-260C-1 YEAR	-40 to 125	17F	Samples
INA213AQDCKRQ1	ACTIVE	SC70	DCK	6	3000	RoHS & Green	NIPDAU	Level-2-260C-1 YEAR	-40 to 125	OBX	Samples
INA213BQDCKRQ1	ACTIVE	SC70	DCK	6	3000	RoHS & Green	NIPDAU	Level-2-260C-1 YEAR	-40 to 125	13I	Samples
INA213CQDCKRQ1	ACTIVE	SC70	DCK	6	3000	RoHS & Green	NIPDAU	Level-2-260C-1 YEAR	-40 to 125	17G	Samples
INA214AQDCKRQ1	ACTIVE	SC70	DCK	6	3000	RoHS & Green	NIPDAU	Level-2-260C-1 YEAR	-40 to 125	OFT	Samples
INA214BQDCKRQ1	ACTIVE	SC70	DCK	6	3000	RoHS & Green	NIPDAU	Level-2-260C-1 YEAR	-40 to 125	13J	Samples
INA214CQDCKRQ1	ACTIVE	SC70	DCK	6	3000	RoHS & Green	NIPDAU	Level-2-260C-1 YEAR	-40 to 125	17H	Samples
INA215BQDCKRQ1	ACTIVE	SC70	DCK	6	3000	RoHS & Green	NIPDAU	Level-2-260C-1 YEAR	-55 to 125	13K	Samples
INA215CQDCKRQ1	ACTIVE	SC70	DCK	6	3000	RoHS & Green	NIPDAU	Level-2-260C-1 YEAR	-40 to 125	17I	Samples

(1) The marketing status values are defined as follows:
ACTIVE: Product device recommended for new designs.
LIFEBUY: TI has announced that the device will be discontinued, and a lifetime-buy period is in effect.
NRND: Not recommended for new designs. Device is in production to support existing customers, but TI does not recommend using this part in a new design.
PREVIEW: Device has been announced but is not in production. Samples may or may not be available.
OBSOLETE: TI has discontinued the production of the device.

(2) **RoHS:** TI defines "RoHS" to mean semiconductor products that are compliant with the current EU RoHS requirements for all 10 RoHS substances, including the requirement that RoHS substance do not exceed 0.1% by weight in homogeneous materials. Where designed to be soldered at high temperatures, "RoHS" products are suitable for use in specified lead-free processes. TI may reference these types of products as "Pb-Free".
RoHS Exempt: TI defines "RoHS Exempt" to mean products that contain lead but are compliant with EU RoHS pursuant to a specific EU RoHS exemption.
Green: TI defines "Green" to mean the content of Chlorine (Cl) and Bromine (Br) based flame retardants meet JS709B low halogen requirements of <=1000ppm threshold. Antimony trioxide based flame retardants must also meet the <=1000ppm threshold requirement.

(3) MSL, Peak Temp. - The Moisture Sensitivity Level rating according to the JEDEC industry standard classifications, and peak solder temperature.

(4) There may be additional marking, which relates to the logo, the lot trace code information, or the environmental category on the device.

(5) Multiple Device Markings will be inside parentheses. Only one Device Marking contained in parentheses and separated by a "~" will appear on a device. If a line is indented then it is a continuation of the previous line and the two combined represent the entire Device Marking for that device.

(6) Lead finish/Ball material - Orderable Devices may have multiple material finish options. Finish options are separated by a vertical ruled line. Lead finish/Ball material values may wrap to two lines if the finish value exceeds the maximum column width.

Important Information and Disclaimer: The information provided on this page represents TI's knowledge and belief as of the date that it is provided. TI bases its knowledge and belief on information provided by third parties, and makes no representation or warranty as to the accuracy of such information. Efforts are underway to better integrate information from third parties. TI has taken and continues to take reasonable steps to provide representative and accurate information but may not have conducted destructive testing or chemical analysis on incoming materials and chemicals. TI and TI suppliers consider certain information to be proprietary, and thus CAS numbers and other limited information may not be available for release.

In no event shall TI's liability arising out of such information exceed the total purchase price of the TI part(s) at issue in this document sold by TI to Customer on an annual basis.

TAPE AND REEL INFORMATION

REEL DIMENSIONS

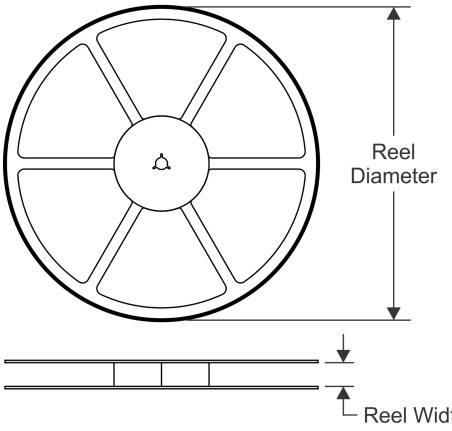

TAPE DIMENSIONS

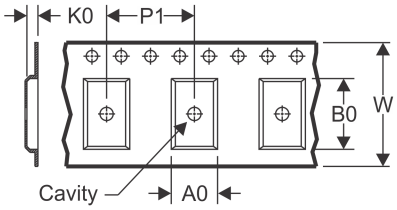

A0	Dimension designed to accommodate the component width
B0	Dimension designed to accommodate the component length
K0	Dimension designed to accommodate the component thickness
W	Overall width of the carrier tape
P1	Pitch between successive cavity centers

QUADRANT ASSIGNMENTS FOR PIN 1 ORIENTATION IN TAPE

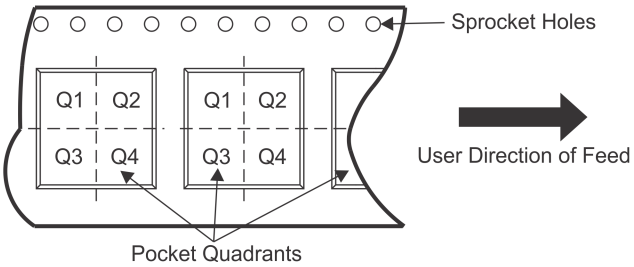

*All dimensions are nominal

Device	Package Type	Package Drawing	Pins	SPQ	Reel Diameter (mm)	Reel Width W1 (mm)	A0 (mm)	B0 (mm)	K0 (mm)	P1 (mm)	W (mm)	Pin1 Quadrant
INA210BQDCKRQ1	SC70	DCK	6	3000	178.0	9.0	2.4	2.5	1.2	4.0	8.0	Q3
INA210CQDCKRQ1	SC70	DCK	6	3000	178.0	9.0	2.4	2.5	1.2	4.0	8.0	Q3
INA211BQDCKRQ1	SC70	DCK	6	3000	178.0	9.0	2.4	2.5	1.2	4.0	8.0	Q3
INA211CQDCKRQ1	SC70	DCK	6	3000	178.0	9.0	2.4	2.5	1.2	4.0	8.0	Q3
INA212AQDCKRQ1	SC70	DCK	6	3000	178.0	9.0	2.4	2.5	1.2	4.0	8.0	Q3
INA212BQDCKRQ1	SC70	DCK	6	3000	178.0	9.0	2.4	2.5	1.2	4.0	8.0	Q3
INA212CQDCKRQ1	SC70	DCK	6	3000	178.0	9.0	2.4	2.5	1.2	4.0	8.0	Q3
INA213AQDCKRQ1	SC70	DCK	6	3000	178.0	8.4	2.4	2.5	1.2	4.0	8.0	Q3
INA213AQDCKRQ1	SC70	DCK	6	3000	180.0	8.4	2.47	2.3	1.25	4.0	8.0	Q3
INA213BQDCKRQ1	SC70	DCK	6	3000	178.0	9.0	2.4	2.5	1.2	4.0	8.0	Q3
INA213CQDCKRQ1	SC70	DCK	6	3000	178.0	9.0	2.4	2.5	1.2	4.0	8.0	Q3
INA214AQDCKRQ1	SC70	DCK	6	3000	178.0	8.4	2.4	2.5	1.2	4.0	8.0	Q3
INA214AQDCKRQ1	SC70	DCK	6	3000	180.0	8.4	2.47	2.3	1.25	4.0	8.0	Q3
INA214BQDCKRQ1	SC70	DCK	6	3000	178.0	9.0	2.4	2.5	1.2	4.0	8.0	Q3
INA214CQDCKRQ1	SC70	DCK	6	3000	178.0	9.0	2.4	2.5	1.2	4.0	8.0	Q3
INA215BQDCKRQ1	SC70	DCK	6	3000	178.0	9.0	2.4	2.5	1.2	4.0	8.0	Q3
INA215CQDCKRQ1	SC70	DCK	6	3000	178.0	9.0	2.4	2.5	1.2	4.0	8.0	Q3

TAPE AND REEL BOX DIMENSIONS

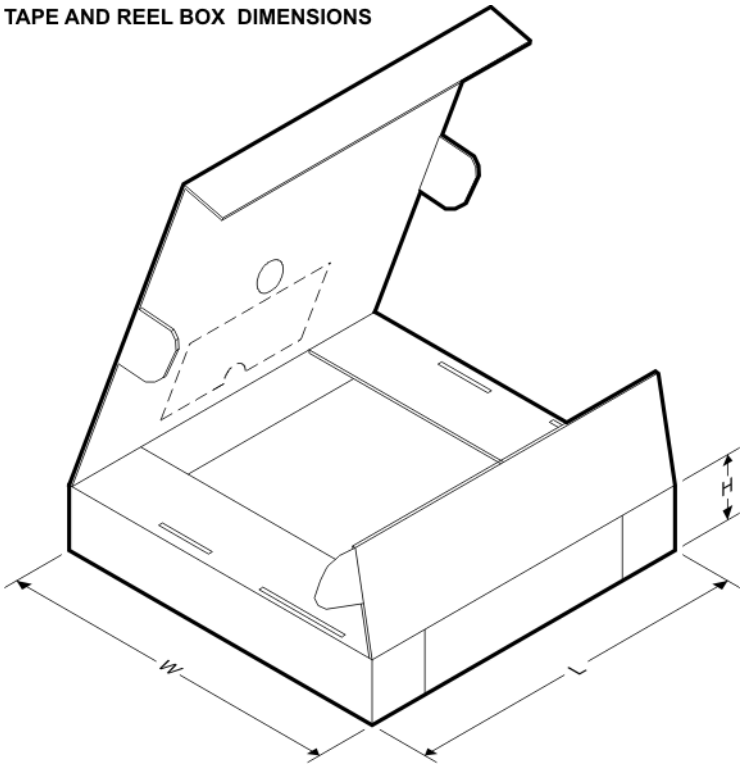

*All dimensions are nominal

Device	Package Type	Package Drawing	Pins	SPQ	Length (mm)	Width (mm)	Height (mm)
INA210BQDCKRQ1	SC70	DCK	6	3000	180.0	180.0	18.0
INA210CQDCKRQ1	SC70	DCK	6	3000	180.0	180.0	18.0
INA211BQDCKRQ1	SC70	DCK	6	3000	180.0	180.0	18.0
INA211CQDCKRQ1	SC70	DCK	6	3000	180.0	180.0	18.0
INA212AQDCKRQ1	SC70	DCK	6	3000	180.0	180.0	18.0
INA212BQDCKRQ1	SC70	DCK	6	3000	180.0	180.0	18.0
INA212CQDCKRQ1	SC70	DCK	6	3000	180.0	180.0	18.0
INA213AQDCKRQ1	SC70	DCK	6	3000	340.0	340.0	38.0
INA213AQDCKRQ1	SC70	DCK	6	3000	213.0	191.0	35.0
INA213BQDCKRQ1	SC70	DCK	6	3000	180.0	180.0	18.0
INA213CQDCKRQ1	SC70	DCK	6	3000	180.0	180.0	18.0
INA214AQDCKRQ1	SC70	DCK	6	3000	340.0	340.0	38.0
INA214AQDCKRQ1	SC70	DCK	6	3000	202.0	201.0	28.0
INA214BQDCKRQ1	SC70	DCK	6	3000	180.0	180.0	18.0
INA214CQDCKRQ1	SC70	DCK	6	3000	180.0	180.0	18.0
INA215BQDCKRQ1	SC70	DCK	6	3000	180.0	180.0	18.0
INA215CQDCKRQ1	SC70	DCK	6	3000	180.0	180.0	18.0

DCK (R–PDSO–G6) PLASTIC SMALL–OUTLINE PACKAGE

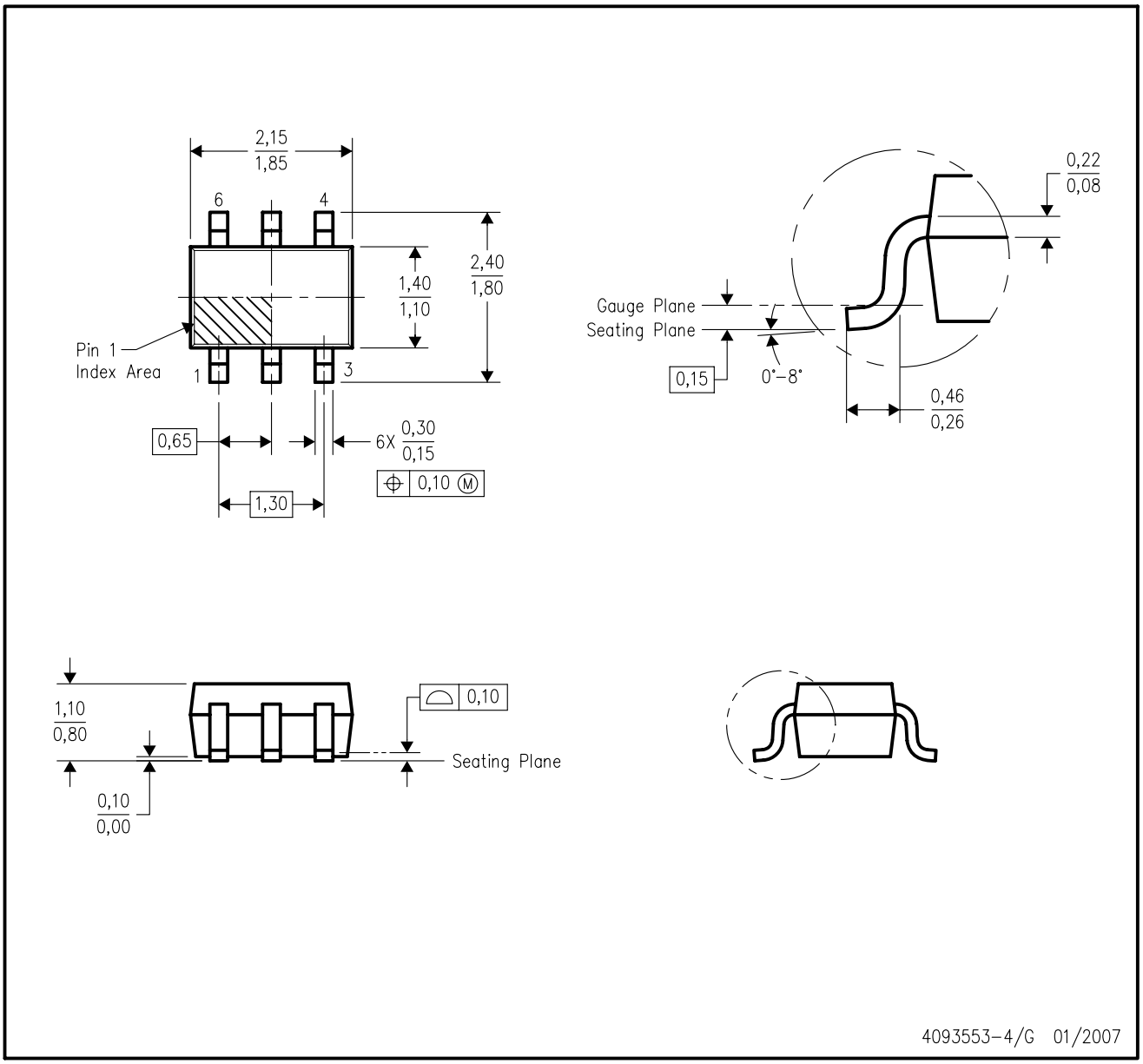

NOTES:
A. All linear dimensions are in millimeters.
B. This drawing is subject to change without notice.
C. Body dimensions do not include mold flash or protrusion. Mold flash and protrusion shall not exceed 0.15 per side.
D. Falls within JEDEC MO–203 variation AB.

DCK (R-PDSO-G6) PLASTIC SMALL OUTLINE

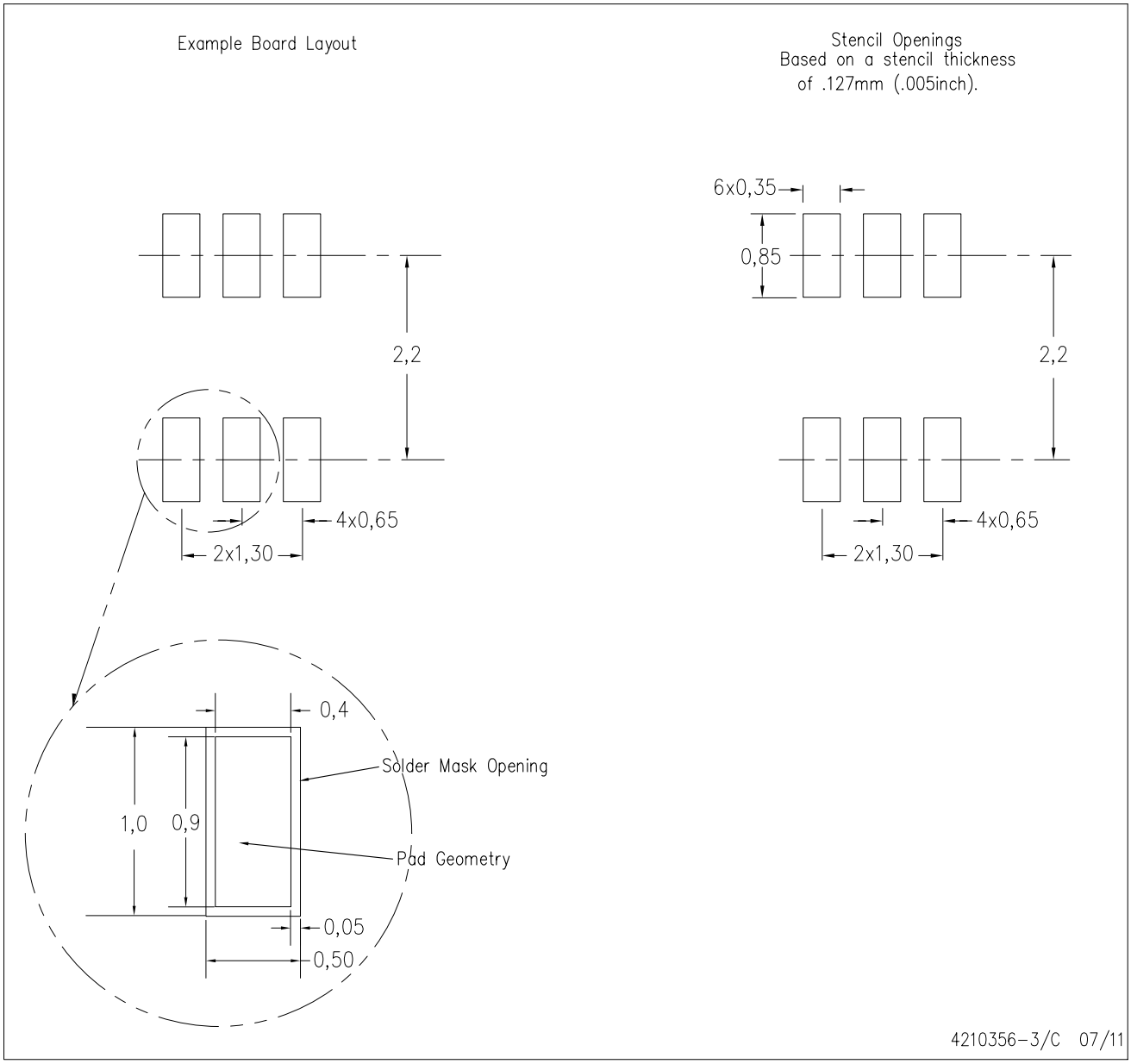

NOTES:
A. All linear dimensions are in millimeters.
B. This drawing is subject to change without notice.
C. Customers should place a note on the circuit board fabrication drawing not to alter the center solder mask defined pad.
D. Publication IPC-7351 is recommended for alternate designs.
E. Laser cutting apertures with trapezoidal walls and also rounding corners will offer better paste release. Customers should contact their board assembly site for stencil design recommendations. Example stencil design based on a 50% volumetric metal load solder paste. Refer to IPC-7525 for other stencil recommendations.

重要声明和免责声明

TI“按原样”提供技术和可靠性数据（包括数据表）、设计资源（包括参考设计）、应用或其他设计建议、网络工具、安全信息和其他资源，不保证没有瑕疵且不做出任何明示或暗示的担保，包括但不限于对适销性、某特定用途方面的适用性或不侵犯任何第三方知识产权的暗示担保。

这些资源可供使用 TI 产品进行设计的熟练开发人员使用。您将自行承担以下全部责任：(1) 针对您的应用选择合适的 TI 产品，(2) 设计、验证并测试您的应用，(3) 确保您的应用满足相应标准以及任何其他功能安全、信息安全、监管或其他要求。

这些资源如有变更，恕不另行通知。TI 授权您仅可将这些资源用于研发本资源所述的 TI 产品的应用。严禁对这些资源进行其他复制或展示。您无权使用任何其他 TI 知识产权或任何第三方知识产权。您应全额赔偿因在这些资源的使用中对 TI 及其代表造成的任何索赔、损害、成本、损失和债务，TI 对此概不负责。

TI 提供的产品受 TI 的销售条款或 ti.com 上其他适用条款/TI 产品随附的其他适用条款的约束。TI 提供这些资源并不会扩展或以其他方式更改 TI 针对 TI 产品发布的适用的担保或担保免责声明。

TI 反对并拒绝您可能提出的任何其他或不同的条款。

邮寄地址：Texas Instruments, Post Office Box 655303, Dallas, Texas 75265
Copyright © 2021，德州仪器 (TI) 公司