TPS383x Nano Power Voltage Supervisor With Selectable Reset Delay

1 Features

- Supply current: 220 nA (typical)
- Precision supply voltage supervision range: 1.8 V, 2.5 V, 3.0 V, and 3.3 V
- Power-on reset generator with selectable delay time: 10 ms or 200 ms
- Push and pull $\overline{\text{RESET}}$ output (TPS3836), Push and pull RESET output (TPS3837), or open-drain $\overline{\text{RESET}}$ output (TPS3838)
- Manual reset
- 5-pin SOT23 and 2-mm × 2-mm, 6-pin SON packages
- Temperature range: –40°C to 85°C

2 Applications

- Applications using low-power DSPs, microcontrollers, or microprocessors
- Portable- and battery-powered equipment
- Intelligent instruments
- Wireless communication systems
- Notebook computers
- Applications using the MSP430™
- For automotive systems, see TPS383x-Q1

3 Description

The TPS3836, TPS3837, and TPS3838 device families of supervisory circuits provide circuit initialization and timing supervision, primarily for digital signal processors (DSP) and processor-based systems.

During power-on, $\overline{\text{RESET}}$ is asserted when the supply voltage V_{DD} becomes higher than 1.1 V. Thereafter, the supervisory circuit monitors V_{DD} and keeps the $\overline{\text{RESET}}$ output active as long as V_{DD} remains below the threshold voltage of V_{IT}. An internal timer delays the return of the output to the inactive state (high) to ensure proper system reset. The delay time starts after V_{DD} rises above the threshold voltage V_{IT}.

When CT is connected to GND, a fixed delay time of typically 10 ms is asserted. When connected to V_{DD}, the delay time is typically 200 ms. When the supply voltage drops below the threshold voltage V_{IT}, the output becomes active (low) again. All the devices of this family have a fixed-sense threshold voltage (V_{IT}) set by an internal voltage divider.

The TPS3836 has an active-low, push-pull $\overline{\text{RESET}}$ output. The TPS3837 has an active-high, push-pull RESET, and the TPS3838 integrates an active-low, open-drain $\overline{\text{RESET}}$ output. The product spectrum is designed for supply voltages of 1.8 V, 2.5 V, 3.0 V, and 3.3 V. The circuits are available in either a SOT23-5 or a 2-mm × 2-mm SON-6 package. The TPS3836, TPS3837, and TPS3838 families are characterized for operation over a temperature range of –40°C to 85°C.

Device Information(1)

PART NUMBER	PACKAGE	BODY SIZE (NOM)
TPS383x	WSON (6)	2.00 mm × 2.00 mm
	SOT (5)	2.90 mm × 1.60 mm

(1) For all available packages, see the orderable addendum at the end of the data sheet.

Typical Application Circuit

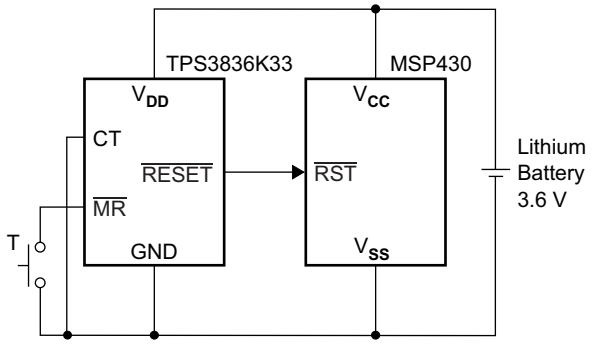

An IMPORTANT NOTICE at the end of this data sheet addresses availability, warranty, changes, use in safety-critical applications, intellectual property matters and other important disclaimers. PRODUCTION DATA.

Table of Contents

1 Features ... 1
2 Applications ... 1
3 Description ... 1
4 Revision History ... 2
5 Device Comparison Table ... 3
6 Pin Configuration and Functions ... 3
7 Specifications ... 4
7.1 Absolute Maximum Ratings ... 4
7.2 Dissipation Ratings ... 4
7.3 ESD Ratings ... 4
7.4 Recommended Operating Conditions ... 4
7.5 Thermal Information ... 5
7.6 Electrical Characteristics ... 5
7.7 Timing Requirements ... 6
7.8 Switching Characteristics ... 6
7.9 Typical Characteristics ... 7
8 Parameter Measurement Information ... 8
8.1 Timing Diagram ... 8
9 Detailed Description ... 9
9.1 Overview ... 9
9.2 Functional Block Diagram ... 9
9.3 Feature Description ... 9
9.4 Device Functional Modes ... 10
10 Application and Implementation ... 11
10.1 Application Information ... 11
10.2 Typical Application ... 11
11 Power Supply Recommendations ... 13
12 Layout ... 13
12.1 Layout Guidelines ... 13
12.2 Layout Example ... 13
13 Device and Documentation Support ... 14
13.1 Related Links ... 14
13.2 Receiving Notification of Documentation Updates ... 14
13.3 Support Resources ... 14
13.4 Trademarks ... 14
13.5 Electrostatic Discharge Caution ... 14
13.6 Glossary ... 14
14 Mechanical, Packaging, and Orderable Information ... 14

4 Revision History

Changes from Revision E (October 2010) to Revision F — **Page**

- Changed format to meet latest data sheet standards; changed data sheet title, added *Device Information* table, *Pin Configurations and Functions*, *Parameter Measurement Information*, *Detailed Description*, *Application and Implementation*, *Power Supply Recommendations*, *Layout*, *Receiving Notification of Documentation Updates*, and *Support Resources* sections. Moved existing sections into the new format ... 1
- Changed 2x2 WSON to 2-mm × 2-mm WSON in fifth Features bullet ... 1
- Changed link to automotive data sheet ... 1
- Added full acronym name for DSP to first sentence of *Description* section ... 1
- Changed 2x2 WSON to 2-mm × 2-mm WSON in last paragraph of *Description* section ... 1
- Changed *Ordering Information* table to *Device Comparison Table* ... 3
- Deleted soldering temperature parameter from *Absolute Maximum Ratings* table ... 4
- Moved storage temperature range to *Absolute Maximum Ratings* table ... 4
- Changed *Handling Ratings* table to *ESD Ratings* ... 4
- Added *Thermal Information* table ... 5
- Moved propagation (delay) time maximum values to the TYP column ... 6
- Changed propagation times for the high-to-low-level output and low-to-high-level output from: 0.1 µs to: 0.3 µs ... 6

Copyright © 2000–2019, Texas Instruments Incorporated

5 Device Comparison Table[(1)]

PRODUCT	NOMINAL SUPPLY VOLTAGE	THRESHOLD VOLTAGE (V_{IT})[(1)]
TPS383xE18	1.8 V	1.71 V
TPS383xJ25	2.5 V	2.25 V
TPS383xH30	3.0 V	2.79 V
TPS383xL30	3.0 V	2.64 V
TPS383xK33	3.3 V	2.93 V

(1) For the most current package and ordering information see the Package Option Addendum at the end of this document, or see the TI web site at www.ti.com.
(1) Custom threshold voltages are available. Minimum order quantities apply. Contact factory for details and availability.

6 Pin Configuration and Functions

TPS3838 DRV Package
6-Pin WSON
(Top View)

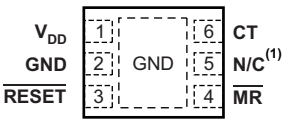

(1) N/C: Not Connected

TPS3836 and TPS3838 DBV Package
5-Pin SOT
(Top View)

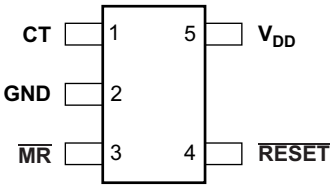

TPS3837 DBV Package
5-Pin SOT
(Top View)

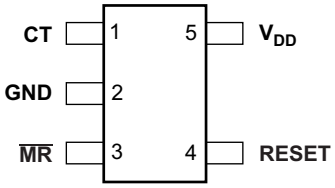

Pin Functions

PIN				I/O	DESCRIPTION
NAME	NO.				
	WSON	SOT (TPS3836, TPS3838)	SOT (TPS3837)		
CT	6	1	1	—	Capacitor Time Delay Pin. Connect this pin to GND to set reset delay time to 10 ms. Connect this pin to V_{DD} to set reset delay time to 200 ms.
GND	2	2	2	—	Ground
$\overline{MR}$	4	3	3	I	Manual Reset. When $\overline{MR}$ activates to logic low, $\overline{RESET}$/RESET activates. When $\overline{MR}$ is inactive, $\overline{RESET}$/RESET depends only on the voltage at V_{DD}. If $\overline{MR}$ is unused, connect to V_{DD} to minimize current consumption.
N/C	5	—	—	—	No Connect
$\overline{RESET}$	3	4	—	O	Active-Low Output Reset. When V_{DD} falls below V_{IT} or when $\overline{MR}$ activates to logic low, the $\overline{RESET}$ pin activates to logic low. When V_{DD} rises above V_{IT} plus V_{HYS} and $\overline{MR}$ deactivates to logic high, $\overline{RESET}$ deactivates to logic high after reset delay time t_D.
RESET	—	—	4	O	Active-High Output Reset. When V_{DD} falls below V_{IT} or when $\overline{MR}$ activates to logic low, the RESET pin activates to logic high. When V_{DD} rises above V_{IT} plus V_{HYS} and $\overline{MR}$ deactivates to logic high, RESET deactivates to logic low after reset delay time t_D.

Copyright © 2000–2019, Texas Instruments Incorporated

Pin Functions (continued)

PIN				I/O	DESCRIPTION
NAME	NO.				
	WSON	SOT (TPS3836, TPS3838)	SOT (TPS3837)		
V_{DD}	1	5	5	I	Input Supply Voltage. This device monitors the voltage at the V_{DD} pin.

7 Specifications

7.1 Absolute Maximum Ratings

over operating free-air temperature range (unless otherwise noted)[1]

		MIN	MAX	UNIT
Supply voltage	V_{DD} [2]		7	V
	All other pins[2] [3]	–0.3	7	V
Maximum low output current, I_{OL}			5	mA
Maximum high output current, I_{OH}			–5	mA
Input clamp current, I_{IK} ($V_I < 0$ or $V_I > V_{DD}$)			±10	mA
Output clamp current, I_{OK} ($V_O < 0$ or $V_O > V_{DD}$)			±10	mA
Continuous total power dissipation		See the Thermal Information table		
Operating temperature, T_A		–40	85	°C
Storage temperature, T_{stg}		–65	150	°C

(1) Stresses beyond those listed under *Absolute Maximum Ratings* may cause permanent damage to the device. These are stress ratings only, which do not imply functional operation of the device at these or any other conditions beyond those indicated under *Recommended Operating Conditions*. Exposure to absolute-maximum-rated conditions for extended periods may affect device reliability.
(2) All voltage values are with respect to GND.
(3) If RESET or $\overline{RESET}$ are pulled above V_{DD}, the internal ESD structure presents an effective 1.5-kΩ resistor between these pins, causing leakage current to flow into the RESET or $\overline{RESET}$ pin.

7.2 Dissipation Ratings

PACKAGE	T_A < +25°C POWER RATING	DERATING FACTOR ABOVE T_A = +25°C	T_A = +70°C POWER RATING	T_A = +85°C POWER RATING
DBV	437 mW	3.5 mW/°C	280 mW	227 mW
DRV Low-K[1]	715 mW	7.1 mW/°C	395 mW	285 mW
DRV High-K[2]	1540 mW	15.4 mW/°C	845 mW	615 mW

(1) The JEDEC low-K (1s) board used to derive this data was a 3in x 3in, two-layer board with 2-ounce copper traces on top of the board.
(2) The JEDEC high-K (2s2p) board used to derive this data was a 3in x 3in, multilayer board with 1-ounce internal power and ground planes and 2-ounce copper traces on the top and bottom of the board.

7.3 ESD Ratings

			VALUE	UNIT
$V_{(ESD)}$	Electrostatic discharge	Human body model (HBM), per ANSI/ESDA/JEDEC JS-001[1]	4000	V
		Charged device model (CDM), per JEDEC specification JESD22-C101[2]	1000	

(1) JEDEC document JEP155 states that 500-V HBM allows safe manufacturing with a standard ESD control process.
(2) JEDEC document JEP157 states that 250-V CDM allows safe manufacturing with a standard ESD control process.

7.4 Recommended Operating Conditions

		MIN	MAX	UNIT
Supply voltage, V_{DD}		1.6	6	V
Voltage	CT, $\overline{MR}$, RESET, and $\overline{RESET}$ pins	0	V_{DD} + 0.3	V
High-level input voltage, V_{IH}		0.7 × V_{DD}		V

Copyright © 2000–2019, Texas Instruments Incorporated

Recommended Operating Conditions (continued)

		MIN	MAX	UNIT
Low-level input voltage, V_{IL}			$0.3 \times V_{DD}$	V
Input transition rise and fall rate at $\overline{MR}$, $\Delta t/\Delta V$			100	ns/V
Operating temperature, T_A		–40	85	°C
Pullup resistor value	$\overline{RESET}$ pin (TPS3838 only)	$\frac{V_{Pullup}}{50\ \mu A}$		Ω

7.5 Thermal Information

THERMAL METRIC[1]		TPS383x		UNIT
		DRV (WSON)	DBV (SOT)	
		6 PINS	5 PINS	
$R_{\theta JA}$	Junction-to-ambient thermal resistance	84.7	153.6	°C/W
$R_{\theta JC(top)}$	Junction-to-case (top) thermal resistance	85.2	108.1	
$R_{\theta JB}$	Junction-to-board thermal resistance	49.5	33.5	
ψ_{JT}	Junction-to-top characterization parameter	2.9	10.9	
ψ_{JB}	Junction-to-board characterization parameter	48.2	33.1	
$R_{\theta JC(bot)}$	Junction-to-case (bottom) thermal resistance	30.0	n/a	

(1) For more information about traditional and new thermal metrics, see the *Semiconductor and IC Package Thermal Metrics* application report (SPRA953).

7.6 Electrical Characteristics

over recommended operating conditions (unless otherwise noted)

PARAMETER			TEST CONDITIONS	MIN	TYP	MAX	UNIT
V_{OH}	High-level output voltage	$\overline{RESET}$ (TPS3836)	V_{DD} = 3.3 V, I_{OH} = –2 mA	$0.8 \times V_{DD}$			V
			V_{DD} = 6 V, I_{OH} = –3 mA				
		RESET (TPS3837)	V_{DD} = 1.8 V, I_{OH} = –1 mA				
			V_{DD} = 3.3 V, I_{OL} = –2 mA				
V_{OL}	Low-level output voltage	$\overline{RESET}$ (TPS3836, TPS3838)	V_{DD} = 1.8 V, I_{OL} = 1 mA			0.4	V
			V_{DD} = 3.3 V, I_{OL} = 2 mA				
		RESET (TPS3837)	V_{DD} = 3.3 V, I_{OL} = 2 mA				
			V_{DD} = 6 V, I_{OL} = 3 mA				
	Power-up reset voltage[1]	TPS3836, TPS3838	V_{DD} ≥ 1.1 V, I_{OL} = 50 µA			0.2	V
		TPS3837	V_{DD} ≥ 1.1 V, I_{OL} = –50 µA	$0.8 \times V_{DD}$			V
V_{IT}	Negative-going input threshold voltage[2]	TPS383xE18	T_A = –40°C to 85°C	1.66	1.71	1.74	V
		TPS383xJ25		2.18	2.25	2.29	
		TPS383xH30		2.70	2.79	2.85	
		TPS383xL30		2.56	2.64	2.69	
		TPS383xK33		2.84	2.93	2.99	
V_{HYS}	Hysteresis at V_{DD} input		1.7 V < V_{IT} < 2.5 V		30		mV
			2.5 V < V_{IT} < 3.5 V		40		
			3.5 V < V_{IT} < 5 V		50		
I_{IH}	High-level input current	$\overline{MR}$ [3]	$\overline{MR}$ = 0.7 × V_{DD}, V_{DD} = 6 V	–40	–60	–100	µA
		CT	CT = V_{DD} = 6 V	–25		25	nA

(1) The lowest voltage at which the $\overline{RESET}$ output becomes active. t_R, V_{DD} ≥ 15 µs/V.
(2) To ensure best stability of the threshold voltage, a bypass capacitor (ceramic, 0.1 µF) should be placed near the supply terminal.
(3) If manual reset is unused, $\overline{MR}$ should be connected to V_{DD} to minimize current consumption.

Copyright © 2000–2019, Texas Instruments Incorporated

Electrical Characteristics (continued)

over recommended operating conditions (unless otherwise noted)

PARAMETER			TEST CONDITIONS	MIN	TYP	MAX	UNIT
I_{IL}	Low-level input current	$\overline{MR}$ (3)	$\overline{MR}$ = 0 V, V_{DD} = 6 V	–130	–200	–340	µA
		CT	CT = 0 V, V_{DD} = 6 V	–25		25	nA
I_{OH}	High-level output current	TPS3838	$V_{DD} = V_{IT} + 0.2$ V, $V_{OH} = V_{DD}$			25	nA
I_{DD}	Supply current		$V_{DD} > V_{IT}$, $V_{DD} < 3$ V		220	400	nA
			$V_{DD} > V_{IT}$, $V_{DD} > 3$ V		250	450	
			$V_{DD} < V_{IT}$		10	15	µA
	Internal pullup resistor at $\overline{MR}$				30		kΩ
C_I	Input capacitance at $\overline{MR}$ and CT		V_I = 0 V to V_{DD}		5		pF

7.7 Timing Requirements

At T_A = 25°C, R_L = 1 MΩ, and C_L = 50 pF, unless otherwise noted.

PARAMETER			TEST CONDITIONS	MIN	TYP	MAX	UNIT
t_W	Pulse duration	At V_{DD}	$V_{IH} = V_{IT} + 0.2$ V, $V_{IL} = V_{IT} – 0.2$ V		6		µs
		At $\overline{MR}$	$V_{DD} \geq V_{IT} + 0.2$ V, $V_{IL} = 0.3 \times V_{DD}$, $V_{IH} = 0.7 \times V_{DD}$		1		

7.8 Switching Characteristics

At T_A = 25°C, R_L = 1 MΩ, and C_L = 50 pF, unless otherwise noted.

PARAMETER			TEST CONDITIONS	MIN	TYP	MAX	UNIT
t_D	Delay time		$V_{DD} \geq V_{IT} + 0.2$ V, $\overline{MR} = 0.7 \times V_{DD}$, CT = GND, (see *Timing Diagram*)	5	10	15	ms
			$V_{DD} \geq V_{IT} + 0.2$ V, $\overline{MR} = 0.7 \times V_{DD}$, CT = V_{DD}, (see *Timing Diagram*)	100	200	300	
t_{PHL}	Propagation (delay) time, high-to-low-level output	V_{DD} to $\overline{RESET}$ delay (TPS3836, TPS3838)	$V_{IL} = V_{IT} – 0.2$ V, $V_{IH} = V_{IT} + 0.2$ V		10		µs
			V_{IL} = 1.6 V		50		
t_{PLH}	Propagation (delay) time, low-to-high-level output	V_{DD} to RESET delay (TPS3837)	$V_{IL} = V_{IT} – 0.2$ V, $V_{IH} = V_{IT} + 0.2$ V		10		µs
			V_{IL} = 1.6 V		50		
t_{PHL}	Propagation (delay) time, high-to-low-level output	$\overline{MR}$ to $\overline{RESET}$ delay (TPS3836, TPS3838)	$V_{DD} \geq V_{IT} + 0.2$ V, $V_{IL} = 0.3 \times V_{DD}$, $V_{IL} = 0.7 \times V_{DD}$		0.3		µs
t_{PLH}	Propagation (delay) time, low-to-high-level output	$\overline{MR}$ to RESET delay (TPS3837)	$V_{DD} \geq V_{IT} + 0.2$ V, $V_{IL} = 0.3 \times V_{DD}$, $V_{IL} = 0.7 \times V_{DD}$		0.3		µs

Copyright © 2000–2019, Texas Instruments Incorporated

7.9 Typical Characteristics

Test conditions are T_J = 25°C unless otherwise noted.

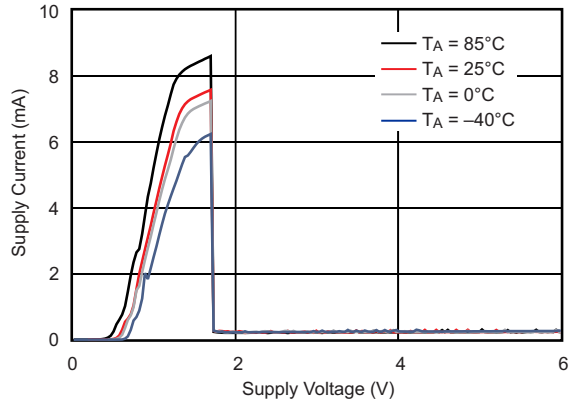

Figure 1. Supply Current vs Supply Voltage

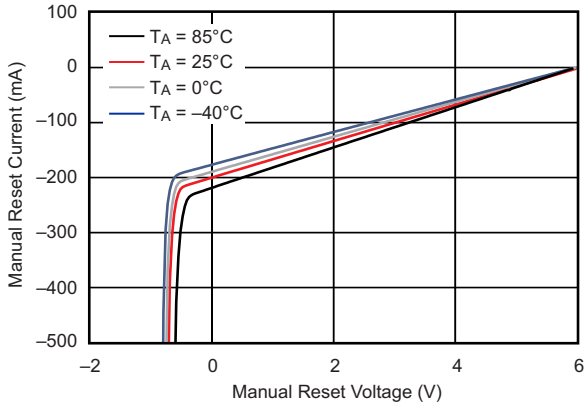

Figure 2. Manual Reset Current vs Manual Reset Voltage

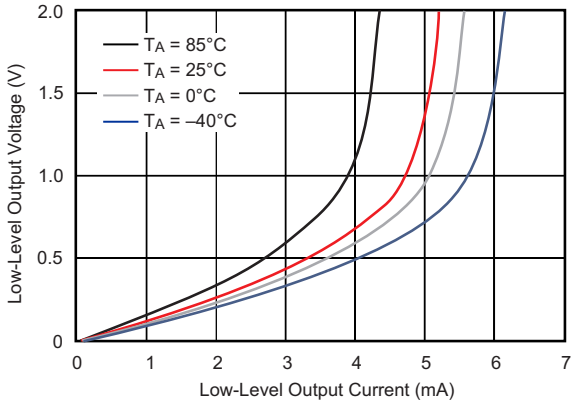

Figure 3. Low-Level Output Voltage vs Low-Level Output Current

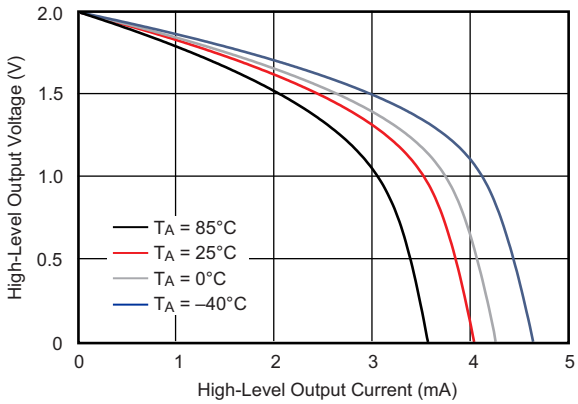

Figure 4. High-Level Output Voltage vs High-Level Output Current

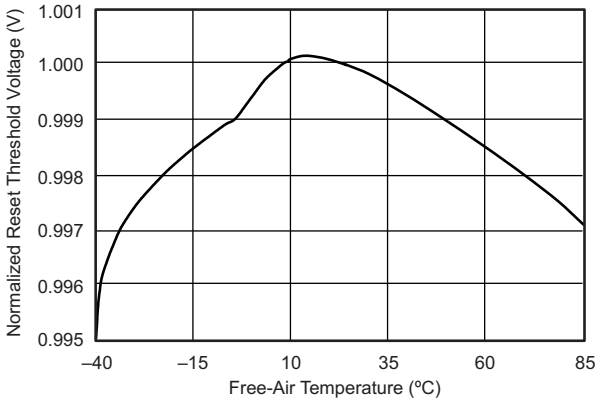

Figure 5. Normalized Reset Threshold Voltage vs Free-Air Temperature

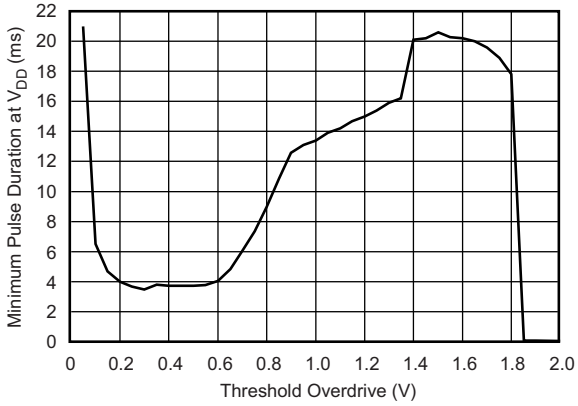

Figure 6. Minimum Pulse Duration at V_{DD} vs V_{DD} Threshold Overdrive

8 Parameter Measurement Information

8.1 Timing Diagram

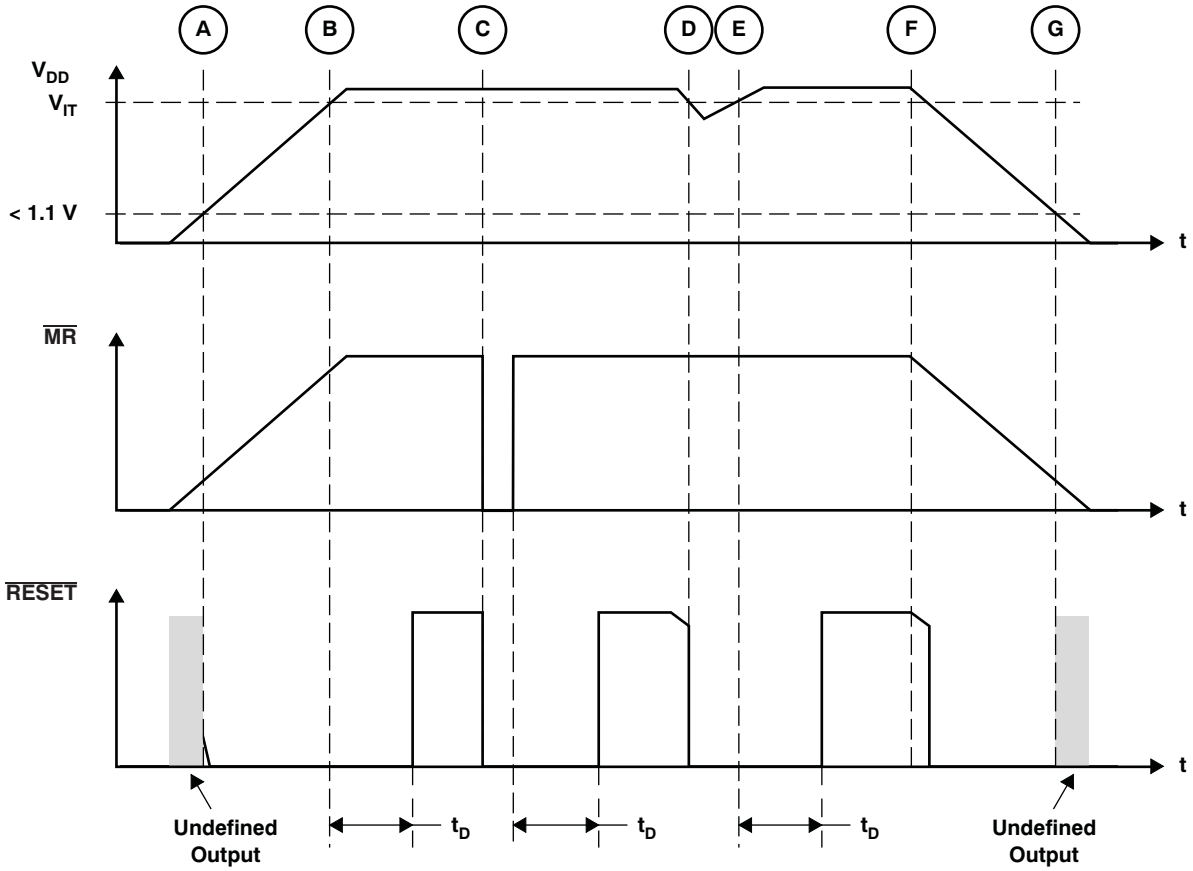

Figure 7. Timing Diagram

Copyright © 2000–2019, Texas Instruments Incorporated

9 Detailed Description

9.1 Overview

The TPS3836, TPS3837, and TPS3838 devices are a family of nano power voltage supervisors with manual reset and selectable reset delay.

9.2 Functional Block Diagram

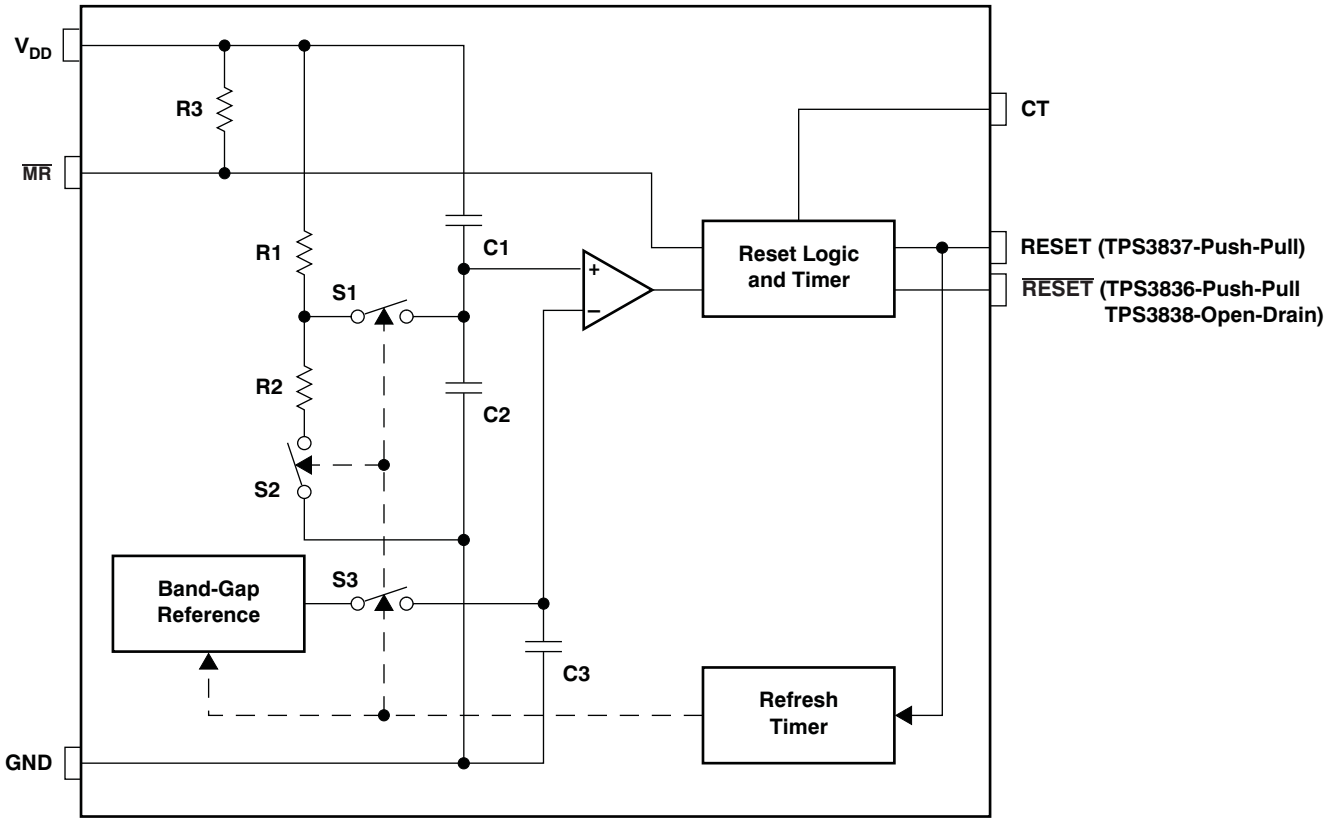

9.3 Feature Description

9.3.1 Input Voltage (V_{DD})

The V_{DD} pin monitors the input voltage with an internal comparator and when the voltage at V_{DD} falls below V_{IT}, the reset output is asserted to active state after the propagation delay time: t_{PHL} for TPS3836 and TPS3838, t_{PLH} for TPS3837. When V_{DD} rises above V_{IT} plus V_{HYS} and $\overline{MR}$ is logic high, the reset output deasserts to an inactive state after the reset delay time, t_D. Note that the V_{DD} and $\overline{MR}$ pins have different propagation delays with the same label.

9.3.2 Manual Reset ($\overline{MR}$)

Manual reset is an active-low logic input that when $\overline{MR}$ is logic low, the reset output asserts to the active state after the propagation delay: t_{PHL} for TPS3836 and TPS3838, T_{PLH} for TPS3837. Once $\overline{MR}$ is logic high and V_{DD} is above V_{IT}, the reset output deasserts to an inactive state after the reset delay time, t_D. As previously noted, the V_{DD} and $\overline{MR}$ pins have different propagation delays with the same label.

9.3.3 Selectable Reset Delay (CT)

The reset delay, t_D, can be configured to 10 ms by connecting CT to GND or 200 ms by connecting CT to V_{DD}.

Feature Description (continued)

9.3.4 Reset Output ($\overline{\text{RESET}}$ / RESET)

TPS3836 is a push-pull, active-low $\overline{\text{RESET}}$ output. The $\overline{\text{RESET}}$ output is logic high when inactive and logic low when active. This device does not require a pullup resistor.

TPS3837 is a push-pull, active-high RESET output. The RESET output is logic low when inactive and logic high when active. This device does not require a pullup resistor.

TPS3838 is an open-drain, active-low $\overline{\text{RESET}}$ output. The $\overline{\text{RESET}}$ output is logic high when inactive and logic low when active. This device does require a pullup resistor. Refer to *Recommended Operating Conditions* to determine the recommended value of the pullup resistor.

NOTE

The reset output is active when V_{DD} is below V_{IT} or $\overline{\text{MR}}$ is logic low. The reset output is inactive when V_{DD} is above V_{IT} plus V_{HYS} and $\overline{\text{MR}}$ is logic high.

9.4 Device Functional Modes

Table 1 summarized the various functional modes of the device. Logic high is represented at "H" and logic low is represented by "L". True is represented as "1" and false is represented as "0".

Table 1. Function Table

$\overline{\text{MR}}$	$V_{DD} > V_{IT}$	$\overline{\text{RESET}}$ (1)	RESET (2)
L	0	L	H
L	1	L	H
H	0	L	H
H	1	H	L

(1) TPS3836 and TPS3838.
(2) TPS3837 only.

Copyright © 2000–2019, Texas Instruments Incorporated

10 Application and Implementation

NOTE

Information in the following applications sections is not part of the TI component specification, and TI does not warrant its accuracy or completeness. TI's customers are responsible for determining suitability of components for their purposes. Customers should validate and test their design implementation to confirm system functionality.

10.1 Application Information

The following section describes a typical application for this device. This is to serve as an example only as different applications have different requirements.

10.2 Typical Application

In this application, TPS3836K33 monitors a 3.6-V Lithium-ion battery and sends a reset signal to a MCU when the battery reaches undervoltage.

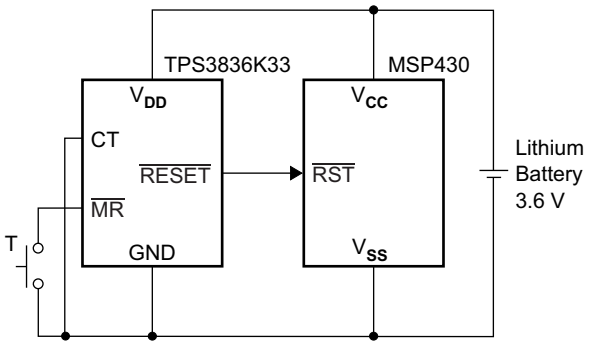

Figure 8. Typical Application Circuit

10.2.1 Design Requirements

This application monitors the 3.6-V battery and triggers a undervoltage fault to the MCU when the battery voltage falls below 3 V. The application does not release the undervoltage fault until the battery voltage is above approximately 3 V for longer than 200 ms typical. The application must not consume more than 1 µA.

10.2.2 Detailed Design Procedure

The TPS3836K33 is the correct device variant to choose since the undervoltage threshold for this variant is 2.93 V typical. This meets the undervoltage fault requirement of the application. To achieve releasing the undervoltage fault condition after the battery is above 3 V for 200 ms, connect CT to V_{DD} to select the 200-ms reset delay option. Choosing TPS3836 push-pull variant save a pullup resistor since no pullup resistor is required for the push-pull variant. These family of devices have 450-nA maximum Iq, which meets the current consumption requirement.

Typical Application (continued)

10.2.3 Application Curves

This section shows the voltage monitoring functionality. Figure 9 shows when V_{DD} drops below 2.93 V, the $\overline{RESET}$ output asserts to active low. Figure 10 shows that when the V_{DD} rises above 2.93 V + 40 mV = approximately 2.97 V for 200 ms, the $\overline{RESET}$ output deasserts to inactive logic high.

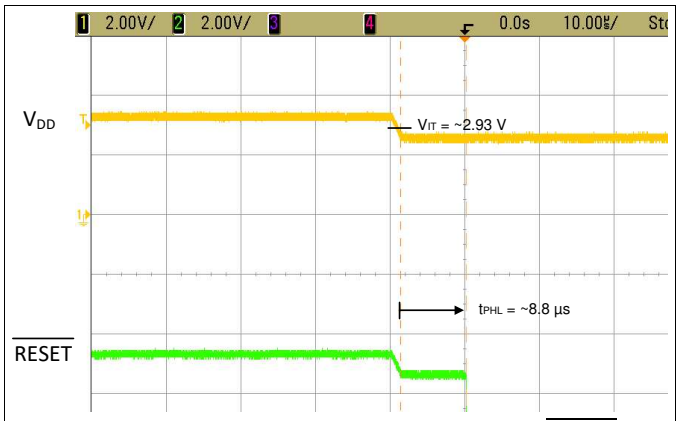

Figure 9. V_{DD} Falling Below V_{IT} Triggers a $\overline{RESET}$ Assertion After t_{PHL}

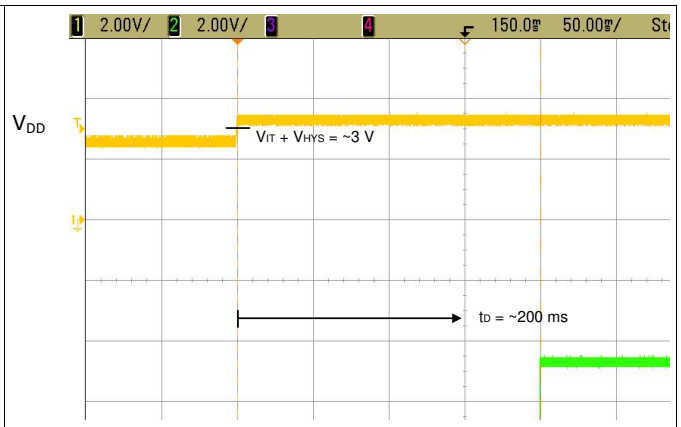

Figure 10. V_{DD} Rising Above V_{IT} + V_{HYS} for t_D Releases $\overline{RESET}$ to Inactive

Copyright © 2000–2019, Texas Instruments Incorporated

11 Power Supply Recommendations

These devices are designed to operate from an input supply with a voltage range between 1.6 V and 6 V. TI recommends an input supply capacitor between the V_{DD} pin and GND pin. This device has a 7-V absolute maximum rating on the V_{DD} pin. Take extra precautions if the voltage supply providing power to V_{DD} is susceptible to any large voltage transient that can exceed 7 V.

12 Layout

12.1 Layout Guidelines

Make sure that the connection to the V_{DD} pin is low impedance. Good analog design practice recommends placing a minimum 0.1-µF ceramic capacitor as near as possible to the V_{DD} pin to GND. If using the TPS3838 variant, be sure to follow the *Recommended Operating Conditions* to determine the pullup resistor value. Larger transients and faster slew rates on V_{DD} should use larger input capacitors. If not using $\overline{MR}$, tie to V_{DD} to reduce current consumption.

12.2 Layout Example

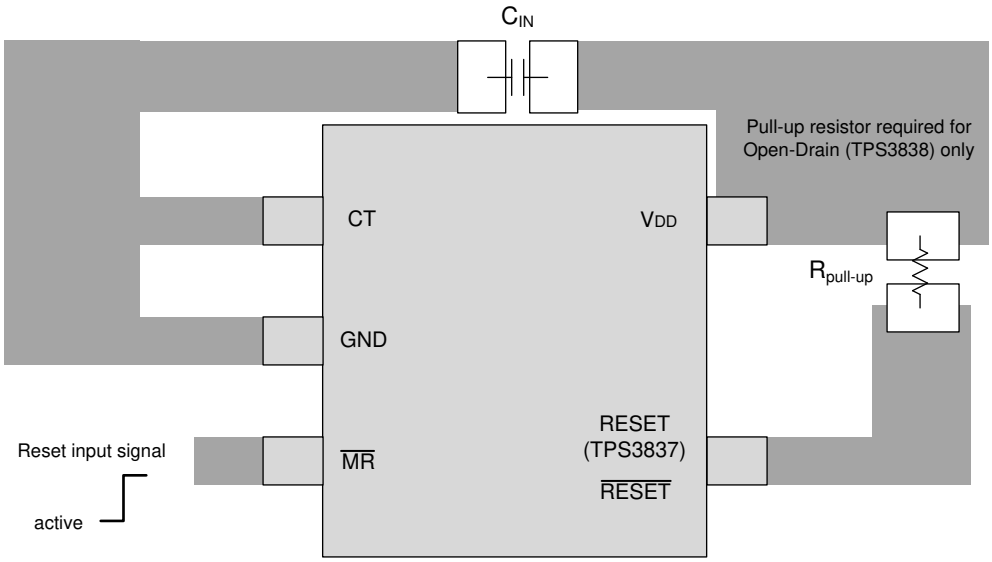

Figure 11. TPS3836, TPS3837, and TPS3838 Typical Layout

13 Device and Documentation Support

13.1 Related Links

The table below lists quick access links. Categories include technical documents, support and community resources, tools and software, and quick access to order now.

Table 2. Related Links

PARTS	PRODUCT FOLDER	ORDER NOW	TECHNICAL DOCUMENTS	TOOLS & SOFTWARE	SUPPORT & COMMUNITY
TPS3836	Click here	Click here	Click here	Click here	Click here
TPS3837	Click here	Click here	Click here	Click here	Click here
TPS3838	Click here	Click here	Click here	Click here	Click here

13.2 Receiving Notification of Documentation Updates

To receive notification of documentation updates, navigate to the device product folder on ti.com. In the upper right corner, click on *Alert me* to register and receive a weekly digest of any product information that has changed. For change details, review the revision history included in any revised document.

13.3 Support Resources

TI E2E™ support forums are an engineer's go-to source for fast, verified answers and design help — straight from the experts. Search existing answers or ask your own question to get the quick design help you need.

Linked content is provided "AS IS" by the respective contributors. They do not constitute TI specifications and do not necessarily reflect TI's views; see TI's Terms of Use.

13.4 Trademarks

MSP430, E2E are trademarks of Texas Instruments.
All other trademarks are the property of their respective owners.

13.5 Electrostatic Discharge Caution

This integrated circuit can be damaged by ESD. Texas Instruments recommends that all integrated circuits be handled with appropriate precautions. Failure to observe proper handling and installation procedures can cause damage.

ESD damage can range from subtle performance degradation to complete device failure. Precision integrated circuits may be more susceptible to damage because very small parametric changes could cause the device not to meet its published specifications.

13.6 Glossary

SLYZ022 — *TI Glossary*.

This glossary lists and explains terms, acronyms, and definitions.

14 Mechanical, Packaging, and Orderable Information

The following pages include mechanical, packaging, and orderable information. This information is the most current data available for the designated devices. This data is subject to change without notice and revision of this document. For browser-based versions of this data sheet, refer to the left-hand navigation.

Copyright © 2000–2019, Texas Instruments Incorporated

PACKAGING INFORMATION

Orderable Device	Status (1)	Package Type	Package Drawing	Pins	Package Qty	Eco Plan (2)	Lead finish/ Ball material (6)	MSL Peak Temp (3)	Op Temp (°C)	Device Marking (4/5)	Samples
TPS3836E18DBVR	ACTIVE	SOT-23	DBV	5	3000	RoHS & Green	NIPDAU	Level-1-260C-UNLIM	-40 to 85	PDNI	Samples
TPS3836E18DBVT	ACTIVE	SOT-23	DBV	5	250	RoHS & Green	NIPDAU	Level-1-260C-UNLIM	-40 to 85	PDNI	Samples
TPS3836E18DBVTG4	ACTIVE	SOT-23	DBV	5	250	RoHS & Green	NIPDAU	Level-1-260C-UNLIM	-40 to 85	PDNI	Samples
TPS3836H30DBVR	ACTIVE	SOT-23	DBV	5	3000	RoHS & Green	NIPDAU	Level-1-260C-UNLIM	-40 to 85	PHRI	Samples
TPS3836H30DBVT	ACTIVE	SOT-23	DBV	5	250	RoHS & Green	NIPDAU	Level-1-260C-UNLIM	-40 to 85	PHRI	Samples
TPS3836J25DBVR	ACTIVE	SOT-23	DBV	5	3000	RoHS & Green	NIPDAU	Level-1-260C-UNLIM	-40 to 85	PDSI	Samples
TPS3836J25DBVT	ACTIVE	SOT-23	DBV	5	250	RoHS & Green	NIPDAU	Level-1-260C-UNLIM	-40 to 85	PDSI	Samples
TPS3836K33DBVR	ACTIVE	SOT-23	DBV	5	3000	RoHS & Green	NIPDAU	Level-1-260C-UNLIM	-40 to 85	PDTI	Samples
TPS3836K33DBVRG4	ACTIVE	SOT-23	DBV	5	3000	RoHS & Green	NIPDAU	Level-1-260C-UNLIM	-40 to 85	PDTI	Samples
TPS3836K33DBVT	ACTIVE	SOT-23	DBV	5	250	RoHS & Green	NIPDAU	Level-1-260C-UNLIM	-40 to 85	PDTI	Samples
TPS3836K33DBVTG4	ACTIVE	SOT-23	DBV	5	250	RoHS & Green	NIPDAU	Level-1-260C-UNLIM	-40 to 85	PDTI	Samples
TPS3836L30DBVR	ACTIVE	SOT-23	DBV	5	3000	RoHS & Green	NIPDAU	Level-1-260C-UNLIM	-40 to 85	PCAI	Samples
TPS3836L30DBVRG4	ACTIVE	SOT-23	DBV	5	3000	RoHS & Green	NIPDAU	Level-1-260C-UNLIM	-40 to 85	PCAI	Samples
TPS3836L30DBVT	ACTIVE	SOT-23	DBV	5	250	RoHS & Green	NIPDAU	Level-1-260C-UNLIM	-40 to 85	PCAI	Samples
TPS3836L30DBVTG4	ACTIVE	SOT-23	DBV	5	250	RoHS & Green	NIPDAU	Level-1-260C-UNLIM	-40 to 85	PCAI	Samples
TPS3837E18DBVT	ACTIVE	SOT-23	DBV	5	250	RoHS & Green	NIPDAU	Level-1-260C-UNLIM	-40 to 85	PDOI	Samples
TPS3837E18DBVTG4	ACTIVE	SOT-23	DBV	5	250	RoHS & Green	NIPDAU	Level-1-260C-UNLIM	-40 to 85	PDOI	Samples
TPS3837J25DBVR	ACTIVE	SOT-23	DBV	5	3000	RoHS & Green	NIPDAU	Level-1-260C-UNLIM	-40 to 85	PDRI	Samples
TPS3837J25DBVT	ACTIVE	SOT-23	DBV	5	250	RoHS & Green	NIPDAU	Level-1-260C-UNLIM	-40 to 85	PDRI	Samples
TPS3837K33DBVR	ACTIVE	SOT-23	DBV	5	3000	RoHS & Green	NIPDAU	Level-1-260C-UNLIM	-40 to 85	PDUI	Samples

Orderable Device	Status (1)	Package Type	Package Drawing	Pins	Package Qty	Eco Plan (2)	Lead finish/ Ball material (6)	MSL Peak Temp (3)	Op Temp (°C)	Device Marking (4/5)	Samples
TPS3837K33DBVT	ACTIVE	SOT-23	DBV	5	250	RoHS & Green	NIPDAU	Level-1-260C-UNLIM	-40 to 85	PDUI	Samples
TPS3837K33DBVTG4	ACTIVE	SOT-23	DBV	5	250	RoHS & Green	NIPDAU	Level-1-260C-UNLIM	-40 to 85	PDUI	Samples
TPS3837L30DBVR	ACTIVE	SOT-23	DBV	5	3000	RoHS & Green	NIPDAU	Level-1-260C-UNLIM	-40 to 85	PCBI	Samples
TPS3837L30DBVT	ACTIVE	SOT-23	DBV	5	250	RoHS & Green	NIPDAU	Level-1-260C-UNLIM	-40 to 85	PCBI	Samples
TPS3837L30DBVTG4	ACTIVE	SOT-23	DBV	5	250	RoHS & Green	NIPDAU	Level-1-260C-UNLIM	-40 to 85	PCBI	Samples
TPS3838E18DBVR	ACTIVE	SOT-23	DBV	5	3000	RoHS & Green	NIPDAU	Level-1-260C-UNLIM	-40 to 85	PDQI	Samples
TPS3838E18DBVRG4	ACTIVE	SOT-23	DBV	5	3000	RoHS & Green	NIPDAU	Level-1-260C-UNLIM	-40 to 85	PDQI	Samples
TPS3838E18DBVT	ACTIVE	SOT-23	DBV	5	250	RoHS & Green	NIPDAU	Level-1-260C-UNLIM	-40 to 85	PDQI	Samples
TPS3838E18DBVTG4	ACTIVE	SOT-23	DBV	5	250	RoHS & Green	NIPDAU	Level-1-260C-UNLIM	-40 to 85	PDQI	Samples
TPS3838J25DBVR	ACTIVE	SOT-23	DBV	5	3000	RoHS & Green	NIPDAU	Level-1-260C-UNLIM	-40 to 85	PDPI	Samples
TPS3838J25DBVRG4	ACTIVE	SOT-23	DBV	5	3000	RoHS & Green	NIPDAU	Level-1-260C-UNLIM	-40 to 85	PDPI	Samples
TPS3838J25DBVT	ACTIVE	SOT-23	DBV	5	250	RoHS & Green	NIPDAU	Level-1-260C-UNLIM	-40 to 85	PDPI	Samples
TPS3838J25DBVTG4	ACTIVE	SOT-23	DBV	5	250	RoHS & Green	NIPDAU	Level-1-260C-UNLIM	-40 to 85	PDPI	Samples
TPS3838K33DBVR	ACTIVE	SOT-23	DBV	5	3000	RoHS & Green	NIPDAU	Level-1-260C-UNLIM	-40 to 85	PDVI	Samples
TPS3838K33DBVRG4	ACTIVE	SOT-23	DBV	5	3000	RoHS & Green	NIPDAU	Level-1-260C-UNLIM	-40 to 85	PDVI	Samples
TPS3838K33DBVT	ACTIVE	SOT-23	DBV	5	250	RoHS & Green	NIPDAU	Level-1-260C-UNLIM	-40 to 85	PDVI	Samples
TPS3838K33DBVTG4	ACTIVE	SOT-23	DBV	5	250	RoHS & Green	NIPDAU	Level-1-260C-UNLIM	-40 to 85	PDVI	Samples
TPS3838K33DRVR	ACTIVE	WSON	DRV	6	3000	RoHS & Green	NIPDAUAG	Level-1-260C-UNLIM	-40 to 85	CCS	Samples
TPS3838K33DRVT	ACTIVE	WSON	DRV	6	250	RoHS & Green	NIPDAUAG	Level-1-260C-UNLIM	-40 to 85	CCS	Samples
TPS3838L30DBVR	ACTIVE	SOT-23	DBV	5	3000	RoHS & Green	NIPDAU	Level-1-260C-UNLIM	-40 to 85	PCCI	Samples
TPS3838L30DBVRG4	ACTIVE	SOT-23	DBV	5	3000	RoHS & Green	NIPDAU	Level-1-260C-UNLIM	-40 to 85	PCCI	Samples

Orderable Device	Status (1)	Package Type	Package Drawing	Pins	Package Qty	Eco Plan (2)	Lead finish/ Ball material (6)	MSL Peak Temp (3)	Op Temp (°C)	Device Marking (4/5)	Samples
TPS3838L30DBVT	ACTIVE	SOT-23	DBV	5	250	RoHS & Green	NIPDAU	Level-1-260C-UNLIM	-40 to 85	PCCI	Samples
TPS3838L30DBVTG4	ACTIVE	SOT-23	DBV	5	250	RoHS & Green	NIPDAU	Level-1-260C-UNLIM	-40 to 85	PCCI	Samples

(1) The marketing status values are defined as follows:
ACTIVE: Product device recommended for new designs.
LIFEBUY: TI has announced that the device will be discontinued, and a lifetime-buy period is in effect.
NRND: Not recommended for new designs. Device is in production to support existing customers, but TI does not recommend using this part in a new design.
PREVIEW: Device has been announced but is not in production. Samples may or may not be available.
OBSOLETE: TI has discontinued the production of the device.

(2) **RoHS:** TI defines "RoHS" to mean semiconductor products that are compliant with the current EU RoHS requirements for all 10 RoHS substances, including the requirement that RoHS substance do not exceed 0.1% by weight in homogeneous materials. Where designed to be soldered at high temperatures, "RoHS" products are suitable for use in specified lead-free processes. TI may reference these types of products as "Pb-Free".
RoHS Exempt: TI defines "RoHS Exempt" to mean products that contain lead but are compliant with EU RoHS pursuant to a specific EU RoHS exemption.
Green: TI defines "Green" to mean the content of Chlorine (Cl) and Bromine (Br) based flame retardants meet JS709B low halogen requirements of <=1000ppm threshold. Antimony trioxide based flame retardants must also meet the <=1000ppm threshold requirement.

(3) MSL, Peak Temp. - The Moisture Sensitivity Level rating according to the JEDEC industry standard classifications, and peak solder temperature.

(4) There may be additional marking, which relates to the logo, the lot trace code information, or the environmental category on the device.

(5) Multiple Device Markings will be inside parentheses. Only one Device Marking contained in parentheses and separated by a "~" will appear on a device. If a line is indented then it is a continuation of the previous line and the two combined represent the entire Device Marking for that device.

(6) Lead finish/Ball material - Orderable Devices may have multiple material finish options. Finish options are separated by a vertical ruled line. Lead finish/Ball material values may wrap to two lines if the finish value exceeds the maximum column width.

Important Information and Disclaimer: The information provided on this page represents TI's knowledge and belief as of the date that it is provided. TI bases its knowledge and belief on information provided by third parties, and makes no representation or warranty as to the accuracy of such information. Efforts are underway to better integrate information from third parties. TI has taken and continues to take reasonable steps to provide representative and accurate information but may not have conducted destructive testing or chemical analysis on incoming materials and chemicals. TI and TI suppliers consider certain information to be proprietary, and thus CAS numbers and other limited information may not be available for release.

In no event shall TI's liability arising out of such information exceed the total purchase price of the TI part(s) at issue in this document sold by TI to Customer on an annual basis.

OTHER QUALIFIED VERSIONS OF TPS3836, TPS3838 :

- Automotive : TPS3836-Q1, TPS3838-Q1
- Enhanced Product : TPS3836-EP

NOTE: Qualified Version Definitions:

- Automotive - Q100 devices qualified for high-reliability automotive applications targeting zero defects
- Enhanced Product - Supports Defense, Aerospace and Medical Applications

TAPE AND REEL INFORMATION

REEL DIMENSIONS

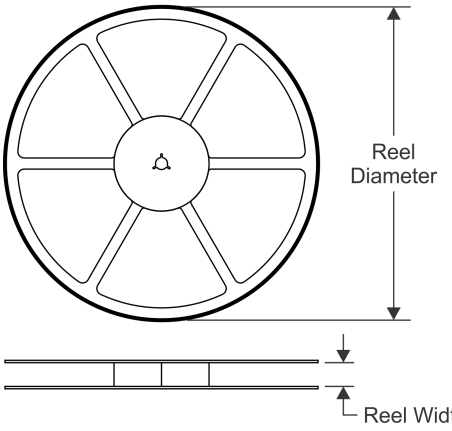

TAPE DIMENSIONS

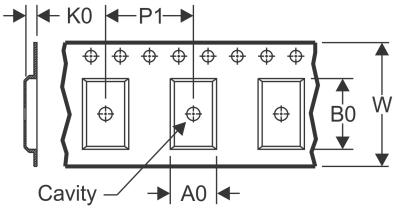

A0	Dimension designed to accommodate the component width
B0	Dimension designed to accommodate the component length
K0	Dimension designed to accommodate the component thickness
W	Overall width of the carrier tape
P1	Pitch between successive cavity centers

QUADRANT ASSIGNMENTS FOR PIN 1 ORIENTATION IN TAPE

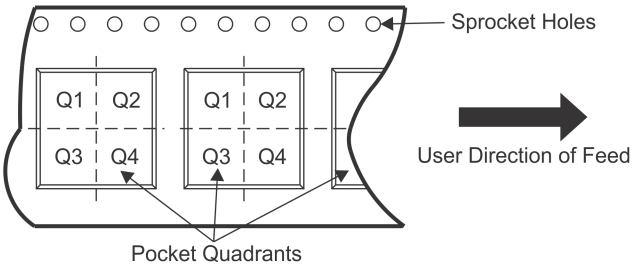

*All dimensions are nominal

Device	Package Type	Package Drawing	Pins	SPQ	Reel Diameter (mm)	Reel Width W1 (mm)	A0 (mm)	B0 (mm)	K0 (mm)	P1 (mm)	W (mm)	Pin1 Quadrant
TPS3836E18DBVR	SOT-23	DBV	5	3000	178.0	9.0	3.23	3.17	1.37	4.0	8.0	Q3
TPS3836E18DBVT	SOT-23	DBV	5	250	178.0	9.0	3.23	3.17	1.37	4.0	8.0	Q3
TPS3836H30DBVR	SOT-23	DBV	5	3000	178.0	9.0	3.23	3.17	1.37	4.0	8.0	Q3
TPS3836H30DBVT	SOT-23	DBV	5	250	178.0	9.0	3.23	3.17	1.37	4.0	8.0	Q3
TPS3836J25DBVR	SOT-23	DBV	5	3000	178.0	9.0	3.23	3.17	1.37	4.0	8.0	Q3
TPS3836J25DBVT	SOT-23	DBV	5	250	178.0	9.0	3.23	3.17	1.37	4.0	8.0	Q3
TPS3836K33DBVR	SOT-23	DBV	5	3000	178.0	9.0	3.23	3.17	1.37	4.0	8.0	Q3
TPS3836K33DBVT	SOT-23	DBV	5	250	178.0	9.0	3.23	3.17	1.37	4.0	8.0	Q3
TPS3836L30DBVR	SOT-23	DBV	5	3000	178.0	9.0	3.3	3.2	1.4	4.0	8.0	Q3
TPS3836L30DBVT	SOT-23	DBV	5	250	178.0	9.0	3.23	3.17	1.37	4.0	8.0	Q3
TPS3837E18DBVT	SOT-23	DBV	5	250	179.0	8.4	3.2	3.2	1.4	4.0	8.0	Q3
TPS3837J25DBVR	SOT-23	DBV	5	3000	178.0	9.0	3.23	3.17	1.37	4.0	8.0	Q3
TPS3837J25DBVT	SOT-23	DBV	5	250	178.0	9.0	3.3	3.2	1.4	4.0	8.0	Q3
TPS3837K33DBVR	SOT-23	DBV	5	3000	178.0	9.0	3.23	3.17	1.37	4.0	8.0	Q3
TPS3837K33DBVT	SOT-23	DBV	5	250	178.0	9.0	3.23	3.17	1.37	4.0	8.0	Q3
TPS3837L30DBVR	SOT-23	DBV	5	3000	178.0	9.0	3.23	3.17	1.37	4.0	8.0	Q3
TPS3837L30DBVT	SOT-23	DBV	5	250	178.0	9.0	3.23	3.17	1.37	4.0	8.0	Q3
TPS3838E18DBVR	SOT-23	DBV	5	3000	179.0	8.4	3.2	3.2	1.4	4.0	8.0	Q3

Device	Package Type	Package Drawing	Pins	SPQ	Reel Diameter (mm)	Reel Width W1 (mm)	A0 (mm)	B0 (mm)	K0 (mm)	P1 (mm)	W (mm)	Pin1 Quadrant
TPS3838E18DBVT	SOT-23	DBV	5	250	179.0	8.4	3.2	3.2	1.4	4.0	8.0	Q3
TPS3838J25DBVR	SOT-23	DBV	5	3000	180.0	8.4	3.2	3.2	1.4	4.0	8.0	Q3
TPS3838J25DBVR	SOT-23	DBV	5	3000	178.0	9.0	3.23	3.17	1.37	4.0	8.0	Q3
TPS3838J25DBVT	SOT-23	DBV	5	250	178.0	9.0	3.23	3.17	1.37	4.0	8.0	Q3
TPS3838J25DBVT	SOT-23	DBV	5	250	179.0	8.4	3.2	3.2	1.4	4.0	8.0	Q3
TPS3838K33DBVR	SOT-23	DBV	5	3000	178.0	9.0	3.23	3.17	1.37	4.0	8.0	Q3
TPS3838K33DBVR	SOT-23	DBV	5	3000	180.0	8.4	3.2	3.2	1.4	4.0	8.0	Q3
TPS3838K33DBVT	SOT-23	DBV	5	250	178.0	9.0	3.23	3.17	1.37	4.0	8.0	Q3
TPS3838K33DBVT	SOT-23	DBV	5	250	180.0	8.4	3.2	3.2	1.4	4.0	8.0	Q3
TPS3838K33DRVR	WSON	DRV	6	3000	179.0	8.4	2.2	2.2	1.2	4.0	8.0	Q2
TPS3838K33DRVT	WSON	DRV	6	250	179.0	8.4	2.2	2.2	1.2	4.0	8.0	Q2
TPS3838L30DBVR	SOT-23	DBV	5	3000	180.0	8.4	3.2	3.2	1.4	4.0	8.0	Q3
TPS3838L30DBVR	SOT-23	DBV	5	3000	178.0	9.0	3.3	3.2	1.4	4.0	8.0	Q3
TPS3838L30DBVT	SOT-23	DBV	5	250	180.0	8.4	3.2	3.2	1.4	4.0	8.0	Q3
TPS3838L30DBVT	SOT-23	DBV	5	250	178.0	9.0	3.23	3.17	1.37	4.0	8.0	Q3

TAPE AND REEL BOX DIMENSIONS

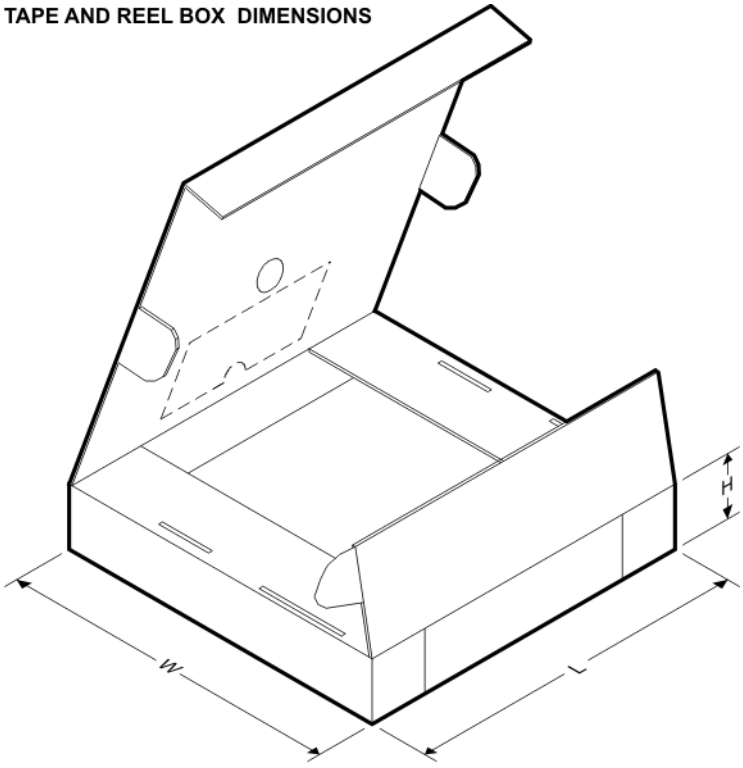

*All dimensions are nominal

Device	Package Type	Package Drawing	Pins	SPQ	Length (mm)	Width (mm)	Height (mm)
TPS3836E18DBVR	SOT-23	DBV	5	3000	180.0	180.0	18.0
TPS3836E18DBVT	SOT-23	DBV	5	250	180.0	180.0	18.0

Device	Package Type	Package Drawing	Pins	SPQ	Length (mm)	Width (mm)	Height (mm)
TPS3836H30DBVR	SOT-23	DBV	5	3000	180.0	180.0	18.0
TPS3836H30DBVT	SOT-23	DBV	5	250	180.0	180.0	18.0
TPS3836J25DBVR	SOT-23	DBV	5	3000	180.0	180.0	18.0
TPS3836J25DBVT	SOT-23	DBV	5	250	180.0	180.0	18.0
TPS3836K33DBVR	SOT-23	DBV	5	3000	180.0	180.0	18.0
TPS3836K33DBVT	SOT-23	DBV	5	250	180.0	180.0	18.0
TPS3836L30DBVR	SOT-23	DBV	5	3000	180.0	180.0	18.0
TPS3836L30DBVT	SOT-23	DBV	5	250	180.0	180.0	18.0
TPS3837E18DBVT	SOT-23	DBV	5	250	200.0	183.0	25.0
TPS3837J25DBVR	SOT-23	DBV	5	3000	180.0	180.0	18.0
TPS3837J25DBVT	SOT-23	DBV	5	250	180.0	180.0	18.0
TPS3837K33DBVR	SOT-23	DBV	5	3000	180.0	180.0	18.0
TPS3837K33DBVT	SOT-23	DBV	5	250	180.0	180.0	18.0
TPS3837L30DBVR	SOT-23	DBV	5	3000	180.0	180.0	18.0
TPS3837L30DBVT	SOT-23	DBV	5	250	180.0	180.0	18.0
TPS3838E18DBVR	SOT-23	DBV	5	3000	200.0	183.0	25.0
TPS3838E18DBVT	SOT-23	DBV	5	250	200.0	183.0	25.0
TPS3838J25DBVR	SOT-23	DBV	5	3000	200.0	183.0	25.0
TPS3838J25DBVR	SOT-23	DBV	5	3000	180.0	180.0	18.0
TPS3838J25DBVT	SOT-23	DBV	5	250	180.0	180.0	18.0
TPS3838J25DBVT	SOT-23	DBV	5	250	203.0	203.0	35.0
TPS3838K33DBVR	SOT-23	DBV	5	3000	180.0	180.0	18.0
TPS3838K33DBVR	SOT-23	DBV	5	3000	200.0	183.0	25.0
TPS3838K33DBVT	SOT-23	DBV	5	250	180.0	180.0	18.0
TPS3838K33DBVT	SOT-23	DBV	5	250	200.0	183.0	25.0
TPS3838K33DRVR	WSON	DRV	6	3000	200.0	183.0	25.0
TPS3838K33DRVT	WSON	DRV	6	250	200.0	183.0	25.0
TPS3838L30DBVR	SOT-23	DBV	5	3000	200.0	183.0	25.0
TPS3838L30DBVR	SOT-23	DBV	5	3000	180.0	180.0	18.0
TPS3838L30DBVT	SOT-23	DBV	5	250	200.0	183.0	25.0
TPS3838L30DBVT	SOT-23	DBV	5	250	180.0	180.0	18.0

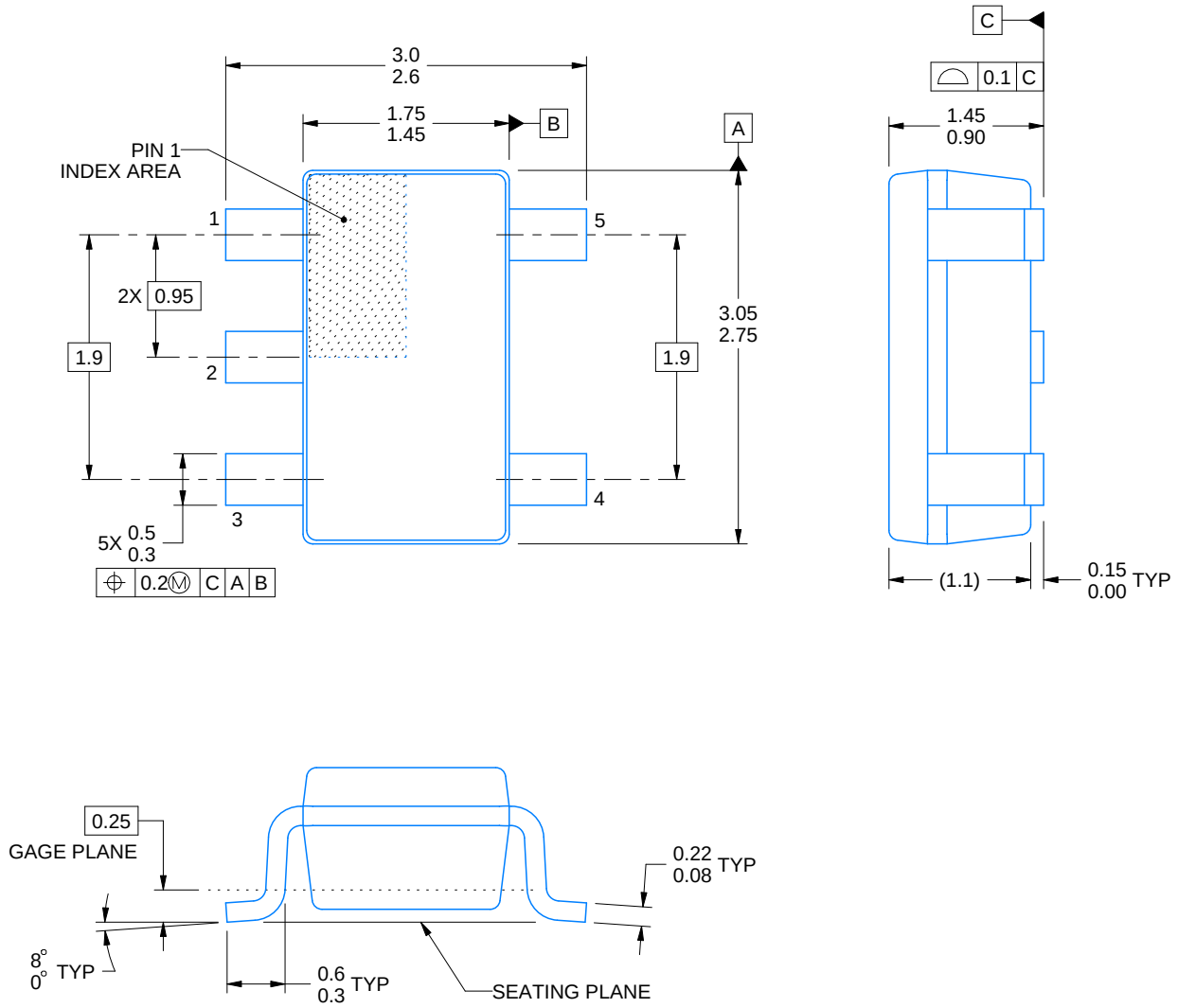

4214839/F 06/2021

NOTES:

1. All linear dimensions are in millimeters. Any dimensions in parenthesis are for reference only. Dimensioning and tolerancing per ASME Y14.5M.
2. This drawing is subject to change without notice.
3. Refernce JEDEC MO-178.
4. Body dimensions do not include mold flash, protrusions, or gate burrs. Mold flash, protrusions, or gate burrs shall not exceed 0.25 mm per side.

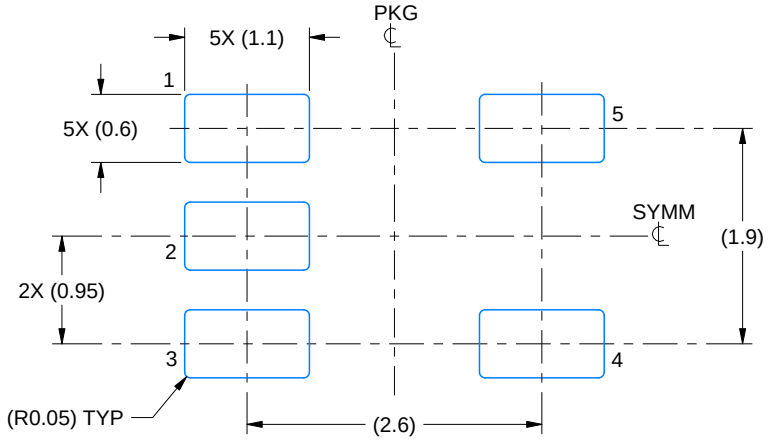

LAND PATTERN EXAMPLE
EXPOSED METAL SHOWN
SCALE:15X

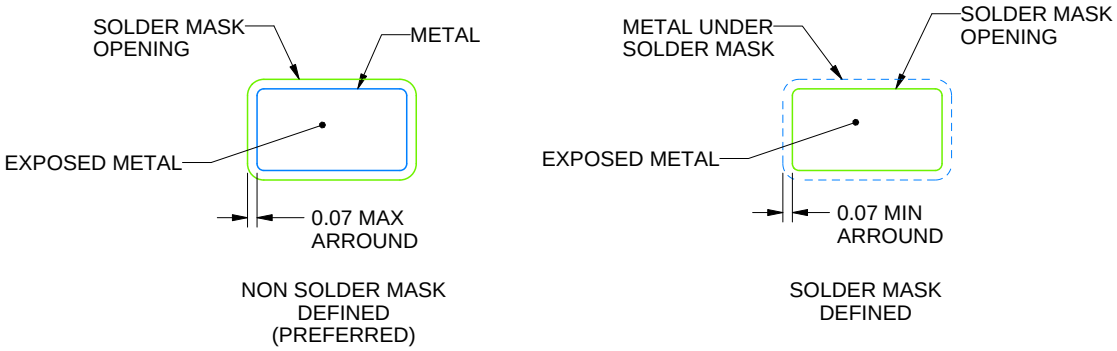

SOLDER MASK DETAILS

4214839/F 06/2021

NOTES: (continued)

5. Publication IPC-7351 may have alternate designs.
6. Solder mask tolerances between and around signal pads can vary based on board fabrication site.

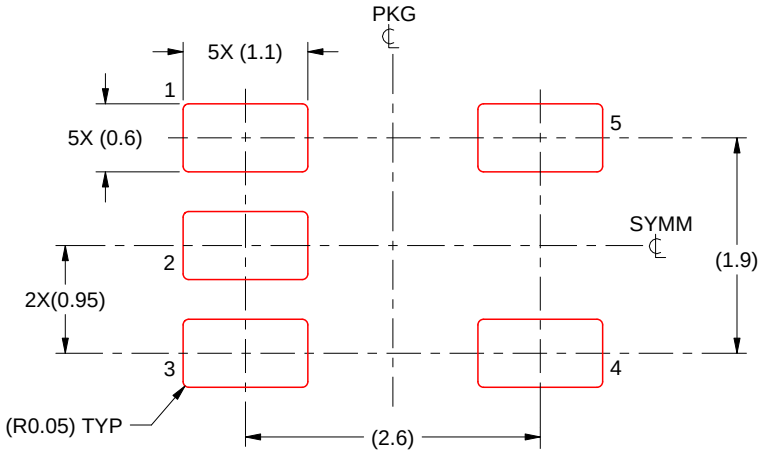

SOLDER PASTE EXAMPLE
BASED ON 0.125 mm THICK STENCIL
SCALE:15X

4214839/F 06/2021

NOTES: (continued)

7. Laser cutting apertures with trapezoidal walls and rounded corners may offer better paste release. IPC-7525 may have alternate design recommendations.
8. Board assembly site may have different recommendations for stencil design.

DRV 6 WSON - 0.8 mm max height

PLASTIC SMALL OUTLINE - NO LEAD

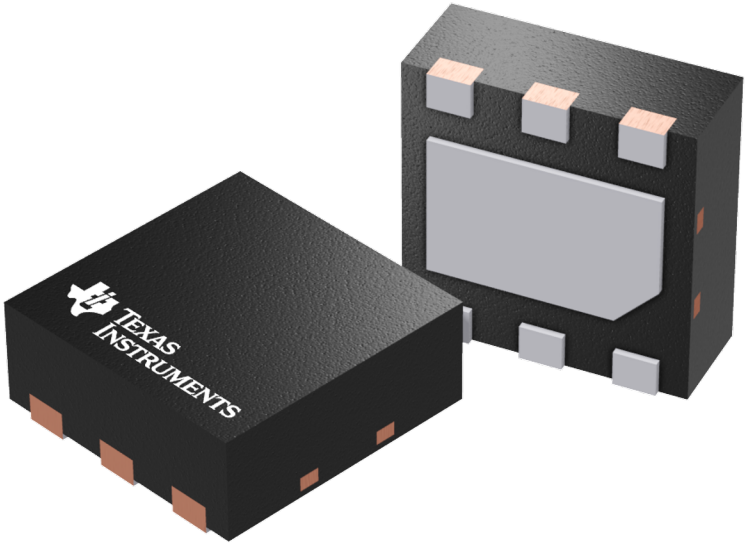

Images above are just a representation of the package family, actual package may vary.
Refer to the product data sheet for package details.

TEXAS INSTRUMENTS

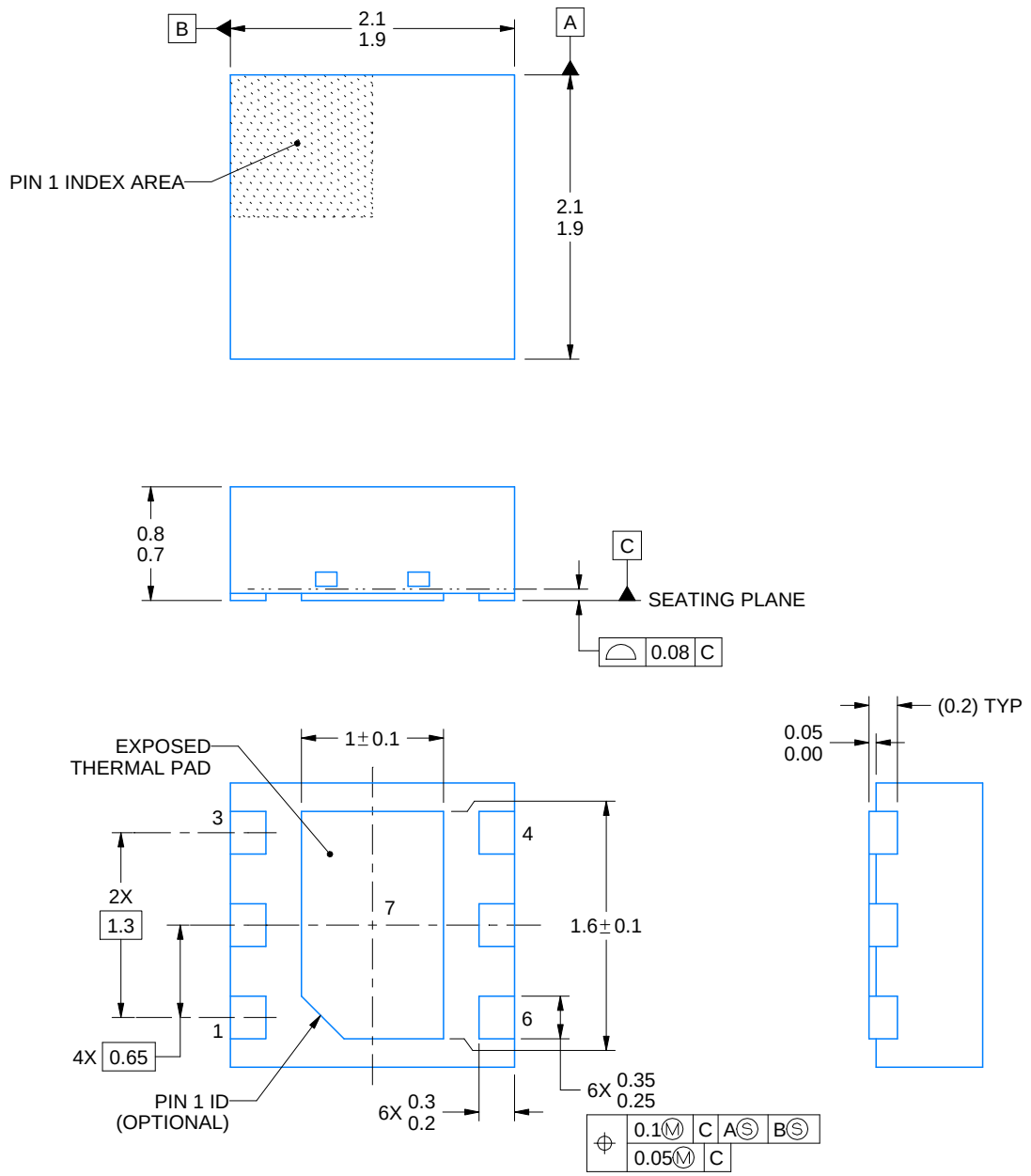

NOTES:

1. All linear dimensions are in millimeters. Any dimensions in parenthesis are for reference only. Dimensioning and tolerancing per ASME Y14.5M.
2. This drawing is subject to change without notice.
3. The package thermal pad must be soldered to the printed circuit board for thermal and mechanical performance.

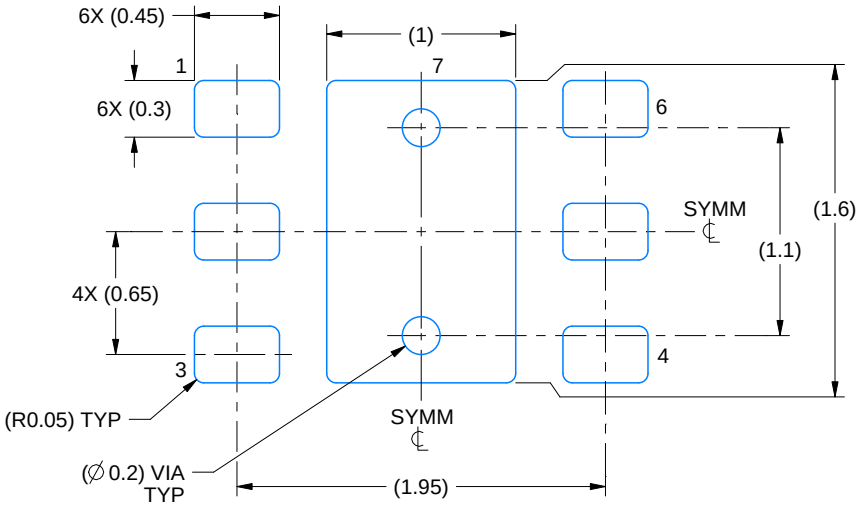

LAND PATTERN EXAMPLE
SCALE:25X

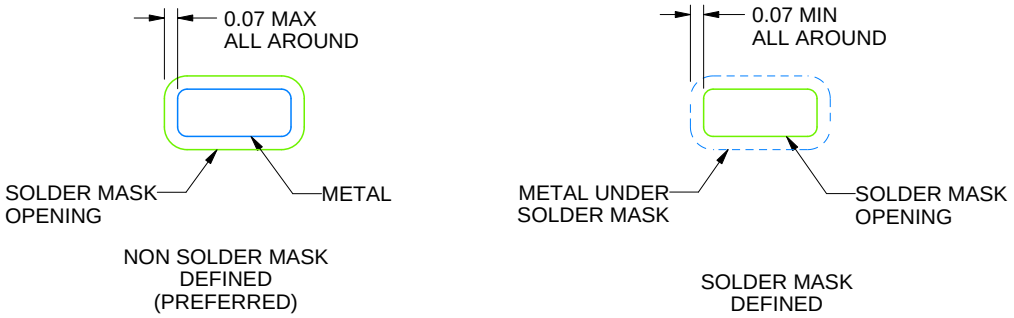

SOLDER MASK DETAILS

4222173/B 04/2018

NOTES: (continued)

4. This package is designed to be soldered to a thermal pad on the board. For more information, see Texas Instruments literature number SLUA271 (www.ti.com/lit/slua271).
5. Vias are optional depending on application, refer to device data sheet. If some or all are implemented, recommended via locations are shown.

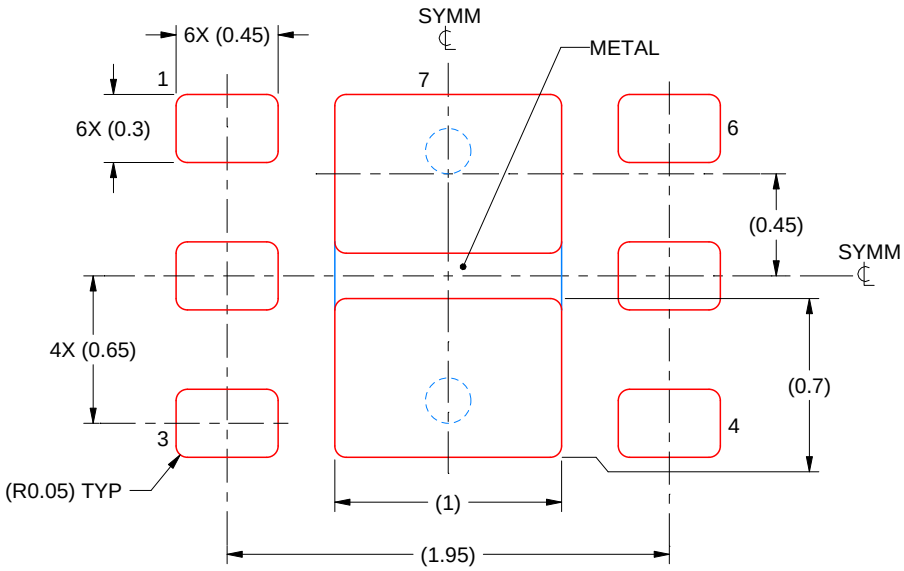

SOLDER PASTE EXAMPLE
BASED ON 0.125 mm THICK STENCIL

EXPOSED PAD #7
88% PRINTED SOLDER COVERAGE BY AREA UNDER PACKAGE
SCALE:30X

4222173/B 04/2018

NOTES: (continued)

6. Laser cutting apertures with trapezoidal walls and rounded corners may offer better paste release. IPC-7525 may have alternate design recommendations.

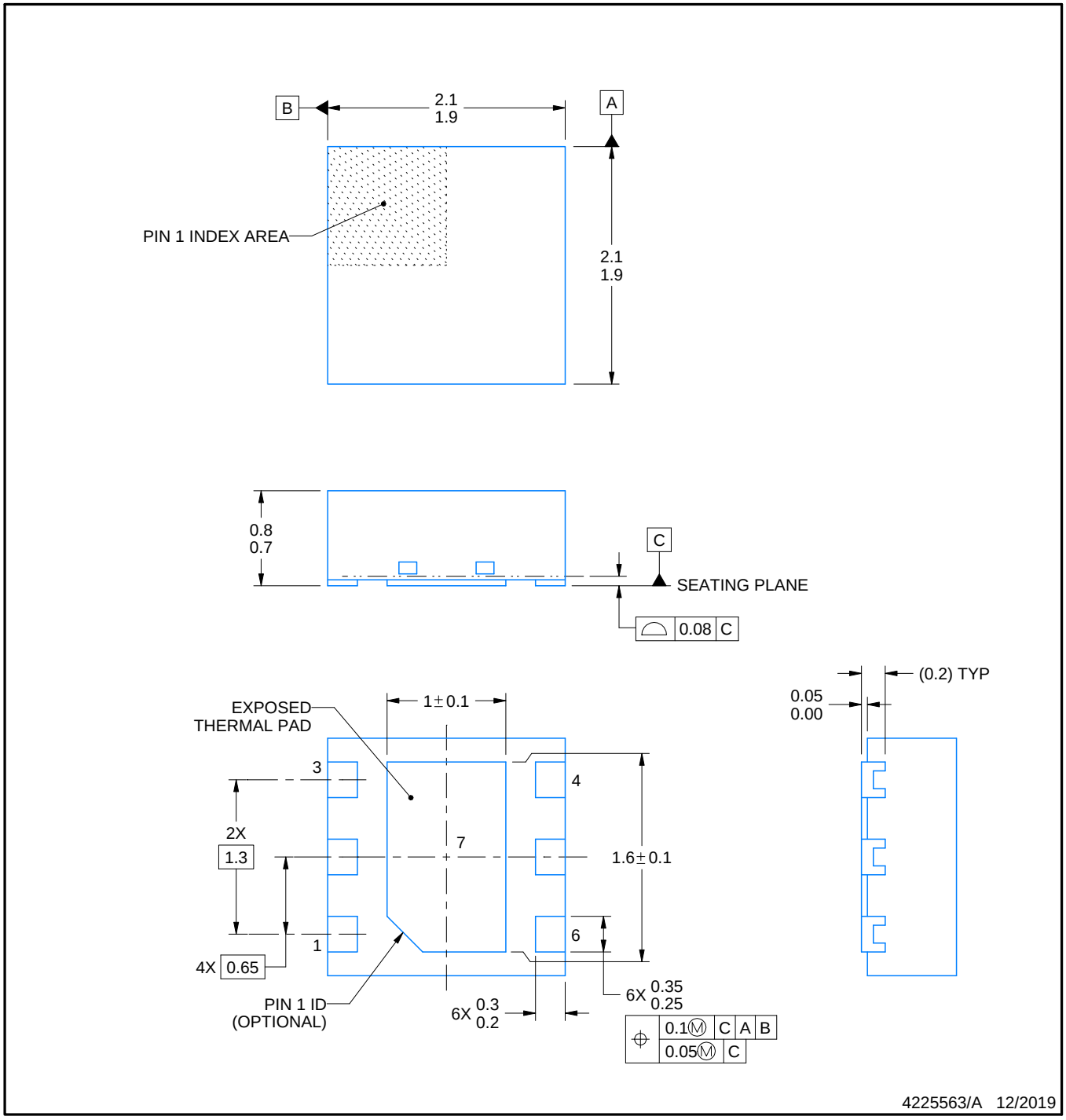

NOTES:

1. All linear dimensions are in millimeters. Any dimensions in parenthesis are for reference only. Dimensioning and tolerancing per ASME Y14.5M.
2. This drawing is subject to change without notice.
3. The package thermal pad must be soldered to the printed circuit board for thermal and mechanical performance.

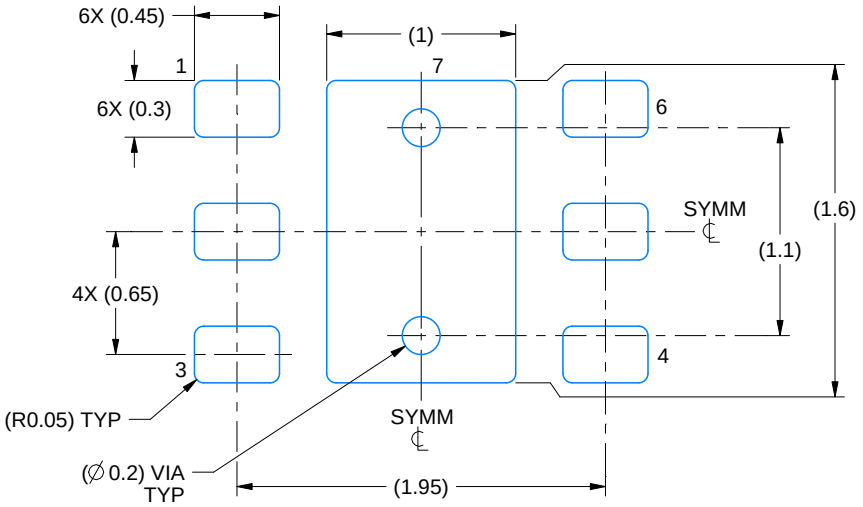

LAND PATTERN EXAMPLE
EXPOSED METAL SHOWN
SCALE:25X

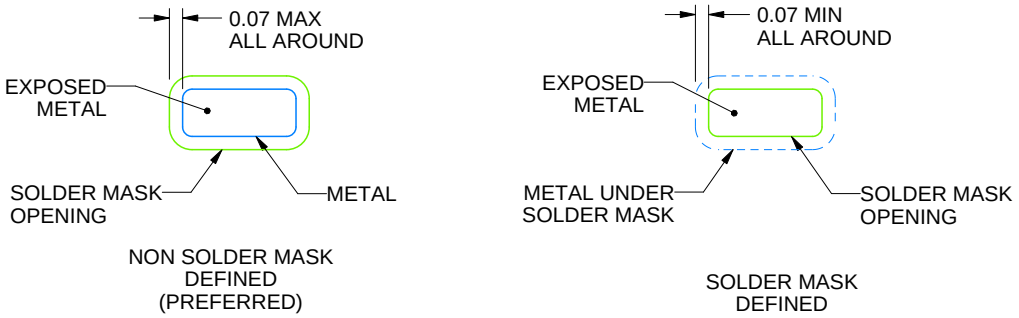

SOLDER MASK DETAILS

4225563/A 12/2019

NOTES: (continued)

4. This package is designed to be soldered to a thermal pad on the board. For more information, see Texas Instruments literature number SLUA271 (www.ti.com/lit/slua271).
5. Vias are optional depending on application, refer to device data sheet. If some or all are implemented, recommended via locations are shown.

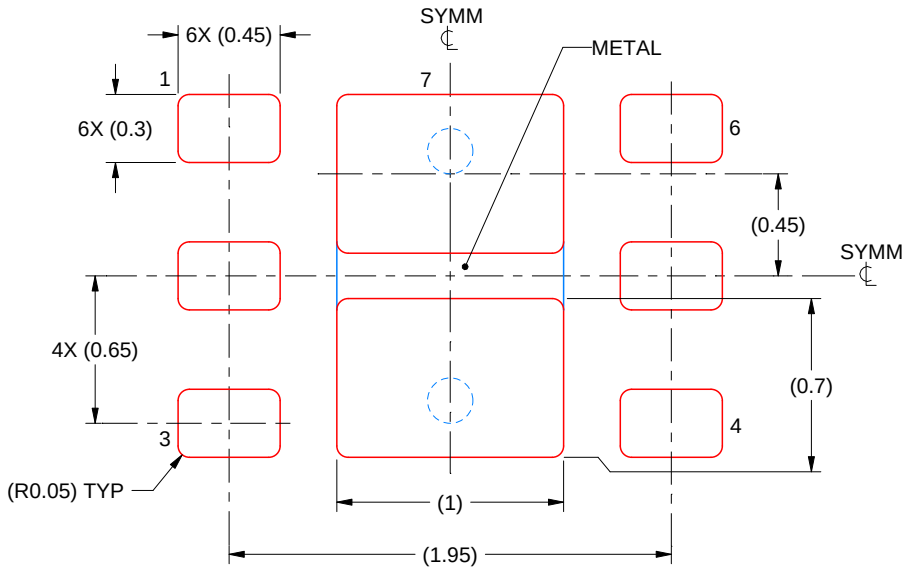

SOLDER PASTE EXAMPLE
BASED ON 0.125 mm THICK STENCIL

EXPOSED PAD #7
88% PRINTED SOLDER COVERAGE BY AREA UNDER PACKAGE
SCALE:30X

4225563/A 12/2019

NOTES: (continued)

6. Laser cutting apertures with trapezoidal walls and rounded corners may offer better paste release. IPC-7525 may have alternate design recommendations.

IMPORTANT NOTICE AND DISCLAIMER

TI PROVIDES TECHNICAL AND RELIABILITY DATA (INCLUDING DATASHEETS), DESIGN RESOURCES (INCLUDING REFERENCE DESIGNS), APPLICATION OR OTHER DESIGN ADVICE, WEB TOOLS, SAFETY INFORMATION, AND OTHER RESOURCES “AS IS” AND WITH ALL FAULTS, AND DISCLAIMS ALL WARRANTIES, EXPRESS AND IMPLIED, INCLUDING WITHOUT LIMITATION ANY IMPLIED WARRANTIES OF MERCHANTABILITY, FITNESS FOR A PARTICULAR PURPOSE OR NON-INFRINGEMENT OF THIRD PARTY INTELLECTUAL PROPERTY RIGHTS.

These resources are intended for skilled developers designing with TI products. You are solely responsible for (1) selecting the appropriate TI products for your application, (2) designing, validating and testing your application, and (3) ensuring your application meets applicable standards, and any other safety, security, or other requirements. These resources are subject to change without notice. TI grants you permission to use these resources only for development of an application that uses the TI products described in the resource. Other reproduction and display of these resources is prohibited. No license is granted to any other TI intellectual property right or to any third party intellectual property right. TI disclaims responsibility for, and you will fully indemnify TI and its representatives against, any claims, damages, costs, losses, and liabilities arising out of your use of these resources.

TI’s products are provided subject to TI’s Terms of Sale (https:www.ti.com/legal/termsofsale.html) or other applicable terms available either on ti.com or provided in conjunction with such TI products. TI’s provision of these resources does not expand or otherwise alter TI’s applicable warranties or warranty disclaimers for TI products.

Mailing Address: Texas Instruments, Post Office Box 655303, Dallas, Texas 75265
Copyright © 2021, Texas Instruments Incorporated