具有 PGOOD 的 TPS53015 4.5V 至 28V 输入、D-CAP2™ 同步降压转换器

1 特性

- D-CAP2™模式控制
  - 快速瞬态响应
  - 无需外部组件即可实现环路补偿
  - 与陶瓷输出电容器兼容
- 高初始基准精度 (±1%)
- 宽输入电压范围：4.5V 至 28V
- 输出电压：0.77V 至 7V
- 低侧 $R_{DS(on)}$ 无损电流检测
- 固定软启动时间：1.4ms
- 非灌电流预偏置软启动
- 开关频率：500kHz
- 逐周期过流限制控制
- 自动跳跃 Eco-Mode™确保在轻载时保持高效率
- 电源正常状态输出
- OCL/OVP/UVP/UVLO/TSD 保护
- 带有集成式升压 PMOS 开关的自适应栅极驱动器
- 热补偿 OCP，4000ppm/°C
- 10 引脚 VSSOP

2 应用

- 用于多种应用的低功率系统负载点 调节
  - 数字电视电源
  - 网络家庭终端设备
  - 数字机顶盒 (STB)
  - DVD 播放器 / 录像机
  - 游戏机和其他

3 说明

TPS53015 器件是一款单通道、自适应导通时间 D-CAP2 ™模式同步降压控制器。该器件使系统设计人员能够以经济高效、低外部组件数和低待机电流的解决方案来完善包含各种终端设备电源总线稳压器的套件。TPS53015 的主控制环路采用 D-CAP2 模式控制，无需外部补偿组件即可实现极快的瞬态响应。自适应接通时间控制功能可支持较高负载条件下的 PWM 模式与轻负载下的 Eco-mode™运行模式间的无缝转换。Eco-mode 运行模式使该器件能够在较轻负载条件下保持高效率。该器件也能适应低等效串联电阻 (ESR) 输出电容器（例如 POSCAP 或 SP-CAP）和超低 ESR 陶瓷电容器。该器件具有 4.5V 至 28V 的输入电压和 0.77V 至 7V 的输出电压，可实现便捷高效运行。

TPS53015 采用 3mm × 3mm 10 引脚 VSSOP (DGS) 封装，额定环境温度范围为 –40°C 至 85°C。

器件信息(1)

器件型号	封装	封装尺寸（标称值）
TPS53015	DGS (10)	3.00mm × 3.00mm

(1) 如需了解所有可用封装，请参阅数据表书末尾的可订购产品附录。

简化应用

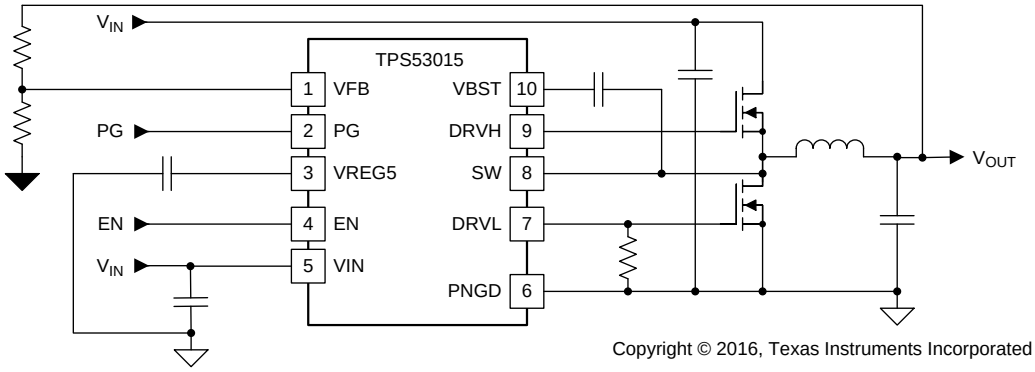

Copyright © 2016, Texas Instruments Incorporated

本文档旨在为方便起见，提供有关 TI 产品中文版本的信息，以确认产品的概要。 有关适用的官方英文版本的最新信息，请访问 www.ti.com，其内容始终优先。 TI 不保证翻译的准确性和有效性。 在实际设计之前，请务必参考最新版本的英文版本。

目录

1 特性 ... 1
2 应用 ... 1
3 说明 ... 1
4 修订历史记录 ... 2
5 **Pin Configuration and Functions** ... 3
6 **Specifications** ... 4
6.1 Absolute Maximum Ratings ... 4
6.2 ESD Ratings ... 4
6.3 Recommended Operating Conditions ... 4
6.4 Thermal Information ... 4
6.5 Electrical Characteristics ... 6
6.6 Typical Characteristics ... 8
7 **Detailed Description** ... 13
7.1 Overview ... 13
7.2 Functional Block Diagram ... 13
7.3 Feature Description ... 13
7.4 Device Functional Modes ... 15
8 **Application and Implementation** ... 16
8.1 Application Information ... 16
8.2 Typical Application ... 17
9 **Power Supply Recommendations** ... 20
10 **Layout** ... 20
10.1 Layout Guidelines ... 20
10.2 Layout Example ... 21
11 器件和文档支持 ... 22
11.1 商标 ... 22
11.2 静电放电警告 ... 22
11.3 术语表 ... 22
12 机械、封装和可订购信息 ... 22

4 修订历史记录

Changes from Revision B (August 2012) to Revision C — **Page**

- 按照最新的 TI 文档标准进行更新 ... 1

Changes from Revision A (July 2012) to Revision B — **Page**

- 已更改 将“可调软启动”更改为“1.4ms 固定软启动”（ 特性 列表中） ... 1
- 已添加 向 特性 列表中添加“电源正常状态输出” ... 1
- 已更改 将文献编号从修订版 A 更改为修订版 B ... 1
- Changed from "SS" to "PG" in the Absolute Maximum Ratings table ... 4
- Changed from "SS" to "PG" in the Recommended Operating Conditions table ... 4
- Changed T_{SS} spec from "1.0 ms" to "1.4 ms" Typical ... 6
- Changed T_{PGDLY} spec from "1.5 ms" to "1.2 ms" ... 6
- Changed $T_{PGCOMPSS}$ spec from "2.2 ms" to "2.3 ms" ... 6
- Changed MIN t_{UVPEN} specification from "1.4 ms" to "1.7 ms" ... 7
- Changed TYP t_{UVPEN} specification from "1.7 ms" to "2.2 ms" ... 7
- Changed MAX t_{UVPEN} specification from "2.0 ms" to "2.7 ms" ... 7
- Changed soft-start time from "1.0 ms" to "1.4 ms" in ... 14
- Changed adjusted reference to UVP delay timing from "1.7 ms" to "2.2 ms" in the section ... 14
- Added section describing POWER GOOD operation ... 15

Changes from Original (July 2012) to Revision A — **Page**

Copyright © 2012–2019, Texas Instruments Incorporated

5 Pin Configuration and Functions

DGS Package
10-Pin VSSOP
Top View

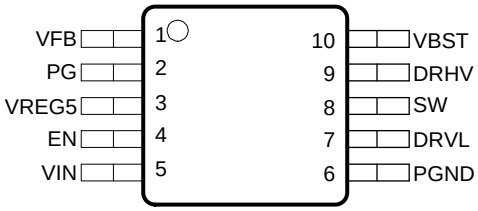

Pin Functions

PIN		I/O (1)	DESCRIPTION
NAME	NO.		
DRVH	9	O	High-side N-channel MOSFET gate driver output. SW referenced driver switches between SW(OFF) and VBST(ON).
DRVL	7	O	Low-side N-Channel MOSFET gate driver output. PGND referenced driver switches between PGND(OFF) and VREG5(ON).
EN	4	I	Enable. Pull high to enable converter.
PG	2	O	Open drain power good output.
PGND	6	I	System ground.
SW	8	I/O	Switch node connections for both the high-side driver and overcurrent comparator.
VBST	10	I	High-side MOSFET gate driver bootstrap voltage input. Connect a capacitor from VBST to SW. An internal diode is connected between VREG5 and VBST
VFB	1	I	D-CAP2 feedback input. Connect to output voltage with resistor divider.
VIN	5	I	Supply Input for 5-V linear regulator. Bypass to GND with a minimum 0.1-μF high quality ceramic capacitor.
VREG5	3	O	Output of 5-V linear regulator and supply for MOSFET driver. Bypass to GND with a minimum 4.7-μF high-quality ceramic capacitor. VREG5 is active when EN is asserted high.

(1) I = input, O = output

Copyright © 2012–2019, Texas Instruments Incorporated

6 Specifications

6.1 Absolute Maximum Ratings

over operating free-air temperature range (unless otherwise noted)[1][2]

		MIN	MAX	UNIT
Input voltage range	VIN, EN, SW	–0.3	30	V
	VBST	–0.3	36	
	(VBST - SW), VFB	–0.3	6	
	SW (10 ns transient)	–3.0	30	
Output voltage range	DRVH	–2	36	V
	DRVH - SW	–0.3	6	
	DRVL, VREG5, PG	–0.3	6	
	PGND	–0.3	0.3	
Junction temperature range, T_J		–40	150	°C
Storage temperature, T_{stg}		–55	150	°C

(1) Stresses beyond those listed under *Absolute Maximum Ratings* may cause permanent damage to the device. These are stress ratings only, which do not imply functional operation of the device at these or any other conditions beyond those indicated under *Recommended Operating Conditions*. Exposure to absolute-maximum-rated conditions for extended periods may affect device reliability.
(2) All voltages are with respect to device GND terminal.

6.2 ESD Ratings

			VALUE	UNIT
$V_{(ESD)}$	Electrostatic discharge	Human-body model (HBM), per ANSI/ESDA/JEDEC JS-001[1]	±2000	V
		Charged-device model (CDM), per JEDEC specification JESD22-C101[2]	±500	

(1) JEDEC document JEP155 states that 500-V HBM allows safe manufacturing with a standard ESD control process.
(2) JEDEC document JEP157 states that 250-V CDM allows safe manufacturing with a standard ESD control process.

6.3 Recommended Operating Conditions

over operating free-air temperature range (unless otherwise noted)

		MIN	MAX	UNIT
Supply input voltage range	VIN	4.5	28	V
Input voltage range	VBST	–0.1	33.5	V
	VBST - SW	–0.1	5.5	
	VFB	–0.1	5.5	
	EN	–0.1	28	
	SW	–1.0	28	
Output Voltage range	DRVH	–1.0	33.5	V
	DRVH - SW	–0.1	5.5	
	DRVL, VREG5, PG	–0.1	5.5	
	PGND	–0.1	0.1	
Operating free-air temperature, T_A		–40	85	°C
Operating junction temperature, T_J		–40	125	°C

6.4 Thermal Information

THERMAL METRIC[1]		TPS53015 DGS (VSSOP) 10 PINS	UNIT
$R_{\theta JA}$	Junction-to-ambient thermal resistance	109.6	°C/W
$R_{\theta JC(top)}$	Junction-to-case (top) thermal resistance	31.2	°C/W

(1) For more information about traditional and new thermal metrics, see the *Semiconductor and IC Package Thermal Metrics* application report, SPRA953.

Copyright © 2012–2019, Texas Instruments Incorporated

Thermal Information (continued)

THERMAL METRIC[1]		TPS53015 DGS (VSSOP) 10 PINS	UNIT
$R_{\theta JB}$	Junction-to-board thermal resistance	54.7	°C/W
ψ_{JT}	Junction-to-top characterization parameter	0.9	°C/W
ψ_{JB}	Junction-to-board characterization parameter	54.1	°C/W

Copyright © 2012–2019, Texas Instruments Incorporated

6.5 Electrical Characteristics

over operating free-air temperature range, V_{IN} = 12 V(unless otherwise noted)

PARAMETER		CONDITIONS	MIN	TYP	MAX	UNIT
SUPPLY CURRENT						
I_{IN}	Supply current	VIN current, EN = 5 V, V_{VFB} = 0.8 V, V_{SW} = 0 V, T_A = 25°C		660		µA
I_{VINSDN}	Shutdown current	VIN current, T_A = 25°C, No Load , V_{EN} = 0V, VREG5 = OFF		6.0		µA
VFB VOLTAGE and DISCHARGE RESISTANCE						
V_{VFBTHL}	Threshold voltage	V_{OUT} = 1.05 V, T_A = 25°C	765.3	773.0	780.7	mV
TC_{VFB}	Temperature coefficient (1)	T_A = 25°C	–140		140	ppm/°C
I_{VFB}	Input current	VFB = 0.8V, T_A = 25°C	–150	-10	100	nA
VREG5 OUTPUT						
V_{VREG5}	Output voltage	T_A=25°C, 6 V < V_{IN} < 28 V, I_{VREG5} = 5 mA		5.1		V
I_{VREG5}	Output current	V_{VIN} = 5.5 V, V_{VREG5} = 4.0 V, T_A = 25°C		120		mA
OUTPUT: N-CHANNEL MOSFET GATE DRIVERS						
R_{DRVH}	Resistance	Source, I_{DRVH} = –50 mA, T_A = 25°C		3.2	4.7	Ω
		Sink, I_{DRVH} = 50 mA, T_A = 25°C		1.4	2.4	
R_{DRVL}	Resistance	Source, I_{DRVL} = –50 mA, T_A = 25°C		6.9	8.2	Ω
		Sink, I_{DRVL} = 50 mA, T_A = 25°C		0.8	1.7	
t_D	Dead-time(1)	DRVH-low to DRVL-on		15		ns
		DRVL-low to DRVH-on		20		
INTERNAL BOOST DIODE						
V_{FBST}	Forward voltage	$V_{VREG5-VBST}$, I_F = 10 mA, T_A = 25°C		0.1	0.2	V
SOFT-START TIME						
t_{ss}	Internal soft-start time			1.4		ms
POWER GOOD						
V_{PGTH}	PGOOD threshold	PGOOD LOW		84		%
		PGOOD HIGH		116		%
I_{PG}	PGOOD sink current	V_{PG} = 0.5 V		5		mA
t_{PGDLY}	PGOOD delay time	Delay for PGOOD in		1.2		ms
		Delay for PGOOD out		2		µs
$t_{PGCOMPSS}$	PGODD comparator start-up delay	PGOOD comparator wake up delay		2.3		ms
UVLO						
$V_{UVVREG5}$	VREG5 UVLO threshold	VREG5 Rising		4.0		V
		Hysteresis		0.3		
LOGIC THRESHOLD						
V_{ENH}	High-level threshold voltage		1.6			V
V_{ENL}	Low-level threshold voltage				0.5	V
R_{EN}	EN pin resistance to GND	V_{EN} = 12 V	225	450	900	kΩ
CURRENT SENSE						
I_{TRIP}	Source current	V_{DRVL} = 0.1 V, T_A = 25°C	14.3	15	15.8	µA
TC_{VTRIP}	V_{TRIP} Temperature coefficient	Relative to T_A = 25°C		4000		ppm/°C
V_{OCL}	Current limit threshold	R_{TRIP} = 75 kΩ, T_A = 25°C	234	336	424	mV
		R_{TRIP} = 27 kΩ, T_A = 25°C	121	174	220	
		R_{TRIP} = 6.8 kΩ, T_A = 25°C	35	50	63	

(1) Ensured by design. Not production tested.

Copyright © 2012–2019, Texas Instruments Incorporated

Electrical Characteristics (continued)

over operating free-air temperature range, V_{IN} = 12 V(unless otherwise noted)

PARAMETER		CONDITIONS	MIN	TYP	MAX	UNIT
ON-TIME TIMER CONTROL						
t_{ON}	On-time[1]	V_{OUT} = 1.05 V		250		ns
$t_{OFF(min)}$	Minimum off-time	V_{IN} = 4.5 V, V_{VFB} = 0.7 V, T_A = 25°C		230		ns
OUTPUT UNDERVOLTAGE AND OVERVOLTAGE PROTECTION						
V_{OVP}	Output OVP trip threshold	OVP detect voltage	115%	120%	125%	
t_{OVPDEL}	Output OVP propagation delay				10	µs
V_{UVP}	Output UVP trip threshold	UVP detect voltage	63%	68%	73%	
t_{UVPDEL}	Output UVP delay			1		ms
t_{UVPEN}	Output UVP enable delay		1.7	2.2	2.7	ms
THERMAL SHUTDOWN						
T_{SDN}	Thermal shutdown threshold	Shutdown temperature[1]		150		°C
		Hysteresis[1]		25		

6.6 Typical Characteristics

V_{IN} = 12 V, T_A= 25°C (unless otherwise noted)

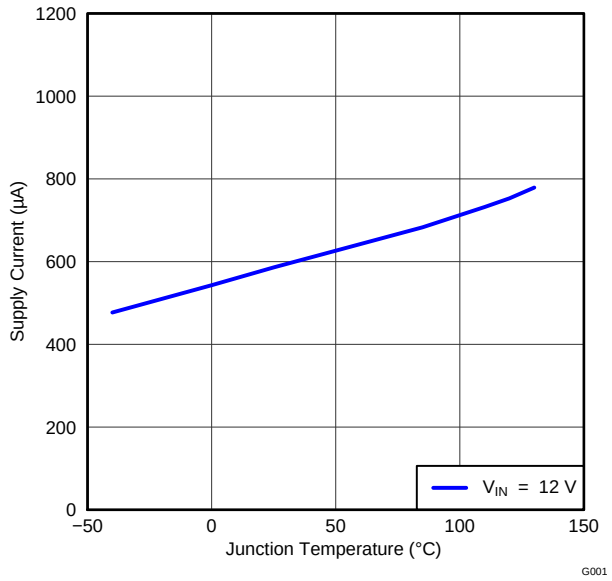

Figure 1. VIN Supply Current vs Junction Temperature

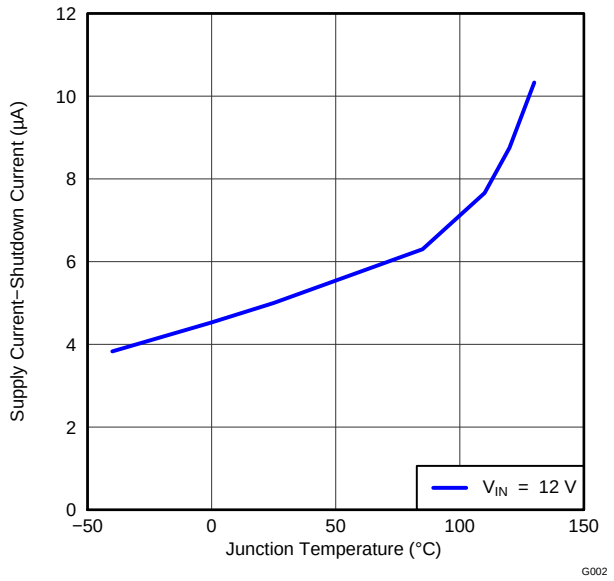

Figure 2. VIN Shutdown Current vs Junction Temperature

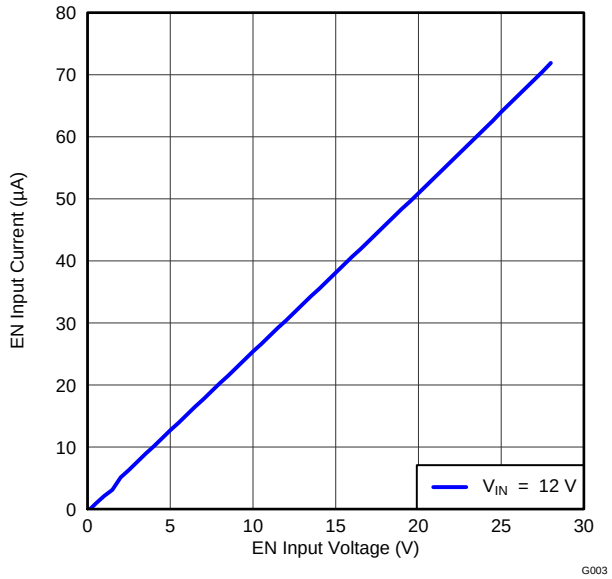

Figure 3. EN Input Current vs EN Input Voltage

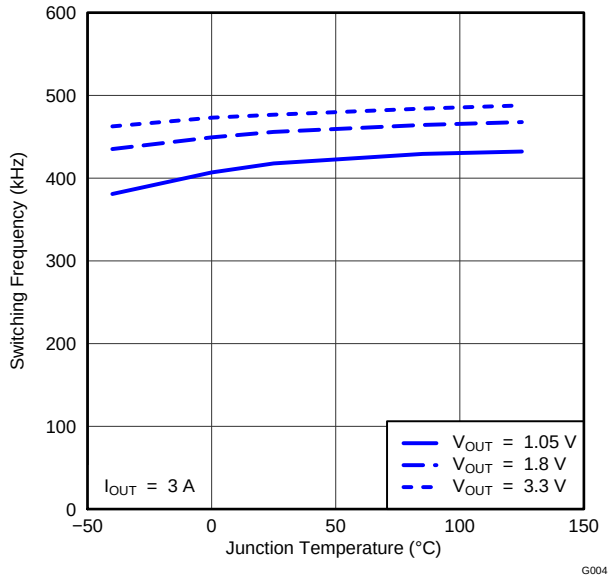

Figure 4. Switching Frequency vs Junction Temperature

Copyright © 2012–2019, Texas Instruments Incorporated

Typical Characteristics (continued)

V_{IN} = 12 V, T_A= 25°C (unless otherwise noted)

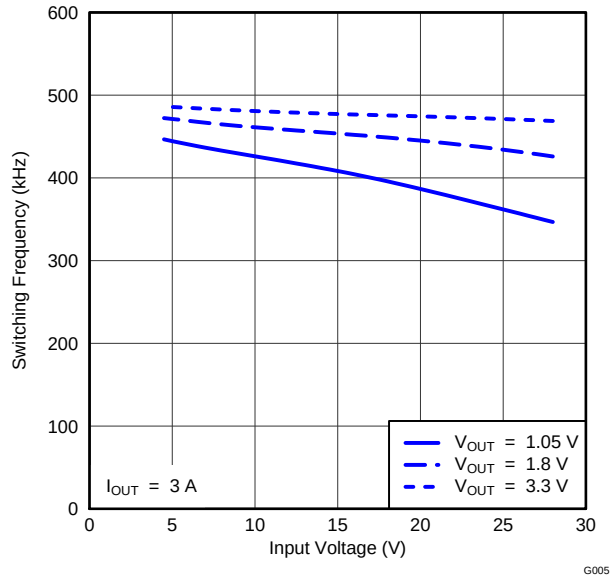

Figure 5. Switching Frequency vs Input Voltage

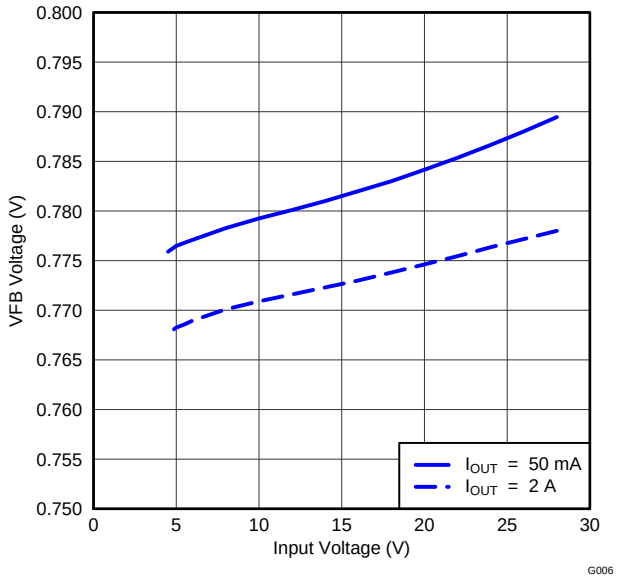

Figure 6. VFB Voltage vs Input Voltage

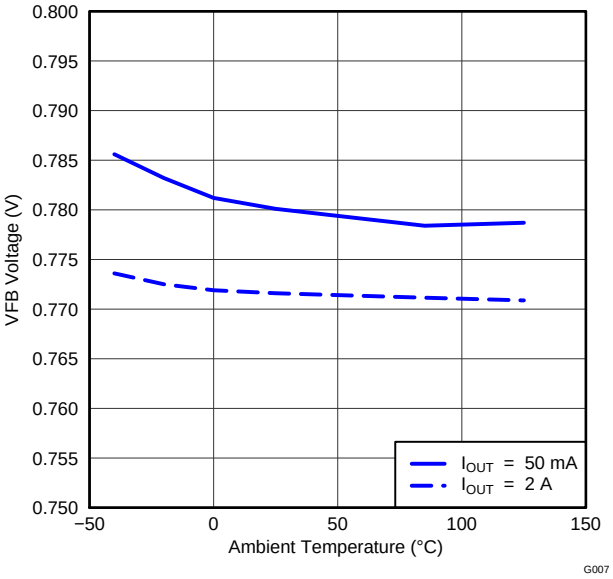

Figure 7. VFB Voltage vs Ambient Temperature

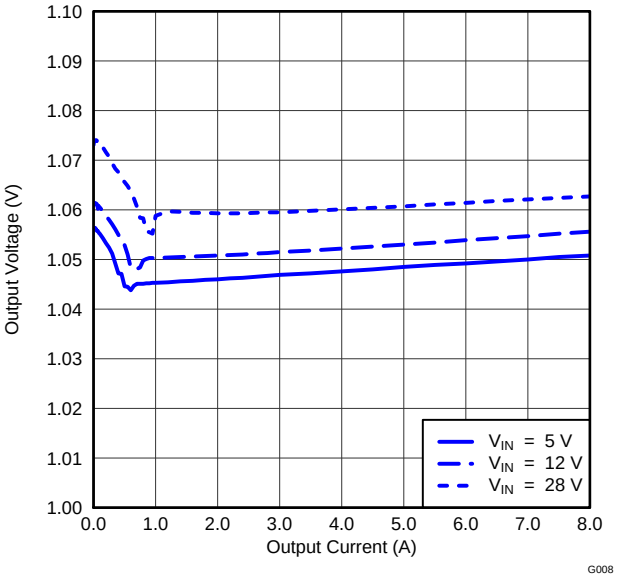

Figure 8. Load Regulation

Copyright © 2012–2019, Texas Instruments Incorporated

Typical Characteristics (continued)

V_{IN} = 12 V, T_A= 25°C (unless otherwise noted)

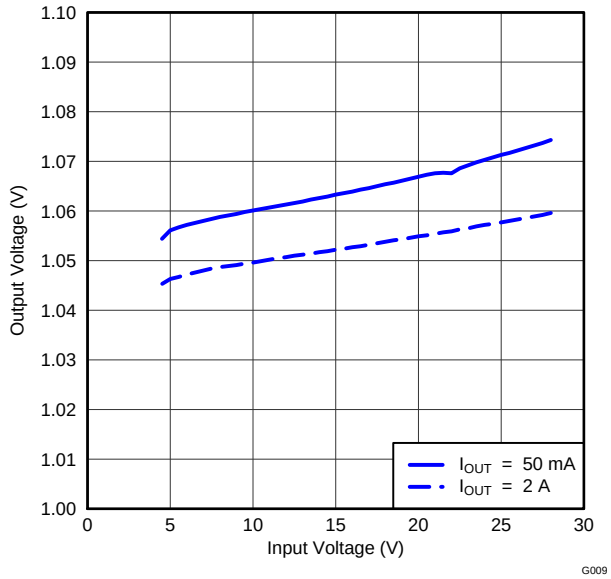

Figure 9. Line Regulation

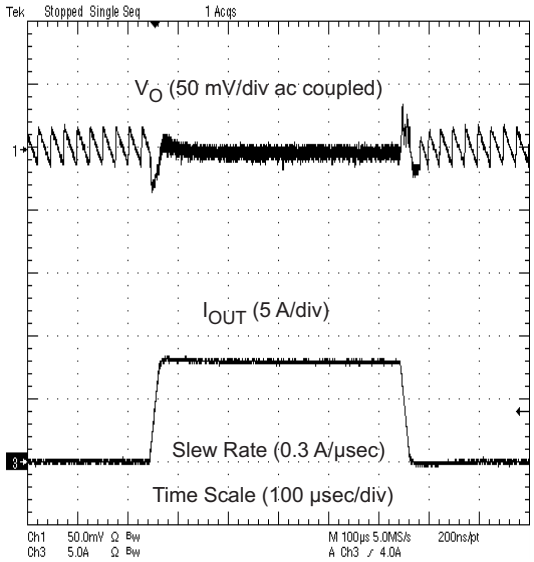

Figure 10. Transient Response

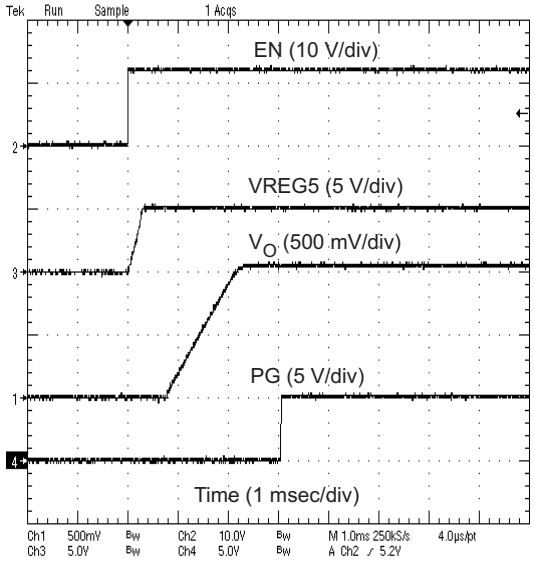

Figure 11. Start-Up Waveforms

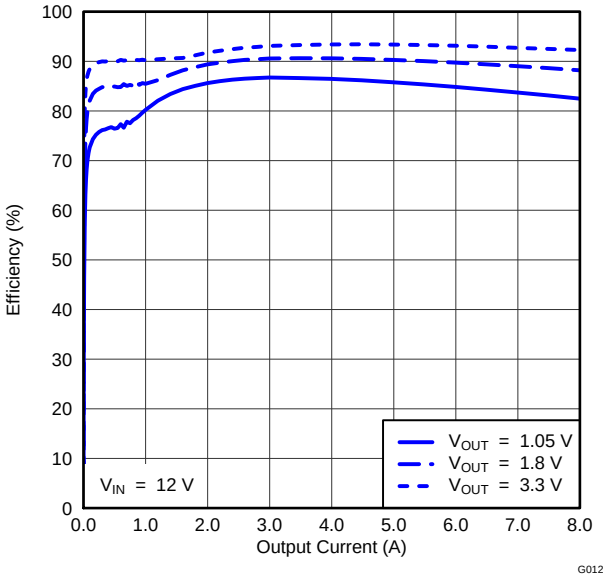

Figure 12. Efficiency vs. Output Current

Copyright © 2012–2019, Texas Instruments Incorporated

Typical Characteristics (continued)

V_{IN} = 12 V, T_A= 25°C (unless otherwise noted)

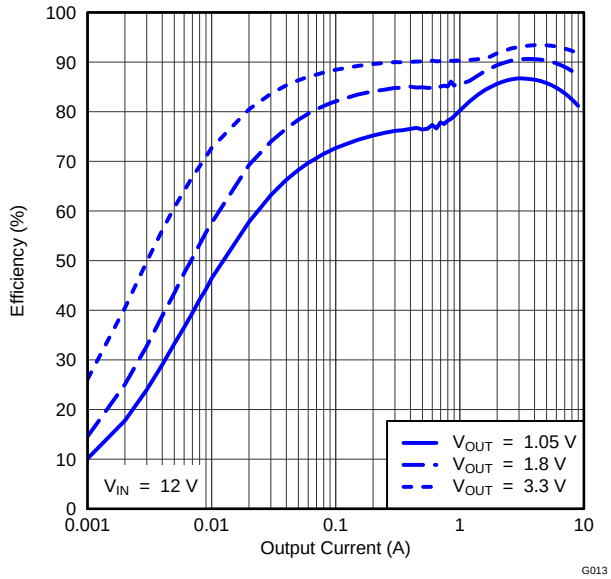

Figure 13. Light Load Efficiency vs. Output Current

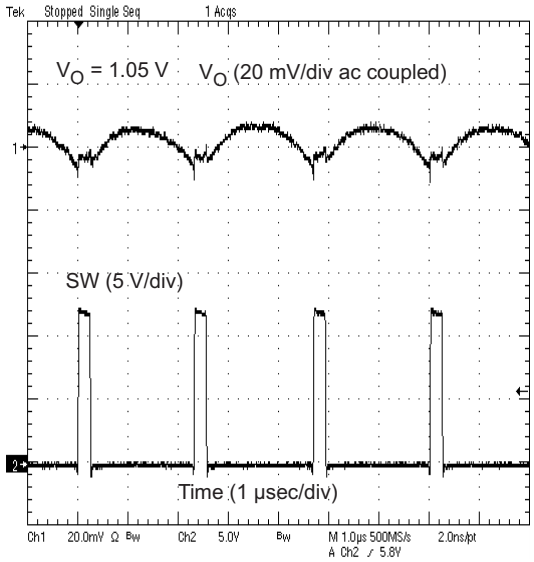

I_{OUT} = 8 A

Figure 14. Output Voltage Ripple

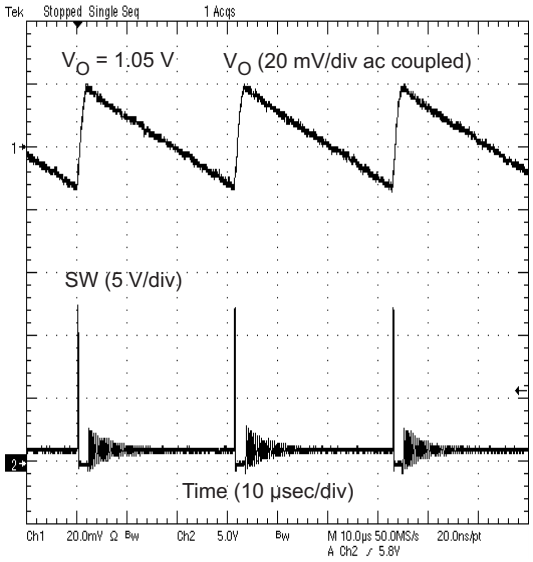

I_{OUT} = 50 mA

Figure 15. Output Voltage Ripple

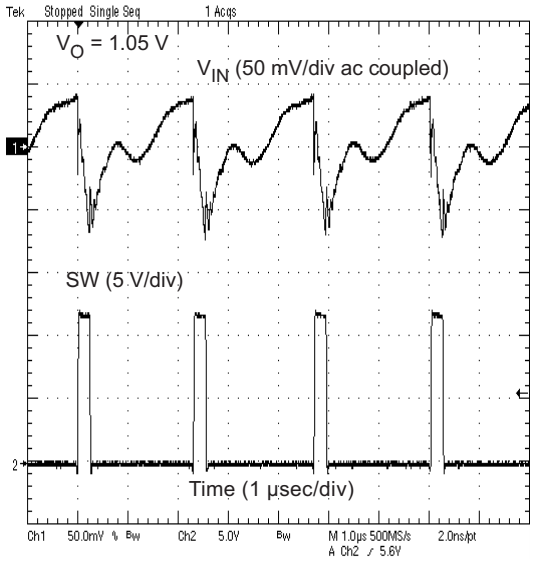

I_{OUT} = 8 A

Figure 16. Input Voltage Ripple

Typical Characteristics (continued)

V_{IN} = 12 V, T_A= 25°C (unless otherwise noted)

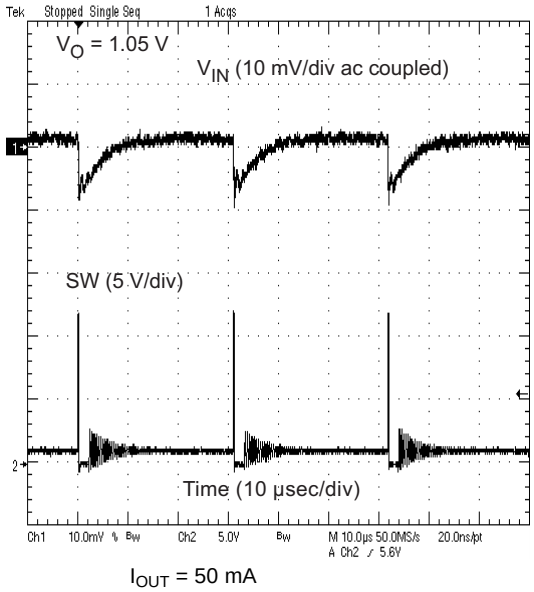

Figure 17. Input Voltage Ripple

Copyright © 2012–2019, Texas Instruments Incorporated

7 Detailed Description

7.1 Overview

The TPS53015 is single synchronous step-down buck controller. It operates using D-CAP2 mode control. The fast transient response of D-CAP2 control reduces the required amount of output capacitance to meet a specific level of performance. Proprietary internal circuitry allows the use of low-ESR output capacitors including ceramic and special polymer types.

7.2 Functional Block Diagram

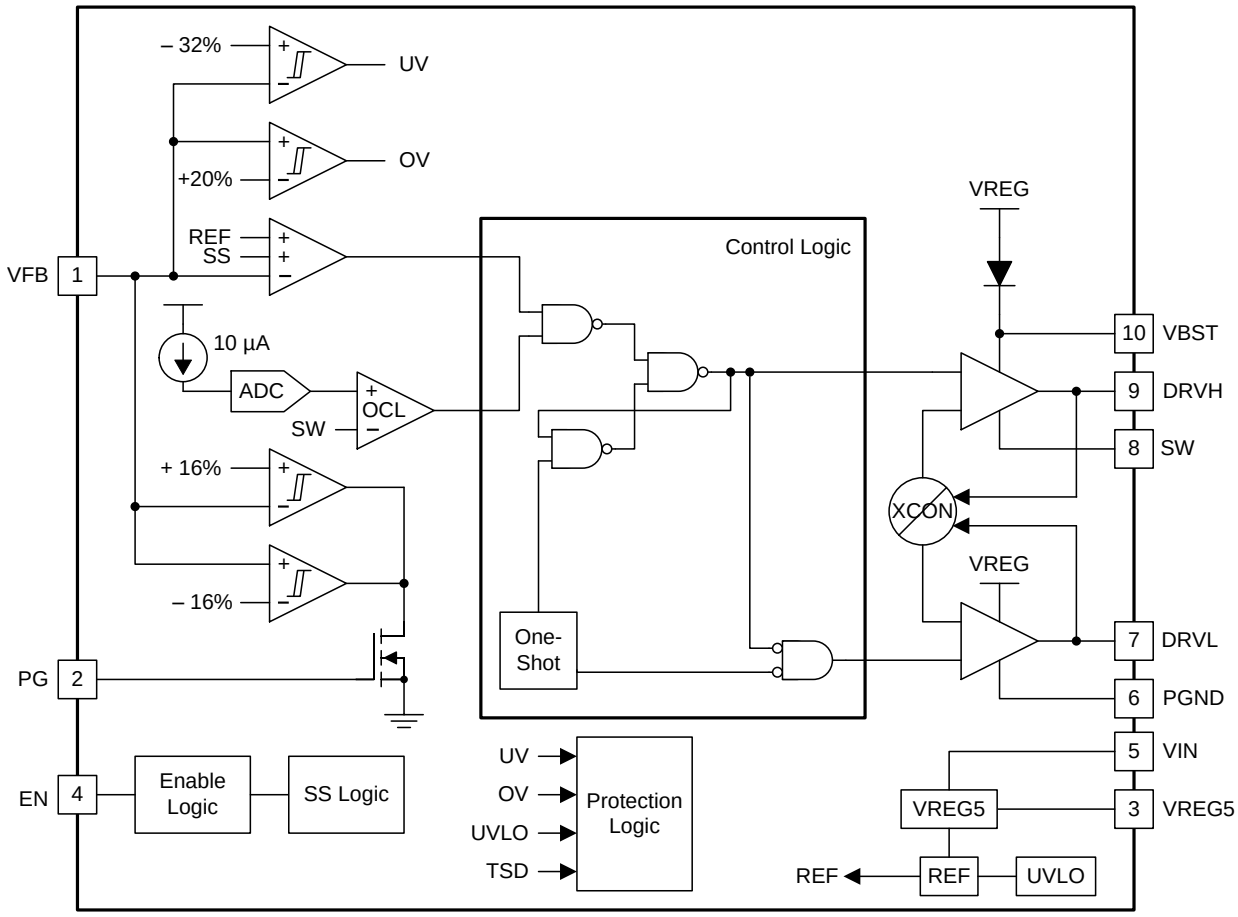

Copyright © 2016, Texas Instruments Incorporated

7.3 Feature Description

7.3.1 Drivers

The TPS53015 device contains two high-current resistive MOSFET gate drivers. The low-side driver is a PGND referenced, VREG5 powered driver designed to drive the gate of a high-current, low $R_{DS(on)}$ N-channel MOSFET whose source is connected to PGND. The high-side driver is a floating SW referenced, VBST powered driver designed to drive the gate of a high-current, low $R_{DS(on)}$ N-channel MOSFET. To maintain the VBST voltage during the high-side driver ON-time, a capacitor is placed from SW to VBST. Each driver draws average current equal to gate charge (Q_g and V_{gs} = 5 V) times switching frequency (f_{SW}). To prevent cross-conduction, there is a narrow dead-time when both high-side and low-side drivers are OFF between each driver transition. During this time the inductor current is carried by one of the MOSFETs body diodes.

Feature Description (continued)

7.3.2 5-Volt Regulator

The TPS53015 has an internal 5-V low-dropout (LDO) regulator to provide a regulated voltage for all both drivers and the device internal logic. A high-quality 4.7-µF or greater ceramic capacitor from VREG5 to GND is required to stabilize the internal regulator.

7.3.3 Soft-Start and Pre-biased Soft-Start Time

The TPS53015 operates with an internally set, 1.4-ms soft-start time. When the EN pin becomes high and the VREG5 voltage is above the UVLO threshold, an internal DAC ramps up the reference voltage to the PWM comparator. Smooth control of the output voltage is maintained during start up.

The device contains a unique circuit to prevent current from being pulled from the output during startup if the output is pre-biased. When the soft-start commands a voltage higher than the pre-bias level (internal soft-start time becomes greater than internal feedback voltage VFB), the controller slowly activates synchronous rectification by starting the first low side FET gate driver pulses with a narrow on-time. It then increments that on-time on a cycle-by-cycle basis until it coincides with the time dictated by (1-D), where D is the duty cycle of the converter. This scheme prevents the initial sinking of the pre-biased output, and ensures that the output voltage (V_{OUT}) starts and ramps up smoothly into regulation from pre-biased startup to normal mode operation.

7.3.4 Overcurrent Protection

The TPS53015 device has a cycle-by-cycle over current limit feature. The over current limits the inductor valley current by monitoring the voltage drop across the low-side MOSFET $R_{DS(on)}$ during the low-side driver on-time. If the inductor current is larger than the overcurrent limit (OCL), the device delays the start of the next switching cycle until the sensed inductor current falls below the OCL current. MOSFET $R_{DS(on)}$ current sensing is used to provide an accuracy and cost effective solution without external devices. To program the OCL, a resister should be connected between DRVL and PGND. The recommended values are given inTable 1.

Table 1. OCL Resistor Values

Resistor Value (kΩ)	V_{TRIP} (V)
6.8	0.050
11	0.087
18	0.125
27	0.174
39	0.224
56	0.274
75	0.336

Use Equation 1 to calculate I_{OCL}.

$$I_{OCL} = \left(\frac{(V_{IN} - V_{OUT})}{2 \times L \times f_{SW}} \times \frac{V_{OUT}}{V_{IN}} \right) + \frac{V_{TRIP}}{R_{DS(ON)}} \quad (1)$$

The trip voltage is set between 0.05 V to 0.336 V over all operational temperature, including the 4000ppm/°C temperature slope compensation for the temperature dependency of the $R_{DS(on)}$. If the load current exceeds the overcurrent limit, the voltage begins to drop. If the overcurrent conditions continues the output voltage falls below the undervoltage protection threshold and the device shuts down.

7.3.5 Overvoltage and Undervoltage Protection

The TPS53015 device monitors a resistor divided feedback voltage to detect an overvoltage or undervoltage condition. If the feedback voltage is higher than 120% of the reference voltage, the OVP comparator output goes high and the circuit latches the high-side MOSFET driver OFF and the low-side MOSFET driver ON.

When the feedback voltage is lower than 68% of the reference voltage, the UVP comparator output goes high and an internal UVP delay counter begins counting. After 1 ms, the device latches OFF both top and bottom MOSFET drivers. This function is enabled approximately 2.2 ms after power-on. The OVP and UVP latch off is reset when EN goes low.

Copyright © 2012–2019, Texas Instruments Incorporated

7.3.6 UVLO Protection

The TPS53015 offers undervoltage lockout protection (UVLO) by monitoring the voltage of VREG5 pin. When the VREG5 pin voltage is lower than UVLO threshold voltage, the device shuts off. All output drivers are OFF. The UVLO is non-latch protection.

7.3.7 Thermal Shutdown

During normal operation, when the temperature of the TPS53015 device exceeds the threshold value (typically 150°C), the device shuts off. When the temperature falls below the threshold, the device starts again. During VIN start-up when the VREG5 output voltage is below its nominal value, the device maintains the thermal shutdown threshold lower than 150°C. During the period where VIN rises, the junction temperature (T_J) must be maintained at lower than 110°C.

7.3.8 Power Good

The VFB pin measures the power-good output and the function activates after the soft-start period has completed. If the output voltage is within ±16% of the target voltage, the internal comparator detects the power-good state and the power-good signal becomes high after 1.2-ms delay. During start-up, this internal delay starts after 2.2 times the soft-start time to avoid a glitch of power-good signal. If the feedback voltage goes outside ±16% of target value, the power-good signal becomes low after 2-µs delay.

7.4 Device Functional Modes

7.4.1 PWM Operation

The main control loop of the TPS53015 device is an adaptive on-time pulse width modulation (PWM) controller that supports a proprietary D-CAP2 control mode. D-CAP2 control combines constant on-time control with an internal compensation circuit for pseudo-fixed frequency and low external component count configuration with both low ESR and ceramic output capacitors. It is stable even with virtually no ripple at the output. At the beginning of each cycle, the high-side MOSFET is turned on. this MOSFET is turned off when the internal timer expires. This timer is set by the converter input voltage VIN, and the output voltage (V_{OUT}) to maintain a pseudo-fixed frequency over the input voltage range, hence it is called adaptive on-time control. The timer is reset and the high-side MOSFET is turned on again when the feedback voltage falls below the nominal output voltage. An internal ramp is added to the reference voltage to simulate output ripple, eliminating the need for ESR induced output ripple from D-CAP2 mode control.

7.4.2 Auto-skip Eco-Mode Control

The TPS53015 operates in Auto-Skip Eco-mode to increase light-load efficiency. As the output current decreases from heavy load condition, the inductor current is also reduced and eventually comes to point where its rippled valley touches zero level, which is the boundary between continuous conduction and discontinuous conduction modes. The rectifying MOSFET turns off when the device detects a zero inductor current. As the load current further decreases, the converter transitions into discontinuous conduction mode. The on-time is maintained to almost half of what it was during continuous conduction mode operation because it takes longer to discharge the output capacitor with a smaller load current to the level of the reference voltage. Use Equation 2 to calculate the transition point to the light-load operation current ($I_{OX(LL)}$) using a 500-kHz switching frequency.

$$I_{OUT(LL)} = \frac{1}{2 \times L \times f_{SW}} \times \frac{(V_{IN} - V_{OUT}) \times V_{OUT}}{V_{IN}} \quad (2)$$

8 Application and Implementation

NOTE

Information in the following applications sections is not part of the TI component specification, and TI does not warrant its accuracy or completeness. TI's customers are responsible for determining suitability of components for their purposes. Customers should validate and test their design implementation to confirm system functionality.

8.1 Application Information

This design example describes a D-CAP2 mode control in a cost sensitive application. Providing a 1.05-V output at up to 8 A from a loosely regulated 12 V (8 V – 22 V) source, this design demonstrates the TPS53015 in a typical point-of-load application.

Copyright © 2012–2019, Texas Instruments Incorporated

8.2 Typical Application

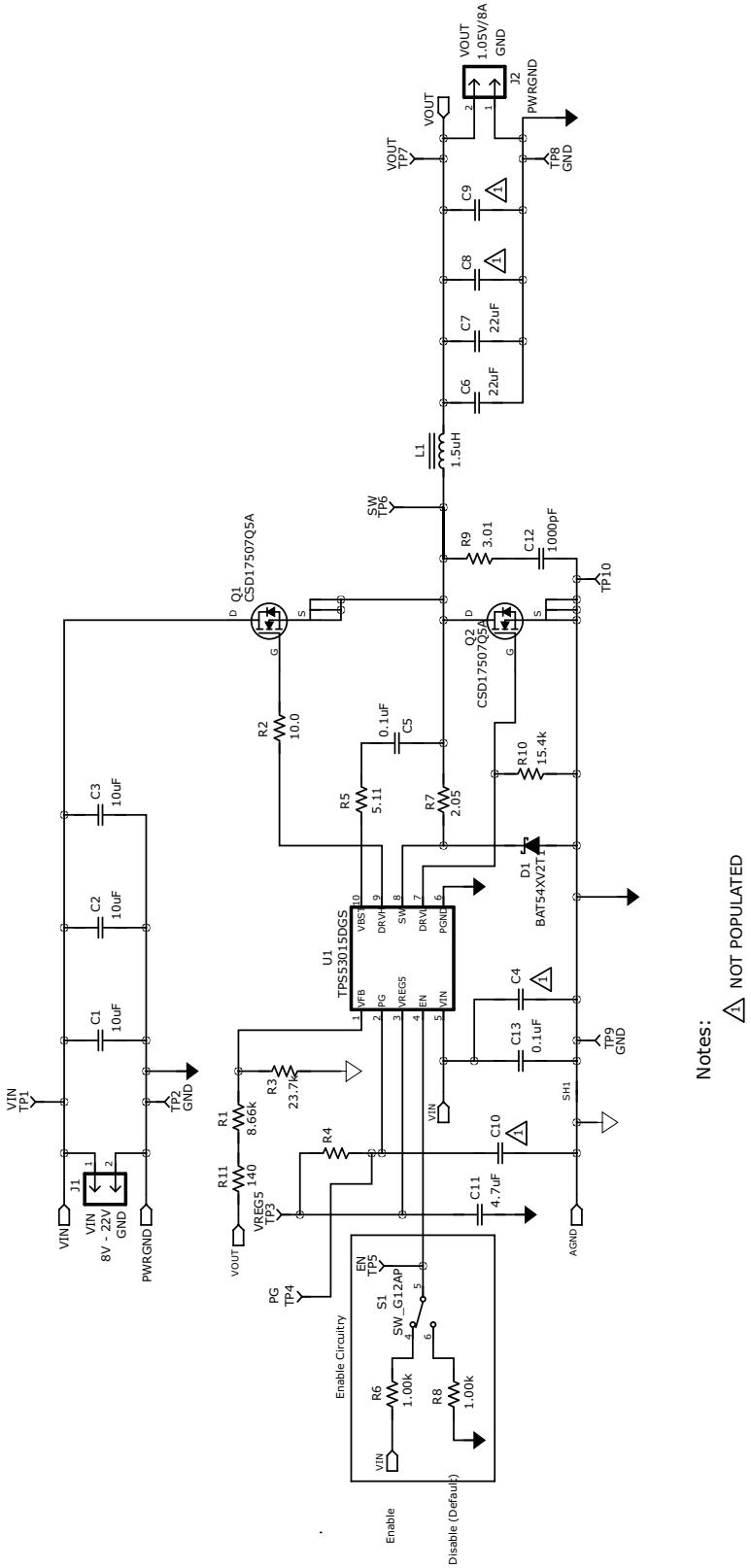

Figure 18. POL Application Using TPS53015

Typical Application (continued)

8.2.1 Design Requirements

Table 2. TPS53015 Design Requirements

PARAMETER	TEST CONDITIONS	MIN	TYP	MAX	UNITS
INPUT CHARACTERISTICS					
Voltage range		8.0	12	22	V
Maximum input current	V_{IN} = 12 V, I_{OUT} = 8 A		0.9		A
No load input current	V_{IN} = 12 V, I_{OUT} = 0 A		0.6		mA
OUTPUT CHARACTERISTICS					
Output voltage			1.05		V
Output voltage regulation	Setpoint accuracy (V_{IN} = 12 V, I_{OUT} = 8 A)	-2%		2%	
	Line regulation (V_{IN} = 8.0 V – 22 V, I_{OUT} = 8 A)		1%		
	Load regulation (V_{IN} = 12 V, I_{OUT} = 0 A – 8 A)		1.5%		
Output voltage ripple	V_{IN} = 12 V, I_{OUT} = 8 A		20		mVpp
Output load current		0		8.0	A
Overcurrent limit	V_{IN} = 12 V		11		
SYSTEMS CHARACTERISTICS					
Switching frequency			500		kHz
Peak efficiency	V_{IN} = 12 V, I_{OUT} = 3.2 A		86.5%		
Full load efficiency	V_{IN} = 12 V, I_{OUT} = 8.0 A		81.4%		
Operating temperature			25		ºC

8.2.2 Detailed Design Procedure

8.2.2.1 Determine the Inductance Value

The inductance value is selected to provide approximately 30% peak to peak ripple current at maximum load. Larger ripple current increases output ripple voltage, improve signal-to-noise ratio and contribute to stable operation. Use Equation 3 to calculate te value for L_{OUT}.

$$L_{OUT} = \frac{V_{IN(MAX)} - V_{OUT}}{I_{L(RIPPLE)} \times f_{SW}} \times \frac{V_{OUT}}{V_{IN(MAX)}} \tag{3}$$

The inductor current ratings must support both the RMS (thermal) current and the peak (saturation) current. The RMS and peak inductor current can be estimated as shown in Equation 4.

$$I_{L(RIPPLE)} = \frac{V_{IN(MAX)} - V_{OUT}}{L_{OUT} \times f_{SW}} \times \frac{V_{OUT}}{V_{IN(MAX)}} \tag{4}$$

$$I_{L(PEAK)} = \frac{V_{TRIP}}{R_{DS(ON)}} + I_{L(RIPPLE)} \tag{5}$$

$$I_{L(RMS)} = \sqrt{I_{OUT}^2 + \frac{1}{12} \times I_{L(RIPPLE)}^2} \tag{6}$$

注

公式 6 serves as a general reference. To further improve transient response, the output inductance could be reduced further but must be considered along with the selection of the output capacitor.

版权 © 2012–2019, Texas Instruments Incorporated

8.2.2.2 Output Capacitor

The capacitor value and ESR determines the amount of output voltage ripple and load transient response. Ceramic output capacitors with X5R dielectric or better are recommended.

$$C_{OUT} = \frac{I_{L(RIPPLE)}}{8 \times V_{OUT(RIPPLE)}} \times \frac{1}{f_{SW}} \tag{7}$$

$$C_{OUT} = \frac{\Delta I_{LOAD}^{2}}{2 \times V_{OUT} \times \Delta V_{OS}} \times L_{OUT}$$

where

- ΔV_{OS} is the allowable amount of overshoot voltage in load transition (8)

$$C_{OUT} = \frac{\Delta I_{LOAD}^{2}}{2 \times K \times \Delta V_{US}} \times L_{OUT}$$

where

- ΔV_{US} is the allowable amount of undershoot voltage in load transition (9)

$$K = (V_{IN} - V_{OUT}) \times \left(\frac{t_{ON}}{t_{ON} - t_{OFF(min)}} \right)$$

where

- $t_{OFF(min)}$ is the minimum off time (10)

Select the capacitance value greater than the largest value calculated from 公式 7, 公式 8 and 公式 9. The minimum recommended output capacitance is 44 μF.

8.2.2.3 Input Capacitor

The TPS53015 device requires an input decoupling capacitor and a bulk capacitor is needed depending on the application. A minimum 10-μF high-quality ceramic capacitor is recommended for the input capacitor. The capacitor voltage rating must be greater than the maximum input voltage.

8.2.2.4 Bootstrap Capacitor

The TPS53015 device requires a bootstrap capacitor from SW to VBST to provide the floating supply for the high-side drivers. A minimum 0.1-μF high-quality ceramic capacitor is recommended. The capacitor voltage rating must be greater than 10 V.

8.2.2.5 VREG5 Capacitor

The TPS53015 device requires that the VREG5 regulator is bypassed. A minimum 4.7-μF high-quality ceramic capacitor must be connected between the VREG5 and PGND for proper operation. The capacitor voltage rating should be greater than 10 V.

8.2.2.6 Choose Output Voltage Resistors

The output voltage is set with a resistor divider from output voltage node to the VFB pin. It is recommended to use 1% tolerance or better resistors. Select an R2 value between 10 kΩ and 100 kΩ and use 公式 11 to calculate R1.

$$R1 = \left(\frac{V_{OUT}}{V_{VFB}} - 1 \right) \times R2 \tag{11}$$

8.2.3 Application Curves

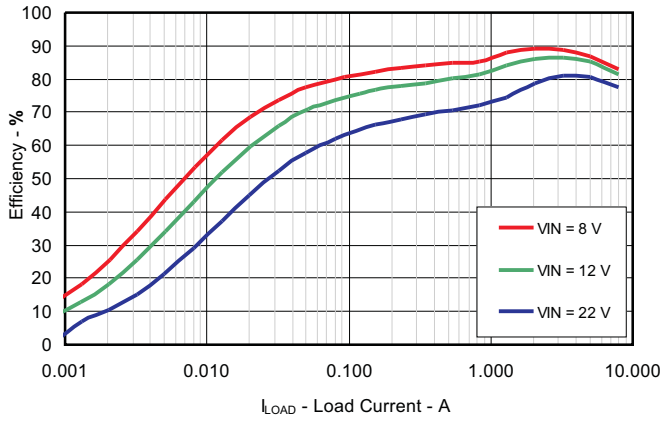

图 19. Efficiency

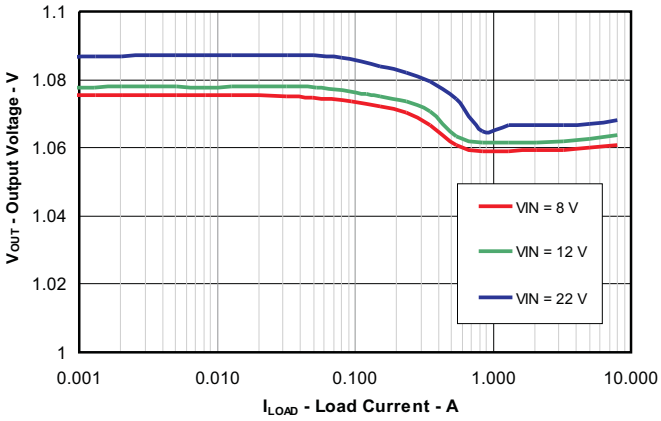

图 20. Load Regulation

注

For more performance curves, see the PWR126 EVM user guide. (SLUU944)

9 Power Supply Recommendations

The TPS53015 device operates using an input voltage supply range from 4.5 V to 28 V. This input supply must be well regulated. Proper bypassing of input supplies and internal regulators is also critical for noise performance, as is PCB layout and grounding scheme

10 Layout

10.1 Layout Guidelines

Considerations these design guidelines before beginning the application layout process.

- Design an input switching current loop as small as possible.
- Place the input capacitor close to the top switching FET.
- Design the output switching current loop as small as possible.
- The SW node must be physically small and as short as possible as to minimize parasitic capacitance and inductance and to minimize radiated emissions.
- Bring Kelvin connections from the output to the feedback pin (VFB) of the device.
- Place analog and non-switching components far away from switching components.
- Make a single point connection from the signal ground to power ground.
- Do not allow switching current to flow under the device.

版权 © 2012–2019, Texas Instruments Incorporated

10.2 Layout Example

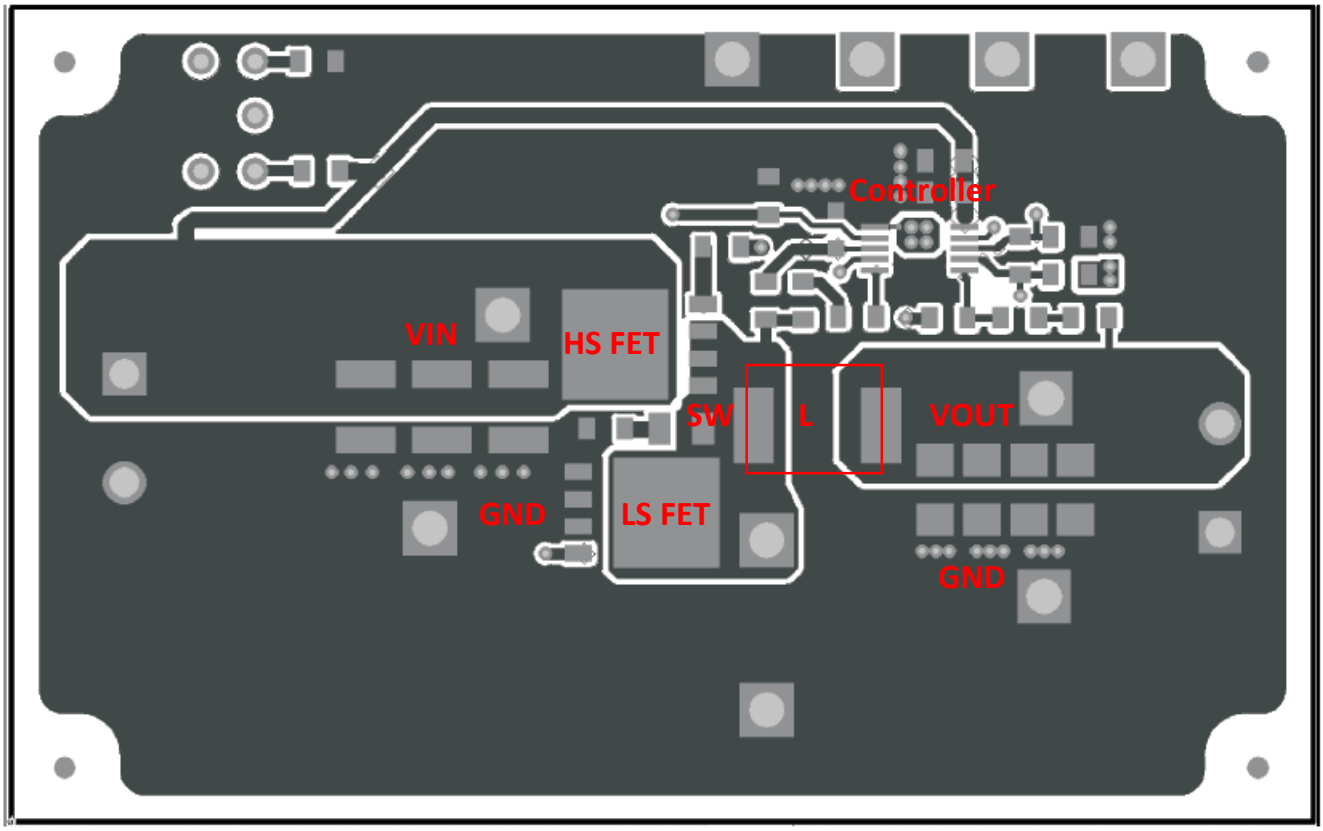

图 21. TPS53015 Layout

11 器件和文档支持

11.1 商标

D-CAP2, Eco-Mode, 轻负载下的 Eco-mode are trademarks of Texas Instruments.
All other trademarks are the property of their respective owners.

11.2 静电放电警告

这些装置包含有限的内置 ESD 保护。 存储或装卸时，应将导线一起截短或将装置放置于导电泡棉中，以防止 MOS 门极遭受静电损伤。

11.3 术语表

SLYZ022 — *TI 术语表*。

这份术语表列出并解释术语、缩写和定义。

12 机械、封装和可订购信息

以下页面包含机械、封装和可订购信息。这些信息是指定器件的最新可用数据。数据如有变更，恕不另行通知，且不会对此文档进行修订。如需获取此数据表的浏览器版本，请查阅左侧的导航栏。

版权 © 2012–2019, Texas Instruments Incorporated

PACKAGING INFORMATION

Orderable Device	Status (1)	Package Type	Package Drawing	Pins	Package Qty	Eco Plan (2)	Lead finish/ Ball material (6)	MSL Peak Temp (3)	Op Temp (°C)	Device Marking (4/5)	Samples
TPS53015DGS	ACTIVE	VSSOP	DGS	10	80	RoHS & Green	NIPDAUAG	Level-2-260C-1 YEAR	-40 to 85	53015	Samples
TPS53015DGSR	ACTIVE	VSSOP	DGS	10	2500	RoHS & Green	NIPDAUAG	Level-2-260C-1 YEAR	-40 to 85	53015	Samples

(1) The marketing status values are defined as follows:
ACTIVE: Product device recommended for new designs.
LIFEBUY: TI has announced that the device will be discontinued, and a lifetime-buy period is in effect.
NRND: Not recommended for new designs. Device is in production to support existing customers, but TI does not recommend using this part in a new design.
PREVIEW: Device has been announced but is not in production. Samples may or may not be available.
OBSOLETE: TI has discontinued the production of the device.

(2) **RoHS:** TI defines "RoHS" to mean semiconductor products that are compliant with the current EU RoHS requirements for all 10 RoHS substances, including the requirement that RoHS substance do not exceed 0.1% by weight in homogeneous materials. Where designed to be soldered at high temperatures, "RoHS" products are suitable for use in specified lead-free processes. TI may reference these types of products as "Pb-Free".
RoHS Exempt: TI defines "RoHS Exempt" to mean products that contain lead but are compliant with EU RoHS pursuant to a specific EU RoHS exemption.
Green: TI defines "Green" to mean the content of Chlorine (Cl) and Bromine (Br) based flame retardants meet JS709B low halogen requirements of <=1000ppm threshold. Antimony trioxide based flame retardants must also meet the <=1000ppm threshold requirement.

(3) MSL, Peak Temp. - The Moisture Sensitivity Level rating according to the JEDEC industry standard classifications, and peak solder temperature.

(4) There may be additional marking, which relates to the logo, the lot trace code information, or the environmental category on the device.

(5) Multiple Device Markings will be inside parentheses. Only one Device Marking contained in parentheses and separated by a "~" will appear on a device. If a line is indented then it is a continuation of the previous line and the two combined represent the entire Device Marking for that device.

(6) Lead finish/Ball material - Orderable Devices may have multiple material finish options. Finish options are separated by a vertical ruled line. Lead finish/Ball material values may wrap to two lines if the finish value exceeds the maximum column width.

Important Information and Disclaimer: The information provided on this page represents TI's knowledge and belief as of the date that it is provided. TI bases its knowledge and belief on information provided by third parties, and makes no representation or warranty as to the accuracy of such information. Efforts are underway to better integrate information from third parties. TI has taken and continues to take reasonable steps to provide representative and accurate information but may not have conducted destructive testing or chemical analysis on incoming materials and chemicals. TI and TI suppliers consider certain information to be proprietary, and thus CAS numbers and other limited information may not be available for release.

In no event shall TI's liability arising out of such information exceed the total purchase price of the TI part(s) at issue in this document sold by TI to Customer on an annual basis.

TAPE AND REEL INFORMATION

REEL DIMENSIONS

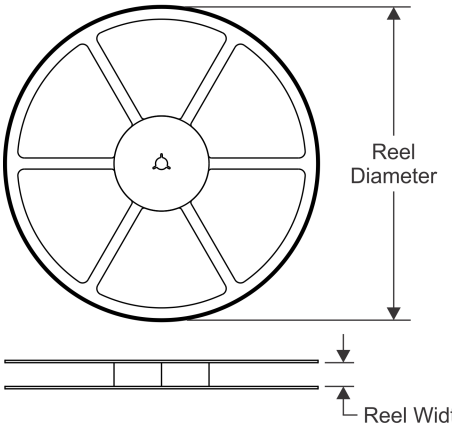

TAPE DIMENSIONS

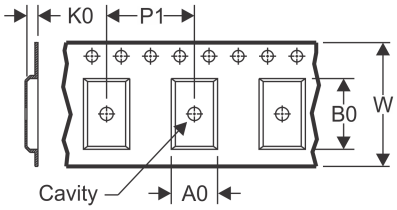

A0	Dimension designed to accommodate the component width
B0	Dimension designed to accommodate the component length
K0	Dimension designed to accommodate the component thickness
W	Overall width of the carrier tape
P1	Pitch between successive cavity centers

QUADRANT ASSIGNMENTS FOR PIN 1 ORIENTATION IN TAPE

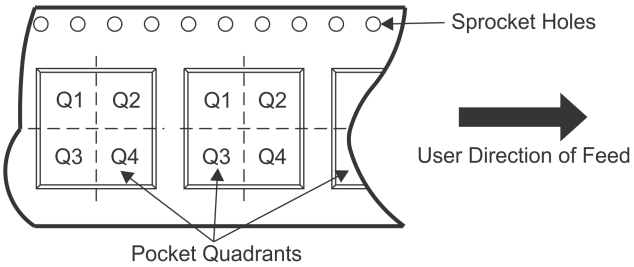

*All dimensions are nominal

Device	Package Type	Package Drawing	Pins	SPQ	Reel Diameter (mm)	Reel Width W1 (mm)	A0 (mm)	B0 (mm)	K0 (mm)	P1 (mm)	W (mm)	Pin1 Quadrant
TPS53015DGSR	VSSOP	DGS	10	2500	330.0	12.4	5.3	3.4	1.4	8.0	12.0	Q1

TAPE AND REEL BOX DIMENSIONS

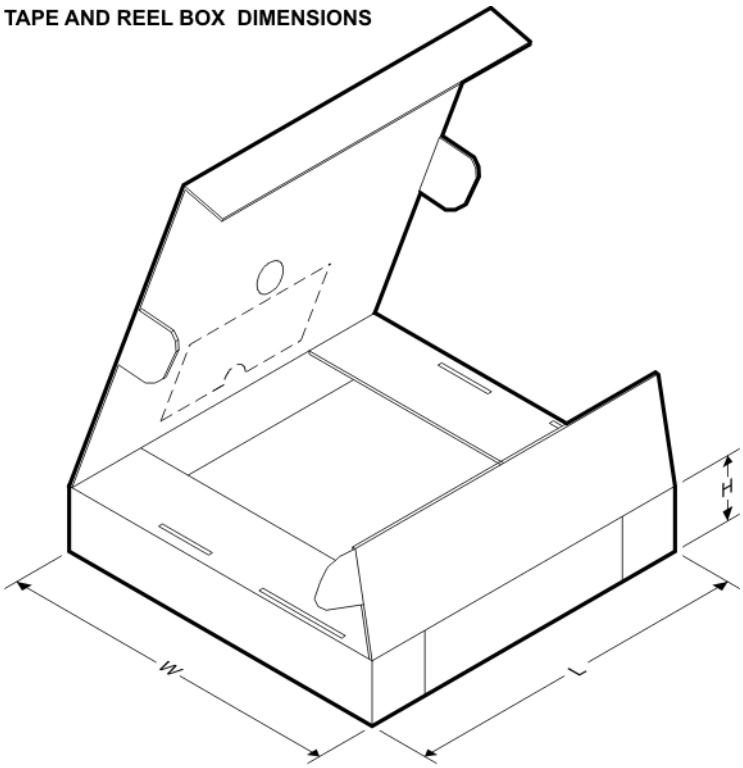

*All dimensions are nominal

Device	Package Type	Package Drawing	Pins	SPQ	Length (mm)	Width (mm)	Height (mm)
TPS53015DGSR	VSSOP	DGS	10	2500	366.0	364.0	50.0

TUBE

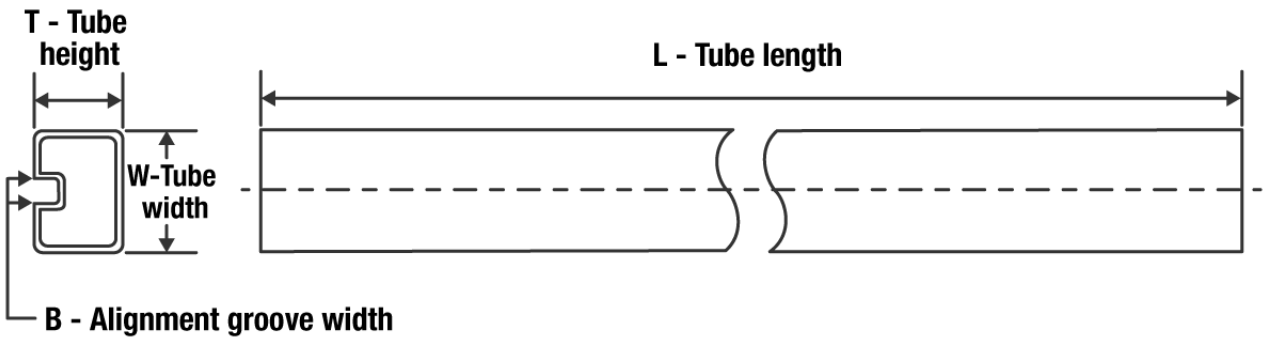

*All dimensions are nominal

Device	Package Name	Package Type	Pins	SPQ	L (mm)	W (mm)	T (µm)	B (mm)
TPS53015DGS	DGS	VSSOP	10	80	330	6.55	500	2.88

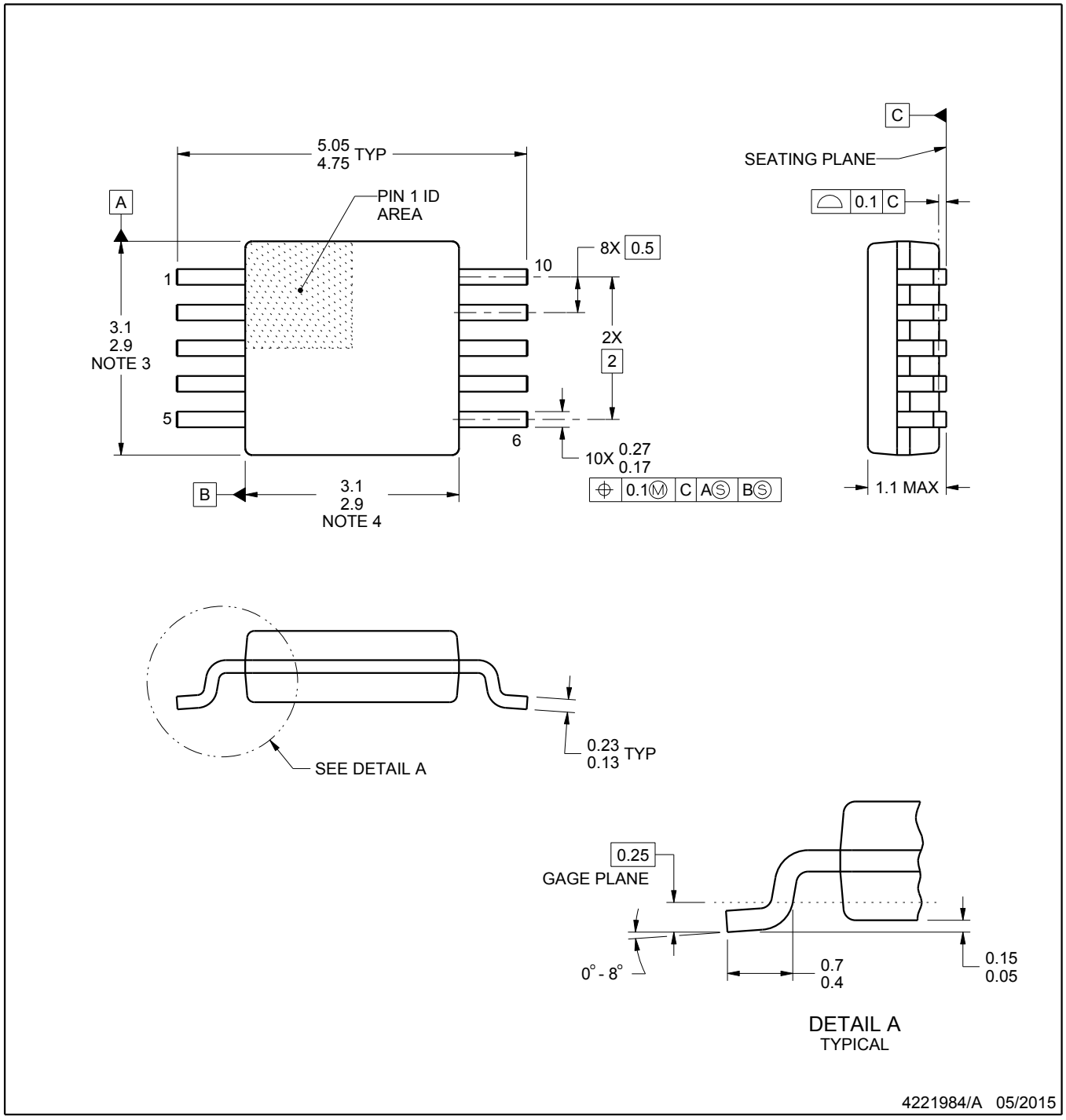

NOTES:

1. All linear dimensions are in millimeters. Any dimensions in parenthesis are for reference only. Dimensioning and tolerancing per ASME Y14.5M.
2. This drawing is subject to change without notice.
3. This dimension does not include mold flash, protrusions, or gate burrs. Mold flash, protrusions, or gate burrs shall not exceed 0.15 mm per side.
4. This dimension does not include interlead flash. Interlead flash shall not exceed 0.25 mm per side.
5. Reference JEDEC registration MO-187, variation BA.

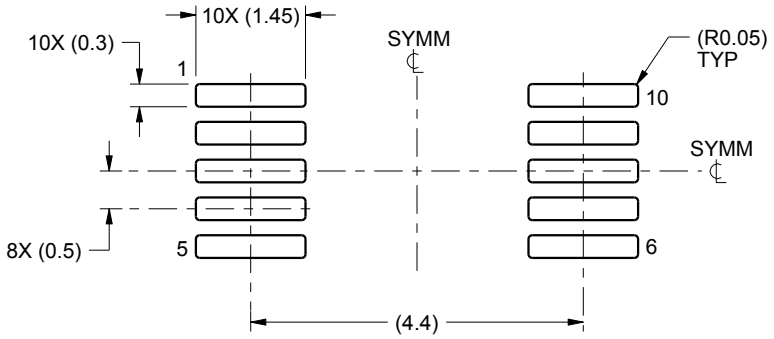

LAND PATTERN EXAMPLE
SCALE:10X

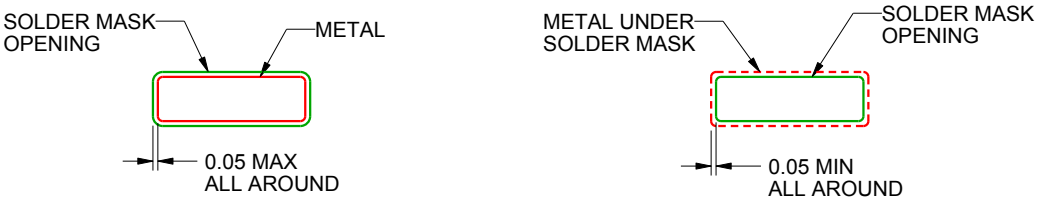

NON SOLDER MASK
DEFINED

SOLDER MASK
DEFINED

SOLDER MASK DETAILS
NOT TO SCALE

4221984/A 05/2015

NOTES: (continued)

6. Publication IPC-7351 may have alternate designs.
7. Solder mask tolerances between and around signal pads can vary based on board fabrication site.

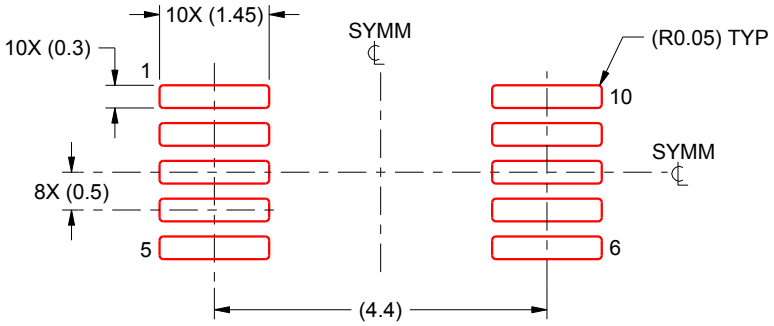

SOLDER PASTE EXAMPLE
BASED ON 0.125 mm THICK STENCIL
SCALE:10X

4221984/A 05/2015

NOTES: (continued)

8. Laser cutting apertures with trapezoidal walls and rounded corners may offer better paste release. IPC-7525 may have alternate design recommendations.
9. Board assembly site may have different recommendations for stencil design.

重要声明和免责声明

TI“按原样”提供技术和可靠性数据（包括数据表）、设计资源（包括参考设计）、应用或其他设计建议、网络工具、安全信息和其他资源，不保证没有瑕疵且不做出任何明示或暗示的担保，包括但不限于对适销性、某特定用途方面的适用性或不侵犯任何第三方知识产权的暗示担保。

这些资源可供使用 TI 产品进行设计的熟练开发人员使用。您将自行承担以下全部责任：(1) 针对您的应用选择合适的 TI 产品，(2) 设计、验证并测试您的应用，(3) 确保您的应用满足相应标准以及任何其他功能安全、信息安全、监管或其他要求。

这些资源如有变更，恕不另行通知。TI 授权您仅可将这些资源用于研发本资源所述的 TI 产品的应用。严禁对这些资源进行其他复制或展示。您无权使用任何其他 TI 知识产权或任何第三方知识产权。您应全额赔偿因在这些资源的使用中对 TI 及其代表造成的任何索赔、损害、成本、损失和债务，TI 对此概不负责。

TI 提供的产品受 TI 的销售条款或 ti.com 上其他适用条款/TI 产品随附的其他适用条款的约束。TI 提供这些资源并不会扩展或以其他方式更改 TI 针对 TI 产品发布的适用的担保或担保免责声明。

TI 反对并拒绝您可能提出的任何其他或不同的条款。

邮寄地址：Texas Instruments, Post Office Box 655303, Dallas, Texas 75265
Copyright © 2022，德州仪器 (TI) 公司